BELLSOUTH® / CLEC Agreement

Customer Name: Neutral Tandem-Florida and Neutral Tandem-Georgia, LLC

Neutral Tandem Florida-Georgia, LLC	2
Table of Contents	3
General Terms and Conditions	5
Signature Page	24
Attachment 1 - Resale	25
Att 1 - Resale Discounts & Rates	49
Att 2 - Network Elements and Other Services	51
Att 2 - Network Elements & Other Services Rates	83
Att 3 - Network Interconnection	99
Att 3- Network Interconnection Rates	132
Att 4 - Collocation - Central Office	134
Att 4 - Collocation - Remote Site	191
Att 4 - Collocation Rates.xls	231
Att 5 - Access to Numbers and Number Portability	242
Att 6 - Ordering	248
Att 7 - Billing	257
Att 7 - CMDS Rates	271
Att 8 - Rights of Way	273
Att 9 - Perf Meas Intro	275
Att 9 - Performance Measurements	277
Att 10 - Disaster Recovery Plan	489
Att 11 - BFR and NBR Process	498
Neutral Tandem-GA UNE Rate Remand1	505
Neutral Tandem-Florida and Neutral Tandem-Georgia Addition of Neutral Tandem - SC and Neutral Tandem - TN	524

Note: This page is not part of the actual signed contract/amendment, but is present for record keeping purposes only.

Interconnection Agreement

Between

BellSouth Telecommunications, Inc.

and

Neutral Tandem-Florida and Neutral Tandem-Georgia, LLC

TABLE OF CONTENTS

General Terms and Conditions

Definitions
1. CLEC Certification
2. Term of the Agreement
3. Nondiscriminatory Access .
4. Court Ordered Requests for Call Detail Records and Other Subscriber Information
5. Liability and Indemnification
6. Intellectual Property Rights and Indemnification
7. Proprietary and Confidential Information
8. Resolution of Disputes
9. Taxes
10. Force Majeure
11. Adoption of Agreements
12. Modification of Agreement
13. Legal Rights
14. Indivisibility
15. Severability
16. Non-Waivers
17. Governing Law
18. Assignments and Transfers
19. Notices
20. Rule of Construction
21. Headings of No Force or Effect
22. Multiple Counterparts
23. Filing of Agreement
24. Compliance with Law
25. Necessary Approvals
26. Good Faith Performance
27. Rates
28. Rate True-Up
29. Survival
30. Entire Agreement

TABLE OF CONTENTS (cont'd)

Attachment 1 - Resale

Attachment 2 - Network Elements and Other Services

Attachment 3 - Network Interconnection

Attachment 4 - Physical Collocation – Central Office

Attachment 4 - Physical Collocation – Remote Site

Attachment 5 - Access to Numbers and Number Portability

Attachment 6 – Pre-Ordering, Ordering, Provisioning and Maintenance and Repair

Attachment 7 - Billing

Attachment 8 - Rights-of-Way, Conduits and Pole Attachments

Attachment 9 - Performance Measurements

Attachment 10- BellSouth Disaster Recovery Plan

Attachment 11–Bona Fide Request and New Business Request Process

AGREEMENT
GENERAL TERMS AND CONDITIONS

THIS AGREEMENT is made by and between BellSouth Telecommunications, Inc., (BellSouth), a Georgia corporation, and Neutral Tandem-Florida, LLC, and Neutral Tandem-Georgia, LLC, Collectively (Neutral Tandem), a Delaware corporation, and shall be effective on the Effective Date, as defined herein. This Agreement may refer to either BellSouth or Neutral Tandem or both as a "Party" or "Parties."

W I T N E S S E T H

WHEREAS, BellSouth is a local exchange telecommunications company authorized to provide Telecommunications Services (as defined below) in the states of Alabama, Florida, Georgia, Kentucky, Louisiana, Mississippi, North Carolina, South Carolina and Tennessee; and

WHEREAS, Neutral Tandem is or seeks to become a CLEC authorized to provide telecommunications services in the states of Florida, and Georgia, and

WHEREAS, pursuant to Sections 251 and 252 of the Act; Neutral Tandem wishes to purchase certain services from BellSouth; and

WHEREAS, Parties wish to interconnect their facilities, exchange traffic, and perform Local Number Portability ("LNP") pursuant to Sections 251 and 252 of the Act as set forth herein; and

NOW THEREFORE, in consideration of the mutual agreements contained herein, BellSouth and Neutral Tandem agree as follows:

Definitions

Affiliate is defined as a person that (directly or indirectly) owns or controls, is owned or controlled by, or is under common ownership or control with, another person. For purposes of this paragraph, the term "own" means to own an equity interest (or equivalent thereof) of more than 10 percent.

Commission is defined as the appropriate regulatory agency in each state of BellSouth's nine-state region (Alabama, Florida, Georgia, Kentucky, Louisiana, Mississippi, North Carolina, South Carolina, and Tennessee).

Competitive Local Exchange Carrier (CLEC) means a telephone company certificated by the Commission to provide local exchange service within BellSouth's franchised area.

Effective Date is defined as the date that the Agreement is effective for purposes of rates, terms and conditions and shall be thirty (30) days after the date of the last signature executing the Agreement. Future amendments for rate changes will also be effective thirty (30) days after the date of the last signature executing the amendment.

End User means the ultimate user of the Telecommunications Service.

FCC means the Federal Communications Commission.

Telecommunications means the transmission, between or among points specified by the user, of information of the user's choosing, without change in the form or content of the information as sent and received.

Telecommunications Service means the offering of telecommunications for a fee directly to the public, or to such classes of users as to be effectively available directly to the public, regardless of the facilities used.

Telecommunications Act of 1996 (Act) means Public Law 104-104 of the United States Congress effective February 8, 1996. The Act amended the Communications Act of 1934 (47 U.S.C. Section 1 et. seq.).

1. CLEC Certification

1.1 Neutral Tandem agrees to provide BellSouth in writing Neutral Tandem's CLEC certification for all states covered by this Agreement except Kentucky prior to BellSouth filing this Agreement with the appropriate Commission for approval.

1.2 To the extent Neutral Tandem is not certified as a CLEC in each state covered by this Agreement as of the execution hereof, Neutral Tandem may not purchase services hereunder in that state. Neutral Tandem will notify BellSouth in writing and provide CLEC certification when it becomes certified to operate in any other state covered by this Agreement and upon receipt thereof, Neutral Tandem may thereafter purchase services pursuant to this Agreement in that state. BellSouth will file this Agreement with the appropriate Commission for approval.

1.3 Should Neutral Tandem's certification in any state be rescinded or otherwise terminated, BellSouth may, at its election, terminate this Agreement immediately and all monies owed on all outstanding invoices shall become due, and BellSouth may refuse to provide services hereunder in that state until certification is reinstated in that state, provided such notification is made prior to expiration of the initial term of this Agreement. Neutral Tandem shall provide an effective certification to do business issued by the secretary of state or equivalent authority in each state covered by this Agreement.

2. Term of the Agreement

2.1 The initial term of this Agreement shall be three years, beginning on the Effective Date and shall apply to the BellSouth territory in the state(s) of Florida, and Georgia. Notwithstanding any prior agreement of the Parties, the rates, terms and conditions of this Agreement shall not be applied retroactively prior to the Effective Date.

2.2 The Parties agree that by no earlier than two hundred seventy (270) days and no later than one hundred and eighty (180) days prior to the expiration of the initial term of this Agreement, they shall commence negotiations for a new agreement to be effective beginning on the expiration date of this Agreement (Subsequent Agreement). If as of the expiration of the initial term of this Agreement, a Subsequent Agreement has not been executed by the Parties, then except as set forth in Sections 2.3.1 and 2.3.2 below, this Agreement shall continue on a month-to-month basis while a Subsequent Agreement is being negotiated. The Parties' rights and obligations with respect to this Agreement after expiration of the initial term shall be as set forth in Section 2.3 below.

2.3 If, within one hundred and thirty-five (135) days of commencing the negotiation referred to in Section 2.2 above, the Parties are unable to negotiate new terms, conditions and prices for a Subsequent Agreement, either Party may petition the Commission to establish appropriate rates, terms and conditions for the Subsequent Agreement pursuant to 47 U.S.C. 252.

2.3.1 Neutral Tandem may request termination of this Agreement only if it is no longer purchasing services pursuant to this Agreement. Except as set forth in Section 2.3.2 below, notwithstanding the foregoing, in the event that as of the date of expiration of the initial term of this Agreement and conversion of this Agreement to a month-to-month term, the Parties have not entered into a Subsequent Agreement and no arbitration proceeding has been filed in accordance with 2.3 above, then BellSouth may terminate this Agreement upon sixty (60) days notice to Neutral Tandem. In the event that BellSouth terminates this Agreement as provided above, BellSouth shall continue to offer services to Neutral Tandem pursuant to the rates, terms and conditions set forth in BellSouth's then current standard interconnection agreement. In the event that BellSouth's standard interconnection agreement becomes effective between the Parties, the Parties may continue to negotiate a Subsequent Agreement.

2.3.2 Notwithstanding Section 2.3 above, in the event that as of the expiration of the initial term of this Agreement the Parties have not entered into a Subsequent Agreement and no arbitration proceeding has been filed in accordance with Section 2.2 above and BellSouth is not providing any services under this Agreement as of the date of expiration of the initial term of this Agreement, then this Agreement shall not continue on a month to month basis but shall be deemed terminated as of the expiration date hereof.

2.4 In addition to as otherwise set forth in this Agreement, BellSouth reserves the right to suspend access to ordering systems, refuse to process additional or pending

applications for service, or terminate service in the event of prohibited, unlawful or improper use of BellSouth's facilities or service, abuse of BellSouth's facilities or any other material breach of this Agreement, and all monies owed on all outstanding invoices shall become due.

2.5 If, at any time during the term of this Agreement, BellSouth is unable to contact Neutral Tandem pursuant to the Notices provision hereof or any other contact information provided by Neutral Tandem under this Agreement, and there are no active services being provisioned under this Agreement, then BellSouth may, at its discretion, terminate this Agreement, without any liability whatsoever, upon sending of notification to Neutral Tandem pursuant to the Notices section hereof.

3. Nondiscriminatory Access

When Neutral Tandem purchases Telecommunications Services from BellSouth pursuant to Attachment 1 of this Agreement for the purposes of resale to End Users, such services shall be equal in quality, subject to the same conditions, and provided within the same provisioning time intervals that BellSouth provides to others, including its End Users. To the extent technically feasible, the quality of a Network Element, as well as the quality of the access to such Network Element provided by BellSouth to Neutral Tandem shall be at least equal to that which BellSouth provides to itself and shall be the same for all Telecommunications carriers requesting access to that Network Element. The quality of the interconnection between the network of BellSouth and the network of Neutral Tandem shall be at a level that is equal to that which BellSouth provides itself, a subsidiary, an Affiliate, or any other party. The interconnection facilities shall be designed to meet the same technical criteria and service standards that are used within BellSouth's network and shall extend to a consideration of service quality as perceived by BellSouth's End Users and service quality as perceived by Neutral Tandem.

4 Court Ordered Requests for Call Detail Records and Other Subscriber Information

4.1 Subpoenas Directed to BellSouth. Where BellSouth provides resold services for Neutral Tandem, or, if applicable under this Agreement, switching, BellSouth shall respond to subpoenas and court ordered requests delivered directly to BellSouth for the purpose of providing call detail records when the targeted telephone numbers belong to Neutral Tandem End Users. Billing for such requests will be generated by BellSouth and directed to the law enforcement agency initiating the request. BellSouth shall maintain such information for Neutral Tandem End Users for the same length of time it maintains such information for its own End Users.

4.2 Subpoenas Directed to Neutral Tandem. Where BellSouth is providing resold services to Neutral Tandem, or, if applicable under this Agreement, switching, then Neutral Tandem agrees that in those cases where Neutral Tandem receives subpoenas or court ordered requests regarding targeted telephone numbers belonging to Neutral Tandem End Users, and where Neutral Tandem does not

have the requested information, Neutral Tandem will advise the law enforcement agency initiating the request to redirect the subpoena or court ordered request to BellSouth for handling in accordance with 4.1 above.

4.3 In all other instances, where either Party receives a request for information involving the other Party's End User, the Party receiving the request will advise the law enforcement agency initiating the request to redirect such request to the other Party.

5 Liability and Indemnification

5.1 Neutral Tandem Liability. In the event that Neutral Tandem consists of two (2) or more separate entities as set forth in this Agreement and/or any Amendments hereto, or any third party places orders under this Agreement using Neutral Tandem's company codes or identifiers, all such entities shall be jointly and severally liable for the obligations of Neutral Tandem under this Agreement.

5.2 Liability for Acts or Omissions of Third Parties. BellSouth shall not be liable to Neutral Tandem for any act or omission of another entity providing any services to Neutral Tandem.

5.3 Limitation of Liability. Except for any indemnification obligations of the Parties hereunder, each Party's liability to the other for any loss, cost, claim, injury, liability or expense, including reasonable attorneys' fees relating to or arising out of any cause whatsoever, whether based in contract, negligence or other tort, strict liability or otherwise, relating to the performance of this Agreement, shall not exceed a credit for the actual cost of the services or functions not performed or improperly performed. Any amounts paid to Neutral Tandem pursuant to Attachment 9 hereof shall be credited against any damages otherwise payable to Neutral Tandem pursuant to this Agreement.

5.3.1 Limitations in Tariffs. A Party may, in its sole discretion, provide in its tariffs and contracts with its End Users and third parties that relate to any service, product or function provided or contemplated under this Agreement, that to the maximum extent permitted by Applicable Law, such Party shall not be liable to the End User or third party for (i) any loss relating to or arising out of this Agreement, whether in contract, tort or otherwise, that exceeds the amount such Party would have charged that applicable person for the service, product or function that gave rise to such loss and (ii) consequential damages. To the extent that a Party elects not to place in its tariffs or contracts such limitations of liability, and the other Party incurs a loss as a result thereof, such Party shall, except to the extent caused by the other Party's gross negligence or willful misconduct, indemnify and reimburse the other Party for that portion of the loss that would have been limited had the first Party included in its tariffs and contracts the limitations of liability that such other Party included in its own tariffs at the time of such loss.

5.3.2 Neither BellSouth nor Neutral Tandem shall be liable for damages to the other Party's terminal location, equipment or End User premises resulting from the furnishing of a service, including, but not limited to, the installation and removal of equipment or associated wiring, except to the extent caused by a Party's negligence or willful misconduct or by a Party's failure to ground properly a local loop after disconnection.

5.3.3 Under no circumstance shall a Party be responsible or liable for indirect, incidental, or consequential damages, including, but not limited to, economic loss or lost business or profits, damages arising from the use or performance of equipment or software, or the loss of use of software or equipment, or accessories attached thereto, delay, error, or loss of data. In connection with this limitation of liability, each Party recognizes that the other Party may, from time to time, provide advice, make recommendations, or supply other analyses related to the services or facilities described in this Agreement, and, while each Party shall use diligent efforts in this regard, the Parties acknowledge and agree that this limitation of liability shall apply to provision of such advice, recommendations, and analyses.

5.3.4 To the extent any specific provision of this Agreement purports to impose liability, or limitation of liability, on either Party different from or in conflict with the liability or limitation of liability set forth in this Section, then with respect to any facts or circumstances covered by such specific provisions, the liability or limitation of liability contained in such specific provision shall apply.

5.4 Indemnification for Certain Claims. Except to the extent caused by the indemnified Party's gross negligence or willful misconduct, the Party providing services hereunder, its Affiliates and its parent company, shall be indemnified, defended and held harmless by the Party receiving services hereunder against any claim, loss or damage arising from the receiving Party's use of the services provided under this Agreement pertaining to (1) claims for libel, slander or invasion of privacy arising from the content of the receiving Party's own communications, or (2) any claim, loss or damage claimed by the End User of the Party receiving services arising from such company's use or reliance on the providing Party's services, actions, duties, or obligations arising out of this Agreement.

5.5 Disclaimer. EXCEPT AS SPECIFICALLY PROVIDED TO THE CONTRARY IN THIS AGREEMENT, NEITHER PARTY MAKES ANY REPRESENTATIONS OR WARRANTIES TO THE OTHER PARTY CONCERNING THE SPECIFIC QUALITY OF ANY SERVICES, OR FACILITIES PROVIDED UNDER THIS AGREEMENT. THE PARTIES DISCLAIM, WITHOUT LIMITATION, ANY WARRANTY OR GUARANTEE OF MERCHANTABILITY OR FITNESS FOR A PARTICULAR PURPOSE, ARISING FROM COURSE OF PERFORMANCE, COURSE OF DEALING, OR FROM USAGES OF TRADE.

6 Intellectual Property Rights and Indemnification

6.1 No License. Except as expressly set forth in Section 6.2, no patent, copyright, trademark or other proprietary right is licensed, granted or otherwise transferred by this Agreement. The Parties are strictly prohibited from any use, including but not limited to, in the selling, marketing, promoting or advertising of telecommunications services, of any name, service mark, logo or trademark (collectively, the "Marks") of the other Party. The Marks include those Marks owned directly by a Party or its Affiliate(s) and those Marks that a Party has a legal and valid license to use. The Parties acknowledge that they are separate and distinct and that each provides a separate and distinct service and agree that neither Party may, expressly or impliedly, state, advertise or market that it is or offers the same service as the other Party or engage in any other activity that may result in a likelihood of confusion between its own service and the service of the other Party.

6.2 Ownership of Intellectual Property. Any intellectual property that originates from or is developed by a Party shall remain the exclusive property of that Party. Except for a limited, non-assignable, non-exclusive, non-transferable license to use patents or copyrights to the extent necessary for the Parties to use any facilities or equipment (including software) or to receive any service solely as provided under this Agreement, no license in patent, copyright, trademark or trade secret, or other proprietary or intellectual property right, now or hereafter owned, controlled or licensable by a Party, is granted to the other Party. Neither shall it be implied nor arise by estoppel. Any trademark, copyright or other proprietary notices appearing in association with the use of any facilities or equipment (including software) shall remain on the documentation, material, product, service, equipment or software. It is the responsibility of each Party to ensure at no additional cost to the other Party that it has obtained any necessary licenses in relation to intellectual property of third Parties used in its network that may be required to enable the other Party to use any facilities or equipment (including software), to receive any service, or to perform its respective obligations under this Agreement.

6.3 Intellectual Property Remedies

6.3.1 Indemnification. The Party providing a service pursuant to this Agreement will defend the Party receiving such service or data provided as a result of such service against claims of infringement arising solely from the use by the receiving Party of such service in the manner contemplated under this Agreement and will indemnify the receiving Party for any damages awarded based solely on such claims in accordance with Section 5 preceding.

6.3.2 Claim of Infringement. In the event that use of any facilities or equipment (including software), becomes, or in the reasonable judgment of the Party who owns the affected network is likely to become, the subject of a claim, action, suit, or proceeding based on intellectual property infringement, then said Party, promptly and at its sole expense and sole option, but subject to the limitations of liability set forth below, shall:

6.3.2.1 modify or replace the applicable facilities or equipment (including software) while maintaining form and function, or

6.3.2.2 obtain a license sufficient to allow such use to continue.

6.3.2.3 In the event Section 6.3.2.1 or 6.3.2.2 are commercially unreasonable, then said Party may terminate, upon reasonable notice, this contract with respect to use of, or services provided through use of, the affected facilities or equipment (including software), but solely to the extent required to avoid the infringement claim.

6.3.3 Exception to Obligations. Neither Party's obligations under this Section shall apply to the extent the infringement is caused by: (i) modification of the facilities or equipment (including software) by the indemnitee; (ii) use by the indemnitee of the facilities or equipment (including software) in combination with equipment or facilities (including software) not provided or authorized by the indemnitor, provided the facilities or equipment (including software) would not be infringing if used alone; (iii) conformance to specifications of the indemnitee which would necessarily result in infringement; or (iv) continued use by the indemnitee of the affected facilities or equipment (including software) after being placed on notice to discontinue use as set forth herein.

6.3.4 Exclusive Remedy. The foregoing shall constitute the Parties' sole and exclusive remedies and obligations with respect to a third party claim of intellectual property infringement arising out of the conduct of business under this Agreement.

6.3.5 Dispute Resolution. Any claim arising under Section 6.1 and 6.2 shall be excluded from the dispute resolution procedures set forth in Section 8 and shall be brought in a court of competent jurisdiction.

7 Proprietary and Confidential Information

7.1 Proprietary and Confidential Information. It may be necessary for BellSouth and Neutral Tandem, each as the “Discloser,” to provide to the other Party, as “Recipient,” certain proprietary and confidential information (including trade secret information) including but not limited to technical, financial, marketing, staffing and business plans and information, strategic information, proposals, request for proposals, specifications, drawings, maps, prices, costs, costing methodologies, procedures, processes, business systems, software programs, techniques, customer account data, call detail records and like information (collectively the “Information”). All such Information conveyed in writing or other tangible form shall be clearly marked with a confidential or proprietary legend. Information conveyed orally by the Discloser to Recipient shall be designated as proprietary and confidential at the time of such oral conveyance, shall be reduced to writing by the Discloser within forty-five (45) days thereafter, and shall be clearly marked with a confidential or proprietary legend.

7.2 Use and Protection of Information. Recipient agrees to protect such Information of the Discloser provided to Recipient from whatever source from distribution, disclosure or dissemination to anyone except employees of Recipient with a need to know such Information solely in conjunction with Recipient's analysis of the Information and for no other purpose except as authorized herein or as otherwise authorized in writing by the Discloser. Recipient will not make any copies of the Information inspected by it.

7.3 Exceptions. Recipient will not have an obligation to protect any portion of the Information which:

7.3.1 (a) is made publicly available by the Discloser or lawfully by a nonparty to this Agreement; (b) is lawfully obtained by Recipient from any source other than Discloser; (c) is previously known to Recipient without an obligation to keep it confidential; or (d) is released from the terms of this Agreement by Discloser upon written notice to Recipient.

7.4 Recipient agrees to use the Information solely for the purposes of negotiations pursuant to 47 U.S.C. 251 or in performing its obligations under this Agreement and for no other entity or purpose, except as may be otherwise agreed to in writing by the Parties. Nothing herein shall prohibit Recipient from providing information requested by the FCC or a state regulatory agency with jurisdiction over this matter, or to support a request for arbitration or an allegation of failure to negotiate in good faith.

7.5 Recipient agrees not to publish or use the Information for any advertising, sales or marketing promotions, press releases, or publicity matters that refer either directly or indirectly to the Information or to the Discloser or any of its affiliated companies.

7.6 The disclosure of Information neither grants nor implies any license to the Recipient under any trademark, patent, copyright, application or other intellectual property right that is now or may hereafter be owned by the Discloser.

7.7 Survival of Confidentiality Obligations. The Parties' rights and obligations under this Section 7 shall survive and continue in effect until two (2) years after the expiration or termination date of this Agreement with regard to all Information exchanged during the term of this Agreement. Thereafter, the Parties' rights and obligations hereunder survive and continue in effect with respect to any Information that is a trade secret under applicable law.

8 Resolution of Disputes

Except as otherwise stated in this Agreement, if any dispute arises as to the interpretation of any provision of this Agreement or as to the proper implementation of this Agreement, the aggrieved Party, if it elects to pursue resolution of the dispute, shall petition the Commission for a resolution of the

dispute. However, each Party reserves any rights it may have to seek judicial review of any ruling made by the Commission concerning this Agreement.

9 Taxes

9.1 Definition. For purposes of this Section, the terms "taxes" and "fees" shall include but not be limited to federal, state or local sales, use, excise, gross receipts or other taxes or tax-like fees of whatever nature and however designated (including tariff surcharges and any fees, charges or other payments, contractual or otherwise, for the use of public streets or rights of way, whether designated as franchise fees or otherwise) imposed, or sought to be imposed, on or with respect to the services furnished hereunder or measured by the charges or payments therefore, excluding any taxes levied on income.

9.2 Taxes and Fees Imposed Directly On Either Providing Party or Purchasing Party. Taxes and fees imposed on the providing Party, which are not permitted or required to be passed on by the providing Party to its customer, shall be borne and paid by the providing Party.

9.2.1 Taxes and fees imposed on the purchasing Party, which are not required to be collected and/or remitted by the providing Party, shall be borne and paid by the purchasing Party.

9.3 Taxes and Fees Imposed on Purchasing Party But Collected And Remitted By Providing Party. Taxes and fees imposed on the purchasing Party shall be borne by the purchasing Party, even if the obligation to collect and/or remit such taxes or fees is placed on the providing Party.

9.3.1 To the extent permitted by applicable law, any such taxes and/or fees shall be shown on applicable billing documents between the Parties. Notwithstanding the foregoing, the purchasing Party shall remain liable for any such taxes and fees regardless of whether they are actually billed by the providing Party at the time that the respective service is billed.

9.3.2 If the purchasing Party determines that in its opinion any such taxes or fees are not payable, the providing Party shall not bill such taxes or fees to the purchasing Party if the purchasing Party provides written certification, reasonably satisfactory to the providing Party, stating that it is exempt or otherwise not subject to the tax or fee, setting forth the basis therefor, and satisfying any other requirements under applicable law. If any authority seeks to collect any such tax or fee that the purchasing Party has determined and certified not to be payable, or any such tax or fee that was not billed by the providing Party, the purchasing Party may contest the same in good faith, at its own expense. In any such contest, the purchasing Party shall promptly furnish the providing Party with copies of all filings in any proceeding, protest, or legal challenge, all rulings issued in connection therewith, and all correspondence between the purchasing Party and the taxing authority.

9.3.3 In the event that all or any portion of an amount sought to be collected must be paid in order to contest the imposition of any such tax or fee, or to avoid the existence of a lien on the assets of the providing Party during the pendency of such contest, the purchasing Party shall be responsible for such payment and shall be entitled to the benefit of any refund or recovery.

9.3.4 If it is ultimately determined that any additional amount of such a tax or fee is due to the imposing authority, the purchasing Party shall pay such additional amount, including any interest and penalties thereon.

9.3.5 Notwithstanding any provision to the contrary, the purchasing Party shall protect, indemnify and hold harmless (and defend at the purchasing Party's expense) the providing Party from and against any such tax or fee, interest or penalties thereon, or other charges or payable expenses (including reasonable attorney fees) with respect thereto, which are incurred by the providing Party in connection with any claim for or contest of any such tax or fee.

9.3.6 Each Party shall notify the other Party in writing of any assessment, proposed assessment or other claim for any additional amount of such a tax or fee by a taxing authority; such notice to be provided, if possible, at least ten (10) days prior to the date by which a response, protest or other appeal must be filed, but in no event later than thirty (30) days after receipt of such assessment, proposed assessment or claim.

9.4 Taxes and Fees Imposed on Providing Party But Passed On To Purchasing Party. Taxes and fees imposed on the providing Party, which are permitted or required to be passed on by the providing Party to its customer, shall be borne by the purchasing Party.

9.4.1 To the extent permitted by applicable law, any such taxes and/or fees shall be shown on applicable billing documents between the Parties. Notwithstanding the foregoing, the purchasing Party shall remain liable for any such taxes and fees regardless of whether they are actually billed by the providing Party at the time that the respective service is billed.

9.4.2 If the purchasing Party disagrees with the providing Party's determination as to the application or basis for any such tax or fee, the Parties shall consult with respect to the imposition and billing of such tax or fee. Notwithstanding the foregoing, the providing Party shall retain ultimate responsibility for determining whether and to what extent any such taxes or fees are applicable, and the purchasing Party shall abide by such determination and pay such taxes or fees to the providing Party. The providing Party shall further retain ultimate responsibility for determining whether and how to contest the imposition of such taxes and fees; provided, however, that any such contest undertaken at the request of the purchasing Party shall be at the purchasing Party's expense.

9.4.3 In the event that all or any portion of an amount sought to be collected must be paid in order to contest the imposition of any such tax or fee, or to avoid the existence of a lien on the assets of the providing Party during the pendency of such contest, the purchasing Party shall be responsible for such payment and shall be entitled to the benefit of any refund or recovery.

9.4.4 If it is ultimately determined that any additional amount of such a tax or fee is due to the imposing authority, the purchasing Party shall pay such additional amount, including any interest and penalties thereon.

9.4.5 Notwithstanding any provision to the contrary, the purchasing Party shall protect, indemnify and hold harmless (and defend at the purchasing Party's expense) the providing Party from and against any such tax or fee, interest or penalties thereon, or other reasonable charges or payable expenses (including reasonable attorneys' fees) with respect thereto, which are incurred by the providing Party in connection with any claim for or contest of any such tax or fee.

9.4.6 Each Party shall notify the other Party in writing of any assessment, proposed assessment or other claim for any additional amount of such a tax or fee by a taxing authority; such notice to be provided, if possible, at least ten (10) days prior to the date by which a response, protest or other appeal must be filed, but in no event later than thirty (30) days after receipt of such assessment, proposed assessment or claim.

9.5 Mutual Cooperation. In any contest of a tax or fee by one Party, the other Party shall cooperate fully by providing records, testimony and such additional information or assistance as may reasonably be necessary to pursue the contest. Further, the other Party shall be reimbursed for any reasonable and necessary out-of-pocket copying and travel expenses incurred in assisting in such contest.

10 Force Majeure

In the event performance of this Agreement, or any obligation hereunder, is either directly or indirectly prevented, restricted, or interfered with by reason of fire, flood, earthquake or like acts of God, wars, revolution, civil commotion, explosion, acts of public enemy, embargo, acts of the government in its sovereign capacity, labor difficulties, including without limitation, strikes, slowdowns, picketing, or boycotts, unavailability of equipment from vendor, changes requested by Neutral Tandem, or any other circumstances beyond the reasonable control and without the fault or negligence of the Party affected, the Party affected, upon giving prompt notice to the other Party, shall be excused from such performance on a day-to-day basis to the extent of such prevention, restriction, or interference (and the other Party shall likewise be excused from performance of its obligations on a day-to-day basis until the delay, restriction or interference has ceased); provided, however, that the Party so affected shall use diligent efforts to avoid or remove such causes of non-performance and both Parties shall proceed whenever such causes are removed or cease.

11 Adoption of Agreements

Pursuant to 47 USC § 252(i) and 47 C.F.R. § 51.809, BellSouth shall make available to Neutral Tandem any entire interconnection agreement filed and approved pursuant to 47 USC § 252. The adopted agreement shall apply to the same states as the agreement that was adopted, and the term of the adopted agreement shall expire on the same date as set forth in the agreement that was adopted.

12 Modification of Agreement

12.1 If Neutral Tandem changes its name or makes changes to its company structure or identity due to a merger, acquisition, transfer or any other reason, it is the responsibility of Neutral Tandem to notify BellSouth of said change, request that an amendment to this Agreement, if necessary, be executed to reflect said change and notify the appropriate state commission of such modification of company structure in accordance with the state rules governing such modification in company structure if applicable. Additionally, Neutral Tandem shall provide BellSouth with any necessary supporting documentation.

12.2 No modification, amendment, supplement to, or waiver of the Agreement or any of its provisions shall be effective and binding upon the Parties unless it is made in writing and duly signed by the Parties.

12.3 In the event that any effective legislative, regulatory, judicial or other legal action materially affects any material terms of this Agreement, or the ability of Neutral Tandem or BellSouth to perform any material terms of this Agreement, Neutral Tandem or BellSouth may, on thirty (30) days' written notice, require that such terms be renegotiated, and the Parties shall renegotiate in good faith such mutually acceptable new terms as may be required. In the event that such new terms are not renegotiated within forty-five (45) days after such notice, and either Party elects to pursue resolution of such amendment such Party shall pursue the Dispute Resolution procedure set forth in this Agreement.

13 Legal Rights

Execution of this Agreement by either Party does not confirm or imply that the executing Party agrees with any decision(s) issued pursuant to the Telecommunications Act of 1996 and the consequences of those decisions on specific language in this Agreement. Neither Party waives its rights to appeal or otherwise challenge any such decision(s) and each Party reserves all of its rights to pursue any and all legal and/or equitable remedies, including appeals of any such decision(s).

14 Indivisibility

Subject to Section 15 (Severability), the Parties intend that this Agreement be indivisible and nonseverable, and each of the Parties acknowledges that it has

assented to all of the covenants and promises in this Agreement as a single whole and that all of such covenants and promises, taken as a whole, constitute the essence of the contract. Without limiting the generality of the foregoing, each of the Parties acknowledges that any provision by BellSouth of collocation space under this Agreement is solely for the purpose of facilitating the provision of other services under this Agreement and that neither Party would have contracted with respect to the provisioning of collocation space under this Agreement if the covenants and promises of the other Party with respect to the other services provided under this Agreement had not been made. The Parties further acknowledge that this Agreement is intended to constitute a single transaction, that the obligations of the Parties under this Agreement are interdependent, and that payment obligations under this Agreement are intended to be recouped against other payment obligations under this Agreement.

15 Severability

If any provision of this Agreement, or part thereof, shall be held invalid or unenforceable in any respect, the remainder of the Agreement or provision shall not be affected thereby, provided that the Parties shall negotiate in good faith to reformulate such invalid provision, or part thereof, or related provision, to reflect as closely as possible the original intent of the parties, consistent with applicable law, and to effectuate such portions thereof as may be valid without defeating the intent of such provision. In the event the Parties are unable to mutually negotiate such replacement language, either Party may elect to pursue the dispute resolution process set forth in Section 8.

16 Non-Waivers

A failure or delay of either Party to enforce any of the provisions hereof, to exercise any option which is herein provided, or to require performance of any of the provisions hereof shall in no way be construed to be a waiver of such provisions or options, and each Party, notwithstanding such failure, shall have the right thereafter to insist upon the performance of any and all of the provisions of this Agreement.

17 Governing Law

Where applicable, this Agreement shall be governed by and construed in accordance with federal and state substantive telecommunications law, including rules and regulations of the FCC and appropriate Commission. In all other respects, this Agreement shall be governed by and construed and enforced in accordance with the laws of the State of Georgia without regard to its conflict of laws principles.

18 Assignments and Transfers

18.1 Any assignment by either Party to any entity of any right, obligation or duty, or of any other interest hereunder, in whole or in part, without the prior written consent of the other Party shall be void. The assignee must provide evidence of a Commission approved certification to provide Telecommunications Service in each state that Neutral Tandem is entitled to provide Telecommunications Service. After BellSouth's consent, the Parties shall amend this Agreement to reflect such assignments and shall work cooperatively to implement any changes required due to such assignment. All obligations and duties of any Party under this Agreement shall be binding on all successors in interest and assigns of such Party. No assignment or delegation hereof shall relieve the assignor of its obligations under this Agreement in the event that the assignee fails to perform such obligations. Notwithstanding anything to the contrary in this Section, Neutral Tandem shall not be permitted to assign this Agreement in whole or in part to any entity unless either (1) Neutral Tandem pays all bills, past due and current, under this Agreement, or (2) Neutral Tandem's assignee expressly assumes liability for payment of such bills.

18.2 In the event that Neutral Tandem desires to transfer any services hereunder to another provider of Telecommunications Service, or Neutral Tandem desires to assume hereunder any services provisioned by BellSouth to another provider of Telecommunications Service, such transfer of services shall be subject to separately negotiated rates, terms and conditions.

19 Notices

19.1 With the exception of billing notices, governed by Attachment 7, every notice, consent or approval of a legal nature, required or permitted by this Agreement shall be in writing and shall be delivered either by hand, by overnight courier or by US mail postage prepaid, or email if an email address is listed below, addressed to:

BellSouth Telecommunications, Inc.

BellSouth Local Contract Manager
600 North 19th Street, 8th floor
Birmingham, AL 35203

and

ICS Attorney
Suite 4300
675 West Peachtree Street
Atlanta, GA 30375

Neutral Tandem-Florida, LLC and Neutral Tandem-Georgia, LLC

Ron Gavillet

EVP External Affairs
Neutral Tandem, Inc.
2 North LaSalle Street, Suite 1615
Chicago, Illinois 60602

or at such other address as the intended recipient previously shall have designated by written notice to the other Party.

19.2 Unless otherwise provided in this Agreement, notice by mail shall be effective on the date it is officially recorded as delivered by return receipt or equivalent, and in the absence of such record of delivery, it shall be presumed to have been delivered the fifth day, or next business day after the fifth day, after it was deposited in the mails.

19.3 Notwithstanding the above, BellSouth will post to BellSouth's Interconnection Web site changes to business processes and policies and shall post to BellSouth's Interconnection Web site or submit through applicable electronic systems, other service and business related notices not requiring an amendment to this Agreement.

20 Rule of Construction

No rule of construction requiring interpretation against the drafting Party hereof shall apply in the interpretation of this Agreement.

21 Headings of No Force or Effect

The headings of Articles and Sections of this Agreement are for convenience of reference only, and shall in no way define, modify or restrict the meaning or interpretation of the terms or provisions of this Agreement.

22 Multiple Counterparts

This Agreement may be executed in multiple counterparts, each of which shall be deemed an original, but all of which shall together constitute but one and the same document.

23 Filing of Agreement

Upon execution of this Agreement it shall be filed with the appropriate state regulatory agency pursuant to the requirements of Section 252 of the Act, and the Parties shall share equally any filing fees therefor. If the regulatory agency imposes any filing or public interest notice fees regarding the filing or approval of the Agreement, Neutral Tandem shall be responsible for publishing the required notice and the publication and/or notice costs shall be borne by Neutral Tandem. Notwithstanding the foregoing, this Agreement shall not be submitted for approval by the appropriate state regulatory agency unless and until such time as Neutral

Tandem is duly certified as a local exchange carrier in such state, except as otherwise required by a Commission.

24 Compliance with Law

The Parties have negotiated their respective rights and obligations pursuant to substantive Federal and State Telecommunications law and this Agreement is intended to memorialize the Parties' mutual agreement with respect to each Party's rights and obligations under the Act and applicable FCC and Commission orders, rules and regulations. Nothing contained herein, nor any reference to applicable rules and orders, is intended to expand on the Parties' rights and obligations as set forth herein. To the extent the provisions of this Agreement differ from the provisions of any Federal or State Telecommunications statute, rule or order, this Agreement shall control. Each Party shall comply at its own expense with all other laws of general applicability.

25 Necessary Approvals

Each Party shall be responsible for obtaining and keeping in effect all approvals from, and rights granted by, governmental authorities, building and property owners, other carriers, and any other persons that may be required in connection with the performance of its obligations under this Agreement. Each Party shall reasonably cooperate with the other Party in obtaining and maintaining any required approvals and rights for which such Party is responsible.

26 Good Faith Performance

Each Party shall act in good faith in its performance under this Agreement and, in each case in which a Party's consent or agreement is required or requested hereunder, such Party shall not unreasonably withhold or delay such consent or agreement.

27. Rates

27.1 Neutral Tandem shall pay the charges set forth in this Agreement. In the event that BellSouth is unable to bill the applicable rate or no rate is established or included in this Agreement for any services provided pursuant to this Agreement, BellSouth reserves the right to back bill Neutral Tandem for such rate or for the difference between the rate actually billed and the rate that should have been billed pursuant to this Agreement. To the extent a rate element is omitted or no rate is established, BellSouth has the right not to provision such service until the Agreement is amended to include such rate.

27.2 To the extent Neutral Tandem requests services not included in this Agreement, such services shall be provisioned pursuant to the rates, terms and conditions set forth in the applicable tariffs or a separately negotiated Agreement.

28 Rate True-Up

28.1 This section applies to rates that are expressly designated as subject to true-up under this Agreement**.**

28.2 The designated true-up rates shall be trued-up, either up or down, based on final prices determined either by further agreement between the Parties, or by a final and effective order of the Commission. The Parties shall implement the true-up by comparing the actual volumes and demand for each item, together with the designated true-up rates for each item, with the final prices determined for each item. Each Party shall keep its own records upon which the true-up can be based, and any final payment from one Party to the other shall be in an amount agreed upon by the Parties based on such records. In the event of any disagreement as between the records or the Parties regarding the amount of such true-up, the Parties shall submit the matter to the Dispute Resolution process in accordance with the provisions of this Agreement.

28.3 A final and effective order of the Commission that forms the basis of a true-up shall be based upon cost studies submitted by either or both Parties to the Commission and shall be binding upon BellSouth and Neutral Tandem specifically or upon all carriers generally, such as a generic cost proceeding.

29 Survival

The Parties' obligations under this Agreement which by their nature are intended to continue beyond the termination or expiration of this Agreement shall survive the termination or expiration of this Agreement.

30 Entire Agreement

30.1 This Agreement means the General Terms and Conditions, the Attachments identified in Section 30.2 below, and all documents identified therein, as such may be amended from time to time and which are incorporated herein by reference, all of which, when taken together, are intended to constitute one indivisible agreement. This Agreement sets forth the entire understanding and supersedes prior agreements between the Parties relating to the subject matter contained in this Agreement and merges all prior discussions between them. Any orders placed under prior agreements between the Parties shall be governed by the terms of this Agreement and Neutral Tandem acknowledges and agrees that any and all amounts and obligations owed for services provisioned or orders placed under prior agreements between the Parties, related to the subject matter hereof, shall be due and owing under this Agreement and be governed by the terms and conditions of this Agreement as if such services or orders were provisioned or placed under this Agreement. Neither Party shall be bound by any definition, condition, provision, representation, warranty, covenant or promise other than as expressly stated in this Agreement or as is contemporaneously or subsequently set forth in

writing and executed by a duly authorized officer or representative of the Party to be bound thereby.

30.2 This Agreement includes Attachments with provisions for the following:

Resale
Network Elements and Other Services
Network Interconnection
Collocation
Access to Numbers and Number Portability
Pre-Ordering, Ordering, Provisioning, Maintenance and Repair
Billing
Rights-of-Way, Conduits and Pole Attachments
Performance Measurements
BellSouth Disaster Recovery Plan
Bona Fide Request/New Business Request Process

30.3 Any reference throughout this Agreement to a tariff, industry guideline, BellSouth's technical guideline or reference, BellSouth business rule, guide or other such document containing processes or specifications applicable to the services provided pursuant to this agreement, shall be construed to refer to only those provisions thereof that are applicable to these services, and shall include any successor or replacement versions thereof, all as they are amended from time to time and all of which are incorporated herein by reference. References to state tariffs throughout this Agreement shall be to the tariff for the state in which the services were provisioned.

IN WITNESS WHEREOF, the Parties have executed this Agreement the day and year written below.

BellSouth Telecommunications, Inc.

By: Kristen E. Rowe

Name: Kristen E. Rowe

Title: Director

Date: 1/26/05

Neutral Tandem-Florida and Neutral Tandem-Georgia, LLC

By: David Tatak

Name: DAVID TATAK

Title: VP BILLING & REVENUE

Date: 1/24/05

Attachment 1

Resale

Table of Contents

1. Discount Rates 3

2. Definition of Terms 3

3. General Provisions 4

4. BellSouth's Provision of Services to Neutral Tandem 8

5. Maintenance of Services 9

6. Establishment of Service 10

7. Discontinuance of Service 10

8 White Pages Listings 11

9. Operator Services (Operator Call Processing and Directory Assistance) 13

10. Line Information Database (LIDB) 15

11. RAO Hosting 16

12. Optional Daily Usage File (ODUF) 16

13. Enhanced Optional Daily Usage File (EODUF) 16

Resale Restrictions ..... Exhibit A

Optional Daily Usage File (ODUF) ..... Exhibit B

Enhanced Option Daily Usage File (EODUF) ..... Exhibit C

Resale Discounts and Rates ..... Exhibit D

RESALE

1. Discount Rates

1.1 The discount rates applied to Neutral Tandem purchases of BellSouth Telecommunications Services for the purpose of resale shall be as set forth in Exhibit D. Such discounts have been determined by the applicable Commission to reflect the costs avoided by BellSouth when selling a service for wholesale purposes.

1.2 The telecommunications services available for purchase by Neutral Tandem for the purposes of resale to Neutral Tandem's End Users shall be available at BellSouth's tariffed rates less the discount set forth in Exhibit D to this Agreement and subject to the exclusions and limitations set forth in Exhibit A to this Agreement.

2. Definition of Terms

2.1 COMPETITIVE LOCAL EXCHANGE COMPANY (CLEC) means a telephone company certificated by the Commission to provide local exchange service within BellSouth's franchised area.

2.2 CUSTOMER OF RECORD means the entity responsible for placing application for service; requesting additions, rearrangements, maintenance or discontinuance of service; payment in full of charges incurred such as non-recurring, monthly recurring, toll, directory assistance, etc.

2.3 DEPOSIT means assurance provided by a customer in the form of cash, surety bond or bank letter of credit to be held by BellSouth.

2.4 END USER means the ultimate user of the Telecommunications Service.

2.5 END USER CUSTOMER LOCATION means the physical location of the premises where an End User makes use of the telecommunications services.

2.6 NEW SERVICES means functions, features or capabilities that are not currently offered by BellSouth. This includes packaging of existing services or combining a new function, feature or capability with an existing service.

2.7 RESALE means an activity wherein a certificated CLEC, such as Neutral Tandem, subscribes to the telecommunications services of BellSouth and then offers those telecommunications services to the public.

3. General Provisions

3.1 All of the negotiated rates, terms and conditions set forth in this Attachment pertain to the resale of BellSouth's retail telecommunications services and other services specified in this Attachment. Subject to effective and applicable FCC and Commission rules and orders, BellSouth shall make available to Neutral Tandem for resale those telecommunications services BellSouth makes available, pursuant to its General Subscriber Services Tariff and Private Line Services Tariff, to customers who are not telecommunications carriers.

3.1.1 When Neutral Tandem provides Resale service in a cross boundary area (areas that are part of the local serving area of another state's exchange) the rates, regulations and discounts for the tariffing state will apply. Billing will be from the serving state.

3.1.2 In Tennessee, if Neutral Tandem does not resell Lifeline service to any End Users, and if Neutral Tandem agrees to order an appropriate Operator Services/Directory Assistance block as set forth in BellSouth's General Subscriber Services Tariff, the discount shall be 21.56%.

3.1.2.1 In the event Neutral Tandem resells Lifeline service to any End User in Tennessee, BellSouth will begin applying the 16% discount rate to all services. Upon Neutral Tandem and BellSouth's implementation of a billing arrangement whereby a separate Master Account (Q-account) associated with a separate Operating Customer Number (OCN) is established for billing of Lifeline service End Users, the discount shall be applied as set forth in 3.1.2 preceding for the non-Lifeline affected Master Account (Q-account).

3.1.2.2 Neutral Tandem must provide written notification to BellSouth within 30 days prior to either providing its own operator services/ directory services or orders the appropriate operator services/directory assistance blocking, to qualify for the higher discount rate of 21.56%.

3.2 Neutral Tandem may purchase resale services from BellSouth for its own use in operating its business. The resale discount will apply to those services under the following conditions:

3.2.1 Neutral Tandem must resell services to other End Users.

3.2.2 Neutral Tandem cannot be a competitive local exchange telecommunications company for the single purpose of selling to itself.

3.3 Neutral Tandem will be the customer of record for all services purchased from BellSouth. Except as specified herein, BellSouth will take orders from, bill and receive payment from Neutral Tandem for said services.

3.4 Neutral Tandem will be BellSouth's single point of contact for all services purchased pursuant to this Agreement. BellSouth shall have no contact with the End User except to the extent provided for herein. Each Party shall provide to the other a nation wide (50 states) toll-free contact number for purposes of repair and maintenance.

3.5 BellSouth will continue to bill the End User for any services that the End User specifies it wishes to receive directly from BellSouth. BellSouth maintains the right to serve directly any End User within the service area of Neutral Tandem. BellSouth will continue to market directly its own telecommunications products and services and in doing so may establish independent relationships with End Users of Neutral Tandem. Neither Party shall interfere with the right of any person or entity to obtain service directly from the other Party.

3.5.1 When an End User of Neutral Tandem or BellSouth elects to change his/her carrier to the other Party, both Parties agree to release the End User's service to the other Party concurrent with the due date of the service order, which shall be established based on the standard interval for the End User's requested service as set forth in the BellSouth Product and Services Interval Guide.

3.5.2 BellSouth and Neutral Tandem will refrain from contacting an End User who has placed or whose selected carrier has placed on the End User's behalf an order to change the End User's service provider from BellSouth or Neutral Tandem to the other Party until such time that the order for service has been completed.

3.6 Current telephone numbers may normally be retained by the End User and are assigned to the service furnished. However, neither Party nor the End User has a property right to the telephone number or any other call number designation associated with services furnished by BellSouth, and no right to the continuance of service through any particular central office. BellSouth reserves the right to change such numbers, or the central office designation associated with such numbers, or both, whenever BellSouth deems it necessary to do so in the conduct of its business and in accordance with BellSouth practices and procedures on a nondiscriminatory basis.

3.7 Where BellSouth provides resold services to Neutral Tandem, BellSouth will provide Neutral Tandem with on-line access to intermediate telephone numbers as defined by applicable FCC rules and regulations on a first come first served basis. Neutral Tandem acknowledges that such access to numbers shall be in accordance with the appropriate FCC rules and regulations. Neutral Tandem acknowledges that there may be instances where there is a shortage of telephone numbers in a particular Common Language Location Identifier Code (CLLIC); and in such instances, Neutral Tandem shall return unused intermediate telephone numbers to BellSouth upon BellSouth's request. BellSouth shall make all such requests on a nondiscriminatory basis.

3.8 BellSouth will allow Neutral Tandem to designate up to 100 intermediate telephone numbers per CLLIC, for Neutral Tandem's sole use. Assignment, reservation and use of telephone numbers shall be governed by applicable FCC rules and regulations. Neutral Tandem acknowledges that there may be instances where there is a shortage of telephone numbers in a particular CLLIC and BellSouth has the right to limit access to blocks of intermediate telephone numbers. These instances include: 1) where jeopardy status has been declared by the North American Numbering Plan (NANP) for a particular Numbering Plan Area (NPA); or 2) where a rate center has less than six months supply of numbering resources.

3.9 Service is furnished subject to the condition that it will not be used for any unlawful purpose.

3.10 Service will be discontinued if any law enforcement agency advises that the service being used is in violation of the law.

3.11 BellSouth can refuse service when it has grounds to believe that service will be used in violation of the law.

3.12 BellSouth will cooperate with law enforcement agencies with subpoenas and court orders relating to Neutral Tandem's End Users, pursuant to Section 6 of the General Terms and Conditions.

3.13 If Neutral Tandem or its End Users utilize a BellSouth resold telecommunications service in a manner other than that for which the service was originally intended as described in BellSouth's retail tariffs, Neutral Tandem has the responsibility to notify BellSouth. BellSouth will only provision and maintain said service consistent with the terms and conditions of the tariff describing said service.

3.14 Facilities and/or equipment utilized by BellSouth to provide service to Neutral Tandem remain the property of BellSouth.

3.15 White page directory listings for Neutral Tandem End Users will be provided in accordance with Section 8 below.

3.16 Service Ordering and Operations Support Systems (OSS)

3.16.1 Neutral Tandem must order services through resale interfaces, i.e., the Local Carrier Service Center (LCSC) and/or appropriate Complex Resale Support Group (CRSG) pursuant to this Agreement. BellSouth has developed and made available the interactive interfaces by which Neutral Tandem may submit a Local Service Request (LSR) electronically as set forth in Attachment 6 of this Agreement. Service orders will be in a standard format designated by BellSouth.

3.16.2 LSRs submitted by means of one of these interactive interfaces will incur an OSS electronic charge as set forth in Exhibit D of this Attachment. An individual LSR will be identified for billing purposes by its Purchase Order Number (PON). LSRs submitted by means other than one of these interactive interfaces (Mail, fax, courier, etc.) will incur a manual order charge as set forth in Exhibit D of this Attachment. Supplements or clarifications to a previously billed LSR will not incur another OSS charge.

3.16.3 Denial/Restoral OSS Charge. In the event Neutral Tandem provides a list of customers to be denied and restored, rather than an LSR, each location on the list will require a separate PON and therefore will be billed as one LSR per location.

3.16.4 Cancellation OSS Charge. Neutral Tandem will incur an OSS charge for an accepted LSR that is later canceled.

3.17 Where available to BellSouth's End Users, BellSouth shall provide the following telecommunications services at a discount to allow for voice mail services**:**

- Message Waiting Indicator ("MWI"), stutter dialtone and message waiting light feature capabilities
- Call Forward Busy Line ("CF/B")
- Call Forward Don't Answer ("CF/DA")

Further, BellSouth messaging services set forth in BellSouth's Messaging Service Information Package shall be made available for resale without the wholesale discount.

3.18 BellSouth shall provide branding for, or shall unbrand, voice mail services for Neutral Tandem per the Bona Fide Request/New Business Request process as set forth in Attachment 11 of this Agreement.

3.19 BellSouth's Inside Wire Maintenance Service Plan is available for resale at rates, terms and conditions as set forth by BellSouth and without the wholesale discount.

3.20 In the event Neutral Tandem acquires an End User whose service is provided pursuant to a BellSouth Special Assembly, BellSouth shall make available to Neutral Tandem that Special Assembly at the wholesale discount at Neutral Tandem's option. Neutral Tandem shall be responsible for all terms and conditions of such Special Assembly including but not limited to termination liability if applicable.

3.21 BellSouth shall provide 911/E911 for Neutral Tandem customers in the same manner that it is provided to BellSouth customers. BellSouth shall provide and validate Neutral Tandem customer information to the PSAP. BellSouth shall use

its service order process to update and maintain, on the same schedule that it uses for its customers, the Neutral Tandem customer service information in the ALI/DMS (Automatic Location Identification/Location Information) databases used to support 911/E911 services.

3.22 BellSouth shall bill, and Neutral Tandem shall pay, the End User line charge associated with implementing Number Portability as set forth in BellSouth's FCC No. 1 tariff. This charge is not subject to the wholesale discount.

3.23 Pursuant to 47 CFR Section 51.617, BellSouth shall bill to Neutral Tandem, and Neutral Tandem shall pay, the End User common line charges identical to the End User common line charges BellSouth bills its End Users.

4. BellSouth's Provision of Services to Neutral Tandem

4.1 Resale of BellSouth services shall be as follows:

4.1.1 The resale of telecommunications services shall be limited to users and uses conforming to the class of service restrictions.

4.1.2 Hotel and Hospital PBX services are the only telecommunications services available for resale to Hotel/Motel and Hospital End Users, respectively. Similarly, Access Line Service for Customer Provided Coin Telephones is the only local service available for resale to Payphone Service Provider (PSP) customers. Shared Tenant Service customers can only be sold those local exchange access services available in BellSouth's A23 Shared Tenant Service Tariff in the states of Florida, Georgia, North Carolina and South Carolina, and in A27 in the states of Alabama, Kentucky, Louisiana, Mississippi and Tennessee.

4.1.3 BellSouth reserves the right to periodically audit services purchased by Neutral Tandem to establish authenticity of use. Such audit shall not occur more than once in a calendar year. Neutral Tandem shall make any and all records and data available to BellSouth or BellSouth's auditors on a reasonable basis. BellSouth shall bear the cost of said audit. Any information provided by Neutral Tandem for purposes of such audit shall be deemed Confidential Information pursuant to the General Terms and Conditions of this Agreement.

4.2 Subject to Exhibit A hereto, resold services can only be used in the same manner as specified in BellSouth's Tariffs. Resold services are subject to the same terms and conditions as are specified for such services when furnished to an individual End User of BellSouth in the appropriate section of BellSouth's Tariffs. Specific tariff features (e.g. a usage allowance per month) shall not be aggregated across multiple resold services.

4.3 Neutral Tandem may resell services only within the specific service area as defined in its certificate of operation approved by the Commission.

4.4 If Neutral Tandem cancels an order for resold services, any costs incurred by BellSouth in conjunction with provisioning of such order will be recovered in accordance with BellSouth's General Subscriber Services Tariffs and Private Line Services Tariffs.

4.5 Service Jointly Provisioned with an Independent Company or Competitive Local Exchange Company Areas. BellSouth will in some instances provision resold services in accordance with the General Subscriber Services Tariff and Private Line Tariffs jointly with an Independent Company or other Competitive Local Exchange Carrier.

4.5.1 When Neutral Tandem assumes responsibility for such service, all terms and conditions defined in the Tariff will apply for services provided within the BellSouth service area only.

4.5.2 Service terminating in an Independent Company or other Competitive Local Exchange Carrier area will be provisioned and billed by the Independent Company or other Competitive Local Exchange Carrier directly to Neutral Tandem.

4.5.3 Neutral Tandem must establish a billing arrangement with the Independent Company or other Competitive Local Exchange Carrier prior to assuming an End User account where such circumstances apply.

4.5.4 Specific guidelines regarding such services are available on the BellSouth Web site at http://www.interconnection.bellsouth.com.

5. Maintenance of Services

5.1 Services resold pursuant to this Attachment and BellSouth's General Subscriber Service Tariff and Private Line Service Tariff and facilities and equipment provided by BellSouth shall be maintained by BellSouth.

5.2 Neutral Tandem or its End Users may not rearrange, move, disconnect, remove or attempt to repair any facilities owned by BellSouth except with the written consent of BellSouth.

5.3 Neutral Tandem accepts responsibility to notify BellSouth of situations that arise that may result in a service problem.

5.4 Neutral Tandem will contact the appropriate repair centers in accordance with procedures established by BellSouth.

5.5 For all repair requests, Neutral Tandem shall adhere to BellSouth's prescreening guidelines prior to referring the trouble to BellSouth.

5.6 BellSouth will bill Neutral Tandem for handling troubles that are found not to be in BellSouth's network pursuant to its standard time and material charges. The

standard time and material charges will be no more than what BellSouth charges to its retail customers for the same services.

5.7 BellSouth reserves the right to contact Neutral Tandem's End Users, if deemed necessary, for maintenance purposes.

6. Establishment of Service

6.1 After receiving certification as a local exchange carrier from the applicable regulatory agency, Neutral Tandem will provide the appropriate BellSouth Advisory team manager the necessary documentation to enable BellSouth to establish accounts for resold services ("master account"). Neutral Tandem is required to provide the following before a master account is established: blanket letter of authorization, misdirected number form, proof of PSC/PUC certification, the Application for Master Account, an Operating Company Number ("OCN") assigned by the National Exchange Carriers Association ("NECA") and a deposit and tax exemption certificate, if applicable.

6.2 Neutral Tandem shall provide to BellSouth a blanket letter of authorization ("LOA") certifying that Neutral Tandem will have End User authorization prior to viewing the End User's customer service record or switching the End User's service. BellSouth will not require End User confirmation prior to establishing service for Neutral Tandem's End User.

6.3 BellSouth will accept a request directly from the End User for conversion of the End User's service from Neutral Tandem to BellSouth or will accept a request from another CLEC for conversion of the End User's service from Neutral Tandem to such other CLEC. Upon completion of the conversion BellSouth will notify Neutral Tandem that such conversion has been completed.

7. Discontinuance of Service

7.1 The procedures for discontinuing service to an End User are as follows:

7.1.1 BellSouth will deny service to Neutral Tandem's End User on behalf of, and at the request of, Neutral Tandem. Upon restoration of the End User's service, restoral charges will apply and will be the responsibility of Neutral Tandem.

7.1.2 At the request of Neutral Tandem, BellSouth will disconnect a Neutral Tandem End User.

7.1.3 All requests by Neutral Tandem for denial or disconnection of an End User for nonpayment must be in writing.

7.1.4 Neutral Tandem will be made solely responsible for notifying the End User of the proposed disconnection of the service.

7.1.5 BellSouth will continue to process calls made to the Annoyance Call Center and will advise Neutral Tandem when it is determined that annoyance calls are originated from one of its End User's locations. BellSouth shall be indemnified, defended and held harmless by Neutral Tandem and/or the End User against any claim, loss or damage arising from providing this information to Neutral Tandem. It is the responsibility of Neutral Tandem to take the corrective action necessary with its End Users who make annoying calls. (Failure to do so will result in BellSouth's disconnecting the End User's service.)

8 White Pages Listings

8.1 BellSouth shall provide Neutral Tandem and its End Users access to white pages directory listings under the following terms:

8.1.2 Listings. Neutral Tandem shall provide all new, changed and deleted listings on a timely basis and BellSouth or its agent will include Neutral Tandem residential and business End User listings in the appropriate White Pages (residential and business) or alphabetical directories in the geographic areas covered by this Agreement. Directory listings will make no distinction between Neutral Tandem and BellSouth End Users. Neutral Tandem shall provide listing information in accordance with the procedures set forth in The BellSouth Business Rules for Local Ordering found at BellSouth's Interconnection Services Web site.

8.1.3 Unlisted/Non-Published End Users. Neutral Tandem will be required to provide to BellSouth the names, addresses and telephone numbers of all Neutral Tandem End Users who wish to be omitted from directories. Unlisted/Non-Published listings will be subject to the rates as set forth in BellSouth's General Subscriber Services Tariff (GSST) and shall not be subject to wholesale discount.

8.1.4 Inclusion of Neutral Tandem End Users in Directory Assistance Database. BellSouth will include and maintain Neutral Tandem End User listings in BellSouth's Directory Assistance databases. Neutral Tandem shall provide such Directory Assistance listings to BellSouth at no charge.

8.1.5 Listing Information Confidentiality. BellSouth will afford Neutral Tandem's directory listing information the same level of confidentiality that BellSouth affords its own directory listing information.

8.1.6 Additional and Designer Listings. Additional and designer listings will be offered by BellSouth at tariffed rates as set forth in the GSST and shall not be subject to the wholesale discount.

8.1.7 Rates. So long as Neutral Tandem provides listing information to BellSouth as set forth in Section 8.1.2 above, BellSouth shall provide to Neutral Tandem one (1) basic White Pages directory listing per Neutral Tandem End User at no charge other than applicable service order charges as set forth in BellSouth's tariffs.

Except in the case of a local service request (LSR) submitted solely to port a number from BellSouth, if such listing is requested on the initial LSR associated with the request for services, a single manual service order charge or electronic service order charge, as appropriate, as described in Attachment 6 of this Agreement, will apply to both the request for service and the request for the directory listing. Where a subsequent LSR is placed solely to request a directory listing, or is placed to port a number and request a directory listing, separate service order charges as set forth in BellSouth's tariffs shall apply, as well as the manual service order charge or the electronic service order charge, as appropriate, as described in Attachment 6 of this Agreement.

8.2 Directories. BellSouth or its agent shall make available White Pages directories to Neutral Tandem End User at no charge or as specified in a separate agreement between Neutral Tandem and BellSouth's agent.

8.3 Procedures for submitting Neutral Tandem Subscriber Listing Information (SLI) are found in The BellSouth Business Rules for Local Ordering found at BellSouth's Interconnection Services Web site.

8.3.1 Neutral Tandem authorizes BellSouth to release all Neutral Tandem SLI provided to BellSouth by Neutral Tandem to qualifying third parties pursuant to either a license agreement or BellSouth's Directory Publishers Database Service (DPDS), General Subscriber Services Tariff (GSST), as the same may be amended from time to time. Such Neutral Tandem SLI shall be intermingled with BellSouth's own End User listings and listings of any other CLEC that has authorized a similar release of SLI.

8.3.2 No compensation shall be paid to Neutral Tandem for BellSouth's receipt of Neutral Tandem SLI, or for the subsequent release to third parties of such SLI. In addition, to the extent BellSouth incurs costs to modify its systems to enable the release of Neutral Tandem's SLI, or costs on an ongoing basis to administer the release of Neutral Tandem SLI, Neutral Tandem shall pay to BellSouth its proportionate share of the reasonable costs associated therewith. At any time that costs may be incurred to administer the release of Neutral Tandem's SLI, Neutral Tandem will be notified. If Neutral Tandem does not wish to pay its proportionate share of these reasonable costs, Neutral Tandem may instruct BellSouth that it does not wish to release its SLI to independent publishers, and Neutral Tandem shall amend this Agreement accordingly. Neutral Tandem will be liable for all costs incurred until the effective date of the amendment.

8.3.3 Neither BellSouth nor any agent shall be liable for the content or accuracy of any SLI provided by Neutral Tandem under this Agreement. Neutral Tandem shall indemnify, except to the extent caused by BellSouth's gross negligence or willful misconduct, hold harmless and defend BellSouth and its agents from and against any damages, losses, liabilities, demands, claims, suits, judgments, costs and expenses (including but not limited to reasonable attorneys' fees and expenses)

arising from BellSouth's tariff obligations or otherwise and resulting from or arising out of any third party's claim of inaccurate Neutral Tandem listings or use of the SLI provided pursuant to this Agreement. BellSouth may forward to Neutral Tandem any complaints received by BellSouth relating to the accuracy or quality of Neutral Tandem listings.

8.3.4 Listings and subsequent updates will be released consistent with BellSouth system changes and/or update scheduling requirements.

9. Operator Services (Operator Call Processing and Directory Assistance)

9.1 Operator Call Processing provides: (1) operator handling for call completion (for example, collect, third number billing, and manual calling-card calls). (2) operator or automated assistance for billing after the End User has dialed the called number (for example, calling card calls); and (3) special services including but not limited to Busy Line Verification and Emergency Line Interrupt (ELI), Emergency Agency Call and Operator-assisted Directory Assistance.

9.2 Upon request for BellSouth Operator Call Processing, BellSouth shall:

9.2.1 Process 0+ and 0- dialed local calls

9.2.2 Process 0+ and 0- intraLATA toll calls.

9.2.3 Process calls that are billed to Neutral Tandem End User's calling card that can be validated by BellSouth.

9.2.4 Process person-to-person calls.

9.2.5 Process collect calls.

9.2.6 Provide the capability for callers to bill a third party and shall also process such calls.

9.2.7 Process station-to-station calls.

9.2.8 Process Busy Line Verify and Emergency Line Interrupt requests.

9.2.9 Process emergency call trace originated by Public Safety Answering Points.

9.2.10 Process operator-assisted directory assistance calls.

9.2.11 Adhere to equal access requirements, providing Neutral Tandem local End Users the same IXC access that BellSouth provides its own operator service.

9.2.12 Exercise at least the same level of fraud control in providing Operator Service to Neutral Tandem that BellSouth provides for its own operator service.

9.2.13 Perform Billed Number Screening when handling Collect, Person-to-Person, and Billed-To-Third-Party calls.

9.2.14 Direct customer account and other similar inquiries to the customer service center designated by Neutral Tandem.

9.2.15 Provide call records to Neutral Tandem in accordance with ODUF standards.

9.2.16 The interface requirements shall conform to the interface specifications for the platform used to provide Operator Services as long as the interface conforms to industry standards.

9.3 Directory Assistance Service. Directory Assistance Service provides local and non-local End User telephone number listings with the option to complete the call at the caller's direction separate and distinct from local switching.

9.3.1 Directory Assistance Service shall provide up to two listing requests per call, if available and if requested by Neutral Tandem's End User. BellSouth shall provide caller-optional directory assistance call completion service at rates set forth in BellSouth's General Subscriber Services Tariff to one of the provided listings.

9.4 Directory Assistance Service Updates. BellSouth shall update End User listings changes daily. These changes include:

9.4.1 New End User connections

9.4.2 End User disconnections

9.4.3 End User address changes

9.4.4 These updates shall also be provided for non-listed and non-published numbers for use in emergencies.

9.5 Selective Call Routing using Line Class Codes (SCR-LCC). Where Neutral Tandem resells BellSouth's services and utilizes an operator services provider other than BellSouth, BellSouth will route Neutral Tandem's End User calls to that provider through Selective Call Routing.

9.5.1 Selective Call Routing using Line Class Codes (SCR-LCC) provides the capability for Neutral Tandem to have its Operator Call Processing and Directory Assistance (OCP/DA) calls routed to BellSouth's OCP/DA platform for BellSouth provided Custom Branded or Unbranded OCP/DA or to its own or an alternate OCP/DA platform for Self-Branded OCP/DA. SCR-LCC is only available if line class code capacity is available in the requested BellSouth end office switches.

9.5.2 Custom Branding for DA is not available for certain classes of service, including but not limited to Hotel/Motel services, WATS service and certain PBX services.

9.5.3 Where available, Neutral Tandem specific and unique LLCs are programmed in each BellSouth end office switch where Neutral Tandem intends to service End Users with customized OCP/DA branding. The LCCs specifically identify Neutral Tandem's End Users so OCP/DA calls can be routed over the appropriate trunk group to the requested OCP/DA platform. Additional line class codes are required in each end office if the end office serves multiple NPAs (i.e., a unique LCC is required per NPA), and/or if the end office switch serves multiple rate areas and Neutral Tandem intends to provide Neutral Tandem-branded OCP/DA to its End Users in these multiple rate areas.

9.5.4 SCR-LCC supporting Custom Branding and Self Branding require Neutral Tandem to order dedicated transport and trunking from each BellSouth end office identified by Neutral Tandem, either to the BellSouth Traffic Operator Position System (TOPS) for Custom Branding or to the Neutral Tandem Operator Service Provider for Self Branding. Separate trunk groups are required for OCP/DA. Rates for transport and trunks are set forth in applicable BellSouth Tariffs.

9.5.5 The rates for SCR-LCC are as set forth in Exhibit D of this Attachment. There is a nonrecurring charge for the establishment of each LCC in each BellSouth central office.

9.5.6 Unbranded DA and/or OCP calls ride common trunk groups provisioned by BellSouth from those end offices identified by Neutral Tandem to the BellSouth Tops. The calls are routed to "No Announcement."

10. Line Information Database (LIDB)

10.1 The BellSouth Line Information Database (LIDB) stores current information on working telephone numbers and billing account numbers. LIDB data is used by providers of Telecommunications Services to validate billing of collect calls, calls billed to a third party number and nonproprietary calling card calls, to screen out attempts to bill calls to payphones, for billing and for fraud prevention.

10.2 Where Neutral Tandem is purchasing Resale services BellSouth shall utilize BellSouth's service order generated from Neutral Tandem LSR's to populate LIDB with Neutral Tandem's End User information BellSouth provides access to information in its LIDB, including Neutral Tandem End User information, to various providers of Telecommunications Services via queries to LIDB pursuant to applicable tariffs. Information stored for Neutral Tandem, pursuant to this Agreement, shall be available to those Telecommunications Service providers.

10.2.1 When necessary for fraud control measures, BellSouth may perform additions, updates and deletions of Neutral Tandem data to the LIDB (e.g., calling card deactivation).

10.3 Responsibilities of the Parties

10.3.1 BellSouth will administer the data provided by Neutral Tandem pursuant to this Agreement in the same manner as BellSouth administers its own data.

10.3.2 Neutral Tandem is responsible for completeness and accuracy of the data being provided to BellSouth.

10.3.3 BellSouth shall not be responsible to Neutral Tandem for any lost revenue which may result from BellSouth's administration of the LIDB pursuant to its established practices and procedures as they exist and as they may be changed by BellSouth in its sole discretion from time to time.

11. RAO Hosting

11.1 RAO Hosting is not required for resale in the BellSouth region.

12. Optional Daily Usage File (ODUF)

12.1 The Optional Daily Usage File (ODUF) Agreement with terms and conditions is included in this Attachment as Exhibit B. Rates for ODUF are as set forth in Exhibit D of this Attachment.

12.2 BellSouth will provide ODUF service upon written request.

13. Enhanced Optional Daily Usage File (EODUF)

13.1 The Enhanced Optional Daily Usage File (EODUF) service Agreement with terms and conditions is included in this Attachment as Exhibit C. Rates for EODUF are as set forth in Exhibit D of this Attachment.

13.2 BellSouth will provide EODUF service upon written request.

EXCLUSIONS AND LIMITATIONS ON SERVICES AVAILABLE FOR RESALE (Note 3)

	Type of Service	AL		FL		GA		KY		LA		MS		NC		SC		TN	
		Resale	Discount	Resale	Discount	Resale	Discount	Resale	Discount	Resale	Discount	Resale	Discount	Resale	Discount	Resale	Discount	Resale	Discount
1	Grandfathered Services (Note 1)	Yes	Yes	Yes	Yes	Yes	Yes	Yes	Yes	Yes	Yes	Yes	Yes	Yes	Yes	Yes	Yes	Yes	Yes
2	Promotions - > 90 Days(Note 2 & 3)	Yes	Yes	Yes	Yes	Yes	Yes	Yes	Yes	Yes	Yes	Yes	Yes	Yes	Yes	Yes	Yes	Yes	Yes
3	Promotions - ≤ 90 Days (Note 2 & 3)	Yes	No	Yes	No	Yes	No	Yes	No	Yes	No	Yes	No	Yes	No	Yes	No	Yes	No
4	Lifeline/Link Up Services	Yes	Yes	Yes	Yes	Yes	Yes	No	No	Yes	Yes	Yes	Yes	Yes	Yes	Yes	Yes	Yes	Yes
5	911/E911 Services	Yes	Yes	Yes	Yes	Yes	Yes	Yes	Yes	No	No	Yes	Yes	Yes	Yes	Yes	Yes	Yes	Yes
6	N11 Services (Note 1)	Yes	Yes	Yes	Yes	Yes	Yes	No	No	No	No	Yes	Yes	Yes	Yes	No	No	Yes	Yes
7	MemoryCall® Service	Yes	No	Yes	No	Yes	No	Yes	No	Yes	No	Yes	No	Yes	No	Yes	No	Yes	No
8	Mobile Services	Yes	No	Yes	No	Yes	No	Yes	No	Yes	No	Yes	No	Yes	No	Yes	No	Yes	No
9	Federal Subscriber Line Charges	Yes	No	Yes	No	Yes	No	Yes	No	Yes	No	Yes	No	Yes	No	Yes	No	Yes	No
10	Nonrecurring Charges	Yes	Yes	Yes	Yes	Yes	Yes	Yes	Yes	Yes	Yes	Yes	Yes	Yes	Yes	Yes	Yes	Yes	No
11	End User Line Chg-Number Portability	Yes	No	Yes	No	Yes	No	Yes	No	Yes	No	Yes	No	Yes	No	Yes	No	Yes	No
12	Public Telephone Access Svc(PTAS)	Yes	Yes	Yes	Yes	Yes	Yes	Yes	Yes	Yes	Yes	Yes	Yes	Yes	Yes	Yes	No	Yes	Yes
13	Inside Wire Maint Service Plan	Yes	No	Yes	No	Yes	No	Yes	No	Yes	No	Yes	No	Yes	No	Yes	No	Yes	No

	Applicable Notes:
1.	**Grandfathered services** can be resold only to existing subscribers of the grandfathered service.
2.	Where available for resale, **promotions** will be made available only to End Users who would have qualified for the promotion had it been provided by BellSouth directly.
3.	Promotions shall be available only for the term set forth in the applicable tariff.
4.	Some of BellSouth's local exchange and toll telecommunications services are not available in certain central offices and areas.

Optional Daily Usage File

1. Upon written request from Neutral Tandem, BellSouth will provide the Optional Daily Usage File (ODUF) service to Neutral Tandem pursuant to the terms and conditions set forth in this section.

2. Neutral Tandem shall furnish all relevant information required by BellSouth for the provision of the ODUF.

3. The ODUF feed provides Neutral Tandem messages that were carried over the BellSouth network and processed by BellSouth for Neutral Tandem.

4. Charges for ODUF will appear on Neutral Tandem's monthly bills for the previous month's usage in arrears. The charges are as set forth in Exhibit D to this Attachment.

5. The ODUF feed will contain both rated and unrated messages. All messages will be in the standard Alliance for Telecommunications Industry Solutions (ATIS) EMI record format.

5.1 Messages that error in the billing system of Neutral Tandem will be the responsibility of Neutral Tandem. If, however, Neutral Tandem should encounter significant volumes of errored messages that prevent processing by Neutral Tandem within its systems, BellSouth will work with Neutral Tandem to determine the source of the errors and the appropriate resolution.

6. ODUF Specifications

6.1 ODUF Message to be Transmitted

6.1.1 The following messages recorded by BellSouth will be transmitted to Neutral Tandem:

6.1.1.1 Message recording for per use/per activation type services (examples: Three Way Calling, Verify, Interrupt, Call Return, etc.)

6.1.1.2 Measured local calls

6.1.1.3 Directory Assistance messages

6.1.1.4 IntraLATA Toll

6.1.1.5 WATS and 800 Service

6.1.1.6 N11

6.1.1.7 Information Service Provider Messages

6.1.1.8 Operator Services Messages

6.1.1.9 Operator Services Message Attempted Calls

6.1.1.10 Credit/Cancel Records

6.1.1.11 Usage for Voice Mail Message Service

6.1.2 Rated Incollects (messages BellSouth receives from other revenue accounting offices) appear on ODUF. Rated Incollects will be intermingled with BellSouth recorded rated and unrated usage. Rated Incollects will not be packed separately.

6.1.3 BellSouth will perform duplicate record checks on records processed to ODUF. Any duplicate messages detected will be deleted and not sent to Neutral Tandem.

6.1.4 In the event that Neutral Tandem detects a duplicate on ODUF they receive from BellSouth, Neutral Tandem will drop the duplicate message and will not return the duplicate to BellSouth.

6.2 ODUF Physical File Characteristics

6.2.1 ODUF will be distributed to Neutral Tandem via Secure File Transfer Protocol (FTP). The ODUF feed will be a variable block format. The data on the ODUF feed will be in a non-compacted EMI format (175 byte format plus modules). It will be created on a daily basis Monday through Friday except holidays. Details such as dataset name and delivery schedule will be addressed during negotiations of the distribution medium. There will be a maximum of one dataset per workday per OCN. If BellSouth determines the Secure FTP Mailbox is nearing capacity levels, BellSouth may move the customer to CONNECT:Direct file delivery.

6.2.2 If the customer is moved, CONNECT:Direct data circuits (private line or dial-up) will be required between BellSouth and Neutral Tandem for the purpose of data transmission. Where a dedicated line is required, Neutral Tandem will be responsible for ordering the circuit, overseeing its installation and coordinating the installation with BellSouth. Neutral Tandem will also be responsible for any charges associated with this line. Equipment required on the BellSouth end to attach the line to the mainframe computer and to transmit messages successfully on an ongoing basis will be negotiated on an individual case basis. Any costs incurred for such equipment will be Neutral Tandem's responsibility. Where a dial-up facility is required, dial circuits will be installed in the BellSouth data center by BellSouth and the associated charges assessed to Neutral Tandem. Additionally, all message toll charges associated with the use of the dial circuit by Neutral Tandem will be the responsibility of Neutral Tandem.

Associated equipment on the BellSouth end, including a modem, will be negotiated on an individual case basis between the Parties. All equipment, including modems and software, that is required on Neutral Tandem end for the purpose of data transmission will be the responsibility of Neutral Tandem.

6.2.3 If Neutral Tandem utilizes FTP for data file transmission, purchase of the FTP software will be the responsibility of Neutral Tandem.

6.3 ODUF Packing Specifications

6.3.1 The data will be packed using ATIS EMI records. A pack will contain a minimum of one message record or a maximum of 99,999 message records plus a pack header record and a pack trailer record. One transmission can contain a maximum of 99 packs and a minimum of one pack.

6.3.2 The OCN, From RAO, and Invoice Number will control the invoice sequencing. The From RAO will be used to identify to Neutral Tandem which BellSouth RAO is sending the message. BellSouth and Neutral Tandem will use the invoice sequencing to control data exchange. BellSouth will be notified of sequence failures identified by Neutral Tandem and resend the data as appropriate.

6.4 ODUF Pack Rejection

6.4.1 Neutral Tandem will notify BellSouth within one business day of rejected packs (via the mutually agreed medium). Packs could be rejected because of pack sequencing discrepancies or a critical edit failure on the Pack Header or Pack Trailer records (e.g., out-of-balance condition on grand totals, invalid data populated). Standard ATIS EMI error codes will be used. Neutral Tandem will not be required to return the actual rejected data to BellSouth. Rejected packs will be corrected and retransmitted to Neutral Tandem by BellSouth.

6.5 ODUF Control Data

Neutral Tandem will send one confirmation record per pack that is received from BellSouth. This confirmation record will indicate Neutral Tandem's receipt of the pack and the acceptance or rejection of the pack. Pack Status Code(s) will be populated using standard ATIS EMI error codes for packs that were rejected by Neutral Tandem for reasons stated in the above section.

6.6 ODUF Testing

6.6.1 Upon request from Neutral Tandem, BellSouth shall send ODUF test files to Neutral Tandem. The Parties agree to review and discuss the ODUF file content and/or format. For testing of usage results, BellSouth shall request that Neutral Tandem set up a production (live) file. The live test may consist of Neutral Tandem’s employees

making test calls for the types of services Neutral Tandem requests on ODUF. These test calls are logged by Neutral Tandem, and the logs are provided to BellSouth. These logs will be used to verify the files. Testing will be completed within thirty (30) days from the date on which the initial test file was sent.

Enhanced Optional Daily Usage File

1. Upon written request from Neutral Tandem, BellSouth will provide the Enhanced Optional Daily Usage File (EODUF) service to Neutral Tandem pursuant to the terms and conditions set forth in this section. EODUF will only be sent to existing ODUF subscribers who request the EODUF option.

2. Neutral Tandem shall furnish all relevant information required by BellSouth for the provision of the EODUF.

3. The EODUF will provide usage data for local calls originating from resold Flat Rate Business and Residential Lines.

4. Charges for EODUF will appear on Neutral Tandem's monthly bills for the previous month's usage in arrears. The charges are as set forth in Exhibit D to this Attachment.

5. All messages will be in the standard Alliance for Telecommunications Industry Solutions (ATIS) EMI record format.

6. Messages that error in the billing system of Neutral Tandem will be the responsibility of Neutral Tandem. If, however, Neutral Tandem should encounter significant volumes of errored messages that prevent processing by Neutral Tandem within its systems, BellSouth will work with Neutral Tandem to determine the source of the errors and the appropriate resolution.

7. EODUF Specifications.

7.1 EODUF Usage To Be Transmitted

7.1.1 The following messages recorded by BellSouth will be transmitted to Neutral Tandem:

7.1.1.1 Customer usage data for flat rated local call originating from Neutral Tandem's End User lines (1FB or 1FR). The EODUF record for flat rate messages will include:

7.1.1.1.1 Date of Call

7.1.1.1.2 From Number

7.1.1.1.3 To Number

7.1.1.1.4 Connect Time

7.1.1.1.5 Conversation Time

7.1.1.1.6 Method of Recording

7.1.1.1.7 From RAO

7.1.1.1.8 Rate Class

7.1.1.1.9 Message Type

7.1.1.1.10 Billing Indicators

7.1.1.1.11 Bill to Number

7.1.2 BellSouth will perform duplicate record checks on EODUF records processed to O DUF. Any duplicate messages detected will be deleted and not sent to Neutral Tandem.

7.1.3 In the event that Neutral Tandem detects a duplicate on EODUF they receive from BellSouth, Neutral Tandem will drop the duplicate message and will not return the duplicate to BellSouth.

7.2 EODUF Physical File Characteristics

7.2.1 EODUF feed will be distributed to Neutral Tandem via Secure File Transfer Protocol (FTP). The EODUF messages will be intermingled among Neutral Tandem's Optional Daily Usage File (ODUF) messages. The EODUF will be a variable block format. The data on the EODUF will be in a non-compacted EMI format (175 byte format plus modules). It will be created on a daily basis Monday through Friday except holiday. If BellSouth determines the Secure FTP mailbox is nearing capacity levels, BellSouth may move the customer to CONNECT:Direct file delivery.

7.2.2 Data circuits (private line or dial-up) may be required between BellSouth and Neutral Tandem for the purpose of data transmission. Where a dedicated line is required, Neutral Tandem will be responsible for ordering the circuit, overseeing its installation and coordinating the installation with BellSouth. Neutral Tandem will also be responsible for any charges associated with this line. Equipment required on the BellSouth end to attach the line to the mainframe computer and to transmit successfully ongoing will be negotiated on an individual case basis. Where a dial-up facility is required, dial circuits will be installed in the BellSouth data center by BellSouth and the associated charges assessed to Neutral Tandem. Additionally, all message toll charges associated with the use of the dial circuit by

Neutral Tandem will be the responsibility of Neutral Tandem. Associated equipment on the BellSouth end, including a modem, will be negotiated on an individual case basis between the Parties. All equipment, including modems and software, that is required on Neutral Tandem's end for the purpose of data transmission will be the responsibility of Neutral Tandem.

7.2.3 If Neutral Tandem utilizes FTP for data file transmission, purchase of the FTP software will be the responsibility of Neutral Tandem.

7.3 EODUF Packing Specifications

7.3.1 The data will be packed using ATIS EMI records. A pack will contain a minimum of one message record or a maximum of 99,999 message records plus a pack header record and a pack trailer record. One transmission can contain a maximum of 99 packs and a minimum of one pack.

7.3.2 The OCN, From (RAO), and Invoice Number will control the invoice sequencing. The From RAO will be used to identify to Neutral Tandem which BellSouth RAO is sending the message. BellSouth and Neutral Tandem will use the invoice sequencing to control data exchange. BellSouth will be notified of sequence failures identified by Neutral Tandem and resend the data as appropriate.

Resale Discounts & Rates - Florida														Attachment: 1		Exhibit: D	
CATEGORY		RATE ELEMENTS	Interim	Zone	BCS	USOC	RATES($)					Svc Order Submitted Elec per LSR	Svc Order Submitted Manually per LSR	Incremental Charge - Manual Svc Order vs. Electronic-1st	Incremental Charge - Manual Svc Order vs. Electronic-Add'l	Incremental Charge - Manual Svc Order vs. Electronic-Disc 1st	Incremental Charge - Manual Svc Order vs. Electronic-Disc Add'l
							Rec	Nonrecurring		Nonrecurring Disconnect		OSS Rates($)					
								First	Add'l	First	Add'l	SOMEC	SOMAN	SOMAN	SOMAN	SOMAN	SOMAN
APPLICABLE DISCOUNTS																	
		Residence %					21.83										
		Business %					16.81										
		CSAs %					16.81										
OPERATIONS SUPPORT SYSTEMS (OSS) - "REGIONAL RATES"																	
	NOTE: (1) CLEC should contact its contract negotiator if it prefers the "state specific" OSS charges as ordered by the State Commissions. The OSS charges currently contained in this rate exhibit are the BellSouth "regional" service ordering charges. CLEC may elect either the state specific Commission ordered rates for the service ordering charges, or CLEC may elect the regional service ordering charge, however, CLEC can not obtain a mixture of the two regardless if CLEC has a interconnection contract established in each of the 9 states.															
		OSS - Electronic Service Order Charge, Per Local Service Request (LSR) - Resale Only				SOMEC		3.50	0.00	3.50	0.00						
		OSS - Manual Service Order Charge, Per Local Service Request (LSR) - Resale Only				SOMAN		19.99	0.00	19.99	0.00						
SELECTIVE CALL ROUTING USING LINE CLASS CODES (SCR-LCC)																	
		Selective Routing Per Unique Line Class Code Per Request Per Switch						93.55	93.55	12.71	12.71						
ODUF/EODUF SERVICES																	
	OPTIONAL DAILY USAGE FILE (ODUF)																
		ODUF: Recording, per message					0.0000071										
		ODUF: Message Processing, per message					0.002146										
		ODUF: Message Processing, per Magnetic Tape provisioned					35.91										
		ODUF: Data Transmission (CONNECT:DIRECT), per message					0.00010375										
	ENHANCED OPTIONAL DAILY USAGE FILE (EODUF)																
		EODUF: Message Processing, per message					0.080698										

Resale Discounts & Rates - Georgia														Attachment: 1		Exhibit: D	
CATEGORY		RATE ELEMENTS	Interim	Zone	BCS	USOC	RATES($)					Svc Order Submitted Elec per LSR	Svc Order Submitted Manually per LSR	Incremental Charge - Manual Svc Order vs. Electronic-1st	Incremental Charge - Manual Svc Order vs. Electronic-Add'l	Incremental Charge - Manual Svc Order vs. Electronic-Disc 1st	Incremental Charge - Manual Svc Order vs. Electronic-Disc Add'l
							Rec	Nonrecurring		Nonrecurring Disconnect		OSS Rates($)					
								First	Add'l	First	Add'l	SOMEC	SOMAN	SOMAN	SOMAN	SOMAN	SOMAN
APPLICABLE DISCOUNTS																	
		Residence %					20.30										
		Business %					17.30										
		CSAs %					17.30										
OPERATIONS SUPPORT SYSTEMS (OSS) - "REGIONAL RATES"																	
	NOTE: (1) CLEC should contact its contract negotiator if it prefers the "state specific" OSS charges as ordered by the State Commissions. The OSS charges currently contained in this rate exhibit are the BellSouth "regional" service ordering charges. CLEC may elect either the state specific Commission ordered rates for the service ordering charges, or CLEC may elect the regional service ordering charge, however, CLEC can not obtain a mixture of the two regardless if CLEC has a interconnection contract established in each of the 9 states.															
		OSS - Electronic Service Order Charge, Per Local Service Request (LSR) - Resale Only				SOMEC		3.50	0.00	3.50	0.00						
		OSS - Manual Service Order Charge, Per Local Service Request (LSR) - Resale Only				SOMAN		19.99	0.00	19.99	0.00						
SELECTIVE CALL ROUTING USING LINE CLASS CODES (SCR-LCC)																	
		Selective Routing Per Unique Line Class Code Per Request Per Switch						102.19	61.15	12.68	6.34						
ODUF/EODUF SERVICES																	
	OPTIONAL DAILY USAGE FILE (ODUF)																
		ODUF: Recording, per message					0.0000068										
		ODUF: Message Processing, per message					0.002167										
		ODUF: Message Processing, per Magnetic Tape provisioned					36.06										
		ODUF: Data Transmission (CONNECT:DIRECT), per message					0.00010856										
	ENHANCED OPTIONAL DAILY USAGE FILE (EODUF)																
		EODUF: Message Processing, per message					0.227409										

Attachment 2

Network Elements and Other Services

for

New CLECs

TABLE OF CONTENTS

1 INTRODUCTION 3

2 LOOPS 7

3 LINE SPLITTING 24

4 UNBUNDLED NETWORK ELEMENT COMBINATIONS 25

5 TRANSPORT 26

6 CALL RELATED DATABASES 27

7 WHITE PAGES LISTINGS 30

Rates ..... Exhibit A

ACCESS TO NETWORK ELEMENTS AND OTHER SERVICES

1 Introduction

1.1 This Attachment sets forth rates, terms and conditions for unbundled network elements (Network Elements) and combinations of Network Elements (Combinations) that BellSouth agrees to offer to Neutral Tandem in accordance with its obligations under Section 251(c)(3) of the Act. Additionally, this Attachment sets forth the rates, terms and conditions for other facilities and services BellSouth makes available to Neutral Tandem (Other Services). Additionally, the provision of a particular Network Element or Other Service may require Neutral Tandem to purchase other Network Elements or services. In the event of a conflict between this Attachment and any other section or provision of this Agreement, the provisions of this Attachment shall control.

1.2 The rates for each Network Element, Combinations and Other Services are set forth in Exhibit A of this Attachment. If no rate is identified in this Agreement, the rate will be as set forth in the applicable BellSouth tariff or as negotiated by the Parties upon request by either Party. If Neutral Tandem purchases a service(s) from a tariff, all terms and conditions and rates as set forth in such tariff shall apply. A one-month minimum billing period shall apply to all Network Elements, Combinations and Other Services.

1.3 BellSouth shall, upon request of Neutral Tandem, and to the extent technically feasible, provide to Neutral Tandem access to its Network Elements for the provision of Neutral Tandem's qualifying services. Neutral Tandem may not access a Network Element for the sole purpose of providing non-qualifying services as defined by the FCC.

1.4 Neutral Tandem may purchase and use Network Elements from BellSouth in accordance with 47 C.F.R 51.309.

1.5 The Parties shall comply with the requirements as set forth in the technical references within this Attachment 2.

1.6 In the event that any Network Element, Combination or Other Service is no longer required to be offered by BellSouth pursuant to Section 251 of the Act (Eliminated Elements), Neutral Tandem shall upon notice from BellSouth immediately transition such Eliminated Elements pursuant to Sections 1.6.1 and 1.6.2 below to either Resale, tariffed services or services offered pursuant to a separate agreement negotiated between the parties (collectively "Comparable Services").

1.6.1 In the event that Neutral Tandem has not entered into a separate agreement for the provision of Eliminated Elements, Neutral Tandem will submit orders to either disconnect such Eliminated Elements or transition such Eliminated Elements to

Resale or tariff services as BellSouth deems appropriate within thirty (30) days of notice from BellSouth. If Neutral Tandem submits orders to transition such Eliminated Elements to Comparable Services within thirty (30) days of notice, applicable recurring and nonrecurring charges shall apply as set forth in the appropriate BellSouth tariff, subject to the appropriate discounts described in Attachment 1 of this Agreement, if applicable, as of the date the order is completed. If Neutral Tandem fails to submit orders within thirty (30) days of the notice from BellSouth, BellSouth shall transition such Eliminated Elements to Comparable Services as applicable, and Neutral Tandem shall pay the applicable nonrecurring and recurring charges as set forth in the appropriate BellSouth tariff, subject to the appropriate discounts described in Attachment 1 of this Agreement, if applicable, as of the date of BellSouth's notice. In such case, Neutral Tandem shall reimburse BellSouth for labor incurred in identifying and transitioning the Eliminated Elements. If no equivalent Comparable Service exists, then BellSouth may disconnect such Eliminated Elements if Neutral Tandem does not submit such orders within thirty (30) days of notice. In all cases, until Eliminated Elements have been transitioned to Comparable Services or disconnected pursuant to this Agreement, such Eliminated Elements will be provided pursuant to the rates, terms and conditions applicable to the subject Eliminated Elements as set forth in this Agreement. Applicable nonrecurring disconnect charges may apply for disconnection of service or transition to Comparable Services.

1.6.2 Where Neutral Tandem requests to transition a minimum of fifteen (15) Network Elements per state, Neutral Tandem may submit orders in accordance with the guidelines set forth in the Ordering Guidelines and Processes and CLEC Information Packages on the BellSouth Interconnection Services Web site as referenced in Sections 1.12 and 1.12. 1 below. In all other cases, Neutral Tandem must submit such orders pursuant to the local service request/access service request (LSR/ASR) process, dependent on the Comparable Service elected. For such transitions, the nonrecurring and recurring charges shall be those set forth in BellSouth's FCC No. 1 Tariff, or as otherwise agreed to in a separately negotiated agreement.

1.7 Conversion of Wholesale Services to Network Elements or Network Elements to Wholesale Services. Upon request, BellSouth shall convert a wholesale service, or group of wholesale services, to the equivalent Network Element or Combination that is available to Neutral Tandem pursuant to Section 251 of the Act and under this Agreement or convert a Network Element or Combination that is available to Neutral Tandem pursuant to Section 251 of the Act and under this Agreement to an equivalent wholesale service or group of wholesale services offered by BellSouth (collectively "Conversion"). BellSouth shall charge the applicable non-recurring switch-as-is rates for Conversions to specific Network Elements or Combinations found in Exhibit A. BellSouth shall also charge the same non-recurring switch-as-is rates when converting from Network Elements or Combinations. Any rate change resulting from the Conversion will be effective as

of the next billing cycle following BellSouth's receipt of a complete and accurate Conversion request from Neutral Tandem. A Conversion shall be considered termination for purposes of any volume and/or term commitments and/or grandfathered status between Neutral Tandem and BellSouth. Any change from a wholesale service/group of wholesale services to a Network Element/Combination, or from a Network Element/Combination to a wholesale service/group of wholesale services, that requires a physical rearrangement will not be considered to be a Conversion for purposes of this Agreement. BellSouth will not require physical rearrangements if the Conversion can be completed through record changes only. Orders for Conversions will be handled in accordance with the guidelines set forth in the Ordering Guidelines and Processes and CLEC Information Packages as referenced in Sections 1.12 and 1.12.1 below.

1.8 Neutral Tandem may utilize Network Elements, Combinations and Other Services to provide services as long as such use is consistent with industry standards and applicable BellSouth Technical References.

1.9 BellSouth will perform Routine Network Modifications (RNM) in accordance with FCC 47 C.F.R. § 51.319 (a)(8) and (e)(5) for Loops and Dedicated Transport provided under this Attachment. If BellSouth has anticipated such RNM and performs them during normal operations and has recovered the costs for performing such modifications through the rates set forth in Exhibit A of this Attachment, then BellSouth shall perform such RNM at no additional charge. RNM shall be performed within the intervals established for the Network Element and subject to the performance measurements and associated remedies set forth in Attachment 9 to the extent such RNM were anticipated in the setting of such intervals. If BellSouth has not anticipated a requested network modification as being a RNM and has not recovered the costs of such RNM in the rates set forth in Exhibit A of this Attachment, then such request will be handled as a project on an individual case basis. BellSouth will provide a price quote for the request and, upon receipt of payment from Neutral Tandem, BellSouth shall perform the RNM.

1.10 Commingling of Services. Commingling means the connecting, attaching, or otherwise linking of a Network Element, or a Combination, to one or more Telecommunications Services or facilities that Neutral Tandem has obtained at wholesale from BellSouth, or the combining of a Network Element or Combination with one or more such wholesale Telecommunications Services or facilities. Neutral Tandem must comply with all rates, terms or conditions applicable to such wholesale Telecommunications Services or facilities.

1.10.1 Subject to the limitations set forth elsewhere in this Attachment, BellSouth shall not deny access to a Network Element or a Combination on the grounds that one or more of the elements: 1) is connected to, attached to, linked to, or combined with such a facility or service obtained from BellSouth; or 2) shares part of BellSouth's network with access services or inputs for non-qualifying services.

1.10.2 Unless otherwise agreed to by the Parties, the Network Element portion of a commingled circuit will be billed at the rates set forth in this Agreement and the remainder of the circuit or service will be billed in accordance with BellSouth's tariffed rates or rates set forth in a separate agreement between the Parties.

1.10.3 When multiplexing equipment is attached to a commingled arrangement, the multiplexing equipment will be billed from the same agreement or tariff as the higher bandwidth circuit. Central Office Channel Interfaces (COCI) will be billed from the same agreement or tariff as the lower bandwidth circuit.

1.11 Notwithstanding any other provision of this Agreement, BellSouth shall not be obligated to commingle or combine Network Elements or Combinations with any service, network element or other offering that it is obligated to make available only pursuant to Section 271 of the Act.

1.12 Ordering Guidelines and Processes. For information regarding Ordering Guidelines and Processes for various Network Elements, Combinations and Other Services, Neutral Tandem should refer to the "Guides" section of the BellSouth Interconnection Web site, which is incorporated herein by reference, as amended from time to time. The Web site address is: http//www.interconnection.bellsouth.com/.

1.12.1 Additional information may also be found in the individual CLEC Information Packages, as amended from time to time and which are incorporated herein by reference, located at the "CLEC UNE Products" Web site at the following address: http://www.interconnection.bellsouth.com/guides/html/unes.html.

1.12.2 The provisioning of Network Elements, Combinations and Other Services to Neutral Tandem's Collocation Space will require cross-connections within the central office to connect the Network Element, Combinations or Other Services to the demarcation point associated with Neutral Tandem's Collocation Space. These cross-connects are separate components that are not considered a part of the Network Element, Combinations or Other Services and, thus, have a separate charge pursuant to the Collocation Attachment of this Agreement.

1.12.3 Testing/Trouble Reporting. Neutral Tandem will be responsible for testing and isolating troubles on Network Elements. Neutral Tandem must test and isolate trouble to the BellSouth network before reporting the trouble to the UNE Customer Wholesale Interconnection Network Services (CWINS) Center. Upon request from BellSouth at the time of the trouble report, Neutral Tandem will be required to provide the results of the Neutral Tandem test which indicate a problem on the BellSouth network.

1.12.3.1 Once Neutral Tandem has isolated a trouble to the BellSouth network, and has issued a trouble report to BellSouth, BellSouth will take the actions necessary to

repair the Network Element when trouble is found. BellSouth will repair its network facilities to its Wholesale customers in the same time frames that BellSouth repairs similar services to its retail End Users.

1.12.3.2 If Neutral Tandem reports a trouble on a BellSouth Network Element and no trouble is found in BellSouth's network, BellSouth will charge Neutral Tandem a Maintenance of Service Charge for any dispatching and testing (both inside and outside the CO) required by BellSouth in order to confirm the Network Element's working status. BellSouth will assess the applicable Maintenance of Service rates from BellSouth's FCC No.1 Tariff, Section 13.3.1.

1.12.3.3 In the event BellSouth must dispatch to the End User's location more than once due to incorrect or incomplete information provided by Neutral Tandem (e.g., incomplete address, incorrect contact name/number, etc.), BellSouth will bill Neutral Tandem for each additional dispatch required to repair the Network Element due to the incorrect/incomplete information provided. BellSouth will assess the applicable Maintenance of Service rates from BellSouth's FCC No.1 Tariff, Section 13.3.1.

2 Loops

2.1 General. The local loop Network Element is defined as a narrowband transmission facility (i.e., below the DS1 level) that BellSouth provides pursuant to this Attachment between a distribution frame (or its equivalent) in BellSouth's central office and the Loop demarcation point at an End User (Loop). Facilities that do not terminate at a demarcation point at an End User premises, including, by way of example, but not limited to, facilities that terminate to another carrier's switch or premises, a cell site, Mobile Switching Center or base station, do not constitute local Loops. The Loop Network Element includes all features, functions, and capabilities of the transmission facilities, including the network interface device, and attached electronics (except those used for the provision of advanced services, such as Digital Subscriber Line Access Multiplexers), optronics and intermediate devices (including repeaters and load coils) used to establish the transmission path to the End User premises, including inside wire owned or controlled by BellSouth. Neutral Tandem shall purchase the entire bandwidth of the Loop and, except as required herein or as otherwise agreed to by the Parties, BellSouth shall not subdivide the frequency of the Loop.

2.1.2 The Loop does not include any packet switched features, functions or capabilities.

2.1.3 Fiber to the Home (FTTH) loops are local loops consisting entirely of fiber optic cable, whether dark or lit, serving an End User's premises or, in the case of predominantly residential multiple dwelling units (MDUs), a fiber optic cable, whether dark or lit, that extends to the MDU minimum point of entry (MPOE). Fiber to the Curb (FTTC) loops are local loops consisting of fiber optic cable

connecting to a copper distribution plant that is not more than 500 feet from the End User's premises or, in the case of predominantly residential MDUs, not more than 500 feet from the MDU's MPOE. The fiber optic cable in a FTTC loop must connect to a copper distribution plant at a serving area interface from which every other copper distribution subloop also is not more than 500 feet from the respective End User's premises.

2.1.3.1 In new build (Greenfield) areas, where BellSouth has only deployed Fiber To The Home (FTTH) facilities, BellSouth is under no obligation to provide Loops. FTTH facilities include fiber loops deployed to the minimum point of entry (MPOE) of a multiple dwelling unit (MDU) that is predominantly residential regardless of the ownership of the inside wiring from the MPOE to each End User in the MDU.

2.1.3.2 In FTTH/FTTC overbuild situations where BellSouth also has copper Loops, BellSouth will make those copper Loops available to Neutral Tandem on an unbundled basis, until such time as BellSouth chooses to retire those copper Loops using the FCC's network disclosure requirements. In these cases, BellSouth will offer a 64 kbps second voice grade channel over its FTTH/FTTC facilities.

2.1.3.3 Furthermore, in FTTH/FTTC overbuild areas where BellSouth has not yet retired copper facilities, BellSouth is not obligated to ensure that such copper Loops in that area are capable of transmitting signals prior to receiving a request for access to such Loops by Neutral Tandem. If a request is received by BellSouth for a copper Loop, and the copper facilities have not yet been retired, BellSouth will restore the copper Loop to serviceable condition if technically feasible. In these instances of Loop orders in an FTTH/FTTC overbuild area, BellSouth's standard Loop provisioning interval will not apply, and the order will be handled on a project basis by which the Parties will negotiate the applicable provisioning interval.

2.1.4 A hybrid Loop is a local Loop, composed of both fiber optic cable, usually in the feeder plant, and copper twisted wire or cable, usually in the distribution plant. BellSouth shall provide Neutral Tandem with nondiscriminatory access to the time division multiplexing features, functions and capabilities of such hybrid Loop, on an unbundled basis to establish a complete transmission path between BellSouth's central office and an End User's premises.

2.1.5 Neutral Tandem may not purchase Loops or convert Special Access circuits to Loops if such Loops will be used to provide wireless telecommunications services.

2.1.6 Where facilities are available, BellSouth will install Loops in compliance with BellSouth's Products and Services Interval Guide available at BellSouth's Web site at http://www.interconnection.bellsouth.com. For orders of fifteen (15) or more Loops, the installation and any applicable Order Coordination as described below

will be handled on a project basis, and the intervals will be set by the BellSouth project manager for that order. When Loops require a Service Inquiry (SI) prior to issuing the order to determine if facilities are available, the interval for the SI process is separate from the installation interval.

2.1.7 The Loop shall be provided to Neutral Tandem in accordance with BellSouth's TR73600 Unbundled Local Loop Technical Specification and applicable industry standard technical references.

2.1.8 BellSouth will only provision, maintain and repair the Loops to the standards that are consistent with the type of Loop ordered.

2.1.9 When a BellSouth technician is required to be dispatched to provision the Loop, BellSouth will tag the Loop with the Circuit ID number and the name of the ordering CLEC. When a dispatch is not required to provision the Loop, BellSouth will tag the Loop on the next required visit to the End User's location. If Neutral Tandem wants to ensure the Loop is tagged during the provisioning process for Loops that may not require a dispatch (e.g. UVL-SL1, UVL-SL2, and UCL-ND), Neutral Tandem may order Loop Tagging. Rates for Loop Tagging are as set forth in Exhibit A of this Attachment.

2.1.10 For voice grade Loop orders (or orders for Loops intended to provide voice grade services), Neutral Tandem shall have dial-tone available for that Loop 48 hours prior to the Loop order completion due date.

2.1.11 Order Coordination and Order Coordination-Time Specific. "Order Coordination" (OC) allows BellSouth and Neutral Tandem to coordinate the installation of the SL2 Loops, Unbundled Digital Loops (UDL) and other Loops where OC may be purchased as an option, to Neutral Tandem's facilities to limit End User service outage. OC is available when the Loop is provisioned over an existing circuit that is currently providing service to the End User. OC for physical conversions will be scheduled at BellSouth's discretion during normal working hours on the committed due date. OC shall be provided in accordance with the chart set forth below.

2.1.11.1 "Order Coordination – Time Specific" (OC-TS) allows Neutral Tandem to order a specific time for OC to take place. BellSouth will make commercially reasonable efforts to accommodate Neutral Tandem's specific conversion time request. However, BellSouth reserves the right to negotiate with Neutral Tandem a conversion time based on load and appointment control when necessary. This OC-TS is a chargeable option for all Loops except Unbundled Copper Loops (UCL) and is billed in addition to the OC charge. Neutral Tandem may specify a time between 9:00 a.m. and 4:00 p.m. (location time) Monday through Friday (excluding holidays). If Neutral Tandem specifies a time outside this window, or selects a time or quantity of Loops that requires BellSouth technicians to work

outside normal work hours, overtime charges will apply in addition to the OC and OC-TS charges. Overtime charges will be applied based on the amount of overtime worked and in accordance with the rates established in the Access Services Tariff, Section E13.2, for each state. The OC-TS charges for an order due on the same day at the same location will be applied on a per Local Service Request (LSR) basis.

2.1.12

	Order Coordination (OC)	**Order Coordination – Time Specific (OC-TS)**	**Test Points**	**DLR**	**Charge for Dispatch and Testing if No Trouble Found**
SL-1 **(Non-Designed)**	Chargeable Option	Chargeable Option	Not available	Chargeable Option – ordered as Engineering Information Document	Charged for Dispatch inside and outside Central Office
UCL-ND **(Non-Designed)**	Chargeable Option	Not Available	Not Available	Chargeable Option – ordered as Engineering Information Document	Charged for Dispatch inside and outside Central Office
Unbundled Voice Loops - SL-2 (including 2- and 4-wire UVL) (Designed)	Included	Chargeable Option	Included	Included	Charged for Dispatch outside Central Office
Unbundled Digital Loop (Designed)	Included	Chargeable Option	Included (where appropriate)	Included	Charged for Dispatch outside Central Office
Unbundled Copper Loop (Designed)	Chargeable in accordance with Section 2	Not available	Included	Included	Charged for Dispatch outside Central Office
For UVL-SL1 and UCLs, Neutral Tandem must order and will be billed for both OC and OC-TS if requesting OC-TS.					

2.1.13 <u>CLEC to CLEC Conversions for Unbundled Loops.</u> The CLEC to CLEC conversion process for Loops may be used by Neutral Tandem when converting an

existing Loop from another CLEC for the same End User. Such process is set forth on BellSouth's Interconnection Web site at: http://www.interconnection.bellsouth.com/guides/html/unes.html. The Loop type being converted must be included in Neutral Tandem's Interconnection Agreement before requesting a conversion.

2.1.13.1 To utilize the CLEC to CLEC conversion process, the Loop being converted must be the same Loop type with no requested changes to the Loop, must serve the same End User location from the same serving wire center, and must not require an outside dispatch to provision.

2.1.13.2 The Loops converted to Neutral Tandem pursuant to the CLEC to CLEC conversion process shall be provisioned in the same manner and with the same functionality and options as described in this Attachment for the specific Loop type.

2.1.14 Bulk Migration. BellSouth will make available to Neutral Tandem a Bulk Migration process pursuant to which Neutral Tandem may request to migrate port/loop combinations, provisioned pursuant to a separate agreement between the parties, to Loops (UNE-L). The Bulk Migration process may be used if such loop/port combinations are (1) associated with 2 or more Existing Account Telephone Numbers (EATNs); and (2) located in the same Central Office. The terms and conditions for use of the Bulk Migration process are described in the BellSouth CLEC Information Package, incorporated herein by reference as it may be amended from time to time. The CLEC Information Package is located at www.interconnection.bellsouth.com/guides/html/unes.html. The rates for the Bulk Migration process shall be the nonrecurring rates associated with the Loop type being requested on the Bulk Migration, as set forth in Exhibit A of this Attachment. Additionally, OSS charges will also apply. Loops connected to Integrated Digital Loop Carrier (IDLC) systems will be migrated pursuant to Section 2.6 of this Attachment.

2.1.14.1 Should Neutral Tandem request migration for two (2) or more EATNs containing fifteen (15) or more circuits, Neutral Tandem must use the Bulk Migration process referenced in 2.1.14 above.

2.2 Unbundled Voice Loops (UVLs). BellSouth shall make available the following UVLs:

2.2.1 2-wire Analog Voice Grade Loop – SL1 (Non-Designed)

2.2.1.1 2-wire Analog Voice Grade Loop – SL2 (Designed)

2.2.1.2 4-wire Analog Voice Grade Loop (Designed)

2.2.2 Unbundled Voice Loops (UVL) may be provisioned using any type of facility that will support voice grade services. This may include loaded copper, non-loaded

copper, digital loop carrier systems, fiber/copper combination (hybrid Loop) or a combination of any of these facilities. BellSouth, in the normal course of maintaining, repairing, and configuring its network, may also change the facilities that are used to provide any given voice grade circuit. This change may occur at any time. In these situations, BellSouth will only ensure that the newly provided facility will support voice grade services. BellSouth will not guarantee that Neutral Tandem will be able to continue to provide any advanced services over the new facility. BellSouth will offer UVL in two different service levels - Service Level One (SL1) and Service Level Two (SL2).

2.2.3 Unbundled Voice Loop - SL1 (UVL-SL1) Loops are 2-wire Loop start circuits, will be non-designed, and will not have remote access test points. OC will be offered as a chargeable option on SL1 Loops when reuse of existing facilities has been requested by Neutral Tandem, however, OC is always required on UCLs that involve the reuse of facilities that are currently providing service. Neutral Tandem may also order OC-TS when a specified conversion time is requested. OC-TS is a chargeable option for any coordinated order and is billed in addition to the OC charge. An Engineering Information (EI) document can be ordered as a chargeable option. The EI document provides Loop Make-Up information which is similar to the information normally provided in a Design Layout Record (DLR). Upon issuance of a non-coordinated order in the service order system, SL1 Loops will be activated on the due date in the same manner and time frames that BellSouth normally activates POTS-type Loops for its End Users.

2.2.4 For an additional charge BellSouth will make available Loop Testing so that Neutral Tandem may request further testing on new UVL-SL1 Loops. Rates for Loop Testing are as set forth in Exhibit A of this Attachment.

2.2.5 Unbundled Voice Loop – SL2 (UVL-SL2) Loops may be 2-wire or 4-wire circuits, shall have remote access test points, and will be designed with a DLR provided to Neutral Tandem. SL2 circuits can be provisioned with loop start, ground start or reverse battery signaling. OC is provided as a standard feature on SL2 Loops. The OC feature will allow Neutral Tandem to coordinate the installation of the Loop with the disconnect of an existing customer's service and/or number portability service. In these cases, BellSouth will perform the order conversion with standard order coordination at its discretion during normal work hours.

2.3 Unbundled Digital Loops. BellSouth will offer Unbundled Digital Loops (UDL). UDLs are service specific, will be designed, will be provisioned with test points (where appropriate), and will come standard with OC and a DLR. The various UDLs are intended to support a specific digital transmission scheme or service.

2.3.1 BellSouth shall make available the following UDLs, subject to restrictions set forth herein:

2.3.1.1 2-wire Unbundled ISDN Digital Loop

2.3.1.2 2-wire Unbundled ADSL Compatible Loop

2.3.1.3 2-wire Unbundled HDSL Compatible Loop

2.3.1.4 4-wire Unbundled HDSL Compatible Loop

2.3.1.5 4-wire Unbundled Digital Loop/DS0 – 64 kbps, 56 kbps and below

2.3.2 2-Wire Unbundled ISDN Digital Loops will be provisioned according to industry standards for 2-Wire Basic Rate ISDN services and will come standard with a test point, OC, and a DLR. Neutral Tandem will be responsible for providing BellSouth with a Service Profile Identifier (SPID) associated with a particular ISDN-capable Loop and End User. With the SPID, BellSouth will be able to adequately test the circuit and ensure that it properly supports ISDN service.

2.3.3 2-Wire ADSL-Compatible Loop. This is a designed Loop that is provisioned according to Revised Resistance Design (RRD) criteria and may be up to 18,000 feet long and may have up to 6,000 feet of bridged tap (inclusive of Loop length). The Loop is a 2-wire circuit and will come standard with a test point, OC, and a DLR.

2.3.4 2-Wire or 4-Wire HDSL-Compatible Loop. This is a designed Loop that meets Carrier Serving Area (CSA) specifications, may be up to 12,000 feet long and may have up to 2,500 feet of bridged tap (inclusive of Loop length). It may be a 2-wire or 4-wire circuit and will come standard with a test point, OC, and a DLR.

2.3.5 4-Wire Unbundled Digital/DS0 Loop. These are designed 4-wire Loops that may be configured as 64kbps, 56kbps, 19kbps, and other sub-rate speeds associated with digital data services and will come standard with a test point, OC, and a DLR.

2.4 Unbundled Copper Loops (UCL). BellSouth shall make available Unbundled Copper Loops (UCLs). The UCL is a copper twisted pair Loop that is unencumbered by any intervening equipment (e.g., filters, load coils, range extenders, digital loop carrier, or repeaters) and is not intended to support any particular telecommunications service. The UCL will be offered in two types – Designed and Non-Designed.

2.4.1 Unbundled Copper Loop – Designed (UCL-D). The UCL-D will be provisioned as a dry copper twisted pair (2- or 4-wire) Loop that is unencumbered by any intervening equipment (e.g., filters, load coils, range extenders, digital loop carrier, or repeaters).

2.4.1.1 A UCL-D will be 18,000 feet or less in length and is provisioned according to Resistance Design parameters, may have up to 6,000 feet of bridged tap and will have up to 1300 Ohms of resistance.

2.4.1.2 The UCL-D is a designed circuit, is provisioned with a test point, and comes standard with a DLR. OC is a chargeable option for a UCL-D; however, OC is always required on UCLs where a reuse of existing facilities has been requested by Neutral Tandem.

2.4.1.3 These Loops are not intended to support any particular services and may be utilized by Neutral Tandem to provide a wide-range of telecommunications services as long as those services do not adversely affect BellSouth's network. This facility will include a Network Interface Device (NID) at the End User's location for the purpose of connecting the Loop to the End User's inside wire.

2.4.2 Unbundled Copper Loop – Non-Designed (UCL-ND). The UCL–ND is provisioned as a dedicated 2-wire metallic transmission facility from BellSouth's Main Distribution Frame (MDF) to an End User's premises (including the NID). The UCL-ND will be a "dry copper" facility in that it will not have any intervening equipment such as load coils, repeaters, or digital access main lines (DAMLs), and may have up to 6,000 feet of bridged tap between the End User's premises and the serving wire center. The UCL-ND typically will be 1300 Ohms resistance and in most cases will not exceed 18,000 feet in length, although the UCL-ND will not have a specific length limitation. For Loops less than 18,000 feet and with less than 1300 Ohms resistance, the Loop will provide a voice grade transmission channel suitable for Loop start signaling and the transport of analog voice grade signals. The UCL-ND will not be designed and will not be provisioned with either a DLR or a test point.

2.4.2.1 The UCL-ND facilities may be mechanically assigned using BellSouth's assignment systems. Therefore, the Loop Makeup (LMU) process is not required to order and provision the UCL-ND. However, Neutral Tandem can request LMU for which additional charges would apply.

2.4.2.2 For an additional charge, BellSouth also will make available Loop Testing so that Neutral Tandem may request further testing on the UCL-ND. Rates for Loop Testing are as set forth in Exhibit A of this Attachment.

2.4.2.3 UCL-ND Loops are not intended to support any particular service and may be utilized by Neutral Tandem to provide a wide-range of telecommunications services as long as those services do not adversely affect BellSouth's network. The UCL-ND will include a NID at the End User's location for the purpose of connecting the Loop to the End User's inside wire.

2.4.2.4 OC will be provided as a chargeable option and may be utilized when the UCL-ND provisioning is associated with the reuse of BellSouth facilities. OC-TS does not apply to this product.

2.4.2.5 Neutral Tandem may use BellSouth's Unbundled Loop Modification (ULM) offering to remove excessive bridged taps and/or load coils from any copper Loop within the BellSouth network. Therefore, some Loops that would not qualify as UCL-ND could be transformed into Loops that do qualify, using the ULM process.

2.5 Unbundled Loop Modifications (Line Conditioning). Line Conditioning is defined as routine network modification that BellSouth regularly undertakes to provide xDSL services to its own End Users. This may include the removal of any device, from a copper Loop or copper Subloop that may diminish the capability of the Loop or Subloop to deliver high-speed switched wireline telecommunications capability, including xDSL service. Such devices include, load coils, excessive bridged taps, low pass filters, and range extenders. Excessive bridged taps are bridged taps that serves no network design purpose and that are beyond the limits set according to industry standards and/or the BellSouth TR 73600.

2.5.1 BellSouth will remove load coils only on copper Loops and subloops that are 18,000 feet in length or less.

2.5.2 For any copper Loop being ordered by Neutral Tandem which has over 6,000 feet of combined bridged tap will be modified, upon request from Neutral Tandem, so that the Loop will have a maximum of 6,000 feet of bridged tap. This modification will be performed at no additional charge to Neutral Tandem. Loop conditioning orders that require the removal of bridged tap that serves no network design purpose on a copper Loop that will result in a combined total of bridged tap between 2,500 and 6,000 feet will be performed at the rates set forth in Exhibit A of this Attachment.

2.5.3 Neutral Tandem may request removal of any unnecessary and non-excessive bridged tap (bridged tap between 0 and 2,500 feet which serves no network design purpose), at rates pursuant to BellSouth's Special Construction Process as mutually agreed to by the Parties.

2.5.4 Rates for ULM are as set forth in Exhibit A of this Attachment.

2.5.5 BellSouth will not modify a Loop in such a way that it no longer meets the technical parameters of the original Loop type (e.g., voice grade, ADSL, etc.) being ordered.

2.5.6 If Neutral Tandem requests ULM on a reserved facility for a new Loop order, BellSouth may perform a pair change and provision a different loop facility in lieu of the reserved facility with ULM if feasible. The Loop provisioned will meet or

exceed specifications of the requested Loop facility as modified. Neutral Tandem will not be charged for ULM if a different Loop is provisioned. For Loops that require a DLR or its equivalent, BellSouth will provide LMU detail of the Loop provisioned.

2.5.7 Neutral Tandem shall request Loop makeup information pursuant to this Attachment prior to submitting a service inquiry and/or a LSR for the Loop type that Neutral Tandem desires BellSouth to condition.

2.5.8 When requesting ULM for a Loop that BellSouth has previously provisioned for Neutral Tandem, Neutral Tandem will submit a service inquiry to BellSouth. If a spare Loop facility that meets the Loop modification specifications requested by Neutral Tandem is available at the location for which the ULM was requested, Neutral Tandem will have the option to change the Loop facility to the qualifying spare facility rather than to provide ULM. In the event that BellSouth changes the Loop facility in lieu of providing ULM, Neutral Tandem will not be charged for ULM but will only be charged the service order charges for submitting an order.

2.6 Loop Provisioning Involving Integrated Digital Loop Carriers. Where Neutral Tandem has requested an Unbundled Loop and BellSouth uses IDLC systems to provide the local service to the End User and BellSouth has a suitable alternate facility available, BellSouth will make such alternative facilities available to Neutral Tandem. If a suitable alternative facility is not available, then to the extent it is technically feasible, BellSouth will implement one of the following alternative arrangements for Neutral Tandem (e.g. hairpinning):

1. Roll the circuit(s) from the IDLC to any spare copper that exists to the End User premises.
2. Roll the circuit(s) from the IDLC to an existing DLC that is not integrated.
3. If capacity exists, provide "side-door" porting through the switch.
4. If capacity exists, provide "Digital Access Cross-Connect System (DACS)-door" porting (if the IDLC routes through a DACS prior to integration into the switch).

2.6.1 Arrangements 3 and 4 above require the use of a designed circuit. Therefore, non-designed Loops such as the SL1 voice grade and UCL-ND may not be ordered in these cases.

2.6.2 If no alternate facility is available, and upon request from Neutral Tandem, and if agreed to by both Parties, BellSouth may utilize its Special Construction (SC) process to determine the additional costs required to provision facilities. Neutral Tandem will then have the option of paying the one-time SC rates to place the Loop.

2.7 Network Interface Device. The NID is defined as any means of interconnection of the End User’s premises wiring to BellSouth’s distribution plant, such as a cross-

connect device used for that purpose. The NID is a single-line termination device or that portion of a multiple line termination device required to terminate a single line or circuit at the premises. The NID features two independent chambers or divisions that separate the service provider's network from the End User's premises wiring. Each chamber or division contains the appropriate connection points or posts to which the service provider and the End User each make their connections. The NID provides a protective ground connection and is capable of terminating cables such as twisted pair cable.

2.7.1 BellSouth shall permit Neutral Tandem to connect Neutral Tandem's Loop facilities to the End User's premises wiring through the BellSouth NID or at any other technically feasible point.

2.7.2 Access to NID. Neutral Tandem may access the End User's premises wiring by any of the following means and Neutral Tandem shall not disturb the existing form of electrical protection and shall maintain the physical integrity of the NID:

2.7.2.1 BellSouth shall allow Neutral Tandem to connect its Loops directly to BellSouth's multi-line residential NID enclosures that have additional space and are not used by BellSouth or any other telecommunications carriers to provide service to the premises.

2.7.2.1.1 Where an adequate length of the End User's premises wiring is present and environmental conditions permit, either Party may remove the End User premises wiring from the other Party's NID and connect such wiring to that Party's own NID;

2.7.2.1.2 Either Party may enter the subscriber access chamber or dual chamber NID enclosures for the purpose of extending a cross-connect or spliced jumper wire from the End User premises wiring through a suitable "punch-out" hole of such NID enclosures; or

2.7.2.1.3 Neutral Tandem may request BellSouth to make other rearrangements to the End User premises wiring terminations or terminal enclosure on a time and materials cost basis.

2.7.2.2 In no case shall either Party remove or disconnect the other Party's loop facilities from either Party's NIDs, enclosures, or protectors unless the applicable Commission has expressly permitted the same and the disconnecting Party provides prior notice to the other Party. In such cases, it shall be the responsibility of the Party disconnecting loop facilities to leave undisturbed the existing form of electrical protection and to maintain the physical integrity of the NID. It will be Neutral Tandem's responsibility to ensure there is no safety hazard, and Neutral Tandem will hold BellSouth harmless for any liability associated with the removal of the BellSouth loop from the BellSouth NID. Furthermore, it shall be the

responsibility of the disconnecting Party, once the other Party's loop has been disconnected from the NID, to reconnect the disconnected loop to a nationally recognized testing laboratory listed station protector, which has been grounded as per Article 800 of the National Electrical Code. If no spare station protector exists in the NID, the disconnected loop must be appropriately cleared, capped and stored.

2.7.2.3 Neutral Tandem shall not remove or disconnect ground wires from BellSouth's NIDs, enclosures, or protectors.

2.7.2.4 Neutral Tandem shall not remove or disconnect NID modules, protectors, or terminals from BellSouth's NID enclosures.

2.7.2.5 Due to the wide variety of NID enclosures and outside plant environments, BellSouth will work with Neutral Tandem to develop specific procedures to establish the most effective means of implementing this section if the procedures set forth herein do not apply to the NID in question.

2.7.3 Technical Requirements. The NID shall provide an accessible point of interconnection and shall maintain a connection to ground.

2.7.3.1 If an existing NID is accessed, it shall be capable of transferring electrical analog or digital signals between the End User's premises and the distribution media and/or cross-connect to Neutral Tandem's NID.

2.7.3.2 Existing BellSouth NIDs will be operational and provided in working "as is" condition. Neutral Tandem may request BellSouth to do additional work to the NID on a time and material basis. When Neutral Tandem deploys its own local Loops in a multiple-line termination device, Neutral Tandem shall specify the quantity of NID connections that it requires within such device.

2.8 Subloop Elements. Where facilities permit, BellSouth shall offer access to its Unbundled Subloop (USL) elements as specified herein.

2.8.1 Unbundled Subloop Distribution. The Unbundled Subloop Distribution facility is a dedicated transmission facility that BellSouth provides from an End User's point of demarcation to a BellSouth cross-connect device. The BellSouth cross-connect device may be located within a remote terminal (RT) or a stand-alone cross-box in the field or in the equipment room of a building. The unbundled Subloop Distribution media is a copper twisted pair that can be provisioned as a 2-Wire or 4-Wire facility. BellSouth will make available the following subloop distribution offerings where facilities exist:

Unbundled Subloop Distribution – Voice Grade
Unbundled Copper Subloop

Unbundled Subloop Distribution – Intrabuilding Network Cable (aka riser cable)

2.8.1.1 Unbundled Subloop Distribution – Voice Grade (USLD-VG) is a copper subloop facility from the cross-box in the field up to and including the point of demarcation at the End User's premises and may have load coils.

2.8.1.2 Unbundled Copper Subloop (UCSL) is a copper facility 18,000 feet or less in length provided from the cross-box in the field up to and including the End User's point of demarcation. If available, this facility will not have any intervening equipment such as load coils between the End User and the cross-box.

2.8.1.3 If Neutral Tandem requests a UCSL and it is not available, Neutral Tandem may request the copper Subloop facility be modified pursuant to the ULM process to remove load coils and/or excessive bridged taps. If load coils and/or excessive bridged taps are removed, the facility will be classified as a UCSL.

2.8.1.4 Unbundled Subloop Distribution – Intrabuilding Network Cable (USLD-INC) is the distribution facility owned or controlled by BellSouth inside a building or between buildings on the same property that is not separated by a public street or road. USLD-INC includes the facility from the cross-connect device in the building equipment room up to and including the point of demarcation at the End User's premises.

2.8.1.4.1 Upon request for USLD-INC from Neutral Tandem, BellSouth will install a cross-connect panel in the building equipment room for the purpose of accessing USLD-INC pairs from a building equipment room. The cross-connect panel will function as a single point of interconnection (SPOI) for USLD-INC and will be accessible by multiple carriers as space permits. BellSouth will place cross-connect blocks in 25-pair increments for Neutral Tandem's use on this cross-connect panel. Neutral Tandem will be responsible for connecting its facilities to the 25-pair cross-connect block(s).

2.8.1.5 For access to Voice Grade USLD and UCSL, Neutral Tandem shall install a cable to the BellSouth cross-box pursuant to the terms and conditions for physical collocation for remote sites set forth in this Agreement. This cable would be connected by a BellSouth technician within the BellSouth cross-box during the set-up process. Neutral Tandem's cable pairs can then be connected to BellSouth's USL within the BellSouth cross-box by the BellSouth technician.

2.8.1.6 Through the SI process, BellSouth will determine whether access to Unbundled Subloops at the location requested by Neutral Tandem is technically feasible and whether sufficient capacity exists in the cross-box. If existing capacity is sufficient to meet Neutral Tandem's request, then BellSouth will perform the site set-up as described in the CLEC Information Package, located at the BellSouth's

Interconnection Web site located at:
http://www.interconnection.bellsouth.com/products/html/unes.html.

2.8.1.7 The site set-up must be completed before Neutral Tandem can order Subloop pairs. For the site set-up in a BellSouth cross-connect box in the field, BellSouth will perform the necessary work to splice Neutral Tandem's cable into the cross-connect box. For the site set-up inside a building equipment room, BellSouth will perform the necessary work to install the cross-connect panel and the connecting block(s) that will be used to provide access to the requested USLs.

2.8.1.8 Once the site set-up is complete, Neutral Tandem will request Subloop pairs through submission of a LSR form to the Local Carrier Service Center (LCSC). OC is required with USL pair provisioning when Neutral Tandem requests reuse of an existing facility, and the Order Coordination charge shall be billed in addition to the USL pair rate. For expedite requests by Neutral Tandem for Subloop pairs, expedite charges will apply for intervals less than five (5) days.

2.8.1.9 Unbundled Subloops will be provided in accordance with technical reference TR73600.

2.8.2 Unbundled Network Terminating Wire (UNTW). UNTW is unshielded twisted copper wiring that is used to extend circuits from an intra-building network cable terminal or from a building entrance terminal to an individual End User's point of demarcation. It is the final portion of the Loop that in multi-subscriber configurations represents the point at which the network branches out to serve individual subscribers.

2.8.2.1 This element will be provided in Multi-Dwelling Units (MDUs) and/or Multi-Tenants Units (MTUs) where either Party owns wiring all the way to the End User's premises. Neither Party will provide this element in locations where the property owner provides its own wiring to the End User's premises, where a third party owns the wiring to the End User's premises.

2.8.3 Requirements. On a multi-unit premises, upon request of the other Party (Requesting Party), the Party owning the network terminating wire (Provisioning Party) will provide access to UNTW pairs on an Access Terminal that is suitable for use by multiple carriers at each Garden Terminal or Wiring Closet.

2.8.3.1 The Provisioning Party shall not be required to install new or additional NTW beyond existing NTW to provision the services of the Requesting Party.

2.8.3.2 In existing MDUs and/or MTUs in which BellSouth does not own or control wiring (INC/NTW) to the End User's premises, and Neutral Tandem does own or control such wiring, Neutral Tandem will install UNTW Access Terminals for BellSouth under the same terms and conditions as BellSouth provides UNTW Access Terminals to Neutral Tandem.

2.8.3.3 In situations in which BellSouth activates a UNTW pair, BellSouth will compensate Neutral Tandem for each pair activated commensurate to the price specified in Neutral Tandem's Agreement.

2.8.3.4 Upon receipt of the UNTW SI requesting access to the Provisioning Party's UNTW pairs at a multi-unit premises, representatives of both Parties will participate in a meeting at the site of the requested access. The purpose of the site visit will include discussion of the procedures for installation and location of the Access Terminals. By request of the Requesting Party, an Access Terminal will be installed either adjacent to each of the Provisioning Party's Garden Terminal or inside each Wiring Closet. The Requesting Party will deliver and connect its central office facilities to the UNTW pairs within the Access Terminal. The Requesting Party may access any available pair on an Access Terminal. A pair is available when a pair is not being utilized to provide service or where the End User has requested a change in its local service provider to the Requesting Party. Prior to connecting the Requesting Party's service on a pair previously used by the Provisioning Party, the Requesting Party is responsible for ensuring the End User is no longer using the Provisioning Party's service or another CLEC's service before accessing UNTW pairs.

2.8.3.5 Access Terminal installation intervals will be established on an individual case basis.

2.8.3.6 The Requesting Party is responsible for obtaining the property owner's permission for the Provisioning Party to install an Access Terminal(s) on behalf of the Requesting Party. The submission of the SI by the Requesting Party will serve as certification by the Requesting Party that such permission has been obtained. If the property owner objects to Access Terminal installations that are in progress or within thirty (30) days after completion and demands removal of Access Terminals, the Requesting Party will be responsible for costs associated with removing Access Terminals and restoring the property to its original state prior to Access Terminals being installed.

2.8.3.7 The Requesting Party shall indemnify and hold harmless the Provisioning Party against any claims of any kind that may arise out of the Requesting Party's failure to obtain the property owner's permission. The Requesting Party will be billed for nonrecurring and recurring charges for accessing UNTW pairs at the time the Requesting Party activates the pair(s). The Requesting Party will notify the Provisioning Party within five (5) business days of activating UNTW pairs using the LSR form.

2.8.3.8 If a trouble exists on a UNTW pair, the Requesting Party may use an alternate spare pair that serves that End User if a spare pair is available. In such cases, the Requesting Party will re-terminate its existing jumper from the defective pair to the spare pair. Alternatively, the Requesting Party will isolate and report troubles in

the manner specified by the Provisioning Party. The Requesting Party must tag the UNTW pair that requires repair. If the Provisioning Party dispatches a technician on a reported trouble call and no UNTW trouble is found, the Provisioning Party will charge Requesting Party for time spent on the dispatch and testing the UNTW pair(s).

2.8.3.9 If the Requesting Party initiates the Access Terminal installation and the Requesting Party has not activated at least ten (10) percent of the capacity of the Access Terminal installed pursuant to the Requesting Party's request for an Access Terminal within six (6) months of installation of the Access Terminal, the Provisioning Party will bill the Requesting Party a nonrecurring charge equal to the actual cost of provisioning the Access Terminal.

2.8.3.10 If the Provisioning Party determines that the Requesting Party is using the UNTW pairs without reporting the activation of the pairs, the Requesting Party will be billed for the use of that pair back to the date the End User began receiving service from the Requesting Party at that location. Upon request, the Requesting Party will provide copies of its billing record to substantiate such date. If the Requesting Party fails to provide such records, then the Provisioning Party will bill the Requesting Party back to the date of the Access Terminal installation.

2.9 Loop Makeup

2.9.1 Description of Service. BellSouth shall make available to Neutral Tandem LMU information so that Neutral Tandem can make an independent judgment about whether the Loop is capable of supporting the advanced services equipment Neutral Tandem intends to install and the services Neutral Tandem wishes to provide. This section addresses LMU as a preordering transaction, distinct from Neutral Tandem ordering any other service(s). Loop Makeup Service Inquiries (LMUSI) and mechanized LMU queries for preordering LMU are likewise unique from other preordering functions with associated SIs as described in this Agreement.

2.9.1.1 BellSouth will provide Neutral Tandem LMU information consisting of the composition of the Loop material (copper/fiber); the existence, location and type of equipment on the Loop, including but not limited to digital loop carrier or other remote concentration devices, feeder/distribution interfaces, bridged taps, load coils, pair-gain devices; the Loop length; the wire gauge and electrical parameters.

2.9.1.2 BellSouth's LMU information is provided to Neutral Tandem as it exists either in BellSouth's databases or in its hard copy facility records. BellSouth does not guarantee accuracy or reliability of the LMU information provided.

2.9.1.3 BellSouth's provisioning of LMU information to the requesting CLEC for facilities is contingent upon either BellSouth or the requesting CLEC controlling the

Loop(s) that serve the service location for which LMU information has been requested by the CLEC. The requesting CLEC is not authorized to receive LMU information on a facility used or controlled by another CLEC unless BellSouth receives a Letter of Authorization (LOA) from the voice CLEC (owner) or its authorized agent on the LMUSI submitted by the requesting CLEC.

2.9.1.4 Neutral Tandem may choose to use equipment that it deems will enable it to provide a certain type and level of service over a particular BellSouth Loop as long as that equipment does not disrupt other services on the BellSouth network. The determination shall be made solely by Neutral Tandem and BellSouth shall not be liable in any way for the performance of the advanced data services provisioned over said Loop. The specific Loop type (ADSL, HDSL, or otherwise) ordered on the LSR must match the LMU of the Loop reserved taking into consideration any requisite line conditioning. The LMU data is provided for informational purposes only and does not guarantee Neutral Tandem's ability to provide advanced data services over the ordered Loop type. Furthermore, the LMU information for Loops, other than copper-only Loops (e.g. ADSL, UCL-ND, etc.) that support xDSL services, is subject to change at any time due to modifications and/or upgrades to BellSouth's network. Except as set forth in Section 2.9.1.5, copper-only Loops will not be subject to change due to modification and/or upgrades to BellSouth's network and will remain on copper facilities until the Loop is disconnected by Neutral Tandem or the End User, or until BellSouth retires the copper facilities via the FCC's and any applicable Commission's requirements. Neutral Tandem is fully responsible for any of its service configurations that may differ from BellSouth's technical standard for the Loop type ordered.

2.9.1.5 If BellSouth retires its copper facilities using 47 C.F.R §52.325(a) requirements; or is required by a governmental agency or regulatory body to move or replace copper facilities as a maintenance procedure, BellSouth will notify Neutral Tandem, according to the applicable network disclosure requirements. It will be Neutral Tandem's responsibility to move any service it may provide over such facilities to alternative facilities. If Neutral Tandem fails to move the service to alternative facilities by the date in the network disclosure notice, BellSouth may terminate the service to complete the network change.

2.9.2 Submitting Loop Makeup Service Inquiries. Neutral Tandem may obtain LMU information by submitting a mechanized LMU query or a Manual LMUSI. Mechanized LMUs should be submitted through BellSouth's OSS interfaces. After obtaining the Loop information from the mechanized LMU process, if Neutral Tandem needs further Loop information in order to determine Loop service capability, Neutral Tandem may initiate a separate Manual Service Inquiry for a separate nonrecurring charge as set forth in Exhibit A of this Attachment.

2.9.2.1 Manual LMUSIs shall be submitted according to the guidelines in the LMU CLEC Information Package, incorporated herein by reference, as it may be amended from

time to time, which can be found at BellSouth's Interconnection Web site located at: http://interconnection.bellsouth.com/guides/html/unes.html . The service interval for the return of a Manual LMUSI is three (3) business days. Manual LMUSIs are not subject to expedite requests. This service interval is distinct from the interval applied to the subsequent service order.

2.9.3 Loop Reservations. For a Mechanized LMUSI, Neutral Tandem may reserve up to ten (10) Loop facilities. For a Manual LMUSI, Neutral Tandem may reserve up to three (3) Loop facilities.

2.9.3.1 Neutral Tandem may reserve facilities for up to four (4) business days for each facility requested through LMU from the time the LMU information is returned to Neutral Tandem. During and prior to Neutral Tandem placing an LSR, the reserved facilities are rendered unavailable to other customers, including BellSouth. If Neutral Tandem does not submit an LSR for a Network Element on a reserved facility within the four (4)-day reservation timeframe, the reservation of that spare facility will become invalid and the facility will be released.

2.9.3.2 Charges for preordering Manual LMUSI or Mechanized LMU are separate from any charges associated with ordering other services from BellSouth.

2.9.3.3 All LSRs issued for reserved facilities shall reference the facility reservation number as provided by BellSouth. Neutral Tandem will not be billed any additional LMU charges for the Loop ordered on such LSR. If, however, Neutral Tandem does not reserve facilities upon an initial LMUSI, Neutral Tandem's placement of an order for an advanced data service type facility will incur the appropriate billing charges to include SI and reservation per Exhibit A of this Attachment.

2.9.3.4 Where Neutral Tandem has reserved multiple Loop facilities on a single reservation, Neutral Tandem may not specify which facility shall be provisioned when submitting the LSR. For those occasions, BellSouth will assign to Neutral Tandem, subject to availability, a facility that meets the BellSouth technical standards of the BellSouth type Loop as ordered by Neutral Tandem.

3 Line Splitting

3.1 Line Splitting. Line Splitting shall mean that a provider of data services (a Data LEC) and a provider of voice services (a Voice CLEC) deliver voice and data service to End Users over the same Loop. The Voice CLEC and Data LEC may be the same or different carriers.

3.1.1 In the event Neutral Tandem provides its own switching or obtains switching from a third party, Neutral Tandem may engage in line splitting arrangements with another CLEC using a splitter, provided by Neutral Tandem or a third party, in a

Collocation Space at the central office, where the Loop terminates into a distribution frame or its equivalent.

3.1.2 Maintenance – Line Splitting. BellSouth will be responsible for repairing voice troubles and the troubles with the physical Loop between the NID at the End User's premises and the termination point.

3.1.3 Neutral Tandem shall indemnify, defend and hold harmless BellSouth from and against any claims, losses, actions, causes of action, suits, demands, damages, injury, and costs including reasonable attorney fees, which arise out of actions related to the other service provider, except to the extent caused by BellSouth's gross negligence or willful misconduct.

4 Unbundled Network Element Combinations

4.1 For purposes of this Section, references to "Currently Combined" Network Elements shall mean that the particular Network Elements requested by Neutral Tandem are in fact already combined by BellSouth in the BellSouth network. References to "Ordinarily Combined" Network Elements shall mean that the particular Network Elements requested by Neutral Tandem are not already combined by BellSouth in the location requested by Neutral Tandem but are elements that are typically combined in BellSouth's network. References to "Not Typically Combined" Network Elements shall mean that the particular Network Elements requested by Neutral Tandem are not elements that BellSouth combines for its use in its network.

4.1.1 Upon request, BellSouth shall perform the functions necessary to combine Network Elements in any manner, even if those elements are not ordinarily combined in BellSouth's network, provided that such Combination is technically feasible and will not undermine the ability of other carriers to obtain access to Network Elements or to interconnect with BellSouth's network.

4.1.2 To the extent Neutral Tandem requests a Combination for which BellSouth does not have methods and procedures in place to provide such Combination rates and/or methods or procedures for such Combination will be developed pursuant to the BFR process.

4.2 Rates. The rates for the Currently Combined Network Elements specifically set forth in Exhibit A of this Attachment shall be the rates associated with such Combinations. Where a Currently Combined Combination is not specifically set forth in Exhibit A, the rate for such Currently Combined Combination shall be the sum of the recurring rates for those individual Network Elements in addition to the applicable non-recurring switch-as-is charge set forth in Exhibit A.

4.2.1 The rates for the Ordinarily Combined Network Elements specifically set forth in Exhibit A of this Attachment shall be the non-recurring and recurring charges for

those Combinations. Where an Ordinarily Combined Combination is not specifically set forth in Exhibit A, the rate for such Ordinarily Combined Combination shall be the sum of the recurring and non-recurring rates for those individual Network Elements as set forth in Exhibit A.

4.2.2 The rates for Not Typically Combined Combinations shall be developed pursuant to the BFR process upon request of Neutral Tandem.

5 Transport

5.1 BellSouth shall provide nondiscriminatory access, to DS0 and voice grade interoffice transmission facilities dedicated to a particular customer or carrier that Neutral Tandem uses for transmission within a LATA between BellSouth's switches or wire centers described in this Section 5 on an unbundled basis to Neutral Tandem as set forth herein (Dedicated Transport).

5.1.1 BellSouth shall:

5.1.1.1 Provide Neutral Tandem exclusive use of Dedicated Transport to a particular customer or carrier.

5.1.1.2 Provide all technically feasible features, functions, and capabilities of the Dedicated Transport as outlined within the technical requirements within this section;

5.1.1.3 Permit, to the extent technically feasible, Neutral Tandem to connect such Dedicated Transport to equipment designated by Neutral Tandem, including but not limited to, Neutral Tandem's collocated facilities; and

5.1.1.4 Permit, to the extent technically feasible, Neutral Tandem to obtain the functionality provided by BellSouth's digital cross-connect systems.

5.2 Dedicated Transport may be provided over facilities such as optical fiber, copper twisted pair, and coaxial cable, and shall include transmission equipment such as line terminating equipment, amplifiers, and regenerators.

5.2.1 The following COCIs are available for DS0 and voice grade Dedicated Transport: voice grade, ISDN and digital data.

5.2.2 Any request to re-terminate one end of a circuit or change the connecting facility assignment of an existing circuit within the same building will require the issuance of new service and disconnection of the existing service and the appropriate charges in Exhibit A shall apply. The re-terminated circuit shall be considered a new circuit as of the installation date. Such requests may be project managed by BellSouth. Order Coordination - Time Specific may be utilized for such requests.

5.2.3 Technical Requirements. BellSouth shall offer DS0 Equivalent interface transmission rates for DS0 or voice grade Dedicated Transport.

5.2.3.1 BellSouth shall design Dedicated Transport according to its network infrastructure. Neutral Tandem shall specify the termination points for Dedicated Transport.

5.2.3.2 At a minimum, Dedicated Transport shall meet each of the requirements set forth in the applicable industry technical references and BellSouth Technical References: TR-TSY-000191 Alarm Indication Signals Requirements and Objectives, Issue 1, May 1986.

6 Call Related Databases

6.1 911 and E911 Databases. BellSouth shall provide Neutral Tandem with nondiscriminatory access to 911 and E911 databases on an unbundled basis, in accordance with 47 CFR § 51.319 (f).

6.1.1 Automatic Location Identification/Data Management Systems (ALI/DMS). The ALI/DMS Database contains End User information (including name, address, telephone information, and sometimes special information from the local service provider or End User) used to determine to which PSAP to route the call. The ALI/DMS database is used to provide enhanced routing flexibility for E911. Neutral Tandem will be required to provide the BellSouth 911 database vendor daily service order updates to E911 database in accordance with Section 6.1.2.

6.1.2 Technical Requirements. BellSouth's 911 database vendor shall provide Neutral Tandem the capability of providing updates to the ALI/DMS database through a specified electronic interface. Neutral Tandem shall contact BellSouth's 911 database vendor directly to request interface. Neutral Tandem shall provide updates directly to BellSouth's 911 database vendor on a daily basis. Updates shall be the responsibility of Neutral Tandem and BellSouth shall not be liable for the transactions between Neutral Tandem and BellSouth's 911 database vendor.

6.1.2.1 It is Neutral Tandem's responsibility to retrieve and confirm statistical data and to correct errors obtained from BellSouth's 911 database vendor on a daily basis. All errors will be assigned a unique error code and the description of the error and the corrective action is described in the CLEC Users Guide for Facility Based Providers that is found on the BellSouth Interconnection Web site.

6.1.3 Neutral Tandem shall conform to the BellSouth standards as described in the CLEC Users Guide to E911 for Facilities Based Providers that is located on the BellSouth Interconnection Web site at http://www.interconnection.bellsouth.com/guides.

6.1.4 Stranded Unlocks are defined as End User records in BellSouth's ALI/DMS database that have not been migrated for over ninety (90) days to Neutral Tandem, as a new provider of local service to the End User. Stranded Unlocks are those End User records that have been "unlocked" by the previous local exchange carrier that provided service to the End User and are open for Neutral Tandem to assume responsibility for such records.

6.1.4.1 Based upon End User record ownership information available in the NPAC database, BellSouth shall provide a Stranded Unlock annual report to Neutral Tandem that reflects all Stranded Unlocks that remain in the ALI/DMS database for over ninety (90) days. Neutral Tandem shall review the Stranded Unlock report, identify its End User records and request to either delete such records or migrate the records to Neutral Tandem within two (2) months following the date of the Stranded Unlock report provided by BellSouth. Neutral Tandem shall reimburse BellSouth for any charges BellSouth's database vendor imposes on BellSouth for the deletion of Neutral Tandem's records.

6.2 911 PBX Locate Service®. 911 PBX Locate Service is comprised of a database capability and a separate transport component.

6.2.1 Description of Product. The transport component provides a dedicated trunk path from a Private Branch Exchange (PBX) switch to the appropriate BellSouth 911 tandem.

6.2.1.1 The database capability allows Neutral Tandem to offer an E911 service to its PBX End Users that identifies to the Public Safety Answering Point (PSAP) the physical location of the Neutral Tandem PBX 911 End User station telephone number for the 911 call that is placed by the End User.

6.2.2 Neutral Tandem may order either the database capability or the transport component as desired or Neutral Tandem may order both components of the service.

6.2.3 911 PBX Locate Database Capability. Neutral Tandem's End User or Neutral Tandem's End User's database management agent (DMA) must provide the End User PBX station telephone numbers and corresponding address and location data to BellSouth's 911 database vendor. The data will be loaded and maintained in BellSouth's ALI database.

6.2.4 Ordering, provisioning, testing and maintenance shall be provided by Neutral Tandem pursuant to the 911 PBX Locate Marketing Service Description (MSD) that is located on the BellSouth Interconnection Web site.

6.2.5 Neutral Tandem's End User, or Neutral Tandem's End User database management agent must provide ongoing updates to BellSouth's 911 database vendor within a commercially reasonable timeframe of all PBX station telephone number adds,

moves and deletions. It will be the responsibility of Neutral Tandem to ensure that the End User or DMA maintain the data pertaining to each End User's extension managed by the 911 PBX Locate Service product. Neutral Tandem should not submit telephone number updates for specific PBX station telephone numbers that are submitted by Neutral Tandem's End User, or Neutral Tandem's End User DMA under the terms of 911 PBX Locate product.

6.2.5.1 Neutral Tandem must provision all PBX station numbers in the same LATA as the E911 tandem.

6.2.6 Neutral Tandem agrees to release, indemnify, defend and hold harmless BellSouth from any and all loss, claims, demands, suits, or other action, or any liability whatsoever, whether suffered, made, instituted or asserted by Neutral Tandem's End User or by any other party or person, for any personal injury to or death of any person or persons, or for any loss, damage or destruction of any property, whether owned by Neutral Tandem or others, or for any infringement or invasion of the right of privacy of any person or persons, caused or claimed to have been caused, directly or indirectly, by the installation, operation, failure to operate, maintenance, removal, presence, condition, location or use of PBX Locate Service features or by any services which are or may be furnished by BellSouth in connection therewith, including but not limited to the identification of the telephone number, address or name associated with the telephone used by the party or parties accessing 911 services using 911 PBX Locate Service hereunder, except to the extent caused by BellSouth's gross negligence or wilful misconduct. Neutral Tandem is responsible for assuring that its authorized End Users comply with the provisions of these terms and that unauthorized persons do not gain access to or use the 911 PBX Locate Service through user names, passwords, or other identifiers assigned to Neutral Tandem's End User or DMA pursuant to these terms. Specifically, Neutral Tandem's End User or DMA must keep and protect from use by any unauthorized individual identifiers, passwords, and any other security token(s) and devices that are provided for access to this product.

6.2.7 Neutral Tandem may only use BellSouth PBX Locate Service solely for the purpose of validating and correcting 911 related data for Neutral Tandem's End Users' telephone numbers for which it has direct management authority.

6.2.8 <u>911 PBX Locate Transport Component.</u> The 911 PBX Locate Service transport component requires Neutral Tandem to order a CAMA type dedicated trunk from Neutral Tandem's End User premise to the appropriate BellSouth 911 tandem pursuant to the following provisions.

6.2.8.1 Except as otherwise set forth below, a minimum of two (2) End User specific, dedicated 911 trunks are required between the Neutral Tandem's End User premise and the BellSouth 911 tandem as described in BellSouth's Technical Reference (TR) 73576 and in accordance with the 911 PBX Locate Marketing

Service Description located on the BellSouth Interconnection Web site. Neutral Tandem is responsible for connectivity between the End User's PBX and Neutral Tandem's switch or POP location. Neutral Tandem will then order 911 trunks from their switch or POP location to the BellSouth 911 tandem. The dedicated trunks shall be, at a minimum, DS0 level trunks configured as part of a digital interface (delivered over a Neutral Tandem purchased DS1 facility that hands off at a DS1 or higher level digital or optical interface). Neutral Tandem is responsible for ensuring that the PBX switch is capable of sending the calling station's Direct Inward Dial (DID) telephone number to the BellSouth 911 tandem in a specified Multi-frequency (MF) Address Signaling Protocol. If the PBX switch supports Primary Rate ISDN (PRI) and the calling stations are DID numbers, then the 911call can be transmitted using PRI, and there will be no requirement for the PBX Locate Transport component.

6.2.8.2 Ordering and Provisioning. Neutral Tandem will submit an Access Service Request (ASR) to BellSouth to order a minimum of two (2) End User specific 911 trunks from its switch or POP location to the BellSouth 911 tandem.

6.2.8.3 Testing and maintenance shall be provided by Neutral Tandem pursuant to the 911 PBX Locate Marketing Service description that is located on the BellSouth Interconnection Web site.

6.2.8.4 Rates. Rates for the 911 PBX Locate Service database component are set forth in Exhibit A of Attachment 2. Trunks and facilities for 911 PBX Locate transport component may be ordered by Neutral Tandem pursuant to the terms and conditions set forth in Attachment 3.

7 White Pages Listings

7.1 BellSouth shall provide Neutral Tandem and its End Users access to white pages directory listings under the following terms:

7.1.2 Listings. Neutral Tandem shall provide all new, changed and deleted listings on a timely basis and BellSouth or its agent will include Neutral Tandem residential and business End User listings in the appropriate White Pages (residential and business) or alphabetical directories in the geographic areas covered by this Agreement. Directory listings will make no distinction between Neutral Tandem and BellSouth End Users. Neutral Tandem shall provide listing information in accordance with the procedures set forth in The BellSouth Business Rules for Local Ordering found at BellSouth's Interconnection Services Web site.

7.1.3 Unlisted/Non-Published End Users. Neutral Tandem will be required to provide to BellSouth the names, addresses and telephone numbers of all Neutral Tandem End Users who wish to be omitted from directories. Unlisted/Non-Published listings

will be subject to the rates as set forth in BellSouth's General Subscriber Services Tariff (GSST) and shall not be subject to wholesale discount.

7.1.4 Inclusion of Neutral Tandem End Users in Directory Assistance Database. BellSouth will include and maintain Neutral Tandem End User listings in BellSouth's Directory Assistance databases. Neutral Tandem shall provide such Directory Assistance listings to BellSouth at no charge.

7.1.5 Listing Information Confidentiality. BellSouth will afford Neutral Tandem's directory listing information the same level of confidentiality that BellSouth affords its own directory listing information.

7.1.6 Additional and Designer Listings. Additional and designer listings will be offered by BellSouth at tariffed rates as set forth in the GSST and shall not be subject to the wholesale discount.

7.1.7 Rates. So long as Neutral Tandem provides listing information to BellSouth as set forth in Section 7.1.2 above, BellSouth shall provide to Neutral Tandem one (1) basic White Pages directory listing per Neutral Tandem End User at no charge other than applicable service order charges as set forth in BellSouth's tariffs. Except in the case of a local service request (LSR) submitted solely to port a number from BellSouth, if such listing is requested on the initial LSR associated with the request for services, a single manual service order charge or electronic service order charge, as appropriate, as described in Attachment 6 of this Agreement, will apply to both the request for service and the request for the directory listing. Where a subsequent LSR is placed solely to request a directory listing, or is placed to port a number and request a directory listing, separate service order charges as set forth in BellSouth's tariffs shall apply, as well as the manual service order charge or the electronic service order charge, as appropriate, as described in Attachment 6 of this Agreement.

7.2 Directories. BellSouth or its agent shall make available White Pages directories to Neutral Tandem End User at no charge or as specified in a separate agreement between Neutral Tandem and BellSouth's agent.

7.3 Procedures for submitting Neutral Tandem Subscriber Listing Information (SLI) are found in The BellSouth Business Rules for Local Ordering found at BellSouth's Interconnection Services Web site.

7.3.1 Neutral Tandem authorizes BellSouth to release all Neutral Tandem SLI provided to BellSouth by Neutral Tandem to qualifying third parties pursuant to either a license agreement or BellSouth's Directory Publishers Database Service (DPDS), General Subscriber Services Tariff (GSST), as the same may be amended from time to time. Such Neutral Tandem SLI shall be intermingled with BellSouth's

own End User listings and listings of any other CLEC that has authorized a similar release of SLI.

7.3.2 No compensation shall be paid to Neutral Tandem for BellSouth's receipt of Neutral Tandem SLI, or for the subsequent release to third parties of such SLI. In addition, to the extent BellSouth incurs costs to modify its systems to enable the release of Neutral Tandem's SLI, or costs on an ongoing basis to administer the release of Neutral Tandem SLI, Neutral Tandem shall pay to BellSouth its proportionate share of the reasonable costs associated therewith. At any time that costs may be incurred to administer the release of Neutral Tandem's SLI, Neutral Tandem will be notified. If Neutral Tandem does not wish to pay its proportionate share of these reasonable costs, Neutral Tandem may instruct BellSouth that it does not wish to release its SLI to independent publishers, and Neutral Tandem shall amend this Agreement accordingly. Neutral Tandem will be liable for all costs incurred until the effective date of the amendment.

7.3.3 Neither BellSouth nor any agent shall be liable for the content or accuracy of any SLI provided by Neutral Tandem under this Agreement. Neutral Tandem shall indemnify, except to the extent caused by BellSouth's gross negligence or willful misconduct, hold harmless and defend BellSouth and its agents from and against any damages, losses, liabilities, demands, claims, suits, judgments, costs and expenses (including but not limited to reasonable attorneys' fees and expenses) arising from BellSouth's tariff obligations or otherwise and resulting from or arising out of any third party's claim of inaccurate Neutral Tandem listings or use of the SLI provided pursuant to this Agreement. BellSouth may forward to Neutral Tandem any complaints received by BellSouth relating to the accuracy or quality of Neutral Tandem listings.

7.3.4 Listings and subsequent updates will be released consistent with BellSouth system changes and/or update scheduling requirements.

NETWORK ELEMENTS & OTHER SERVICES - Florida														Attachment: 2		Exhibit: A	
CATEGORY		RATE ELEMENTS	Interim	Zone	BCS	USOC	RATES($)					Svc Order Submitted Elec per LSR	Svc Order Submitted Manually per LSR	Incremental Charge - Manual Svc Order vs. Electronic-1st	Incremental Charge - Manual Svc Order vs. Electronic-Add'l	Incremental Charge - Manual Svc Order vs. Electronic-Disc 1st	Incremental Charge - Manual Svc Order vs. Electronic-Disc Add'l
							Rec	Nonrecurring		Nonrecurring Disconnect		OSS Rates($)					
								First	Add'l	First	Add'l	SOMEC	SOMAN	SOMAN	SOMAN	SOMAN	SOMAN
	NOTE: The "Zone" shown in the sections for stand-alone loops or loops as part of a combination refers to Geographically Deaveraged UNE Zones. To view Geographically Deaveraged UNE Zone Designations by Central Office, refer to Internet Web site: http://www.interconnection.bellsouth.com/become_a_clec/html/interconnection.htm.																
OPERATIONS SUPPORT SYSTEMS (OSS) - "REGIONAL RATES"																	
	NOTE: (1) CLEC should contact its contract negotiator if it prefers the "state specific" OSS charges as ordered by the State Commissions. The OSS charges currently contained in this rate exhibit are the BellSouth "regional" service ordering charges. CLEC may elect either the state specific Commission ordered rates for the service ordering charges, or CLEC may elect the regional service ordering charge, however, CLEC can not obtain a mixture of the two regardless if CLEC has a interconnection contract established in each of the 9 states.																
	NOTE: (2) Any element that can be ordered electronically will be billed according to the SOMEC rate listed in this category. Please refer to BellSouth's Local Ordering Handbook (LOH) to determine if a product can be ordered electronically. For those elements that cannot be ordered electronically at present per the LOH, the listed SOMEC rate in this category reflects the charge that would be billed to a CLEC once electronic ordering capabilities come on-line for that element. Otherwise, the manual ordering charge, SOMAN, will be applied to a CLECs bill when it submits an LSR to BellSouth.																
		OSS - Electronic Service Order Charge, Per Local Service Request (LSR) - UNE Only				SOMEC		3.50	0.00	3.50	0.00						
		OSS - Manual Service Order Charge, Per Local Service Request (LSR) - UNE Only				SOMAN		11.90	0.00	1.83	0.00						
UNE SERVICE DATE ADVANCEMENT CHARGE																	
	NOTE: The Expedite charge will be maintained commensurate with BellSouth's FCC No.1 Tariff, Section 5 as applicable.																
		UNE Expedite Charge per Circuit or Line Assignable USOC, per Day			UAL, UEANL, UCL, UEF, UDF, UEQ, UDL, UENTW, UDN, UEA, UHL, ULC, USL, U1T12, U1T48, U1TD1, U1TD3, U1TDX, U1TO3, U1TS1, U1TVX, UC1BC, UC1BL, UC1CC, UC1CL, UC1DC, UC1DL, UC1EC, UC1EL, UC1FC, UC1FL, UC1GC, UC1GL, UC1HC, UC1HL, UDL12, UDL48, UDLO3, UDLSX, UE3, ULD12, ULD48, ULDD1, ULDD3, ULDDX, ULDO3, ULDS1, ULDVX, UNC1X, UNC3X, UNCDX, UNCNX, UNCSX, UNCVX, UNLD1, UNLD3, UXTD1, UXTD3, UXTS1, U1TUC, U1TUD, U1TUB, U1TUA,NTCVG, NTCUD, NTCD1	SDASP		200.00									
ORDER MODIFICATION CHARGE																	
		Order Modification Charge (OMC)						26.21	0.00	0.00	0.00						
		Order Modification Additional Dispatch Charge (OMCAD)						150.00	0.00	0.00	0.00						
UNBUNDLED EXCHANGE ACCESS LOOP																	
	2-WIRE ANALOG VOICE GRADE LOOP																
		2-Wire Analog Voice Grade Loop - Service Level 1- Zone 1		1	UEANL	UEAL2	10.69	49.57	22.83	25.62	6.57						
		2-Wire Analog Voice Grade Loop - Service Level 1- Zone 2		2	UEANL	UEAL2	15.20	49.57	22.83	25.62	6.57						
		2-Wire Analog Voice Grade Loop - Service Level 1- Zone 3		3	UEANL	UEAL2	26.97	49.57	22.83	25.62	6.57						
		2-Wire Analog Voice Grade Loop - Service Level 1- Zone 1		1	UEANL	UEASL	10.69	49.57	22.83	25.62	6.57						
		2-Wire Analog Voice Grade Loop - Service Level 1- Zone 2		2	UEANL	UEASL	15.20	49.57	22.83	25.62	6.57						
		2-Wire Analog Voice Grade Loop - Service Level 1- Zone 3		3	UEANL	UEASL	26.97	49.57	22.83	25.62	6.57						

NETWORK ELEMENTS & OTHER SERVICES - Florida														Attachment: 2		Exhibit: A	
CATEGORY		RATE ELEMENTS	Interim	Zone	BCS	USOC	RATES($)					Svc Order Submitted Elec per LSR	Svc Order Submitted Manually per LSR	Incremental Charge - Manual Svc Order vs. Electronic-1st	Incremental Charge - Manual Svc Order vs. Electronic-Add'l	Incremental Charge - Manual Svc Order vs. Electronic-Disc 1st	Incremental Charge - Manual Svc Order vs. Electronic-Disc Add'l
							Rec	Nonrecurring		Nonrecurring Disconnect		OSS Rates($)					
								First	Add'l	First	Add'l	SOMEC	SOMAN	SOMAN	SOMAN	SOMAN	SOMAN
		Unbundled Miscellaneous Rate Element, Tag Loop at End User Premise			UEANL	URETL		8.93	0.88								
		Loop Testing - Basic 1st Half Hour			UEANL	URET1		48.65	0.00								
		Loop Testing - Basic Additional Half Hour			UEANL	URETA		23.95	23.95								
		CLEC to CLEC Conversion Charge Without Outside Dispatch (UVL-SL1)			UEANL	UREWO		15.78	8.94								
		Unbundled Voice Loop, Non-Design Voice Loop, billing for BST providing make-up (Engineering Information - E.I.)			UEANL	UEANM		13.49									
		Manual Order Coordination for UVL-SL1s (per loop)			UEANL	UEAMC		9.00	9.00								
		Order Coordination for Specified Conversion Time for UVL-SL1 (per LSR)			UEANL	OCOSL		23.02									
	2-WIRE Unbundled COPPER LOOP																
		2-Wire Unbundled Copper Loop - Non-Designed Zone 1	I	1	UEQ	UEQ2X	7.69	44.98	20.90	24.88	6.45						
		2 Wire Unbundled Copper Loop - Non-Designed - Zone 2	I	2	UEQ	UEQ2X	10.92	44.98	20.90	24.88	6.45						
		2 Wire Unbundled Copper Loop - Non-Designed - Zone 3	I	3	UEQ	UEQ2X	19.38	44.98	20.90	24.88	6.45						
		Unbundled Miscellaneous Rate Element, Tag Loop at End User Premise			UEQ	URETL		8.93	0.88								
		Manual Order Coordination 2 Wire Unbundled Copper Loop - Non-Designed (per loop)			UEQ	USBMC		9.00									
		Unbundled Copper Loop, Non-Design Cooper Loop, billing for BST providing make-up (Engineering Information - E.I.)			UEQ	UEQMU		13.49									
		Loop Testing - Basic 1st Half Hour			UEQ	URET1		48.65	0.00								
		Loop Testing - Basic Additional Half Hour			UEQ	URETA		23.95	23.95								
		CLEC to CLEC Conversion Charge Without Outside Dispatch (UCL-ND)			UEQ	UREWO		14.27	7.43								
UNBUNDLED EXCHANGE ACCESS LOOP																	
	2-WIRE ANALOG VOICE GRADE LOOP																
		2-Wire Analog Voice Grade Loop - Service Level 2 w/Loop or Ground Start Signaling - Zone 1		1	UEA, NTCVG	UEAL2	12.24	135.75	82.47	63.53	12.01						
		2-Wire Analog Voice Grade Loop - Service Level 2 w/Loop or Ground Start Signaling - Zone 2		2	UEA, NTCVG	UEAL2	17.40	135.75	82.47	63.53	12.01						
		2-Wire Analog Voice Grade Loop - Service Level 2 w/Loop or Ground Start Signaling - Zone 3		3	UEA, NTCVG	UEAL2	30.87	135.75	82.47	63.53	12.01						
		2-Wire Analog Voice Grade Loop - Service Level 2 w/Reverse Battery Signaling - Zone 1		1	UEA, NTCVG	UEAR2	12.24	135.75	82.47	63.53	12.01						
		2-Wire Analog Voice Grade Loop - Service Level 2 w/Reverse Battery Signaling - Zone 2		2	UEA, NTCVG	UEAR2	17.40	135.75	82.47	63.53	12.01						
		2-Wire Analog Voice Grade Loop - Service Level 2 w/Reverse Battery Signaling - Zone 3		3	UEA, NTCVG	UEAR2	30.87	135.75	82.47	63.53	12.01						
		CLEC to CLEC Conversion Charge without outside dispatch			UEA, NTCVG	UREWO		87.71	36.35								
		Loop Tagging - Service Level 2 (SL2)			UEA, NTCVG	URETL		11.21	1.10								
		SPA to Single Network Element Conversion Switch-As-Is, per UNE, Single LSR, (per Voice Grade DS0)			UEA, NTCVG	URESL		10.46	1.43								
	4-WIRE ANALOG VOICE GRADE LOOP																
		4-Wire Analog Voice Grade Loop - Zone 1		1	UEA, NTCVG	UEAL4	18.89	167.86	115.15	67.08	15.56						
		4-Wire Analog Voice Grade Loop - Zone 2		2	UEA, NTCVG	UEAL4	26.84	167.86	115.15	67.08	15.56						
		4-Wire Analog Voice Grade Loop - Zone 3		3	UEA, NTCVG	UEAL4	47.62	167.86	115.15	67.08	15.56						
		CLEC to CLEC Conversion Charge without outside dispatch			UEA, NTCVG	UREWO		87.71	36.35								
	2-WIRE ISDN DIGITAL GRADE LOOP																
		2-Wire ISDN Digital Grade Loop - Zone 1		1	UDN	U1L2X	19.28	147.69	94.41	62.23	10.71						
		2-Wire ISDN Digital Grade Loop - Zone 2		2	UDN	U1L2X	27.40	147.69	94.41	62.23	10.71						
		2-Wire ISDN Digital Grade Loop - Zone 3		3	UDN	U1L2X	48.62	147.69	94.41	62.23	10.71						
		CLEC to CLEC Conversion Charge without outside dispatch			UDN	UREWO		91.61	44.15								
	2-WIRE ASYMMETRICAL DIGITAL SUBSCRIBER LINE (ADSL) COMPATIBLE LOOP																
		2 Wire Unbundled ADSL Loop including manual service inquiry & facility reservation - Zone 1		1	UAL	UAL2X	8.30	149.53	103.85	75.05	15.63						
		2 Wire Unbundled ADSL Loop including manual service inquiry & facility reservation - Zone 2		2	UAL	UAL2X	11.80	149.53	103.85	75.05	15.63						

NETWORK ELEMENTS & OTHER SERVICES - Florida														Attachment: 2		Exhibit: A	
CATEGORY		RATE ELEMENTS	Interim	Zone	BCS	USOC	RATES($)					Svc Order Submitted Elec per LSR	Svc Order Submitted Manually per LSR	Incremental Charge - Manual Svc Order vs. Electronic-1st	Incremental Charge - Manual Svc Order vs. Electronic-Add'l	Incremental Charge - Manual Svc Order vs. Electronic-Disc 1st	Incremental Charge - Manual Svc Order vs. Electronic-Disc Add'l
							Rec	Nonrecurring		Nonrecurring Disconnect		OSS Rates($)					
								First	Add'l	First	Add'l	SOMEC	SOMAN	SOMAN	SOMAN	SOMAN	SOMAN
		2 Wire Unbundled ADSL Loop including manual service inquiry & facility reservation - Zone 3		3	UAL	UAL2X	20.94	149.53	103.85	75.05	15.63						
		2 Wire Unbundled ADSL Loop without manual service inquiry & facility reservaton - Zone 1		1	UAL	UAL2W	8.30	124.83	71.12	60.64	9.12						
		2 Wire Unbundled ADSL Loop without manual service inquiry & facility reservaton - Zone 2		2	UAL	UAL2W	11.80	124.83	71.12	60.64	9.12						
		2 Wire Unbundled ADSL Loop without manual service inquiry & facility reservaton - Zone 3		3	UAL	UAL2W	20.94	124.83	71.12	60.64	9.12						
		CLEC to CLEC Conversion Charge without outside dispatch			UAL	UREWO		86.19	40.39								
	2-WIRE HIGH BIT RATE DIGITAL SUBSCRIBER LINE (HDSL) COMPATIBLE LOOP																
		2 Wire Unbundled HDSL Loop including manual service inquiry & facility reservation - Zone 1		1	UHL	UHL2X	7.22	159.09	113.41	75.05	15.63						
		2 Wire Unbundled HDSL Loop including manual service inquiry & facility reservation - Zone 2		2	UHL	UHL2X	10.26	159.09	113.41	75.05	15.63						
		2 Wire Unbundled HDSL Loop including manual service inquiry & facility reservation - Zone 3		3	UHL	UHL2X	18.21	159.09	113.41	75.05	15.63						
		2 Wire Unbundled HDSL Loop without manual service inquiry and facility reservation - Zone 1		1	UHL	UHL2W	7.22	134.40	80.69	60.64	9.12						
		2 Wire Unbundled HDSL Loop without manual service inquiry and facility reservation - Zone 2		2	UHL	UHL2W	10.26	134.40	80.69	60.64	9.12						
		2 Wire Unbundled HDSL Loop without manual service inquiry and facility reservation - Zone 3		3	UHL	UHL2W	18.21	134.40	80.69	60.64	9.12						
		CLEC to CLEC Conversion Charge without outside dispatch			UHL	UREWO		86.12	40.39								
	4-WIRE HIGH BIT RATE DIGITAL SUBSCRIBER LINE (HDSL) COMPATIBLE LOOP																
		4 Wire Unbundled HDSL Loop including manual service inquiry and facility reservation - Zone 1		1	UHL	UHL4X	10.86	193.31	138.98	77.15	12.61						
		4-Wire Unbundled HDSL Loop including manual service inquiry and facility reservation - Zone 2		2	UHL	UHL4X	15.44	193.31	138.98	77.15	12.61						
		4-Wire Unbundled HDSL Loop including manual service inquiry and facility reservation - Zone 3		3	UHL	UHL4X	27.39	193.31	138.98	77.15	12.61						
		4-Wire Unbundled HDSL Loop without manual service inquiry and facility reservation - Zone 1		1	UHL	UHL4W	10.86	168.62	115.47	62.74	11.22						
		4-Wire Unbundled HDSL Loop without manual service inquiry and facility reservation - Zone 2		2	UHL	UHL4W	15.44	168.62	115.47	62.74	11.22						
		4-Wire Unbundled HDSL Loop without manual service inquiry and facility reservation - Zone 3		3	UHL	UHL4W	27.39	168.62	115.47	62.74	11.22						
		CLEC to CLEC Conversion Charge without outside dispatch			UHL	UREWO		86.12	40.39								
	4-WIRE 19.2, 56 OR 64 KBPS DIGITAL GRADE LOOP																
		4 Wire Unbundled Digital 19.2 Kbps		1	UDL, NTCUD	UDL19	22.20	161.56	108.85	67.08	15.56						
		4 Wire Unbundled Digital 19.2 Kbps		2	UDL, NTCUD	UDL19	31.56	161.56	108.85	67.08	15.56						
		4 Wire Unbundled Digital 19.2 Kbps		3	UDL, NTCUD	UDL19	55.99	161.56	108.85	67.08	15.56						
		4 Wire Unbundled Digital Loop 56 Kbps - Zone 1		1	UDL, NTCUD	UDL56	22.20	161.56	108.85	67.08	15.56						
		4 Wire Unbundled Digital Loop 56 Kbps - Zone 2		2	UDL, NTCUD	UDL56	31.56	161.56	108.85	67.08	15.56						
		4 Wire Unbundled Digital Loop 56 Kbps - Zone 3		3	UDL, NTCUD	UDL56	55.99	161.56	108.85	67.08	15.56						
		4 Wire Unbundled Digital Loop 64 Kbps - Zone 1		1	UDL, NTCUD	UDL64	22.20	161.56	108.85	67.08	15.56						
		4 Wire Unbundled Digital Loop 64 Kbps - Zone 2		2	UDL, NTCUD	UDL64	31.56	161.56	108.85	67.08	15.56						
		4 Wire Unbundled Digital Loop 64 Kbps - Zone 3		3	UDL, NTCUD	UDL64	55.99	161.56	108.85	67.08	15.56						
		CLEC to CLEC Conversion Charge without outside dispatch			UDL, NTCUD	UREWO		102.11	49.74								
		SPA to Single Network Element Conversion Switch-As-Is, per UNE, Single LSR, DS0			UDL, NTCUD	URESL	10.46	1.43									
	2-WIRE Unbundled COPPER LOOP																
		2-Wire Unbundled Copper Loop-Designed including manual service inquiry & facility reservation - Zone 1		1	UCL	UCLPB	8.30	148.50	102.82	75.05	15.63						
		2-Wire Unbundled Copper Loop-Designed including manual service inquiry & facility reservation - Zone 2		2	UCL	UCLPB	11.80	148.50	102.82	75.05	15.63						
		2 Wire Unbundled Copper Loop-Designed including manual service inquiry & facility reservation - Zone 3		3	UCL	UCLPB	20.94	148.50	102.82	75.05	15.63						
		2-Wire Unbundled Copper Loop-Designed without manual service inquiry and facility reservation - Zone 1		1	UCL	UCLPW	8.30	123.81	70.09	60.64	9.12						

NETWORK ELEMENTS & OTHER SERVICES - Florida														Attachment: 2		Exhibit: A	
CATEGORY		RATE ELEMENTS	Interim	Zone	BCS	USOC	RATES($)					Svc Order Submitted Elec per LSR	Svc Order Submitted Manually per LSR	Incremental Charge - Manual Svc Order vs. Electronic-1st	Incremental Charge - Manual Svc Order vs. Electronic-Add'l	Incremental Charge - Manual Svc Order vs. Electronic-Disc 1st	Incremental Charge - Manual Svc Order vs. Electronic-Disc Add'l
							Rec	Nonrecurring		Nonrecurring Disconnect		OSS Rates($)					
								First	Add'l	First	Add'l	SOMEC	SOMAN	SOMAN	SOMAN	SOMAN	SOMAN
		2-Wire Unbundled Copper Loop-Designed without manual service inquiry and facility reservation - Zone 2		2	UCL	UCLPW	11.80	123.81	70.09	60.64	9.12						
		2-Wire Unbundled Copper Loop-Designed without manual service inquiry and facility reservation - Zone 3		3	UCL	UCLPW	20.94	123.81	70.09	60.64	9.12						
		CLEC to CLEC Conversion Charge without outside dispatch (UCL -Des)			UCL	UREWO		97.21	42.47								
	4-WIRE COPPER LOOP																
		4-Wire Copper Loop-Designed including manual service inquiry and facility reservation - Zone 1		1	UCL	UCL4S	11.83	177.87	132.76	77.15	17.73						
		4-Wire Copper Loop-Designed including manual service inquiry and facility reservation - Zone 2		2	UCL	UCL4S	16.81	177.87	132.76	77.15	17.73						
		4-Wire Copper Loop-Designed including manual service inquiry and facility reservation - Zone 3		3	UCL	UCL4S	29.82	177.87	132.76	77.15	17.73						
		4-Wire Copper Loop-Designed without manual service inquiry and facility reservation - Zone 1		1	UCL	UCL4W	11.83	153.18	100.03	62.74	11.22						
		4-Wire Copper Loop-Designed without manual service inquiry and facility reservation - Zone 2		2	UCL	UCL4W	16.81	153.18	100.03	62.74	11.22						
		4-Wire Copper Loop-Designed without manual service inquiry and facility reservation - Zone 3		3	UCL	UCL4W	29.82	153.18	100.03	62.74	11.22						
		CLEC to CLEC Conversion Charge without outside dispatch			UCL	UREWO		97.21	42.47								
		Order Coordination for Unbundled Copper Loops (per loop)			UCL	UCLMC		9.00	9.00								
		Order Coordination for Specified Conversion Time (per LSR)			UEA, UDN, UAL, UHL, UDL, NTCVG, NTCUD	OCOSL		23.02									
LOOP MODIFICATION																	
		Unbundled Loop Modification, Removal of Load Coils - 2 Wire pair less than or equal to 18k ft, per Unbundled Loop			UAL, UHL, UCL, UEQ, ULS, UEA, UEANL, UEPSR, UEPSB	ULM2L		0.00	0.00								
		Unbundled Loop Modification Removal of Load Coils - 4 Wire less than or equal to 18K ft, per Unbundled Loop			UHL, UCL, UEA	ULM4L		0.00	0.00								
		Unbundled Loop Modification Removal of Bridged Tap Removal, per unbundled loop			UAL, UHL, UCL, UEQ, ULS, UEA, UEANL, UEPSR, UEPSB	ULMBT		10.52	10.52								
SUB-LOOPS																	
	Sub-Loop Distribution																
		Sub-Loop - Per Cross Box Location - CLEC Feeder Facility Set-Up	I		UEANL	USBSA		487.23									
		Sub-Loop - Per Cross Box Location - Per 25 Pair Panel Set-Up	I		UEANL	USBSB		6.25									
		Sub-Loop - Per Building Equipment Room - CLEC Feeder Facility Set-Up	I		UEANL	USBSC		169.25									
		Sub-Loop - Per Building Equipment Room - Per 25 Pair Panel Set-Up	I		UEANL	USBSD		38.65									
		Sub-Loop Distribution Per 2-Wire Analog Voice Grade Loop - Zone 1		1	UEANL	USBN2	6.46	60.19	21.78	47.50	5.26						
		Sub-Loop Distribution Per 2-Wire Analog Voice Grade Loop - Zone 2		2	UEANL	USBN2	9.18	60.19	21.78	47.50	5.26						
		Sub-Loop Distribution Per 2-Wire Analog Voice Grade Loop - Zone 3		3	UEANL	USBN2	16.29	60.19	21.78	47.50	5.26						
		Order Coordination for Unbundled Sub-Loops, per sub-loop pair			UEANL	USBMC		9.00	9.00								
		Sub-Loop Distribution Per 4-Wire Analog Voice Grade Loop - Zone 1		1	UEANL	USBN4	7.37	68.83	30.42	49.71	6.60						
		Sub-Loop Distribution Per 4-Wire Analog Voice Grade Loop - Zone 2		2	UEANL	USBN4	10.47	68.83	30.42	49.71	6.60						
		Sub-Loop Distribution Per 4-Wire Analog Voice Grade Loop - Zone 3		3	UEANL	USBN4	18.58	68.83	30.42	49.71	6.60						

NETWORK ELEMENTS & OTHER SERVICES - Florida														Attachment: 2		Exhibit: A	
CATEGORY		RATE ELEMENTS	Interim	Zone	BCS	USOC	RATES($)					Svc Order Submitted Elec per LSR	Svc Order Submitted Manually per LSR	Incremental Charge - Manual Svc Order vs. Electronic-1st	Incremental Charge - Manual Svc Order vs. Electronic-Add'l	Incremental Charge - Manual Svc Order vs. Electronic-Disc 1st	Incremental Charge - Manual Svc Order vs. Electronic-Disc Add'l
							Rec	Nonrecurring		Nonrecurring Disconnect		OSS Rates($)					
								First	Add'l	First	Add'l	SOMEC	SOMAN	SOMAN	SOMAN	SOMAN	SOMAN
		Order Coordination for Unbundled Sub-Loops, per sub-loop pair			UEANL	USBMC		9.00	9.00								
		Sub-Loop 2-Wire Intrabuilding Network Cable (INC)	I		UEANL	USBR2	3.96	51.84	13.44	47.50	5.26						
		Order Coordination for Unbundled Sub-Loops, per sub-loop pair			UEANL	USBMC		9.00	9.00								
		Sub-Loop 4-Wire Intrabuilding Network Cable (INC)	I		UEANL	USBR4	9.37	55.91	17.51	49.71	6.60						
		Order Coordination for Unbundled Sub-Loops, per sub-loop pair			UEANL	USBMC		9.00	9.00								
		Loop Testing - Basic 1st Half Hour			UEANL	URET1		48.65	0.00								
		Loop Testing - Basic Additional Half Hour			UEANL	URETA		23.95	23.95								
		2 Wire Copper Unbundled Sub-Loop Distribution - Zone 1	I	1	UEF	UCS2X	5.15	60.19	21.78	47.50	5.26						
		2 Wire Copper Unbundled Sub-Loop Distribution - Zone 2	I	2	UEF	UCS2X	7.31	60.19	21.78	47.50	5.26						
		2 Wire Copper Unbundled Sub-Loop Distribution - Zone 3	I	3	UEF	UCS2X	12.98	60.19	21.78	47.50	5.26						
		Order Coordination for Unbundled Sub-Loops, per sub-loop pair			UEF	USBMC		9.00	9.00								
		4 Wire Copper Unbundled Sub-Loop Distribution - Zone 1	I	1	UEF	UCS4X	5.36	68.83	30.42	49.71	6.60						
		4 Wire Copper Unbundled Sub-Loop Distribution - Zone 2	I	2	UEF	UCS4X	7.61	68.83	30.42	49.71	6.60						
		4 Wire Copper Unbundled Sub-Loop Distribution - Zone 3	I	3	UEF	UCS4X	13.51	68.83	30.42	49.71	6.60						
		Order Coordination for Unbundled Sub-Loops, per sub-loop pair			UEF	USBMC		9.00	9.00								
		Loop Tagging Service Level 1, Unbundled Copper Loop, Non-Designed and Distribution Subloops			UEF, UEANL	URETL		8.93	0.88								
		Loop Testing - Basic 1st Half Hour			UEF	URET1		48.65	0.00								
		Loop Testing - Basic Additional Half Hour			UEF	URETA		23.95	23.95								
	Unbundled Sub-Loop Modification																
		Unbundled Sub-Loop Modification - 2-W Copper Dist Load Coil/Equip Removal per 2-W PR			UEF	ULM2X		10.11	10.11								
		Unbundled Sub-loop Modification - 4-W Copper Dist Load Coil/Equip Removal per 4-W PR			UEF	ULM4X		10.11	10.11								
		Unbundled Loop Modification, Removal of Bridge Tap, per unbundled loop			UEF	ULMBT		15.58	15.58								
	Unbundled Network Terminating Wire (UNTW)																
		Unbundled Network Terminating Wire (UNTW) per Pair			UENTW	UENPP	0.4572	18.02									
	Network Interface Device (NID)																
		Network Interface Device (NID) - 1-2 lines			UENTW	UND12		71.49	48.87								
		Network Interface Device (NID) - 1-6 lines			UENTW	UND16		113.89	89.07								
		Network Interface Device Cross Connect - 2 W			UENTW	UNDC2		7.63	7.63								
		Network Interface Device Cross Connect - 4W			UENTW	UNDC4		7.63	7.63								
UNE OTHER, PROVISIONING ONLY - NO RATE																	
		Unbundled Contact Name, Provisioning Only - no rate			UAL, UCL, UDC, UDL, UDN, UEA, UHL, UEANL, UEF, UEQ, UENTW, NTCVG, NTCUD	UNECN	0.00	0.00									
		NID - Dispatch and Service Order for NID installation			UENTW	UNDBX	0.00	0.00									
		UNTW Circuit Establishment, Provisioning Only - No Rate			UENTW	UENCE	0.00	0.00									
LOOP MAKE-UP																	
		Loop Makeup - Preordering Without Reservation, per working or spare facility queried (Manual).			UMK	UMKLW		52.17	52.17								
		Loop Makeup - Preordering With Reservation, per spare facility queried (Manual).			UMK	UMKLP		55.07	55.07								
		Loop Makeup--With or Without Reservation, per working or spare facility queried (Mechanized)			UMK	UMKMQ		0.6784	0.6784								
LINE SPLITTING																	
	END USER ORDERING-CENTRAL OFFICE BASED																
		Line Splitting - per line activation DLEC owned splitter			UEPSR UEPSB	UREOS	0.61										
		Line Splitting - per line activation BST owned - physical			UEPSR UEPSB	UREBP	0.61	29.68	21.28	19.57	9.61						
		Line Splitting - per line activation BST owned - virtual			UEPSR UEPSB	UREBV	1.134	29.68	21.28	19.57	9.61						
	END USER ORDERING - REMOTE SITE LINE SPLITTING																

NETWORK ELEMENTS & OTHER SERVICES - Florida														Attachment: 2		Exhibit: A	
CATEGORY		RATE ELEMENTS	Interim	Zone	BCS	USOC	RATES($)					Svc Order Submitted Elec per LSR	Svc Order Submitted Manually per LSR	Incremental Charge - Manual Svc Order vs. Electronic-1st	Incremental Charge - Manual Svc Order vs. Electronic-Add'l	Incremental Charge - Manual Svc Order vs. Electronic-Disc 1st	Incremental Charge - Manual Svc Order vs. Electronic-Disc Add'l
							Rec	Nonrecurring		Nonrecurring Disconnect		OSS Rates($)					
								First	Add'l	First	Add'l	SOMEC	SOMAN	SOMAN	SOMAN	SOMAN	SOMAN
		Remote Site Shared Loop Line Activation for End Users - CLEC Owned Splitter			UEPSR UEPSB	URERS	0.61	56.89	23.02	7.08	7.08						
		Remote Site Shared Loop - Subsequent Activity - CLEC Owned Splitter			UEPSR UEPSB	URERA		53.88	21.37								
	UNBUNDLED EXCHANGE ACCESS LOOP																
	2-WIRE ANALOG VOICE GRADE LOOP																
		2 Wire Analog Voice Grade Loop-Service Level 1-Line Splitting-Zone 1		1	UEPSR UEPSB	UEALS	10.69	49.57	22.83	25.62	6.57						
		2 Wire Analog Voice Grade Loop-Service Level 1-Line Splitting-Zone 1		1	UEPSR UEPSB	UEABS	10.69	49.57	22.83	25.62	6.57						
		2 Wire Analog Voice Grade Loop- Service Level 1-Line Splitting-Zone 2		2	UEPSR UEPSB	UEALS	15.20	49.57	22.83	25.62	6.57						
		2 Wire Analog Voice Grade Loop- Service Level 1-Line Splitting-Zone 2		2	UEPSR UEPSB	UEABS	15.20	49.57	22.83	25.62	6.57						
		2 Wire Analog Voice Grade Loop-Service Level 1-Line Splitting-Zone 3		3	UEPSR UEPSB	UEALS	26.97	49.57	22.83	25.62	6.57						
		2 Wire Analog Voice Grade Loop-Service Level 1-Line Splitting-Zone 3		3	UEPSR UEPSB	UEABS	26.97	49.57	22.83	25.62	6.57						
		Remote Site 2 Wire Analog Voice Grade Loop -Service Level 1-Line Splitting - CLEC Owned Splitter - Zone 1		1	UEPSR UEPSB	UEARS	6.46	60.19	21.78	47.50	5.26						
		Remote Site 2 Wire Analog Voice Grade Loop -Service Level 1-Line Splitting - CLEC Owned Splitter - Zone 2		2	UEPSR UEPSB	UEARS	9.18	60.19	21.78	47.50	5.26						
		Remote Site 2 Wire Analog Voice Grade Loop -Service Level 1-Line Splitting - CLEC Owned Splitter - Zone 3		3	UEPSR UEPSB	UEARS	16.29	60.19	21.78	47.50	5.26						
	PHYSICAL COLLOCATION																
		Physical Collocation-2 Wire Cross Connects (Loop) for Line Splitting			UEPSR UEPSB	PE1LS	0.0276	8.22	7.22	5.74	4.58						
	VIRTUAL COLLOCATION																
		Virtual Collocation-2 Wire Cross Connects (Loop) for Line Splitting			UEPSR UEPSB	VE1LS	0.0502	11.57	11.57	0.00	0.00						
UNBUNDLED DEDICATED TRANSPORT																	
	INTEROFFICE CHANNEL - DEDICATED TRANSPORT																
		Interoffice Channel - Dedicated Transport - 2-Wire Voice Grade - Per Mile per month			U1TVX	1L5XX	0.0091										
		Interoffice Channel - Dedicated Transport- 2- Wire Voice Grade - Facility Termination			U1TVX	U1TV2	25.32	47.35	31.78	18.31	7.03						
		Interoffice Channel - Dedicated Transpor t- 2-Wire Voice Grade Rev Bat. - Per Mile per month			U1TVX	1L5XX	0.0091										
		Interoffice Channel - Dedicated Transport- 2- Wire VG Rev Bat. - Facility Termination			U1TVX	U1TR2	25.32	47.35	31.78	18.31	7.03						
		Interoffice Channel - Dedicated Transport - 4-Wire Voice Grade - Per Mile per month			U1TVX	1L5XX	0.0091										
		Interoffice Channel - Dedicated Transport - 4- Wire Voice Grade - Facility Termination			U1TVX	U1TV4	22.58	47.35	31.78	18.31	7.03						
		Interoffice Channel - Dedicated Transport - 56 kbps - per mile per month			U1TDX	1L5XX	0.0091										
		Interoffice Channel - Dedicated Transport - 56 kbps - Facility Termination			U1TDX	U1TD5	18.44	47.35	31.78	18.31	7.03						
		Interoffice Channel - Dedicated Transport - 64 kbps - per mile per month			U1TDX	1L5XX	0.0091										
		Interoffice Channel - Dedicated Transport - 64 kbps - Facility Termination			U1TDX	U1TD6	18.44	47.35	31.78	18.31	7.03						
SIGNALING (CCS7)																	
		CCS7 Signaling Termination, Per STP Port			UDB	PT8SX	135.05										
		CCS7 Signaling Connection, Per DS1 level link (A link)			UDB	TPP6A	17.93	43.57	43.57	18.31	18.31						
		CCS7 Signaling Connection, Per DS3 level link (A link)			UDB	TPP9A	17.93	43.57	43.57	18.31	18.31						
		CCS7 Signaling Connection, Per DS1 level link (B link) (also known as D link)			UDB	TPP6B	17.93	43.57	43.57	18.31	18.31						

NETWORK ELEMENTS & OTHER SERVICES - Florida														Attachment: 2		Exhibit: A	
CATEGORY		RATE ELEMENTS	Interim	Zone	BCS	USOC	RATES($)					Svc Order Submitted Elec per LSR	Svc Order Submitted Manually per LSR	Incremental Charge - Manual Svc Order vs. Electronic-1st	Incremental Charge - Manual Svc Order vs. Electronic-Add'l	Incremental Charge - Manual Svc Order vs. Electronic-Disc 1st	Incremental Charge - Manual Svc Order vs. Electronic-Disc Add'l
							Rec	Nonrecurring		Nonrecurring Disconnect		OSS Rates($)					
								First	Add'l	First	Add'l	SOMEC	SOMAN	SOMAN	SOMAN	SOMAN	SOMAN
		CCS7 Signaling Connection, Per DS3 level link (B link) (also known as D link)			UDB	TPP9B	17.93	43.57	43.57	18.31	18.31						
		CCS7 Signaling Usage Surrogate, per link per LATA			UDB	STU56	694.32										
		CCS7 Signaling Point Code, per Originating Point Code Establishment or Change, per STP affected			UDB	CCAPO		46.03	46.03	46.03	46.03						
SELECTIVE ROUTING																	
		Selective Routing Per Unique Line Class Code Per Request Per Switch						93.55	93.55	12.71	12.71						
ENHANCED EXTENDED LINK (EELs)																	
	NOTE: The monthly recurring and non-recurring charges below will apply and the Switch-As-Is Charge will not apply for UNE combinations provisioned as ' Ordinarily Combined' Network Elements.																
	NOTE: The monthly recurring and the Switch-As-Is Charge and not the non-recurring charges below will apply for UNE combinations provisioned as ' Currently Combined' Network Elements.																
	EXTENDED 2-WIRE VOICE GRADE EXTENDED LOOP/ 2 WIRE VOICE GRADE INTEROFFICE TRANSPORT																
		2-WireVG Loop in combination - Zone 1		1	UNCVX	UEAL2	12.24	127.59	60.54	42.79	2.81						
		2-WireVG Loop in combination - Zone 2		2	UNCVX	UEAL2	17.40	127.59	60.54	42.79	2.81						
		2-WireVG Loop in combination - Zone 3		3	UNCVX	UEAL2	30.87	127.59	60.54	42.79	2.81						
		Interoffice Transport - 2-wire VG - Dedicated- Per Mile Per Month			UNCVX	1L5XX	0.0091										
		Interoffice Transport - 2-wire VG - Dedicated - Facility Termination per month			UNCVX	U1TV2	25.32	94.70	52.59	50.49	21.53						
		Wholesale to UNE, Switch-As-Is Charge			UNCVX	UNCCC		8.98	8.98	8.98	8.98						
	EXTENDED 4-WIRE VOICE GRADE EXTENDED LOOP/ 4 WIRE VOICE GRADE INTEROFFICE TRANSPORT																
		4-WireVG Loop in combination - Zone 1		1	UNCVX	UEAL4	18.89	127.59	60.54	42.79	2.81						
		4-WireVG Loop in combination - Zone 2		2	UNCVX	UEAL4	26.84	127.59	60.54	42.79	2.81						
		4-WireVG Loop in combination - Zone 3		3	UNCVX	UEAL4	47.62	127.59	60.54	42.79	2.81						
		Interoffice Transport - 4-wire VG - Dedicated - Per Mile Per Month			UNCVX	1L5XX	0.0091										
		Interoffice Transport - 4-wire VG - Dedicated - Facility Termination per month			UNCVX	U1TV4	22.58	94.70	52.59	50.49	21.53						
		Wholesale to UNE, Switch-As-Is Charge			UNCVX	UNCCC		8.98	8.98	8.98	8.98						
	EXTENDED 4-WIRE 56 KBPS DIGITAL EXTENDED LOOP WITH 56 KBPS INTEROFFICE TRANSPORT																
		4-wire 56 kbps Local Loop in combination - Zone 1		1	UNCDX	UDL56	22.20	127.59	60.54	42.79	2.81						
		4-wire 56 kbps Local Loop in combination - Zone 2		2	UNCDX	UDL56	31.56	127.59	60.54	42.79	2.81						
		4-wire 56 kbps Local Loop in combination - Zone 3		3	UNCDX	UDL56	55.99	127.59	60.54	42.79	2.81						
		Interoffice Transport - Dedicated - 4-wire 56 kbps combination - Per Mile per month			UNCDX	1L5XX	0.0091										
		Interoffice Transport - Dedicated - 4-wire 56 kbps combination - Facility Termination per month			UNCDX	U1TD5	18.44	94.70	52.59	50.49	21.53						
		Wholesale to UNE, Switch-As-Is Charge			UNCDX	UNCCC		8.98	8.98	8.98	8.98						
	EXTENDED 4-WIRE 64 KBPS DIGITAL EXTENDED LOOP WITH 64 KBPS INTEROFFICE TRANSPORT																
		4-wire 64 kbps Lcoal Loop in Combination - Zone 1		1	UNCDX	UDL64	22.20	127.59	60.54	42.79	2.81						
		4-wire 64 kbps Lcoal Loop in Combination - Zone 2		2	UNCDX	UDL64	31.56	127.59	60.54	42.79	2.81						
		4-wire 64 kbps Lcoal Loop in Combination - Zone 3		3	UNCDX	UDL64	55.99	127.59	60.54	42.79	2.81						
		Interoffice Transport - Dedicated - 4-wire 64 kbps combination - Per Mile per month			UNCDX	1L5XX	0.0091										
		Interoffice Transport - Dedicated - 4-wire 64 kbps combination - Facility Termination per month			UNCDX	U1TD6	18.44	94.70	52.59	50.49	21.53						
		Wholesale to UNE, Switch-As-Is Charge			UNCDX	UNCCC		8.98	8.98	8.98	8.98						
	EXTENDED 4-WIRE 56 KBPS DIGITAL EXTENDED LOOP WITH DS0 INTEROFFICE TRANSPORT																
		First 4-wire 56 kbps Local Loop in combination - Zone 1		1	UNCDX	UDL56	22.20	127.59	60.54	42.79	2.81						
		First 4-wire 56 kbps Local Loop in combination - Zone 2		2	UNCDX	UDL56	31.56	127.59	60.54	42.79	2.81						
		First 4-wire 56 kbps Local Loop in combination - Zone 3		3	UNCDX	UDL56	55.99	127.59	60.54	42.79	2.81						
		First 4-wiree 56 kbps Interoffice Transport - Dedicated - Per Mile per month			UNCDX	1L5XX	0.0091										
		First 4-wire 56 kbps Interoffice Transport - Dedicated - Facility Termination per month			UNCDX	U1TD5	18.44	94.70	52.59	50.49	21.53						
		Wholesale to UNE, Switch-As-Is Charge			UNCDX	UNCCC		8.98	8.98	8.98	8.98						
	EXTENDED 4-WIRE 64 KBPS DIGITAL EXTENDED LOOP WITH DS0 INTEROFFICE TRANSPORT																
		First 4-wire 64 kbps Local Loop in combination - Zone 1		1	UNCDX	UDL64	22.20	127.59	60.54	42.79	2.81						
		First 4-wire 64 kbps Local Loop in combination - Zone 2		2	UNCDX	UDL64	31.56	127.59	60.54	42.79	2.81						

NETWORK ELEMENTS & OTHER SERVICES - Florida														Attachment: 2		Exhibit: A	
CATEGORY	RATE ELEMENTS	Interim	Zone	BCS	USOC	RATES($)					Svc Order Submitted Elec per LSR	Svc Order Submitted Manually per LSR	Incremental Charge - Manual Svc Order vs. Electronic-1st	Incremental Charge - Manual Svc Order vs. Electronic-Add'l	Incremental Charge - Manual Svc Order vs. Electronic-Disc 1st	Incremental Charge - Manual Svc Order vs. Electronic-Disc Add'l
						Rec	Nonrecurring		Nonrecurring Disconnect		OSS Rates($)					
							First	Add'l	First	Add'l	SOMEC	SOMAN	SOMAN	SOMAN	SOMAN	SOMAN
	First 4-wire 64 kbps Local Loop in combination - Zone 3		3	UNCDX	UDL64	55.99	127.59	60.54	42.79	2.81						
	First l4-wire 65 kbps Interoffice Transport - Dedicated - Per Mile per month			UNCDX	1L5XX	0.0091										
	First 4-wire 64 kbps Interoffice Transport - Dedicated - Facility Termination per month			UNCDX	U1TD6	18.44	94.70	52.59	50.49	21.53						
	Wholesale to UNE, Switch-As-Is Charge			UNCDX	UNCCC		8.98	8.98	8.98	8.98						
ADDITIONAL NETWORK ELEMENTS																
	When used as a part of a currently combined facility, the non-recurrng charges do not apply, but a Switch As Is charge does apply.															
	When used as ordinarily combined network elements in All States, the non-recurring charges apply and the Switch As Is Charge does not.															
	Nonrecurring Currently Combined Network Elements "Switch As Is" Charge															
	Wholesale to UNE, Switch-As-Is Conversion Charge, 2/4-wire VG			UNCVX	UNCCC		8.98	8.98	8.98	8.98						
	Wholesale to UNE, Switch-As-Is Conversion Charge, 4-wire VG			UNCDX	UNCCC		8.98	8.98	8.98	8.98						
	MULTIPLEXER Interfaces															
	OCU-DP COCI (data) - DS1 to DS0 Channel System - per month (2.4-64kbs) used for a Local Loop			UDL	1D1DD	2.10	10.07	7.08								
	2-wire ISDN COCI (BRITE) - DS1 to DS0 Channel System - per month for a Local Loop			UDN	UC1CA	3.66	10.07	7.08								
	Voice Grade COCI - DS1 to DS0 Channel System - per month used for a Local Loop			UEA	1D1VG	1.38	10.07	7.08								
	NRC - Change in Facility Assignment per circuit Service Rearrangement	I		U1TVX, U1TDX, UEA, UDL, U1TUC, U1TUD, U1TUB, ULDVX, ULDDX, UNCVX, UNCDX	URETD		270.08	47.13								
	NRC - Change in Facility Assignment per circuit Project Management (added to CFA per circuit if project managed)	I		U1TVX, U1TDX, UEA, UDL, U1TUC, U1TUD, U1TUB, ULDVX, ULDDX, UNCVX, UNCDX	URETB		1.28	1.28								
	NRC - Transfer of Ownership per circuit Service Rearrangement (1-14 circuits)	i		U1TVX, U1TDX, UEA, UDL, U1TUC, U1TUD, U1TUB, ULDVX, ULDDX, UNCVX, UNCDX	URETE		17.97	17.97								
	NRC - Transfer of Ownership per circuit Project Management (15 + circuits)	I		U1TVX, U1TDX, UEA, UDL, U1TUC, U1TUD, U1TUB, ULDVX, ULDDX, UNCVX, UNCDX	URETC		2.29	2.29								
	Miscellaneous															
	NRC - Order Coordination Specific Time - Dedicated Transport	I		UNC1X	OCOSR		18.90	18.90								
LNP Query Service																
	LNP Charge Per query					0.000852										
	LNP Service Establishment Manual						13.83	13.83	12.71	12.71						
	LNP Service Provisioning with Point Code Establishment						655.50	334.88	297.03	218.40						
911 PBX LOCATE																
	911 PBX LOCATE DATABASE CAPABILITY															
	Service Establishment per CLEC per End User Account			9PBDC	9PBEU		1,820.00									
	Changes to TN Range or Customer Profile			9PBDC	9PBTN		182.14									
	Per Telephone Number (Monthly)			9PBDC	9PBMM	0.07										
	Change Company (Service Provider) ID			9PBDC	9PBPC		534.66									
	PBX Locate Service Support per CLEC (Monthlt)			9PBDC	9PBMR	178.80										
	Service Order Charge			9PBDC	9PBSC		11.90									
	911 PBX LOCATE TRANSPORT COMPONENT															
	See Att 3															
	NOTE: Rates displaying an "R" in interim column are interim and subject to rate true-up as set forth in General Terms and Conditions.															

NETWORK ELEMENTS & OTHER SERVICES - Georgia														Attachment: 2		Exhibit: A	
CATEGORY		RATE ELEMENTS	Interim	Zone	BCS	USOC	RATES($)					Svc Order Submitted Elec per LSR	Svc Order Submitted Manually per LSR	Incremental Charge - Manual Svc Order vs. Electronic-1st	Incremental Charge - Manual Svc Order vs. Electronic-Add'l	Incremental Charge - Manual Svc Order vs. Electronic-Disc 1st	Incremental Charge - Manual Svc Order vs. Electronic-Disc Add'l
							Rec	Nonrecurring		Nonrecurring Disconnect		OSS Rates($)					
								First	Add'l	First	Add'l	SOMEC	SOMAN	SOMAN	SOMAN	SOMAN	SOMAN
	NOTE: The "Zone" shown in the sections for stand-alone loops or loops as part of a combination refers to Geographically Deaveraged UNE Zones. To view Geographically Deaveraged UNE Zone Designations by Central Office, refer to Internet Web site: http://www.interconnection.bellsouth.com/become_a_clec/html/interconnection.htm.																
OPERATIONS SUPPORT SYSTEMS (OSS) - "REGIONAL RATES"																	
	NOTE: (1) CLEC should contact its contract negotiator if it prefers the "state specific" OSS charges as ordered by the State Commissions. The OSS charges currently contained in this rate exhibit are the BellSouth "regional" service ordering charges. CLEC may elect either the state specific Commission ordered rates for the service ordering charges, or CLEC may elect the regional service ordering charge, however, CLEC can not obtain a mixture of the two regardless if CLEC has a interconnection contract established in each of the 9 states.																
	NOTE: (2) Any element that can be ordered electronically will be billed according to the SOMEC rate listed in this category. Please refer to BellSouth's Local Ordering Handbook (LOH) to determine if a product can be ordered electronically. For those elements that cannot be ordered electronically at present per the LOH, the listed SOMEC rate in this category reflects the charge that would be billed to a CLEC once electronic ordering capabilities come on-line for that element. Otherwise, the manual ordering charge, SOMAN, will be applied to a CLECs bill when it submits an LSR to BellSouth.																
		OSS - Electronic Service Order Charge, Per Local Service Request (LSR) - UNE Only				SOMEC		3.50	0.00	3.50	0.00						
		OSS - Manual Service Order Charge, Per Local Service Request (LSR) - UNE Only				SOMAN		11.73	0.00	6.13	0.00						
UNE SERVICE DATE ADVANCEMENT CHARGE																	
	NOTE: The Expedite charge will be maintained commensurate with BellSouth's FCC No.1 Tariff, Section 5 as applicable.																
		UNE Expedite Charge per Circuit or Line Assignable USOC, per Day			UAL, UEANL, UCL, UEF, UDC, UDF, UEQ, UDL, UENTW, UDN, UEA, UHL, ULC, USL, U1T12, U1T48, U1TD1, U1TD3, U1TDX, U1TO3, U1TS1, U1TVX, UC1BC, UC1BL, UC1CC, UC1CL, UC1DC, UC1DL, UC1EC, UC1EL, UC1FC, UC1FL, UC1GC, UC1GL, UC1HC, UC1HL, UDL12, UDL48, UDLO3, UDLSX, UE3, ULD12, ULD48, ULDD1, ULDD3, ULDDX, ULDO3, ULDS1, ULDVX, UNC1X, UNC3X, UNCDX, UNCNX, UNCSX, UNCVX, UNLD1, UNLD3, UXTD1, UXTD3, UXTS1, U1TUC, U1TUD, U1TUB, U1TUA,NTCVG, NTCUD, NTCD1	SDASP		200.00									
ORDER MODIFICATION CHARGE																	
		Order Modification Charge (OMC)						26.21	0.00	0.00	0.00						
		Order Modification Additional Dispatch Charge (OMCAD)						150.00	0.00	0.00	0.00						
UNBUNDLED EXCHANGE ACCESS LOOP																	
	2-WIRE ANALOG VOICE GRADE LOOP																
		2-Wire Analog Voice Grade Loop - Service Level 1- Zone 1		1	UEANL	UEAL2	10.51	40.02	9.99	5.61	1.72						
		2-Wire Analog Voice Grade Loop - Service Level 1- Zone 2		2	UEANL	UEAL2	15.85	40.02	9.99	5.61	1.72						
		2-Wire Analog Voice Grade Loop - Service Level 1- Zone 3		3	UEANL	UEAL2	31.97	40.02	9.99	5.61	1.72						
		2-Wire Analog Voice Grade Loop - Service Level 1- Zone 1		1	UEANL	UEASL	10.51	40.02	9.99	5.61	1.72						
		2-Wire Analog Voice Grade Loop - Service Level 1- Zone 2		2	UEANL	UEASL	15.85	40.02	9.99	5.61	1.72						
		2-Wire Analog Voice Grade Loop - Service Level 1- Zone 3		3	UEANL	UEASL	31.97	40.02	9.99	5.61	1.72						

NETWORK ELEMENTS & OTHER SERVICES - Georgia														Attachment: 2		Exhibit: A	
CATEGORY		RATE ELEMENTS	Interim	Zone	BCS	USOC	RATES($)					Svc Order Submitted Elec per LSR	Svc Order Submitted Manually per LSR	Incremental Charge - Manual Svc Order vs. Electronic-1st	Incremental Charge - Manual Svc Order vs. Electronic-Add'l	Incremental Charge - Manual Svc Order vs. Electronic-Disc 1st	Incremental Charge - Manual Svc Order vs. Electronic-Disc Add'l
							Rec	Nonrecurring		Nonrecurring Disconnect		OSS Rates($)					
								First	Add'l	First	Add'l	SOMEC	SOMAN	SOMAN	SOMAN	SOMAN	SOMAN
		Unbundled Miscellaneous Rate Element, Tag Loop at End User Premise			UEANL	URETL		8.92	0.88								
		Loop Testing - Basic 1st Half Hour			UEANL	URET1		25.12	0.00								
		Loop Testing - Basic Additional Half Hour			UEANL	URETA		13.62	13.62								
		CLEC to CLEC Conversion Charge Without Outside Dispatch (UVL-SL1)			UEANL	UREWO		15.75	8.92								
		Unbundled Voice Loop, Non-Design Voice Loop, billing for BST providing make-up (Engineering Information - E.I.)			UEANL	UEANM		7.30	7.30								
		Manual Order Coordiantion for UVL-SL1s (per loop)			UEANL	UEAMC		18.92	18.92								
		Order Coordination for Specified Conversion Time for UVL-SL1 (per LSR)			UEANL	OCOSL		57.79									
	2-WIRE UNBUNDLED COPPER LOOP - NON-DESIGNED																
		2 Wire Unbundled Copper Loop Non-Designed- Zone 1		1	UEQ	UEQ2X	11.02	44.69	22.40	0.00	0.00						
		2 Wire Unbundled Copper Loop Non-Designed- Zone 2		2	UEQ	UEQ2X	12.72	44.69	22.40	0.00	0.00						
		2 Wire Unbundled Copper Loop Non-Designed-Zone 3		3	UEQ	UEQ2X	20.22	44.69	22.40	0.00	0.00						
		Unbundled Miscellaneous Rate Element, Tag Loop at End User Premise			UEQ	URETL		8.92	0.88								
		Manual Order Coordination 2 Wire Unbundled Copper Loop - Non-Designed (per loop)			UEQ	USBMC		18.92	18.92								
		Unbundled Copper Loop, Non-Design Copper Loop, billing for BST providing make-up (Engineering Information - E.I.)			UEQ	UEQMU		7.30	7.30								
		Loop Testing - Basic 1st Half Hour			UEQ	URET1		25.12	0.00								
		Loop Testing - Basic Additional Half Hour			UEQ	URETA		13.62	13.62								
		CLEC to CLEC Conversion Charge Without Outside Dispatch (UCL-ND)			UEQ	UREWO		14.25	7.42								
UNBUNDLED EXCHANGE ACCESS LOOP																	
	2-WIRE ANALOG VOICE GRADE LOOP																
		2-Wire Analog Voice Grade Loop - Service Level 2 w/Loop or Ground Start Signaling - Zone 1		1	UEA, NTCVG	UEAL2	11.57	79.85	24.65	18.92	7.87						
		2-Wire Analog Voice Grade Loop - Service Level 2 w/Loop or Ground Start Signaling - Zone 2		2	UEA, NTCVG	UEAL2	16.95	79.85	24.65	18.92	7.87						
		2-Wire Analog Voice Grade Loop - Service Level 2 w/Loop or Ground Start Signaling - Zone 3		3	UEA, NTCVG	UEAL2	33.08	79.85	24.65	18.92	7.87						
		2-Wire Analog Voice Grade Loop - Service Level 2 w/Reverse Battery Signaling - Zone 1		1	UEA, NTCVG	UEAR2	11.57	79.85	24.65	18.92	7.87						
		2-Wire Analog Voice Grade Loop - Service Level 2 w/Reverse Battery Signaling - Zone 2		2	UEA, NTCVG	UEAR2	16.95	79.85	24.65	18.92	7.87						
		2-Wire Analog Voice Grade Loop - Service Level 2 w/Reverse Battery Signaling - Zone 3		3	UEA, NTCVG	UEAR2	33.08	79.85	24.65	18.92	7.87						
		CLEC to CLEC Conversion Charge without outside dispatch			UEA, NTCVG	UREWO		87.72	36.36								
		Loop Tagging - Service Level 2 (SL2)			UEA, NTCVG	URETL		11.19	1.10								
		SPA to Single Network Element Conversion Switch-As-Is, per UNE, Single LSR, (per Voice Grade DS0)			UEA, NTCVG	URESL		10.49	1.44								
	4-WIRE ANALOG VOICE GRADE LOOP																
		4-Wire Analog Voice Grade Loop - Zone 1		1	UEA, NTCVG	UEAL4	17.80	93.01	28.17	19.52	8.12						
		4-Wire Analog Voice Grade Loop - Zone 2		2	UEA, NTCVG	UEAL4	21.68	93.01	28.17	19.52	8.12						
		4-Wire Analog Voice Grade Loop - Zone 3		3	UEA, NTCVG	UEAL4	30.25	93.01	28.17	19.52	8.12						
		CLEC to CLEC Conversion Charge without outside dispatch			UEA, NTCVG	UREWO		87.72	36.36								
	2-WIRE ISDN DIGITAL GRADE LOOP																
		2-Wire ISDN Digital Grade Loop - Zone 1		1	UDN	U1L2X	21.89	180.06	35.25	18.23	6.97						
		2-Wire ISDN Digital Grade Loop - Zone 2		2	UDN	U1L2X	25.27	180.06	35.25	18.23	6.97						
		2-Wire ISDN Digital Grade Loop - Zone 3		3	UDN	U1L2X	40.17	180.06	35.25	18.23	6.97						
		CLEC to CLEC Conversion Charge without outside dispatch			UDN	UREWO		120.98	33.04								
	2-WIRE ASYMMETRICAL DIGITAL SUBSCRIBER LINE (ADSL) COMPATIBLE LOOP																
		2 Wire Unbundled ADSL Loop including manual service inquiry & facility reservation - Zone 1	I	1	UAL	UAL2X	11.23	44.69	31.55	0.00	0.00						
		2 Wire Unbundled ADSL Loop including manual service inquiry & facility reservation - Zone 2	I	2	UAL	UAL2X	12.97	44.69	31.55	0.00	0.00						

NETWORK ELEMENTS & OTHER SERVICES - Georgia														Attachment: 2		Exhibit: A	
CATEGORY		RATE ELEMENTS	Interim	Zone	BCS	USOC	RATES($)					Svc Order Submitted Elec per LSR	Svc Order Submitted Manually per LSR	Incremental Charge - Manual Svc Order vs. Electronic-1st	Incremental Charge - Manual Svc Order vs. Electronic-Add'l	Incremental Charge - Manual Svc Order vs. Electronic-Disc 1st	Incremental Charge - Manual Svc Order vs. Electronic-Disc Add'l
							Rec	Nonrecurring		Nonrecurring Disconnect		OSS Rates($)					
								First	Add'l	First	Add'l	SOMEC	SOMAN	SOMAN	SOMAN	SOMAN	SOMAN
		2 Wire Unbundled ADSL Loop including manual service inquiry & facility reservation - Zone 3	I	3	UAL	UAL2X	20.62	44.69	31.55	0.00	0.00						
		2 Wire Unbundled ADSL Loop without manual service inquiry & facility reservaton - Zone 1	I	1	UAL	UAL2W	11.23	44.69	31.55	0.00	0.00						
		2 Wire Unbundled ADSL Loop without manual service inquiry & facility reservaton - Zone 2	I	2	UAL	UAL2W	12.97	44.69	31.55	0.00	0.00						
		2 Wire Unbundled ADSL Loop without manual service inquiry & facility reservaton - Zone 3	I	3	UAL	UAL2W	20.62	44.69	31.55	0.00	0.00						
		CLEC to CLEC Conversion Charge without outside dispatch	I		UAL	UREWO		44.69	29.29								
	2-WIRE HIGH BIT RATE DIGITAL SUBSCRIBER LINE (HDSL) COMPATIBLE LOOP																
		2 Wire Unbundled HDSL Loop including manual service inquiry & facility reservation - Zone 1	I	1	UHL	UHL2X	7.88	44.69	31.55	0.00	0.00						
		2 Wire Unbundled HDSL Loop including manual service inquiry & facility reservation - Zone 2	I	2	UHL	UHL2X	9.09	44.69	31.55	0.00	0.00						
		2 Wire Unbundled HDSL Loop including manual service inquiry & facility reservation - Zone 3	I	3	UHL	UHL2X	14.48	44.69	31.55	0.00	0.00						
		2 Wire Unbundled HDSL Loop without manual service inquiry and facility reservation - Zone 1	I	1	UHL	UHL2W	7.88	44.69	31.55	0.00	0.00						
		2 Wire Unbundled HDSL Loop without manual service inquiry and facility reservation - Zone 2	I	2	UHL	UHL2W	9.09	44.69	31.55	0.00	0.00						
		2 Wire Unbundled HDSL Loop without manual service inquiry and facility reservation - Zone 3	I	3	UHL	UHL2W	14.48	44.69	31.55	0.00	0.00						
		CLEC to CLEC Conversion Charge without outside dispatch	I		UHL	UREWO		44.69	31.55								
	4-WIRE HIGH BIT RATE DIGITAL SUBSCRIBER LINE (HDSL) COMPATIBLE LOOP																
		4 Wire Unbundled HDSL Loop including manual service inquiry and facility reservation - Zone 1	I	1	UHL	UHL4X	10.39	44.69	31.55	0.00	0.00						
		4-Wire Unbundled HDSL Loop including manual service inquiry and facility reservation - Zone 2	I	2	UHL	UHL4X	12.00	44.69	31.55	0.00	0.00						
		4-Wire Unbundled HDSL Loop including manual service inquiry and facility reservation - Zone 3	I	3	UHL	UHL4X	19.07	44.69	31.55	0.00	0.00						
		4-Wire Unbundled HDSL Loop without manual service inquiry and facility reservation - Zone 1	I	1	UHL	UHL4W	10.39	44.69	31.55	0.00	0.00						
		4-Wire Unbundled HDSL Loop without manual service inquiry and facility reservation - Zone 2	I	2	UHL	UHL4W	12.00	44.69	31.55	0.00	0.00						
		4-Wire Unbundled HDSL Loop without manual service inquiry and facility reservation - Zone 3	I	3	UHL	UHL4W	19.07	44.69	31.55	0.00	0.00						
		CLEC to CLEC Conversion Charge without outside dispatch	I		UHL	UREWO		44.69	31.55								
	4-WIRE 19.2, 56 OR 64 KBPS DIGITAL GRADE LOOP																
		4 Wire Unbundled Digital 19.2 Kbps		1	UDL, NTCUD	UDL19	21.86	196.66	37.00	18.82	7.20						
		4 Wire Unbundled Digital 19.2 Kbps		2	UDL, NTCUD	UDL19	28.36	196.66	37.00	18.82	7.20						
		4 Wire Unbundled Digital 19.2 Kbps		3	UDL, NTCUD	UDL19	38.22	196.66	37.00	18.82	7.20						
		4 Wire Unbundled Digital Loop 56 Kbps - Zone 1		1	UDL, NTCUD	UDL56	21.86	196.66	37.00	18.82	7.20						
		4 Wire Unbundled Digital Loop 56 Kbps - Zone 2		2	UDL, NTCUD	UDL56	28.36	196.66	37.00	18.82	7.20						
		4 Wire Unbundled Digital Loop 56 Kbps - Zone 3		3	UDL, NTCUD	UDL56	38.22	196.66	37.00	18.82	7.20						
		4 Wire Unbundled Digital Loop 64 Kbps - Zone 1		1	UDL, NTCUD	UDL64	21.86	196.66	37.00	18.82	7.20						
		4 Wire Unbundled Digital Loop 64 Kbps - Zone 2		2	UDL, NTCUD	UDL64	28.36	196.66	37.00	18.82	7.20						
		4 Wire Unbundled Digital Loop 64 Kbps - Zone 3		3	UDL, NTCUD	UDL64	38.22	196.66	37.00	18.82	7.20						
		CLEC to CLEC Conversion Charge without outside dispatc h			UDL, NTCUD	UREWO		101.95	49.66								
		SPA to Single Network Element Conversion Switch-As-Is, per UNE, Single LSR, (per Digital DS0)			UDL, NTCUD	URESL		10.49	1.44								
	2-WIRE Unbundled COPPER LOOP																
		2-Wire Unbundled Copper Loop-Designed including manual service inquiry & facility reservation - Zone 1	I	1	UCL	UCLPB	12.02	44.69	31.55	0.00	0.00						
		2-Wire Unbundled Copper Loop-Designed including manual service inquiry & facility reservation - Zone 2	I	2	UCL	UCLPB	13.88	44.69	31.55	0.00	0.00						
		2 Wire Unbundled Copper Loop-Designed including manual service inquiry & facility reservation - Zone 3	I	3	UCL	UCLPB	22.07	44.69	31.55	0.00	0.00						
		2-Wire Unbundled Copper Loop-Designed without manual service inquiry and facility reservation - Zone 1	I	1	UCL	UCLPW	12.02	44.69	31.55	0.00	0.00						

CATEGORY	RATE ELEMENTS	Interim	Zone	BCS	USOC	RATES($)					Svc Order Submitted Elec per LSR	Svc Order Submitted Manually per LSR	Incremental Charge - Manual Svc Order vs. Electronic-1st	Incremental Charge - Manual Svc Order vs. Electronic-Add'l	Incremental Charge - Manual Svc Order vs. Electronic-Disc 1st	Incremental Charge - Manual Svc Order vs. Electronic-Disc Add'l
						Rec	Nonrecurring		Nonrecurring Disconnect		OSS Rates($)					
							First	Add'l	First	Add'l	SOMEC	SOMAN	SOMAN	SOMAN	SOMAN	SOMAN
	2-Wire Unbundled Copper Loop-Designed without manual service inquiry and facility reservation - Zone 2	I	2	UCL	UCLPW	13.88	44.69	31.55	0.00	0.00						
	2-Wire Unbundled Copper Loop-Designed without manual service inquiry and facility reservation - Zone 3	I	3	UCL	UCLPW	22.07	44.69	31.55	0.00	0.00						
	CLEC to CLEC Conversion Charge without outside dispatch (UCL-Des)	I		UCL	UREWO		44.69	31.55								
4-WIRE COPPER LOOP																
	4-Wire Copper Loop-Designed including manual service inquiry and facility reservation - Zone 1	I	1	UCL	UCL4S	16.65	44.69	31.55	0.00	0.00						
	4-Wire Copper Loop-Designed including manual service inquiry and facility reservation - Zone 2	I	2	UCL	UCL4S	19.22	44.69	31.55	0.00	0.00						
	4-Wire Copper Loop-Designed including manual service inquiry and facility reservation - Zone 3	I	3	UCL	UCL4S	30.55	44.69	31.55	0.00	0.00						
	4-Wire Copper Loop-Designed without manual service inquiry and facility reservation - Zone 1	I	1	UCL	UCL4W	16.65	44.69	31.55	0.00	0.00						
	4-Wire Copper Loop-Designed without manual service inquiry and facility reservation - Zone 2	I	2	UCL	UCL4W	19.22	44.69	31.55	0.00	0.00						
	4-Wire Copper Loop-Designed without manual service inquiry and facility reservation - Zone 3	I	3	UCL	UCL4W	30.55	44.69	31.55	0.00	0.00						
	CLEC to CLEC conversion Charge without outside dispatch	I		UCL	UREWO		44.69	31.55								
	Order Coordination for Unbundled Copper Loops (per loop)			UCL	UCLMC		18.92	18.92								
	Order Coordination for Specified Conversion Time (per LSR)			UEA, UDN, UAL, UHL, UDL, NTCVG, NTCUD	OCOSL		57.79									
LOOP MODIFICATION																
	Unbundled Loop Modification, Removal of Load Coils - 2 Wire pair less than or equal to 18k ft, per Unbundled Loop	I		UAL, UHL, UCL, UEQ, ULS, UEA, UEANL, UEPSR, UEPSB	ULM2L		0.00	0.00								
	Unbundled Loop Modification Removal of Load Coils - 4 Wire less than or equal to 18K ft, per Unbundled Loop	I		UHL, UCL, UEA	ULM4L		0.00	0.00								
	Unbundled Loop Modification Removal of Bridged Tap Removal, per Unbundled Loop			UAL, UHL, UCL, UEQ, ULS, UEA, UEANL, UEPSR, UEPSB	ULMBT		17.91									
SUB-LOOPS																
Sub-Loop Distribution																
	Sub-Loop - Per Cross Box Location - CLEC Feeder Facility Set-Up			UEANL	USBSA		255.76									
	Sub-Loop - Per Cross Box Location - Per 25 Pair Panel Set-Up			UEANL	USBSB		7.29									
	Sub-Loop - Per Building Equipment Room - CLEC Feeder Facility Set-Up			UEANL	USBSC		175.09									
	Sub-Loop - Per Building Equipment Room - Per 25 Pair Panel Set-Up			UEANL	USBSD		51.61									
	Unbundled Sub-Loops, Riser Cable, 2-Wire per Loop, Working and Spare Loop Activation			UEANL	USBRC	3.61	28.46	3.85	2.20	0.01						
	Unbundled Sub-Loops, Riser Cable, 4-Wire per Loop, Working and Spare Loop Activation			UEANL	USBRD	7.67	31.07	4.79	2.27	0.01						
	Sub-Loop Distribution Per 2-Wire Analog Voice Grade Loop - Zone 1		1	UEANL	USBN2	6.52	28.46	3.85	2.20	0.01						
	Sub-Loop Distribution Per 2-Wire Analog Voice Grade Loop - Zone 2		2	UEANL	USBN2	10.18	28.46	3.85	2.20	0.01						
	Sub-Loop Distribution Per 2-Wire Analog Voice Grade Loop - Zone 3		3	UEANL	USBN2	19.51	28.46	3.85	2.20	0.01						
	Sub-Loop Distribution Per 4-Wire Analog Voice Grade Loop - Zone 1		1	UEANL	USBN4	5.93	31.07	4.79	2.27	0.01						
	Sub-Loop Distribution Per 4-Wire Analog Voice Grade Loop - Zone 2		2	UEANL	USBN4	9.71	31.07	4.79	2.27	0.01						

NETWORK ELEMENTS & OTHER SERVICES - Georgia														Attachment: 2		Exhibit: A	
CATEGORY		RATE ELEMENTS	Interim	Zone	BCS	USOC	RATES($)					Svc Order Submitted Elec per LSR	Svc Order Submitted Manually per LSR	Incremental Charge - Manual Svc Order vs. Electronic-1st	Incremental Charge - Manual Svc Order vs. Electronic-Add'l	Incremental Charge - Manual Svc Order vs. Electronic-Disc 1st	Incremental Charge - Manual Svc Order vs. Electronic-Disc Add'l
							Rec	Nonrecurring		Nonrecurring Disconnect		OSS Rates($)					
								First	Add'l	First	Add'l	SOMEC	SOMAN	SOMAN	SOMAN	SOMAN	SOMAN
		Sub-Loop Distribution Per 4-Wire Analog Voice Grade Loop - Zone 3		3	UEANL	USBN4	18.85	31.07	4.79	2.27	0.01						
		Order Coordination for Unbundled Sub-Loops, per sub-loop pair			UEANL	USBMC		18.92	18.92								
		Sub-Loop 2-Wire Intrabuilding Network Cable (INC)			UEANL	USBR2	3.61	28.46	3.85	2.20	0.01						
		Order Coordination for Unbundled Sub-Loops, per sub-loop pair			UEANL	USBMC		18.92	18.92								
		Sub-Loop 4-Wire Intrabuilding Network Cable (INC)	I		UEANL	USBR4	7.67	31.07	4.79	2.27	0.01						
		Order Coordination for Unbundled Sub-Loops, per sub-loop pair			UEANL	USBMC		18.92	18.92								
		Loop Testing - Basic 1st Half Hour			UEANL	URET1		25.12	0.00								
		Loop Testing - Basic Additional Half Hour			UEANL	URETA		13.62	13.62								
		2 Wire Copper Unbundled Sub-Loop Distribution - Zone 1	I	1	UEF	UCS2X	5.94	28.46	3.85	2.20	0.01						
		2 Wire Copper Unbundled Sub-Loop Distribution - Zone 2	I	2	UEF	UCS2X	7.51	28.46	3.85	2.20	0.01						
		2 Wire Copper Unbundled Sub-Loop Distribution - Zone 3	I	3	UEF	UCS2X	9.22	28.46	3.85	2.20	0.01						
		Order Coordination for Unbundled Sub-Loops, per sub-loop pair			UEF	USBMC		18.92	18.92								
		4 Wire Copper Unbundled Sub-Loop Distribution - Zone 1	I	1	UEF	UCS4X	6.37	31.07	4.79	2.27	0.01						
		4 Wire Copper Unbundled Sub-Loop Distribution - Zone 2	I	2	UEF	UCS4X	6.32	31.07	4.79	2.27	0.01						
		4 Wire Copper Unbundled Sub-Loop Distribution - Zone 3	I	3	UEF	UCS4X	9.10	31.07	4.79	2.27	0.01						
		Order Coordination for Unbundled Sub-Loops, per sub-loop pair			UEF	USBMC		18.92	18.92								
		Loop tagging Service Level 1, Unbundled Copper Loop, Non-Designed and Distribution Subloops			UEF, UEANL	URETL		8.92	0.88								
		Loop Testing - Basic 1st Half Hour			UEF	URET1		25.12	0.00								
		Loop Testing - Basic Additional Half Hour			UEF	URETA		13.62	13.62								
	Unbundled Sub-Loop Modification																
		Unbundled Sub-Loop Modification - 2-W Copper Dist Load Coil/Equip Removal per 2-W PR			UEF	ULM2X		0.00	0.00								
		Unbundled Sub-loop Modification - 4-W Copper Dist Load Coil/Equip Removal per 4-W PR			UEF	ULM4X		0.00	0.00								
		Unbundled Loop Modification, Removal of bridge Tap, per unbundled loop			UEF	ULMBT		17.91	17.91								
	Unbundled Network Terminating Wire (UNTW)																
		Unbundled Network Terminating Wire (UNTW) per Pair			UENTW	UENPP	0.533	25.12	12.28								
	Network Interface Device (NID)																
		Network Interface Device (NID) - 1-2 lines	I		UENTW	UND12		32.86	20.69								
		Network Interface Device (NID) - 1-6 lines	I		UENTW	UND16		56.03	43.86								
		Network Interface Device Cross Connect - 2 W	I		UENTW	UNDC2		2.45	2.45								
		Network Interface Device Cross Connect - 4W			UENTW	UNDC4		2.45	2.45								
UNE OTHER, PROVISIONING ONLY - NO RATE																	
		Unbundled Contact Name, Provisioning Only - no rate			UAL, UCL, UDC, UDL, UDN, UEA, UHL, UEANL, UEF, UEQ, UENTW, NTCVG, NTCUD	UNECN	0.00	0.00									
		NID - Dispatch and Service Order for NID installation			UENTW	UNDBX	0.00	0.00									
		UNTW Circuit Establishment, Provisioning Only - No Rate			UENTW	UENCE	0.00	0.00									
LOOP MAKE-UP																	
		Loop Makeup - Preordering Without Reservation, per working or spare facility queried (Manual).			UMK	UMKLW		15.19	15.19								
		Loop Makeup - Preordering With Reservation, per spare facility queried (Manual).			UMK	UMKLP		19.85	19.85								
		Loop Makeup--With or Without Reservation, per working or spare facility queried (Mechanized)			UMK	UMKMQ		0.82	0.82								
LINE SPLITTING																	
	END USER ORDERING-CENTRAL OFFICE BASED																
		Line Splitting - per line activation DLEC owned splitter			UEPSR UEPSB	UREOS	0.61										
		Line Splitting - per line activation BST owned - physical			UEPSR UEPSB	UREBP	0.6297	20.10	12.40	7.68	4.30						

NETWORK ELEMENTS & OTHER SERVICES - Georgia														Attachment: 2		Exhibit: A	
CATEGORY	RATE ELEMENTS	Interim	Zone	BCS	USOC	RATES($)					Svc Order Submitted Elec per LSR	Svc Order Submitted Manually per LSR	Incremental Charge - Manual Svc Order vs. Electronic-1st	Incremental Charge - Manual Svc Order vs. Electronic-Add'l	Incremental Charge - Manual Svc Order vs. Electronic-Disc 1st	Incremental Charge - Manual Svc Order vs. Electronic-Disc Add'l
						Rec	Nonrecurring		Nonrecurring Disconnect		OSS Rates($)					
							First	Add'l	First	Add'l	SOMEC	SOMAN	SOMAN	SOMAN	SOMAN	SOMAN
	Line Splitting - per line activation BST owned - virtual			UEPSR UEPSB	UREBV	0.6288	20.10	12.40	7.68	4.30						
	END USER ORDERING - REMOTE SITE LINE SPLITTING															
	Remote Site Shared Loop Line Activation for End Users - CLEC Owned Splitter			UEPSR UEPSB	URERS	0.61	57.13	23.12	7.11	7.11						
	Remote Site Shared Loop - Subsequent Activity - CLEC Owned Splitter			UEPSR UEPSB	URERA		54.10	21.46								
	UNBUNDLED EXCHANGE ACCESS LOOP															
	2-WIRE ANALOG VOICE GRADE LOOP															
	Remote Site 2 Wire Analog Voice Grade Loop -Service Level 1-Line Splitting - CLEC Owned Splitter - Zone 1		1	UEPSR UEPSB	UEARS	6.52	28.46	3.85	2.20	0.01						
	Remote Site 2 Wire Analog Voice Grade Loop -Service Level 1-Line Splitting - CLEC Owned Splitter - Zone 2		2	UEPSR UEPSB	UEARS	10.18	28.46	3.85	2.20	0.01						
	Remote Site 2 Wire Analog Voice Grade Loop -Service Level 1-Line Splitting - CLEC Owned Splitter - Zone 3		3	UEPSR UEPSB	UEARS	19.51	28.46	3.85	2.20	0.01						
	UNE Loop Rates for Line Splitting (In Ga. PSC ordered the line splitting loop USOCs match the lower port- loop combo rates UEPLX)															
	2-Wire Voice Grade Loop (SL1) for Line Splitting - Zone 1	I	1	UEPSR UEPSB	UEALS	9.56	10.05	7.36	1.37	1.28						
	2-Wire Voice Grade Loop (SL1) for Line Splitting - Zone 1	I	1	UEPSR UEPSB	UEABS	9.56	10.05	7.36	1.37	1.28						
	2-Wire Voice Grade Loop (SL1) for Line Splitting - Zone 2	I	2	UEPSR UEPSB	UEALS	14.86	10.05	7.36	1.37	1.28						
	2-Wire Voice Grade Loop (SL1) for Line Splitting - Zone 2	I	2	UEPSR UEPSB	UEABS	14.86	10.05	7.36	1.37	1.28						
	2-Wire Voice Grade Loop (SL1)for Line Splitting - Zone 3	I	3	UEPSR UEPSB	UEALS	31.66	10.05	7.36	1.37	1.28						
	2-Wire Voice Grade Loop (SL1)for Line Splitting - Zone 3	I	3	UEPSR UEPSB	UEABS	31.66	10.05	7.36	1.37	1.28						
	PHYSICAL COLLOCATION															
	Physical Collocation-2 Wire Cross Connects (Loop) for Line Splitting			UEPSR UEPSB	PE1LS	0.0197	0.00	0.00								
	VIRTUAL COLLOCATION															
	Virtual Collocation-2 Wire Cross Connects (Loop) for Line Splitting			UEPSR UEPSB	VE1LS	0.0188	0.00	0.00	0.00	0.00						
UNBUNDLED DEDICATED TRANSPORT																
	INTEROFFICE CHANNEL - DEDICATED TRANSPORT															
	Interoffice Channel - Dedicated Transport - 2-Wire Voice Grade - Per Mile per month			U1TVX	1L5XX	0.0057										
	Interoffice Channel - Dedicated Transport- 2- Wire Voice Grade - Facility Termination			U1TVX	U1TV2	12.87	48.46	19.48	16.58	5.00						
	Interoffice Channel - Dedicated Transpor t- 2-Wire Voice Grade Rev Bat. - Per Mile per month			U1TVX	1L5XX	0.0057										
	Interoffice Channel - Dedicated Transport- 2- Wire VG Rev Bat. - Facility Termination			U1TVX	U1TR2	12.87	48.46	19.48	16.58	5.00						
	Interoffice Channel - Dedicated Transport - 4-Wire Voice Grade - Per Mile per month			U1TVX	1L5XX	0.0057										
	Interoffice Channel - Dedicated Transport - 4- Wire Voice Grade - Facility Termination			U1TVX	U1TV4	10.78	48.46	19.48	16.58	5.00						
	Interoffice Channel - Dedicated Transport - 56 kbps - per mile per month			U1TDX	1L5XX	0.0057										
	Interoffice Channel - Dedicated Transport - 56 kbps - Facility Termination			U1TDX	U1TD5	7.83	48.46	19.48	16.58	5.00						
	Interoffice Channel - Dedicated Transport - 64 kbps - per mile per month			U1TDX	1L5XX	0.0057										
	Interoffice Channel - Dedicated Transport - 64 kbps - Facility Termination			U1TDX	U1TD6	7.83	48.46	19.48	16.58	5.00						
SIGNALING (CCS7)																
	CCS7 Signaling Connection, Per 56Kbps Facility A-Link DS1			UDB	TPP6A	8.73	34.77	34.77	16.91	16.91						
	CCS7 Signaling Connection, Per 56Kbps Facility A-Link DS3			UDB	TPP9A	8.73	34.77	34.77	16.91	16.91						
	CCS7 Signaling Connection, Per 56Kbps Facility B-Link DS1			UDB	TPP6B	8.73	34.77	34.77	16.91	16.91						
	CCS7 Signaling Connection, Per 56Kbps Facility B-Link DS3			UDB	TPP9B	8.73	34.77	34.77	16.91	16.91						
	CCS7 Signaling Termination, Per STP Port			UDB	PT8SX	108.80										
	CCS7 Signaling Usage Surrogate, per link			UDB	STU56	907.44										
	CCS7 Signaling Point Code, Establishment or Change, per STP affected			UDB	CCAPO		28.15	28.15	33.32	33.32						
SELECTIVE ROUTING																

CATEGORY	RATE ELEMENTS	Interim	Zone	BCS	USOC	RATES($)					Svc Order Submitted Elec per LSR	Svc Order Submitted Manually per LSR	Incremental Charge - Manual Svc Order vs. Electronic-1st	Incremental Charge - Manual Svc Order vs. Electronic-Add'l	Incremental Charge - Manual Svc Order vs. Electronic-Disc 1st	Incremental Charge - Manual Svc Order vs. Electronic-Disc Add'l
						Rec	Nonrecurring		Nonrecurring Disconnect		OSS Rates($)					
							First	Add'l	First	Add'l	SOMEC	SOMAN	SOMAN	SOMAN	SOMAN	SOMAN
	Selective Routing Per Unique Line Class Code Per Request Per Switch						102.19	61.15	12.68	6.34						
ENHANCED EXTENDED LINK (EELs)																
	NOTE: The monthly recurring and non-recurring charges below will apply and the Switch-As-Is Charge will not apply for UNE combinations provisioned as ' Ordinarily Combined' Network Elements.															
	NOTE: The monthly recurring and the Switch-As-Is Charge and not the non-recurring charges below will apply for UNE combinations provisioned as ' Currently Combined' Network Elements.															
	EXTENDED 2-WIRE VOICE GRADE EXTENDED LOOP/ 2 WIRE VOICE GRADE INTEROFFICE TRANSPORT															
	2-WireVG Loop in combination - Zone 1		1	UNCVX	UEAL2	11.57	195.94	36.38	18.42	6.86						
	2-WireVG Loop in combination - Zone 2		2	UNCVX	UEAL2	16.95	195.94	36.38	18.42	6.86						
	2-WireVG Loop in combination - Zone 3		3	UNCVX	UEAL2	33.08	195.94	36.38	18.42	6.86						
	Interoffice Transport - 2-wire VG - Dedicated- Per Mile Per Month			UNCVX	1L5XX	0.0057										
	Interoffice Transport - 2-wire VG - Dedicated - Facility Termination per month			UNCVX	U1TV2	12.87	66.53	33.61	43.42	27.60						
	Wholesale to UNE, Switch-As-Is Charge			UNCVX	UNCCC		5.70	5.70	6.61	6.61						
	EXTENDED 4-WIRE VOICE GRADE EXTENDED LOOP/ 4 WIRE VOICE GRADE INTEROFFICE TRANSPORT															
	4-WireVG Loop in combination - Zone 1		1	UNCVX	UEAL4	17.80	195.94	36.38	18.42	6.86						
	4-WireVG Loop in combination - Zone 2		2	UNCVX	UEAL4	21.68	195.94	36.38	18.42	6.86						
	4-WireVG Loop in combination - Zone 3		3	UNCVX	UEAL4	30.25	195.94	36.38	18.42	6.86						
	Interoffice Transport - 4-wire VG - Dedicated - Per Mile Per Month			UNCVX	1L5XX	0.0057										
	Interoffice Transport - 4-wire VG - Dedicated - Facility Termination per month			UNCVX	U1TV4	10.78	66.53	33.61	43.42	27.60						
	Wholesale to UNE, Switch-As-Is Charge			UNCVX	UNCCC		5.70	5.70	6.61	6.61						
	EXTENDED 4-WIRE 56 KBPS DIGITAL EXTENDED LOOP WITH 56 KBPS INTEROFFICE TRANSPORT															
	4-wire 56 kbps Local Loop in combination - Zone 1		1	UNCDX	UDL56	21.86	195.94	36.38	18.42	6.86						
	4-wire 56 kbps Local Loop in combination - Zone 2		2	UNCDX	UDL56	28.36	195.94	36.38	18.42	6.86						
	4-wire 56 kbps Local Loop in combination - Zone 3		3	UNCDX	UDL56	38.22	195.94	36.38	18.42	6.86						
	Interoffice Transport - Dedicated - 4-wire 56 kbps combination - Per Mile per month			UNCDX	1L5XX	0.0057										
	Interoffice Transport - Dedicated - 4-wire 56 kbps combination - Facility Termination per month			UNCDX	U1TD5	7.83	66.53	33.61	43.42	27.60						
	Wholesale to UNE, Switch-As-Is Charge			UNCDX	UNCCC		5.70	5.70	6.61	6.61						
	EXTENDED 4-WIRE 64 KBPS DIGITAL EXTENDED LOOP WITH 64 KBPS INTEROFFICE TRANSPORT															
	4-wire 64 kbps Lcoal Loop in Combination - Zone 1		1	UNCDX	UDL64	21.86	195.94	36.38	18.42	6.86						
	4-wire 64 kbps Lcoal Loop in Combination - Zone 2		2	UNCDX	UDL64	28.36	195.94	36.38	18.42	6.86						
	4-wire 64 kbps Lcoal Loop in Combination - Zone 3		3	UNCDX	UDL64	38.22	195.94	36.38	18.42	6.86						
	Interoffice Transport - Dedicated - 4-wire 64 kbps combination - Per Mile per month			UNCDX	1L5XX	0.0057										
	Interoffice Transport - Dedicated - 4-wire 64 kbps combination - Facility Termination per month			UNCDX	U1TD6	7.83	66.53	33.61	43.42	27.60						
	Wholesale to UNE, Switch-As-Is Charge			UNCDX	UNCCC		5.70	5.70	6.61	6.61						
	EXTENDED 4-WIRE 56 KBPS DIGITAL EXTENDED LOOP WITH DS0 INTEROFFICE TRANSPORT															
	First 4-wire 56 kbps Local Loop in combination - Zone 1		1	UNCDX	UDL56	21.86	195.94	36.38	18.42	6.86						
	First 4-wire 56 kbps Local Loop in combination - Zone 2		2	UNCDX	UDL56	28.36	195.94	36.38	18.42	6.86						
	First 4-wire 56 kbps Local Loop in combination - Zone 3		3	UNCDX	UDL56	38.22	195.94	36.38	18.42	6.86						
	First 4-wiree 56 kbps Interoffice Transport - Dedicated - Per Mile per month			UNCDX	1L5XX	0.0057										
	First 4-wire 56 kbps Interoffice Transport - Dedicated - Facility Termination per month			UNCDX	U1TD5	7.83	66.53	33.61	43.42	27.60						
	Wholesale to UNE, Switch-As-Is Charge			UNCDX	UNCCC		5.70	5.70	6.61	6.61						
	EXTENDED 4-WIRE 64 KBPS DIGITAL EXTENDED LOOP WITH DS0 INTEROFFICE TRANSPORT															
	First 4-wire 64 kbps Local Loop in combination - Zone 1		1	UNCDX	UDL64	21.86	195.94	36.38	18.42	6.86						
	First 4-wire 64 kbps Local Loop in combination - Zone 2		2	UNCDX	UDL64	28.36	195.94	36.38	18.42	6.86						
	First 4-wire 64 kbps Local Loop in combination - Zone 3		3	UNCDX	UDL64	38.22	195.94	36.38	18.42	6.86						
	First I4-wire 65 kbps Interoffice Transport - Dedicated - Per Mile per month			UNCDX	1L5XX	0.0057										
	First 4-wire 64 kbps Interoffice Transport - Dedicated - Facility Termination per month			UNCDX	U1TD6	7.83	66.53	33.61	43.42	27.60						
	Wholesale to UNE, Switch-As-Is Charge			UNCDX	UNCCC		5.70	5.70	6.61	6.61						

NETWORK ELEMENTS & OTHER SERVICES - Georgia														Attachment: 2		Exhibit: A	
CATEGORY		RATE ELEMENTS	Interim	Zone	BCS	USOC	RATES($)					Svc Order Submitted Elec per LSR	Svc Order Submitted Manually per LSR	Incremental Charge - Manual Svc Order vs. Electronic-1st	Incremental Charge - Manual Svc Order vs. Electronic-Add'l	Incremental Charge - Manual Svc Order vs. Electronic-Disc 1st	Incremental Charge - Manual Svc Order vs. Electronic-Disc Add'l
							Rec	Nonrecurring		Nonrecurring Disconnect		OSS Rates($)					
								First	Add'l	First	Add'l	SOMEC	SOMAN	SOMAN	SOMAN	SOMAN	SOMAN
ADDITIONAL NETWORK ELEMENTS																	
	When used as a part of a currently combined facility, the non-recurrng charges do not apply, but a Switch As Is charge does apply.																
	When used as ordinarily combined network elements in All States, the non-recurring charges apply and the Switch As Is Charge does not.																
	Nonrecurring Currently Combined Network Elements "Switch As Is" Charge																
		Wholesale to UNE, Switch-As-Is Conversion Charge, 2/4-wire VG			UNCVX	UNCCC		5.70	5.70	6.61	6.61						
		Wholesale to UNE, Switch-As-Is Conversion Charge, 4-wire VG			UNCDX	UNCCC		5.70	5.70	6.61	6.61						
	MULTIPLEXER Interfaces																
		OCU-DP COCI (data) - DS1 to DS0 Channel System - per month (2.4-64kbs) used for a Local Loop			UDL	1D1DD	0.9963	11.98	11.39	6.61	6.61						
		2-wire ISDN COCI (BRITE) - DS1 to DS0 Channel System - per month for a Local Loop			UDN	UC1CA	1.66	15.81	11.39	6.61	6.61						
		Voice Grade COCI - DS1 to DS0 Channel System - per month used for a Local Loop			UEA	1D1VG	0.4689	11.98	11.39	6.61	6.61						
	Service Rearrangements																
		NRC - Change in Facility Assignment per circuit Service Rearrangement	I		U1TVX, U1TDX, UEA, UDL, U1TUC, U1TUD, U1TUB, ULDVX, ULDDX, UNCVX, UNCDX	URETD		269.92	47.10								
		NRC - Change in Facility Assignment per circuit Project Management (added to CFA per circuit if project managed)	I		U1TVX, U1TDX, UEA, UDL, U1TUC, U1TUD, U1TUB, ULDVX, ULDDX, UNCVX, UNCDX	URETB		1.28	1.28								
		NRC - Transfer of Ownership per circuit Service Rearrangement (1-14 circuits)	i		U1TVX, U1TDX, UEA, UDL, U1TUC, U1TUD, U1TUB, ULDVX, ULDDX, UNCVX, UNCDX	URETE		1.64	1.64								
		NRC - Transfer of Ownership per circuit Project Management (15 + circuits)	I		U1TVX, U1TDX, UEA, UDL, U1TUC, U1TUD, U1TUB, ULDVX, ULDDX, UNCVX, UNCDX	URETC		2.32	2.32								
	Miscellaneous																
		NRC - Order Coordination Specific Time - Dedicated Transport	I		UNC1X	OCOSR		18.89	18.89								
LNP Query Service																	
		LNP Charge Per query					0.0008034										
		LNP Service Establishment Manual						12.49		11.09							
		LNP Service Provisioning with Point Code Establishment						574.87	293.68	251.47	184.91						
911 PBX LOCATE																	
	911 PBX LOCATE DATABASE CAPABILITY																
		Service Establishment per CLEC per End User Account			9PBDC	9PBEU		1,825.00									
		Changes to TN Range or Customer Profile			9PBDC	9PBTN		182.67									
		Per Telephone Number (Monthly)			9PBDC	9PBMM	0.07										
		Change Company (Service Provider) ID			9PBDC	9PBPC		536.23									
		PBX Locate Service Support per CLEC (Monthlt)			9PBDC	9PBMR	176.96										
		Service Order Charge			9PBDC	9PBSC		11.73									
	911 PBX LOCATE TRANSPORT COMPONENT																
	See Att 3																
	NOTE: Rates displaying an "R" in interim column are interim and subject to rate true-up as set forth in General Terms and Conditions.																

Attachment 3

Network Interconnection

TABLE OF CONTENTS

1. GENERAL 3

2. DEFINITIONS: (FOR THE PURPOSE OF THIS ATTACHMENT) 3

3. NETWORK INTERCONNECTION 5

4. INTERCONNECTION TRUNK GROUP ARCHITECTURES 7

5. NETWORK DESIGN AND MANAGEMENT FOR INTERCONNECTION 14

6. FORECASTING FOR TRUNK PROVISIONING 14

7. LOCAL DIALING PARITY 17

8. INTERCONNECTION COMPENSATION 17

9. FRAME RELAY SERVICE INTERCONNECTION 22

10. ORDERING CHARGES 25

11. BASIC 911 AND E911 INTERCONNECTION 25

12. SS7 NETWORK INTERCONNECTION 26

Rates	**Exhibit A**
Basic Architecture	**Exhibit B**
One Way Architecture	**Exhibit C**
Two Way Architecture	**Exhibit D**
Supergroup Architecture	**Exhibit E**

NETWORK INTERCONNECTION

1. GENERAL

1.1 The Parties shall provide interconnection with each other's networks for the transmission and routing of telephone exchange service (Local Traffic), ISP-Bound Traffic, and exchange access (Switched Access Traffic) on the following terms:

2. DEFINITIONS: (FOR THE PURPOSE OF THIS ATTACHMENT)

For purposes of this attachment only, the following terms shall have the definitions set forth below:

2.1 **Automatic Location Identification (ALI)** is a feature by which the address associated with the calling party's telephone number (ANI) is forwarded to the PSAP for display. Access to the ALI database is described in Attachment 2 to this Agreement.

2.2 **Automatic Number Identification (ANI)** corresponds to the seven-digit telephone number assigned by the serving local exchange carrier.

2.3 **BellSouth Trunk Group** is defined as a one-way trunk group carrying BellSouth originated traffic to be terminated by Neutral Tandem.

2.4 **911 Service** is as described in this Attachment.

2.5 **Call Termination** has the meaning set forth for "termination" in 47CFR § 51.701(d).

2.6 **Call Transport** has the meaning set forth for "transport" in 47 CFR § 51.701(c).

2.7 **Call Transport and Termination** is used collectively to mean the switching and transport functions from the Interconnection Point to the last point of switching.

2.8 **Common (Shared) Transport** is defined as the transport of the originating Party's traffic by the terminating Party over the terminating Party's common (shared) facilities between (1) the terminating Party's tandem switch and end office switch, (2) between the terminating Party's tandem switches, and/or (3) between the terminating Party's host and remote end office switches. All switches referred herein must be entered into the Local Exchange Routing Guide (LERG).

2.9 **Dedicated Interoffice Facility** is defined as a switch transport facility between a Party's Serving Wire Center and the first point of switching within the LATA on the other Party's network.

2.10 **End Office Switching** is defined as the function that establishes a communications path between the trunk side and line side of the End Office switch.

2.11 **Fiber Meet** is an interconnection arrangement whereby the Parties physically interconnect their networks via an optical fiber interface at which one Party's facilities, provisioning, and maintenance responsibility begins and the other Party's responsibility ends.

2.12 **Final Trunk Group** is defined as the trunk group that does not carry overflow traffic.

2.13 **Integrated Services Digital Network User Part (ISUP)** is a message protocol to support call set-up and release for interoffice voice connections over SS7 signaling.

2.14 **Interconnection Point (IP)** is the physical telecommunications equipment interface that interconnects the networks of BellSouth and Neutral Tandem.

2.15 **IntraLATA Toll Traffic** is as defined in Section 7 of this Attachment.

2.16 **ISP-Bound Traffic** is as defined in this Attachment.

2.17 **Local Channel** is defined as a switched transport facility between a Party's Interconnection Point and the IP's Serving Wire Center.

2.18 **Local Traffic** is as defined in of this Attachment.

2.19 **Public Safety Answering Point (PSAP)** is the answering location for 911 calls.

2.20 **Selective Routing (SR)** is a standard feature that routes an E911 call from the tandem to the designated PSAP based upon the address of the ANI of the calling party.

2.21 **Serving Wire Center** is defined as the wire center owned by one Party from which the other Party would normally obtain dial tone for its IP.

2.22 **Signaling System 7 (SS7)/Common Channel Signaling 7 (CCS7)** is an out-of-band signaling system used to provide basic routing information, call set-up and other call termination functions. Signaling is removed from the voice channel and put on a separate data network.

2.23 **Tandem Switching** is defined as the function that establishes a communications path between two switching offices through a third switching office through the provision of trunk side to trunk side switching.

2.24 **Transit Traffic** is traffic originating on Neutral Tandem's network that is switched and/or transported by BellSouth and delivered to a third party's network, or traffic originating on a third party's network that is switched and/or transported by BellSouth and delivered to Neutral Tandem's network.

3. NETWORK INTERCONNECTION

3.1 This Attachment pertains only to the provision of network interconnection where Neutral Tandem owns, leases from a third party or otherwise provides its own switch(es).

3.2 Network interconnection may be provided by the Parties at any technically feasible point within BellSouth's network. Requests to BellSouth for interconnection at points other than as set forth in this Attachment may be made through the Bona Fide Request/New Business Request (BFR/NBR) process set out in this Agreement.

3.2.1 Each Party is responsible for providing, engineering and maintaining the network on its side of the IP. The IP must be located within BellSouth's serving territory in the LATA in which traffic is originating. The IP determines the point at which the originating Party shall pay the terminating Party for the Call Transport and Termination of Local Traffic, ISP-Bound Traffic and IntraLATA Toll Traffic. In selecting the IP, both Parties will act in good faith and select the point that is most efficient for both Parties.

3.2.2 Pursuant to the provisions of this Attachment, the location of the initial IP in a given LATA shall be established by mutual agreement of the Parties. Subject to the requirements for installing additional IPs, as set forth below, any IPs existing prior to the Effective Date of the Agreement will be accepted as initial IPs and will not require re-grooming. When the Parties mutually agree to utilize two-way interconnection trunk groups for the exchange of Local Traffic, ISP-Bound Traffic and IntraLATA Toll Traffic between each other, the Parties shall mutually agree to the location of IP(s). If the Parties are unable to agree to a mutual initial IP, each Party, as originating Party, shall establish a single IP in the LATA for the delivery of its originated Local Traffic, ISP-Bound Traffic and IntraLATA Toll Traffic to the other Party for Call Transport and Termination by the terminating Party.

3.2.3 Additional IP(s) in a LATA may be established by mutual agreement of the Parties. Notwithstanding the foregoing, additional IP(s) in a particular LATA shall be established, at the request of either Party, when the Local Traffic and ISP-Bound Traffic exceeds 8.9 million minutes per month for three consecutive months at the proposed location of the additional IP. BellSouth will not request the establishment of an IP in a BellSouth Central Office where physical or virtual collocation space is not available or where BellSouth fiber connectivity is not available. When the Parties agree to utilize two-way interconnection trunk groups for the exchange of Local Traffic, ISP-Bound Traffic and IntraLATA Toll Traffic the Parties must agree to the location of the IP(s).

3.3 Interconnection via Dedicated Facilities

3.3.1 Local Channel Facilities. As part of Call Transport and Termination, the originating Party may obtain Local Channel facilities from the terminating Party. The percentage of Local Channel facilities utilized for Local Traffic and ISP-Bound Traffic shall be determined based upon the application of the Percent Local Facility (PLF) Factor as set forth in this Attachment. The charges applied to the percentage of Local Channel facilities used for Local Traffic and ISP-Bound Traffic as determined by the PLF are as set forth in Exhibit A to this Attachment. The remaining percentage of Local Channel facilities shall be billed at BellSouth's applicable access tariff rates.

3.3.2 Dedicated Interoffice Facilities. As a part of Call Transport and Termination, the originating Party may obtain Dedicated Interoffice Facilities from the terminating Party. The percentage of Dedicated Interoffice Facilities utilized for Local Traffic and ISP-Bound Traffic shall be determined based upon the application of the Percent Local Facility (PLF) Factor as set forth in this Attachment. The charges applied to the percentage of the Dedicated Interoffice Facilities used for Local Traffic and ISP-Bound Traffic as determined by the PLF are as set forth in Exhibit A to this Attachment. The remaining percentage of the Dedicated Interoffice Facilities shall be billed at BellSouth's applicable access tariff rates.

3.4 Fiber Meet. Notwithstanding Section 3.2.1, 3.2.2, and 3.2.3 above, if Neutral Tandem elects to establish interconnection with BellSouth pursuant to a Fiber Meet Local Channel, Neutral Tandem and BellSouth shall jointly engineer, operate and maintain a Synchronous Optical Network (SONET) transmission system by which they shall interconnect their transmission and routing of Local Traffic and ISP-Bound Traffic via a Local Channel at either the DS1 or DS3 level. The Parties shall work jointly to determine the specific transmission system. However, Neutral Tandem's SONET transmission system must be compatible with BellSouth's equipment, and the Data Communications Channel (DCC) must be turned off.

3.4.1 Each Party, at its own expense, shall procure, install and maintain the agreed upon SONET transmission system in its network.

3.4.2 The Parties shall agree to a Fiber Meet point between the BellSouth Serving Wire Center and the Neutral Tandem Serving Wire Center. The Parties shall deliver their fiber optic facilities to the Fiber Meet point with sufficient spare length to reach the fusion splice point for the Fiber Meet Point. BellSouth shall, at its own expense, provide and maintain the fusion splice point for the Fiber Meet. A building type Common Language Location Identification (CLLI) code will be established for each Fiber Meet point. All orders for interconnection facilities from the Fiber Meet point shall indicate the Fiber Meet point as the originating point for the facility.

3.4.3 Upon verbal request by Neutral Tandem, BellSouth shall allow Neutral Tandem access to the fusion splice point for the Fiber Meet point for maintenance purposes on Neutral Tandem's side of the Fiber Meet point.

3.4.4 Neither Party shall charge the other for its Local Channel portion of the Fiber Meet facility used exclusively for Local Traffic and ISP-Bound Traffic. The percentage of Local Channel facilities utilized for Local Traffic and ISP-Bound Traffic shall be determined based upon the application of the Percent Local Facility (PLF) Factor as set forth in this Attachment. The charges applied to the percentage of Local Channel facilities used for Local Traffic and ISP-Bound Traffic as determined by the PLF are as set forth in Exhibit A to this Attachment. The remaining percentage of Local Channel facilities shall be billed at BellSouth's applicable access tariff rates. Charges for switched and special access services shall be billed in accordance with the applicable access service tariff.

4. INTERCONNECTION TRUNK GROUP ARCHITECTURES

4.1 BellSouth and Neutral Tandem shall establish interconnecting trunk groups and trunk group configurations between networks, including the use of one-way or two-way trunks in accordance with the following provisions set forth in this Agreement**.** For trunking purposes, traffic will be routed based on the digits dialed by the originating End User and in accordance with the LERG.

4.2 Neutral Tandem shall establish an interconnection trunk group(s) to at least one BellSouth access tandem within the LATA for the delivery of Neutral Tandem's originated Local Traffic, ISP-Bound Traffic and IntraLATA Toll Traffic and for the receipt and delivery of Transit Traffic. To the extent Neutral Tandem desires to deliver Local Traffic, ISP-Bound Traffic, IntraLATA Toll Traffic and/or Transit Traffic to BellSouth access tandems within the LATA, other than the tandems(s) to which Neutral Tandem has established interconnection trunk groups, Neutral Tandem shall pay the appropriate rates for Multiple Tandem Access, as described in this Attachment.

4.2.1 Notwithstanding the forgoing, Neutral Tandem shall establish an interconnection trunk group(s) to all BellSouth access and local tandems in the LATA where Neutral Tandem has homed (i.e. assigned) its NPA/NXXs. Neutral Tandem shall home its NPA/NXXs on the BellSouth tandems that serve the exchange rate center areas to which the NPA/NXXs are assigned. The specified exchange rate center assigned to each BellSouth tandem is defined in the LERG. Neutral Tandem shall enter its NPA/NXX access and/or local tandem homing arrangements into the LERG.

4.3 Switched access traffic will be delivered to and from Interexchange Carriers (IXCs) based on Neutral Tandem's NXX access tandem homing arrangement as specified by Neutral Tandem in the LERG.

4.4 Any Neutral Tandem interconnection request that (1) deviates from the interconnection trunk group architectures as described in this Agreement, (2) affects traffic delivered to Neutral Tandem from a BellSouth switch, and (3) requires special BellSouth switch translations and other network modifications will require Neutral Tandem to submit a BFR/NBR via the BFR/NBR Process as set forth in this Agreement.

4.5 Recurring and nonrecurring rates associated with interconnecting trunk groups between BellSouth and Neutral Tandem are set forth in Exhibit A. To the extent a rate associated with the interconnecting trunk group is not set forth in Exhibit A, the rate shall be as set forth in the appropriate BellSouth tariff for switched access services.

4.6 For two-way trunk groups that carry only both Parties' Local Traffic, the Parties shall be compensated at 50% of the nonrecurring and recurring rates for dedicated trunks and DS1 facilities. Neutral Tandem shall be responsible for ordering and paying for any two-way trunks carrying Transit Traffic.

4.7 All trunk groups will be provisioned as Signaling System 7 (SS7) capable where technically feasible. If SS7 is not technically feasible, multi-frequency (MF) protocol signaling shall be used.

4.8 In cases where Neutral Tandem is also an IXC, the IXC's Feature Group D (FG D) trunk group(s) must remain separate from the local interconnection trunk group(s).

4.9 Each Party shall order interconnection trunks and trunk group including trunk and trunk group augmentations via the ASR process. A Firm Order Confirmation (FOC) shall be returned to the ordering Party, after receipt of a valid, error free ASR, within the timeframes set forth in each state's applicable Performance Measures. Notwithstanding the foregoing, blocking situations and projects shall be managed through BellSouth's Carrier Interconnection Switching Center (CISC) Project Management Group and Neutral Tandem's equivalent trunking group, and FOCs for such orders shall be returned in the timeframes applicable to the project. A project is defined as (1) a new trunk group or (2) a request for more than 192 trunks on a single or multiple group(s) in a given BellSouth local calling area.

4.10 <u>Interconnection Trunk Groups for Exchange of Local Traffic and Transit Traffic.</u> Upon mutual agreement of the Parties in a joint planning meeting, the Parties shall exchange Local Traffic on two-way interconnection trunk group(s) with the quantity of trunks being mutually determined and the provisioning being jointly coordinated. Furthermore, the Parties shall agree upon the IP(s) for two-way interconnection trunk groups transporting both Parties' Local Traffic, ISP-Bound Traffic and IntraLATA Toll Traffic. Neutral Tandem shall order such two-way trunks via the Access Service Request (ASR) process. BellSouth will use the Trunk Group Service Request (TGSR) to request changes in trunking.

Furthermore, the Parties shall jointly review trunk performance and forecasts in accordance with Section 5.7 of this Attachment. The Parties' use of two-way interconnection trunk groups for the transport of Local Traffic, ISP-Bound Traffic and IntraLATA Toll Traffic between the Parties does not preclude either Party from establishing additional one-way interconnection trunks for the delivery of its originated Local Traffic, ISP-Bound Traffic and IntraLATA Toll Traffic to the other Party. Other trunk groups for operator services, directory assistance and intercept must be established pursuant to the applicable BellSouth tariff if service is requested.

4.10.1 BellSouth Access Tandem Interconnection. BellSouth access tandem interconnection at a single access tandem provides access to those end offices subtending that access tandem (Intratandem Access). Access tandem interconnection is available for any of the following access tandem architectures

4.10.1.1 Basic Architecture. In the basic architecture, Neutral Tandem's originating Local Traffic, ISP-Bound Traffic and IntraLATA Toll Traffic and originating and terminating Transit Traffic is transported on a single two-way trunk group between Neutral Tandem and BellSouth access tandem(s) within a LATA to provide Intratandem Access. This trunk group carries Transit Traffic between Neutral Tandem and Independent Companies, Interexchange Carriers, other CLECs, CMRS providers that have a Meet Point Billing arrangement with BellSouth, and other network providers with which Neutral Tandem desires to exchange traffic. This trunk group also carries Neutral Tandem originated Transit Traffic transiting a single BellSouth access tandem destined to third party tandems such as an Independent Company tandem or other CLEC tandem. BellSouth originated Local Traffic, ISP-Bound Traffic and IntraLATA Toll Traffic is transported on a separate single one-way trunk group terminating to Neutral Tandem. The LERG contains current routing and tandem serving arrangements. The basic Architecture is illustrated in Exhibit B.

4.10.1.2 One-Way Trunk Group Architecture. In one-way trunk group architecture, the Parties interconnect using three separate trunk groups. A one-way trunk group provides Intratandem Access for Neutral Tandem-originated Local Traffic, ISP-Bound Traffic and IntraLATA Toll Traffic destined for BellSouth End Users. A second one-way trunk group carries BellSouth-originated Local Traffic, ISP-Bound Traffic and IntraLATA Toll Traffic destined for Neutral Tandem End-Users. A two-way trunk group provides Intratandem Access for Neutral Tandem's originating and terminating Transit Traffic. This trunk group carries Transit Traffic between Neutral Tandem and Independent Companies, Interexchange Carriers, other CLECs, CMRS providers that have a Meet Point Billing arrangement with BellSouth, and other network providers with which Neutral TandemNeutral Tandemcustomer_short_name exchanges traffic. This trunk group also carries Neutral Tandem originated Transit Traffic transiting a single BellSouth access tandem destined to third party tandems such as an Independent Company tandem or other CLEC tandem. BellSouth originated

Local Traffic, ISP-Bound Traffic and IntraLATA Toll Traffic is transported on a separate single one-way trunk group terminating to Neutral Tandem. The LERG contains current routing and tandem serving arrangements. The one-way trunk group architecture is illustrated in Exhibit C.

4.10.1.3 Two-Way Trunk Group Architecture. The two-way trunk group Architecture establishes one two-way trunk group to provide Intratandem Access for the exchange of Local Traffic, ISP-Bound Traffic and IntraLATA Toll Traffic between Neutral Tandem and BellSouth. In addition, a separate two-way transit trunk group must be established for Neutral Tandem's originating and terminating Transit Traffic. This trunk group carries Transit Traffic between Neutral Tandem and Independent Companies, Interexchange Carriers, other CLECs, CMRS providers that have a Meet Point Billing arrangement with BellSouth, and other network providers with which Neutral Tandem exchanges traffic. This trunk group also carries Neutral Tandem originated Transit Traffic transiting a single BellSouth access tandem destined to third party tandems such as an Independent Company tandem or other CLEC tandem. BellSouth originated traffic may, in order to prevent or remedy traffic blocking situations, be transported on a separate single one-way trunk group terminating to Neutral Tandem. However, where Neutral Tandem is responsive in a timely manner to BellSouth's transport needs for its originated traffic, BellSouth originating traffic will be placed on the two-way Local Traffic trunk group carrying ISP-Bound Traffic and IntraLATA Toll Traffic. The LERG contains current routing and tandem serving arrangements. The two-way trunk group architecture is illustrated in Exhibit D.

4.10.1.4 Supergroup Architecture. In the supergroup architecture, the Parties' Local Traffic, ISP-Bound Traffic and IntraLATA Toll Traffic and Neutral Tandem's Transit Traffic are exchanged on a single two-way trunk group between Neutral Tandem and BellSouth to provide Intratandem Access to Neutral Tandem. This trunk group carries Transit Traffic between Neutral Tandem and Independent Companies, Interexchange Carriers, other CLECs, CMRS providers that have a Meet Point Billing arrangement with BellSouth, and other network providers with which Neutral Tandem desires to exchange traffic. This trunk group also carries Neutral Tandem originated Transit Traffic transiting a single BellSouth access tandem destined to third party tandems such as an Independent Company tandem or other CLEC tandem. BellSouth originated traffic may, in order to prevent or remedy traffic blocking situations, be transported on a separate single one-way trunk group terminating to Neutral Tandem. However, where Neutral Tandem is responsive in a timely manner to BellSouth's transport needs for its originated traffic, BellSouth originating traffic will be placed on the Supergroup. Other trunk groups for operator services, directory assistance, emergency services and intercept must be established pursuant to the applicable BellSouth tariff if service is requested. The LERG contains current routing and tandem serving arrangements. The supergroup architecture is illustrated in Exhibit E.

4.10.1.5 Multiple Tandem Access Interconnection. Where Neutral Tandem does not choose access tandem interconnection at every BellSouth access tandem within a LATA, Neutral Tandem must utilize BellSouth's multiple tandem access interconnection (MTA). To utilize MTA Neutral Tandem must establish an interconnection trunk group(s) at a minimum of one BellSouth access tandem within each LATA as required. BellSouth will route Neutral Tandem's originated Local Traffic, ISP-Bound Traffic and IntraLATA Toll Traffic for LATA wide transport and termination. Neutral Tandem must also establish an interconnection trunk group(s) at all BellSouth access tandems where Neutral Tandem NXXs are homed as described in Section 4.2.1 above. If Neutral Tandem does not have NXXs homed at any particular BellSouth access tandem within a LATA and elects not to establish an interconnection trunk group(s) at such BellSouth access tandem, Neutral Tandem can order MTA in each BellSouth access tandem within the LATA where it does have an interconnection trunk group(s) and BellSouth will terminate Neutral Tandem's Local Traffic, ISP-Bound Traffic and IntraLATA Toll Traffic to End-Users served through those BellSouth access tandems where Neutral Tandem does not have an interconnection trunk group(s). MTA shall be provisioned in accordance with BellSouth's Ordering Guidelines.

4.10.1.5.1 Neutral Tandem may also utilize MTA to route its originated Transit Traffic; provided, however, that MTA may not be utilized to route switched access traffic that transits the BellSouth network to an IXC. Switched access traffic originated by or terminated to Neutral Tandem will be delivered to and from IXCs based on Neutral Tandem's NXX access tandem homing arrangement as specified by Neutral Tandem in the LERG.

4.10.1.5.2 Compensation for MTA shall be at the applicable tandem switching and transport charges specified in Exhibit A to this Attachment and shall be billed in addition to any Call Transport and Termination charges.

4.10.1.5.3 To the extent Neutral Tandem does not purchase MTA in a LATA served by multiple access tandems, Neutral Tandem must establish an interconnection trunk group(s) to every access tandem in the LATA to serve the entire LATA. To the extent Neutral Tandem routes its traffic in such a way that utilizes BellSouth's MTA service without properly ordering MTA, Neutral Tandem shall pay BellSouth the associated MTA charges.

4.10.2 Local Tandem Interconnection. Local Tandem Interconnection arrangement allows Neutral Tandem to establish an interconnection trunk group(s) at BellSouth local tandems for: (1) the delivery of Neutral Tandem-originated Local Traffic and ISP-Bound Traffic transported and terminated by BellSouth to BellSouth end offices served by those BellSouth local tandems, and (2) for local Transit Traffic transported by BellSouth for third party network providers who have also established an interconnection trunk group(s) at those BellSouth local tandems.

4.10.2.1 When a specified local calling area is served by more than one BellSouth local tandem, Neutral Tandem must designate a "home" local tandem for each of its assigned NPA/NXXs and establish trunk connections to such local tandems. Additionally, Neutral Tandem may choose to establish an interconnection trunk group(s) at the BellSouth local tandems where it has no codes homing but is not required to do so. Neutral Tandem may deliver Local Traffic and ISP-Bound Traffic to a "home" BellSouth local tandem that is destined for other BellSouth or third party network provider end offices subtending other BellSouth local tandems in the same local calling area where Neutral Tandem does not choose to establish an interconnection trunk group(s). It is Neutral Tandem's responsibility to enter its own NPA/NXX local tandem homing arrangements into the LERG either directly or via a vendor in order for other third party network providers to determine appropriate traffic routing to Neutral Tandem's codes. Likewise, Neutral Tandem shall obtain its routing information from the LERG.

4.10.2.2 Notwithstanding establishing an interconnection trunk group(s) to BellSouth's local tandems, Neutral Tandem must also establish an interconnection trunk group(s) to BellSouth access tandems within the LATA on which Neutral Tandem has NPA/NXXs homed for the delivery of Interexchange Carrier Switched Access (SWA) and toll traffic, and traffic to Type 2A CMRS connections located at the access tandems. BellSouth shall not switch SWA traffic through more than one BellSouth access tandem. SWA, Type 2A CMRS or toll traffic routed to the local tandem in error will not be backhauled to the BellSouth access tandem for completion. (Type 2A CMRS interconnection is defined in BellSouth's A35 General Subscriber Services Tariff).

4.10.2.3 BellSouth's provisioning of Local Tandem Interconnection assumes that Neutral Tandem has executed the necessary local interconnection agreements with the other third party network providers subtending those local tandems as required by the Act.

4.10.3 Direct End Office-to-End Office Interconnection. Direct End Office-to-End Office one-way or two-way interconnection trunk groups allow for the delivery of a Party's originating Local Traffic, ISP-Bound Traffic and IntraLATA Toll Traffic to the terminating Party on a direct end office-to-end office basis.

4.10.3.1 The Parties shall utilize direct end office-to-end office trunk groups under any one of the following conditions:

4.10.3.1.1 Tandem Exhaust - If a tandem through which the Parties are interconnected is unable to, or is forecasted to be unable to support additional traffic loads for any period of time, the Parties will mutually agree on an end office trunking plan that will alleviate the tandem capacity shortage and ensure completion of traffic between Neutral Tandem and BellSouth.

4.10.3.1.2 Traffic Volume –To the extent either Party has the capability to measure the amount of traffic between Neutral Tandem's switch and a BellSouth end office and where such traffic exceeds or is forecasted to exceed a single DS1 of traffic per month, then the Parties shall install and retain direct end office trunking sufficient to handle such traffic volumes. Either Party will install additional capacity between such points when overflow traffic exceeds or is forecasted to exceed a single DS1 of traffic per month. In the case of one-way trunking, additional trunking shall only be required by the Party whose trunking has achieved the preceding usage threshold.

4.10.3.1.3 Mutual Agreement - The Parties may install direct end office trunking upon mutual agreement in the absence of conditions (1) or (2) above.

4.10.4 Transit Traffic Trunk Group. Transit Traffic trunks can either be two-way trunks or two one-way trunks ordered by Neutral Tandem to deliver and receive Transit Traffic. Establishing Transit Traffic trunks at BellSouth access and local tandems provides intratandem access to the third parties also interconnected at those tandems. Neutral Tandem shall be responsible for all recurring and non-recurring charges associated with Transit Traffic trunks and facilities.

4.10.4.1 Toll Free Traffic. If Neutral Tandem chooses BellSouth to perform the Service Switching Point (SSP) Function (i.e., handle Toll Free database queries) from BellSouth's switches, all Neutral Tandem originating Toll Free traffic will be routed over the Transit Traffic Trunk Group and shall be delivered using GR-394 format. Carrier Code "0110" and Circuit Code (to be determined for each LATA) shall be used for all such calls.

4.10.4.1.1 Neutral Tandem may choose to perform its own Toll Free database queries from its switch. In such cases, Neutral Tandem will determine the nature (local/intraLATA/interLATA) of the Toll Free call (local/IntraLATA/InterLATA) based on the response from the database. If the call is a BellSouth local or intraLATA Toll Free call, Neutral Tandem will route the post-query local or IntraLATA converted ten-digit local number to BellSouth over the local or intraLATA trunk group. If the call is a third party (ICO, IXC, CMRS or other CLEC) local or intraLATA Toll Free call, Neutral Tandem will route the post-query local or intraLATA converted ten-digit local number to BellSouth over the Transit Traffic Trunk Group and Neutral Tandem shall provide to BellSouth a Toll Free billing record when appropriate. If the query reveals the call is an interLATA Toll Free call, Neutral Tandem will route the post-query interLATA Toll Free call (1) directly from its switch for carriers interconnected with its network or (2) over the Transit Traffic Trunk Group to carriers that are not directly connected to Neutral Tandem's network but that are connected to BellSouth's access tandem.

4.10.5 All post-query Toll Free calls for which Neutral Tandem performs the SSP function, if delivered to BellSouth, shall be delivered using GR-394 format for calls

destined to IXCs, and GR-317 format for calls destined to end offices that directly subtend a BellSouth access tandem within the LATA.

5. NETWORK DESIGN AND MANAGEMENT FOR INTERCONNECTION

5.1 Network Management and Changes. The Parties will exchange toll-free maintenance contact numbers and escalation procedures. The Parties will provide public notice of network changes in accordance with applicable federal and state rules and regulations.

5.2 Interconnection Technical Standards. The interconnection of all networks will be based upon accepted industry/national guidelines for transmission standards and traffic blocking criteria. Interconnecting facilities shall conform, at a minimum, to the telecommunications industry standard of DS-1 pursuant to Telcordia Standard No. GR-NWT-00499. Where Neutral Tandem chooses to utilize Signaling System 7 signaling, also known as Common Channel Signaling (SS7), SS7 connectivity is required between the Neutral Tandem switch and the BellSouth Signaling Transfer Point (STP). BellSouth will provide SS7 signaling using Common Channel Signaling Access Capability in accordance with the technical specifications set forth in the BellSouth Guidelines to Technical Publication, GR-905-Core. Facilities of each Party shall provide the necessary on-hook, off-hook answer and disconnect supervision and shall provide calling number ID (Calling Party Number) when technically feasible.

5.3 Network Management Controls. Both Parties will work cooperatively to apply sound network management principles by invoking appropriate network management controls (e.g., call gapping) to alleviate or prevent network congestion.

6. FORECASTING FOR TRUNK PROVISIONING

6.1 Within six (6) months after execution of this Agreement, Neutral Tandem shall provide an initial interconnection trunk group forecast for each LATA in which it plans to provide service within BellSouth's region. Upon receipt of Neutral Tandem's forecast, the Parties shall conduct a joint planning meeting to develop a joint interconnection trunk group forecast. Each forecast provided under this Section shall be deemed "Confidential Information" under the General Terms and Conditions of this Agreement.

6.1.1 At a minimum, the forecast shall include the projected quantity of Transit Trunks, Neutral Tandem-to-BellSouth one-way trunks (Neutral Tandem Trunks), BellSouth-to-Neutral Tandem one-way trunks (BellSouth Trunk Groups) and/or two-way interconnection trunks, if the Parties have agreed to interconnect using two-way trunking to transport the Parties' Local Traffic, ISP-Bound Traffic and IntraLATA Toll Traffic. The quantities shall be projected for a minimum of six months and shall include an estimate of the current year plus the next two years

total forecasted quantities. The Parties shall mutually develop BellSouth Trunk Groups and/or two-way interconnection trunk forecast quantities.

6.1.2 All forecasts shall include, at a minimum, Access Carrier Terminal Location (ACTL), trunk group type (local/intraLATA toll, Transit, Operator Services, 911, etc.), A location/Z location (CLLI codes for Neutral Tandem location and BellSouth location where the trunks shall terminate), interface type (e.g., DS1), Direction of Signaling, Trunk Group Number, if known, (commonly referred to as the 2-6 code) and forecasted trunks in service each year (cumulative).

6.2 Once initial interconnection trunk forecasts have been developed, Neutral Tandem shall continue to provide interconnection trunk forecasts at mutually agreeable intervals. Neutral Tandem shall use its best efforts to make the forecasts as accurate as possible based on reasonable engineering criteria. The Parties shall continue to develop Reciprocal Trunk Group and/or two-way interconnection trunk forecasts as described in Section 6.1.1.

6.3 The submission and development of interconnection trunk forecasts shall not replace the ordering process for local interconnection trunks. Each Party shall exercise its best efforts to provide the quantity of interconnection trunks mutually forecasted. However, the provision of the forecasted quantity of interconnection trunks is subject to trunk terminations and facility capacity existing at the time the trunk order is submitted. Furthermore, the receipt and development of trunk forecasts does not imply any liability for failure to perform if capacity (trunk terminations or facilities) is not available for use at the forecasted time.

6.4 Trunk Utilization. For the BellSouth Trunk Groups that are Final Trunk Groups (BellSouth Final Trunk Groups), BellSouth and Neutral Tandem shall monitor traffic on each Bellsouth Final Trunk Group that is ordered and installed. The Parties agree that the BellSouth Final Trunk Groups will be utilized at 60 percent (60%) of the time consistent busy hour utilization level within 90 days of installation. The Parties agree that the BellSouth Final Trunk Groups will be utilized at eighty percent (80%) of the time consistent busy hour utilization level within 180 days of installation. Any BellSouth Final Trunk Group not meeting the minimum thresholds set forth in this Section are defined as "Under-utilized" trunks. BellSouth may disconnect any Under-utilized BellSouth Final Trunk Groups and Neutral Tandem shall refund to BellSouth the associated nonrecurring and recurring trunk and facility charges paid by BellSouth, if any.

6.4.1 BellSouth's CISC will notify Neutral Tandem of any under-utilized BellSouth Trunk Groups and the number of such trunk groups that BellSouth wishes to disconnect. BellSouth will provide supporting information either by email or facsimile to the designated Neutral Tandem interface. Neutral Tandem will provide concurrence with the disconnection in seven (7) business days or will provide specific information supporting why the trunks should not be disconnected. Such supporting information should include expected traffic

volumes (including traffic volumes generated due to Local Number Portability) and the timeframes within which Neutral Tandem expects to need such trunks. BellSouth's CISC Project Manager and Circuit Capacity Manager (CCM) will discuss the information with Neutral Tandem to determine if agreement can be reached on the number of BellSouth Final Trunk Groups to be removed. If no agreement can be reached, BellSouth will issue disconnect orders to Neutral Tandem. The due date of these orders will be four weeks after Neutral Tandem was first notified in writing of the underutilization of the trunk groups.

6.4.2 To the extent that any interconnection trunk group is utilized at a time-consistent busy hour of eighty percent (80%) or greater, the Parties may review the trunk groups and, if necessary, shall negotiate in good faith for the installation of augmented facilities.

6.4.3 For the two-way trunk groups, BellSouth and Neutral Tandem shall monitor traffic on each interconnection trunk group that is ordered and installed. The Parties agree that within 90 days of the installation of the BellSouth two-way trunk or trunks, the trunks will be utilized at 60 percent (60%) of the time consistent busy hour utilization level. The Parties agree that within 180 days of the installation of a trunk or trunks, the trunks will be utilized at eighty percent (80%) of the time consistent busy hour utilization level. Any trunk or trunks not meeting the minimum thresholds set forth in this Section are defined as "Under-utilized" trunks. BellSouth will request the disconnection of any Under-utilized two-way trunk(s) and Neutral Tandem shall refund to BellSouth the associated nonrecurring and recurring trunk and facility charges paid by BellSouth, if any.

6.4.3.1 BellSouth's CISC will notify Neutral Tandem of any under-utilized two-way trunk groups and the number of trunks that BellSouth wishes to disconnect. BellSouth will provide supporting information either by email or facsimile to the designated Neutral Tandem interface. Neutral Tandem will provide concurrence with the disconnection in seven (7) business days or will provide specific information supporting why the two-way trunks should not be disconnected. Such supporting information should include expected traffic volumes (including traffic volumes generated due to Local Number Portability) and the timeframes within which Neutral Tandem expects to need such trunks. BellSouth's CISC Project Manager and CCM will discuss the information with Neutral Tandem to determine if agreement can be reached on the number of trunks to be removed. If no agreement can be reached, Neutral Tandem will issue disconnect orders to BellSouth. The due date of these orders will be four weeks after Neutral Tandem was first notified in writing of the underutilization of the trunk groups.

6.4.3.2 To the extent that any interconnection trunk group is utilized at a time-consistent busy hour of eighty percent (80%) or greater, the Parties may review the trunk groups and, if necessary, shall negotiate in good faith for the installation of augmented facilities.

7. LOCAL DIALING PARITY

7.1 BellSouth and Neutral Tandem shall provide local and toll dialing parity, as defined in FCC rules and regulations, with no unreasonable dialing delays. Dialing parity shall be provided for all originating telecommunications services that require dialing to route a call.

8. INTERCONNECTION COMPENSATION

8.1 Compensation for Call Transportation and Termination for Local Traffic, ISP-Bound Traffic and IntraLATA Toll Traffic

8.1.1 For the purposes of this Attachment and for intercarrier compensation for Local Traffic exchanged between the Parties pursuant to this Attachment, Local Traffic is defined as any telephone call that originates in one exchange and terminates in either the same exchange, or other local calling area associated with the originating exchange as defined and specified in Section A3 of BellSouth's General Subscriber Service Tariff.

8.1.1.1 Additionally, Local Traffic includes any cross boundary, voice-to-voice intrastate, interLATA or interstate, interLATA calls established as a local call by the ruling regulatory body.

8.1.2 For purposes of this Attachment and for intercarrier compensation for ISP-Bound Traffic exchanged between the Parties, ISP-Bound Traffic is defined as calls to an information service provider or Internet service provider (ISP) that are dialed by using a local dialing pattern (7 or 10 digits) by a calling party in one exchange to an ISP server or modem in either the same exchange or other local calling area associated with the originating exchange as defined and specified in Section A3 of BellSouth's General Subscriber Service tariff. ISP-Bound Traffic is not Local Traffic subject to reciprocal compensation, but instead is information access traffic subject to the FCC's jurisdiction.

8.1.3 Neither Party shall pay compensation to the other Party for per minute of use rate elements as set forth in Exhibit A associated with the Call Transport and Termination of Local Traffic or ISP-Bound Traffic.

8.1.4 The appropriate elemental rates set forth in Exhibit A of this Attachment shall apply for Transit Traffic as described in this Attachment and for Multiple Tandem Access as described in this Attachment.

8.1.5 Neither Party shall represent Switched Access Traffic as Local Traffic or ISP-Bound Traffic for purposes of determining compensation for the call.

8.1.6 IntraLATA Toll Traffic is defined as all traffic, regardless of transport protocol method, that originates and terminates within a single LATA that is not Local Traffic or ISP-Bound traffic under this Attachment.

8.1.6.1 For terminating its intraLATA toll traffic on the other Party's network, the originating Party will pay the terminating Party BellSouth's current intrastate or interstate, whichever is appropriate, terminating switched access tariff rates as set forth in BellSouth's Access Services Tariffs as filed and in effect with the FCC or appropriate Commission. The appropriate charges will be determined by the routing of the call. Additionally, if one Party is the other Party's End User's presubscribed interexchange carrier or if one Party's End User uses the other Party as an interexchange carrier on a 101XXXX basis, the originating party will charge the other Party the appropriate BellSouth originating switched access tariff rates as set forth in BellSouth's Intrastate or Interstate Access Services Tariff as filed and in effect with the FCC or appropriate Commission.

8.1.7 If Neutral Tandem assigns NPA/NXXs to specific BellSouth rate centers within the LATA and assigns numbers from those NPA/NXXs to Neutral Tandem End Users physically located outside of that LATA, BellSouth traffic originating from within the LATA where the NPA/NXXs are assigned and delivered to a Neutral Tandem customer physically located outside of such LATA, shall not be deemed Local Traffic. Further, Neutral Tandem agrees to identify such interLATA traffic to BellSouth and to compensate BellSouth for originating and transporting such interLATA traffic to Neutral Tandem at BellSouth's switched access tariff rates.

8.2 If Neutral Tandem does not identify such interLATA traffic to BellSouth, BellSouth will determine which whole Neutral Tandem NPA/NXXs on which to charge the applicable rates for originating network access service as reflected in BellSouth's Access Service Tariff. BellSouth shall make appropriate billing adjustments if Neutral Tandem can provide sufficient information for BellSouth to determine whether or not said traffic is Local or ISP-Bound Traffic.

8.3 Jurisdictional Reporting

8.3.1 Percent Local Use. Each Party shall report to the other a Percent Local Usage (PLU) factor. The application of the PLU will determine the amount of local or ISP-Bound minutes to be billed to the other Party. Each Party shall update its PLU on the first of January, April, July and October of the year and shall send it to the other Party to be received no later than 30 days after the first of each such month based on local and ISP-Bound usage for the past three months ending the last day of December, March, June and September, respectively. Requirements associated with PLU calculation and reporting shall be as set forth in BellSouth's Jurisdictional Factors Reporting Guide, as it is amended from time to time.

8.3.2 Percent Local Facility. Each Party shall report to the other a Percent Local Facility (PLF) factor. The application of the PLF will determine the portion of switched dedicated transport to be billed per the local jurisdiction rates. The PLF shall be applied to Multiplexing, Local Channel and Interoffice Channel Switched Dedicated Transport utilized in the provision of local interconnection trunks. Each Party shall update its PLF on the first of January, April, July and October of the

year and shall send it to the other Party to be received no later than 30 days after the first of each such month to be effective the first bill period the following month, respectively. Requirements associated with PLF calculation and reporting shall be as set forth in BellSouth's Jurisdictional Factors Reporting Guide, as it is amended from time to time.

8.3.3 Percent Interstate Usage. Each Party shall report to the other the projected Percent Interstate Usage (PIU) factors. All jurisdictional report requirements, rules and regulations for Interexchange Carriers specified in BellSouth's Intrastate Access Services Tariff will apply to Neutral Tandem. After interstate and intrastate traffic percentages have been determined by use of PIU procedures, the PLU and PLF factors will be used for application and billing of local interconnection. Each Party shall update its PIUs on the first of January, April, July and October of the year and shall send it to the other Party to be received no later than 30 days after the first of each such month, for all services showing the percentages of use for the past three months ending the last day of December, March, June and September. Additional requirements associated with PIU calculations and reporting shall be as set forth in BellSouth's Jurisdictional Factors Reporting Guide as it is amended from time to time.

8.3.4 Notwithstanding the provisions in Section 8.3.1, 8.3.2, and 8.3.3 above, where the terminating Party has message recording technology that identifies the jurisdiction of traffic terminated as defined in this Agreement, such information shall, at the terminating Party's option, be utilized to determine the appropriate jurisdictional reporting factors (PLU, PIU, and/or PLF), in lieu of those provided by the originating Party. In the event that the terminating Party opts to utilize its own data to determine jurisdictional reporting factors, such terminating Party shall notify the originating Party at least 15 days prior to the beginning of the calendar quarter in which the terminating Party will begin to utilize its own data. Such factors shall be subject to the Dispute Resolution provisions in this Agreement, as well as the Audit provisions set forth in 8.3.5 below.

8.3.5 Audits. On thirty (30) days written notice, each Party must provide the other the ability and opportunity to conduct an annual audit to ensure the proper billing of traffic. BellSouth and Neutral Tandem shall retain records of call detail for a minimum of nine months from which the PLU, PLF and/or PIU can be ascertained. The audit shall be conducted during normal business hours at an office designated by the Party being audited. Audit requests shall not be submitted more frequently than one (1) time per calendar year. Audits shall be performed by a mutually acceptable independent auditor paid for by the Party requesting the audit. The PLF, PLU and/or PIU shall be adjusted based upon the audit results and shall apply for the quarter the audit was completed, for the quarter prior to the completion of the audit, and for the two quarters following the completion of the audit. If, as a result of an audit, either Party is found to have overstated the PLF, PLU and/or PIU by twenty percentage points (20%) or more, that Party shall reimburse the auditing Party for the cost of the audit.

8.4 Compensation for 8XX Traffic. When a Neutral Tandem End User places an 8XX call, BellSouth will charge the originating switched access and data query charges as set forth in the applicable BellSouth Tariff to the IXC that is responsible for terminating the 8XX to the appropriate Wide Area Telecommunications Service (WATS) or Plain Old Telephone Service (POTS) number. Neutral Tandem will be responsible for any applicable Common Channel Signaling (SS7).

8.4.1 Records for 8XX Billing. Where technically feasible, each Party will provide to the other Party the appropriate records, in accordance with industry standards, necessary for billing intraLATA 8XX customers. The records provided will be in a standard EMI format.

8.4.2 8XX Access Screening. BellSouth's provision of 8XX Toll Free Dialing (TFD) to Neutral Tandem requires interconnection from Neutral Tandem to BellSouth's 8XX Signal Channel Point (SCP). Such interconnections shall be established pursuant to BellSouth's Common Channel Signaling Interconnection Guidelines and Telcordia's CCS Network Interface Specification document, TR-TSV-000905. Neutral Tandem shall establish SS7 interconnection at the BellSouth Local Signal Transfer Points serving the BellSouth 8XX SCPs that Neutral Tandem desires to query. The terms and conditions for 8XX TFD are set out in BellSouth's Intrastate Access Services Tariff.

8.5 Mutual Provision of Switched Access Service

8.5.1 Switched Access Traffic. Switched Access Traffic is described as telephone calls requiring local transmission or switching services for the purpose of the origination or termination of Telephone Toll Service. Switched Access Traffic includes, but is not limited to, the following types of traffic: Feature Group A, Feature Group B, Feature Group C, Feature Group D, toll free access (e.g., 8XX), 900 access and their successors. Additionally, any Public Switched Telephone Network interexchange telecommunications traffic, regardless of transport protocol method, where the originating and terminating points, end-to-end points, are in different LATAs, or are in the same LATA and the Parties' Switched Access services are used for the origination or termination of the call, shall be considered Switched Access Traffic. Irrespective of transport protocol method used, a call which originates in one LATA and terminates in another LATA (i.e., the end-to-end points of the call) or in which the Parties' Switched Access Services are used for the origination or termination of the call, shall be considered Switched Access Traffic.

8.5.2 If a BellSouth End User chooses Neutral Tandem as their presubscribed interexchange carrier, or if a BellSouth End User uses Neutral Tandem as an interexchange carrier on a 101XXXX basis, BellSouth will charge Neutral Tandem the appropriate BellSouth tariff charges for originating switched access services.

8.5.3 Where the originating Party delivers a call to the terminating Party over switched access facilities, the originating Party will pay the terminating Party terminating, switched access charges as set forth in BellSouth's Intrastate or Interstate Access Services Tariff, as appropriate.

8.5.4 When Neutral Tandem's end office switch provides an access service connection to or from an IXC by a direct trunk group to the IXC utilizing BellSouth facilities, each Party will provide its own access services to the IXC and bill on a multi-bill, multi-tariff meet-point basis. Each Party will bill its own access services rates to the IXC with the exception of the interconnection charge. The interconnection charge will be billed by Neutral Tandem as the Party providing the end office function. Each party will use the Multiple Exchange Carrier Access Billing (MECAB) guidelines to establish meet point billing for all applicable traffic. The Parties shall utilize a thirty (30) day billing period.

8.5.4.1 When Neutral Tandem's end office subtends the BellSouth Access Tandem switch for receipt or delivery of switched access traffic and provides an access service connection to or from an IXC via BellSouth's Access Tandem switch, BellSouth, as the tandem company agrees to provide to Neutral Tandem, as the End Office Company, as defined in MECAB, at no charge, all the switched access detail usage data, recorded at the access tandem, within no more than sixty (60) days after the recording date. Each Party will notify the other when it is not feasible to meet these requirements. As business requirements change, data reporting requirements may be modified as necessary.

8.5.5 BellSouth, as the tandem provider company, will retain for a minimum period of sixty (60) days, access message detail sufficient to recreate any data that is lost or damaged by the tandem provider company or any third party involved in processing or transporting data.

8.5.6 BellSouth, as the tandem provider company, agrees to recreate the lost or damaged data within forty-eight (48) hours of notification by the other or by an authorized third party handling the data.

8.5.7 Any claims against BellSouth, as the tandem provider company, for unbillable or uncollectible revenue should be filed with the tandem provider company within 120 days of the usage date.

8.5.8 BellSouth, as the tandem provider company shall keep records of its billing activities relating to jointly-provided Intrastate and Interstate access services in sufficient detail to permit the Subsequent Billing Party to, by formal or informal review or audit, to verify the accuracy and reasonableness of the jointly-provided access billing data provided by the Initial Billing Party. Each Party agrees to cooperate in such formal or informal reviews or audits and further agrees to jointly review the findings of such reviews or audits in order to resolve any differences concerning the findings thereof.

8.5.9 Neutral Tandem agrees not to deliver switched access traffic to BellSouth for termination except over Neutral Tandem ordered switched access trunks and facilities.

8.6 Transit Traffic. BellSouth shall provide tandem switching and transport services for Transit Traffic as defined in this Attachment 3. BellSouth shall charge Neutral Tandem for local Transit Traffic and ISP-Bound Transit Traffic at the applicable rates as set forth in Exhibit A to this Attachment. BellSouth shall charge Neutral Tandem for Switched Access Transit Traffic at the applicable charges as set forth in BellSouth Interstate or Intrastate Switched Access tariffs. Billing associated with all Transit Traffic shall be pursuant to MECAB guidelines. Traffic between Neutral Tandem and Wireless Type 1 third parties or a third party CLEC utilizing BellSouth switching shall not be treated as Transit Traffic from a routing or billing perspective. Traffic between Neutral Tandem and Wireless Type 2A shall not be treated as Transit Traffic from a routing or billing perspective until BellSouth and the Wireless carrier have the capability to properly meet-point-bill in accordance with MECAB guidelines.

8.6.1 The delivery of traffic that transits the BellSouth network and is transported to another carrier's network is excluded from any BellSouth billing guarantees. BellSouth agrees to deliver Transit Traffic to the terminating carrier; provided, however, that Neutral Tandem is solely responsible for negotiating and executing any appropriate contractual agreements with the terminating carrier for the exchange of Transit Traffic through the BellSouth network. BellSouth will not be liable for any compensation to the terminating carrier or to Neutral Tandem. In the event that the terminating third party carrier imposes on BellSouth any charges or costs for the delivery of Transit Traffic, Neutral Tandem shall reimburse BellSouth for such charges or costs. Additionally, the Parties agree that any billing to a third party or other Telecommunications carrier under this section shall be pursuant to MECAB procedures.

8.6.2 Notwithstanding the foregoing, to the extent Neutral Tandem offers transit services and BellSouth elects to purchase those services from Neutral Tandem, the Parties will negotiate and execute a separate agreement or an amendment to this Agreement governing the rates, terms, and conditions of such transit services.

9. FRAME RELAY SERVICE INTERCONNECTION

9.1 In addition to the Local Interconnection services set forth above, BellSouth will offer a network to network Interconnection arrangement between BellSouth's and Neutral Tandem's frame relay switches as set forth below. The following provisions will apply only to Frame Relay Service and Exchange Access Frame Relay Service and Managed Shared Frame Relay Service in those states in which Neutral Tandem is certified and providing Frame Relay Service as a Local

Exchange Carrier and where traffic is being exchanged between Neutral Tandem and BellSouth Frame Relay Switches in the same LATA.

9.2 The Parties agree to establish two-way Frame Relay facilities between their respective Frame Relay Switches to the mutually agreed upon Frame Relay Service point(s) of interconnection (IP(s)) within the LATA. All IPs shall be within the same Frame Relay Network Serving Areas as defined in Appendix A of BellSouth's FCC Tariff No. 1 except as set forth in this Attachment.

9.3 Upon the request of either Party, such interconnection will be established where BellSouth and Neutral Tandem have Frame Relay Switches in the same LATA. Where there are multiple Frame Relay switches in one central office, an interconnection with any one of the switches will be considered an interconnection with all of the switches at that central office for purposes of routing packet traffic.

9.4 The Parties agree to provision local (intraLATA) Frame Relay Service and Exchange Access Frame Relay Service and Managed Shared Frame Relay Service (both intrastate and interstate) over Frame Relay interconnection facilities between the respective Frame Relay switches and the IPs.

9.5 The Parties agree to assess each other reciprocal charges for the facilities that each provides to the other according to the Percent Local Circuit Use Factor (PLCU), determined as follows:

9.5.1 If the data packets originate and terminate in locations in the same LATA, and are consistent with the local definitions of the Agreement, the traffic is considered local. Frame Relay framed packet data is transported within Virtual Circuits (VC). For the purposes of this Agreement, if all the data packets transported within a VC remain within the LATA, then consistent with the local definitions in this Agreement, the traffic on that VC is local (Local VC).

9.5.2 If the originating and terminating locations of the two-way packet data traffic are not in the same LATA, the traffic on that VC is interLATA (InterLATA VC).

9.5.3 The PLCU is determined by dividing the total number of Local VCs, by the total number of VCs on each Frame Relay facility. To facilitate implementation, Neutral Tandem may determine its PLCU in aggregate, by dividing the total number of Local VCs in a given LATA by the total number VCs in that LATA. The Parties agree to renegotiate the method for determining PLCU, at BellSouth's request, and within 90 days, if BellSouth notifies Neutral Tandem that it has found that this method does not adequately represent the PLCU.

9.5.4 If there are no VCs on a facility when it is billed, the PLCU will be zero.

9.5.5 BellSouth will provide the circuit between the Parties' respective Frame Relay Switches. The Parties will be compensated as follows: BellSouth will invoice, and

Neutral Tandem will pay, the total nonrecurring and recurring charges for the circuit based upon the rates set forth in BellSouth's Interstate Access Tariff, FCC No. 1. Neutral Tandem will then invoice, and BellSouth will pay, an amount calculated by multiplying the BellSouth billed charges for the circuit by one-half of Neutral Tandem's PLCU.

9.6 The Parties agree to compensate each other for Frame Relay network-to-network interface (NNI) ports based upon the NNI rates set forth in BellSouth's Interstate Access Tariff, FCC No. 1. Compensation for each pair of NNI ports will be calculated as follows: BellSouth will invoice, and Neutral Tandem will pay, the total nonrecurring and recurring charges for the NNI port. Neutral Tandem will then invoice, and BellSouth will pay, an amount calculated by multiplying the BellSouth billed nonrecurring and recurring charges for the NNI port by Neutral Tandem's PLCU.

9.7 Each Party agrees that there will be no charges to the other Party for its own subscriber's Permanent Virtual Circuit (PVC) rate elements for the local PVC segment from its Frame Relay switch to its own subscriber's premises. PVC rate elements include the Data Link Connection Identifier (DLCI) and Committed Information Rate (CIR).

9.8 For the PVC segment between the Neutral Tandem and BellSouth Frame Relay switches, compensation for the PVC charges is based upon the rates in BellSouth's Interstate Access Tariff, FCC No. 1.

9.9 Compensation for PVC rate elements will be calculated as follows:

9.9.1 If Neutral Tandem orders a VC connection between a BellSouth subscriber's PVC segment and a PVC segment from the BellSouth Frame Relay switch to the Neutral Tandem Frame Relay switch, BellSouth will invoice, and Neutral Tandem will pay, the total nonrecurring and recurring PVC charges for the PVC segment between the BellSouth and Neutral Tandem Frame Relay switches. If the VC is a Local VC, Neutral Tandem will then invoice and BellSouth will pay, the total nonrecurring and recurring PVC charges billed for that segment. If the VC is not local, no compensation will be paid to Neutral Tandem for the PVC segment.

9.9.2 If BellSouth orders a Local VC connection between a Neutral Tandem subscriber's PVC segment and a PVC segment from the Neutral Tandem Frame Relay switch to the BellSouth Frame Relay switch, BellSouth will invoice, and Neutral Tandem will pay, the total nonrecurring and recurring PVC and CIR charges for the PVC segment between the BellSouth and Neutral Tandem Frame Relay switches. If the VC is a Local VC, Neutral Tandem will then invoice and BellSouth will pay the total nonrecurring and recurring PVC and CIR charges billed for that segment. If the VC is not local, no compensation will be paid to Neutral Tandem for the PVC segment.

9.9.3 The Parties agree to compensate each other for requests to change a PVC segment or PVC service order record, according to the Feature Change charge as set forth in the BellSouth access tariff BellSouth Tariff FCC No. 1.

9.9.4 If Neutral Tandem requests a change, BellSouth will invoice and Neutral Tandem will pay a Feature Change charge for each affected PVC segment.

9.9.4.1 If BellSouth requests a change to a Local VC, Neutral Tandem will invoice and BellSouth will pay a Feature Change charge for each affected PVC segment.

9.9.5 The Parties agree to limit the sum of the CIR for the VCs on a DS1 NNI port to not more than three times the port speed, or not more than six times the port speed on a DS3 NNI port.

9.9.6 Except as expressly provided herein, this Agreement does not address or alter in any way either Party's provision of Exchange Access Frame Relay Service, Managed Shared Frame Relay Service or interLATA Frame Relay Service. All charges by each Party to the other for carriage of Exchange Access Frame Relay Service or interLATA Frame Relay Service are included in the BellSouth access tariff BellSouth Tariff FCC No. 1.

9.10 Neutral Tandem will identify and report quarterly to BellSouth the PLCU of the Frame Relay facilities it uses, per Section 9.5.3 above.

9.11 Either Party may request a review or audit of the various service components, consistent with the provisions of section E2 of the BellSouth State Access Services tariffs or Section 2 of the BellSouth FCC No.1 Tariff.

10. ORDERING CHARGES

10.1 The facilities purchased pursuant to this Attachment shall be ordered via the Access Service Request (ASR) process.

10.2 The rates, terms and conditions associated with submission and processing of ASRs are as set forth in BellSouth's FCC No. 1 Tariff, Section 5.

11. BASIC 911 AND E911 INTERCONNECTION

11.1 Basic 911 and E911 provides a caller access to the applicable emergency service bureau by dialing 911.

11.2 Basic 911 Interconnection. BellSouth will provide to Neutral Tandem a list consisting of each municipality that subscribes to Basic 911 service. The list will also provide, if known, the E911 conversion date for each municipality and, for network routing purposes, a ten-digit directory number representing the appropriate emergency answering position for each municipality subscribing to 911. Neutral Tandem will be required to arrange to accept 911 calls from its end

users in municipalities that subscribe to Basic 911 service and translate the 911 call to the appropriate 10-digit directory number as stated on the list provided by BellSouth. Neutral Tandem will be required to route that call to the appropriate Public Safety Answering Point (PSAP). When a municipality converts to E911 service, Neutral Tandem will be required to begin using E911 procedures.

11.3 E911 Interconnection. Neutral Tandem shall install a minimum of two dedicated trunks originating from its Serving Wire Center and terminating to the appropriate E911 tandem. The Serving Wire Center must be in the same LATA as the E911 tandem. The dedicated trunks shall be, at a minimum, DS0 level trunks configured as part of a digital (1.544 Mb/s) interface (DS1 facility). The configuration shall use CAMA-type signaling with multifrequency (MF) pulsing or SS7/ISUP signaling either of which shall deliver ANI with the voice portion of the call. If SS7/ISUP connectivity is used, Neutral Tandem shall follow the procedures as set forth in Appendix A of the CLEC Users Guide to E911 for Facility Based Providers that is located on the BellSouth Interconnection website. If the user interface is digital, MF pulses as well as other AC signals shall be encoded per the u-255 Law convention. Neutral Tandem will be required to provide BellSouth daily updates to the E911 database. Neutral Tandem will be required to forward 911 calls to the appropriate E911 tandem along with ANI based upon the current E911 end office to tandem homing arrangement as provided by BellSouth. If the E911 tandem trunks are not available, Neutral Tandem will be required to route the call to a designated 7-digit or 10-digit local number residing in the appropriate PSAP. This call will be transported over BellSouth's interoffice network and will not carry the ANI of the calling party. Neutral Tandem shall be responsible for providing BellSouth with complete and accurate data for submission to the 911/E911 database for the purpose of providing 911/E911 to its end users.

11.4 Trunks and facilities for 911 Interconnection may be ordered by Neutral Tandem from BellSouth pursuant to the terms and conditions set forth in this Attachment at the rates set forth in Exhibit A hereto.

11.5 The detailed practices and procedures for 911/E911 interconnection are contained in the E911 Local Exchange Carrier Guide For Facility-Based Providers that is located on the BellSouth Interconnection Services Web site.

12. SS7 NETWORK INTERCONNECTION

12.1 SS7 Signaling. Both Parties will utilize LEC-to-LEC SS7 Signaling, where available, in conjunction with all traffic in order to enable interoperability of CLASS features and functions except for call return. SS7 signaling parameters will be provided, including but not limited to automatic number identification (ANI), originating line information (OLI) calling company category and charge number. Privacy indicators will be honored, and the Parties will exchange Transactional Capabilities Application Part (TCAP) messages to facilitate SS7-based features between the respective networks. Neither Party shall alter the SS7

parameters, or be a party to altering such parameters, or knowingly pass SS7 parameters that have been altered in order to circumvent appropriate interconnection charges. Nothing herein shall obligate or otherwise require BellSouth to send SS7 messages or call-related database queries to Neutral Tandem's or any other third-party's call-related database, unless otherwise agreed to by the Parties under a separate agreement.

12.2 Signaling Call Information. BellSouth and Neutral Tandem will send and receive 10 digits for Local Traffic. Additionally, BellSouth and Neutral Tandem will exchange the proper call information, i.e. originated call company number and destination call company number, CIC, and OZZ, including all proper translations for routing between networks and any information necessary for billing.

12.3 SS7 Network Interconnection is the interconnection of Neutral Tandem local signaling transfer point switches or Neutral Tandem local or tandem switching systems with BellSouth signaling transfer point switches. This interconnection provides connectivity that enables the exchange of SS7 messages among BellSouth switching systems and databases, Neutral Tandem local or tandem switching systems, and other third-party switching systems directly connected to the BellSouth SS7 network.

12.3.1 The connectivity provided by SS7 Network Interconnection shall fully support the functions of BellSouth switching systems and databases and Neutral Tandem or other third-party switching systems with A-link access to the BellSouth SS7 network.

12.3.2 If traffic is routed based on dialed or translated digits between a Neutral Tandem local switching system and a BellSouth or other third-party local switching system, either directly or via a BellSouth tandem switching system, then it is a requirement that the BellSouth SS7 network convey via SS7 Network Interconnection the TCAP messages that are necessary to provide Call Management services (Automatic Callback, Automatic Recall, and Screening List Editing) between the Neutral Tandem local signaling transfer point switches and BellSouth or other third-party local switch.

12.3.3 SS7 Network Interconnection shall provide:

12.3.4 Signaling Data Link functions, as specified in ANSI T1.111.2;

12.3.5 Signaling Link functions, as specified in ANSI T1.111.3; and

12.3.6 Signaling Network Management functions, as specified in ANSI T1.111.4.

12.3.7 SS7 Network Interconnection shall provide all functions of the SCCP necessary for Class 0 (basic connectionless) service as specified in ANSI T1.112. This includes GTT and SCCP Management procedures as specified in ANSI T1.112.4.

Where the destination signaling point is a BellSouth switching system or DB, or is another third-party local or tandem switching system directly connected to the BellSouth SS7 network, SS7 Network Interconnection shall include final GTT of messages to the destination and SCCP Subsystem Management of the destination. Where the destination signaling point is a Neutral Tandem local or tandem switching system, SS7 Network Interconnection shall include intermediate GTT of messages to a gateway pair of Neutral Tandem local STPs and shall not include SCCP Subsystem Management of the destination.

12.3.8 SS7 Network Interconnection shall provide all functions of the Integrated Services Digital Network User Part as specified in ANSI T1.113.

12.3.9 SS7 Network Interconnection shall provide all functions of the TCAP as specified in ANSI T1.114.

12.3.10 If Internetwork MRVT and SRVT become approved ANSI standards and available capabilities of BellSouth STPs, SS7 Network Interconnection may provide these functions of the OMAP.

12.4 Interface Requirements. The following SS7 Network Interconnection interface options are available to connect Neutral Tandem or Neutral Tandem-designated local or tandem switching systems or signaling transfer point switches to the BellSouth SS7 network:

12.4.1 A-link interface from Neutral Tandem local or tandem switching systems; and

12.4.2 B-link interface from Neutral Tandem STPs.

12.4.3 The Signaling Point of Interconnection for each link shall be located at a cross-connect element in the central office where the BellSouth STP is located. There shall be a DS1 or higher rate transport interface at each of the Signaling Points of interconnection. Each signaling link shall appear as a DS0 channel within the DS1 or higher rate interface.

12.4.4 BellSouth shall provide intraoffice diversity between the Signaling Points of Interconnection and the BellSouth STP, so that no single failure of intraoffice facilities or equipment shall cause the failure of both B-links in a layer connecting to a BellSouth STP.

12.4.5 The protocol interface requirements for SS7 Network Interconnection include the MTP, ISDNUP, SCCP, and TCAP. These protocol interfaces shall conform to the applicable industry standard technical references.

12.4.6 BellSouth shall set message screening parameters to accept messages from Neutral Tandem local or tandem switching systems destined to any signaling point in the BellSouth SS7 network with which the Neutral Tandem switching system has a valid signaling relationship.

Exhibit B

Basic Architecture

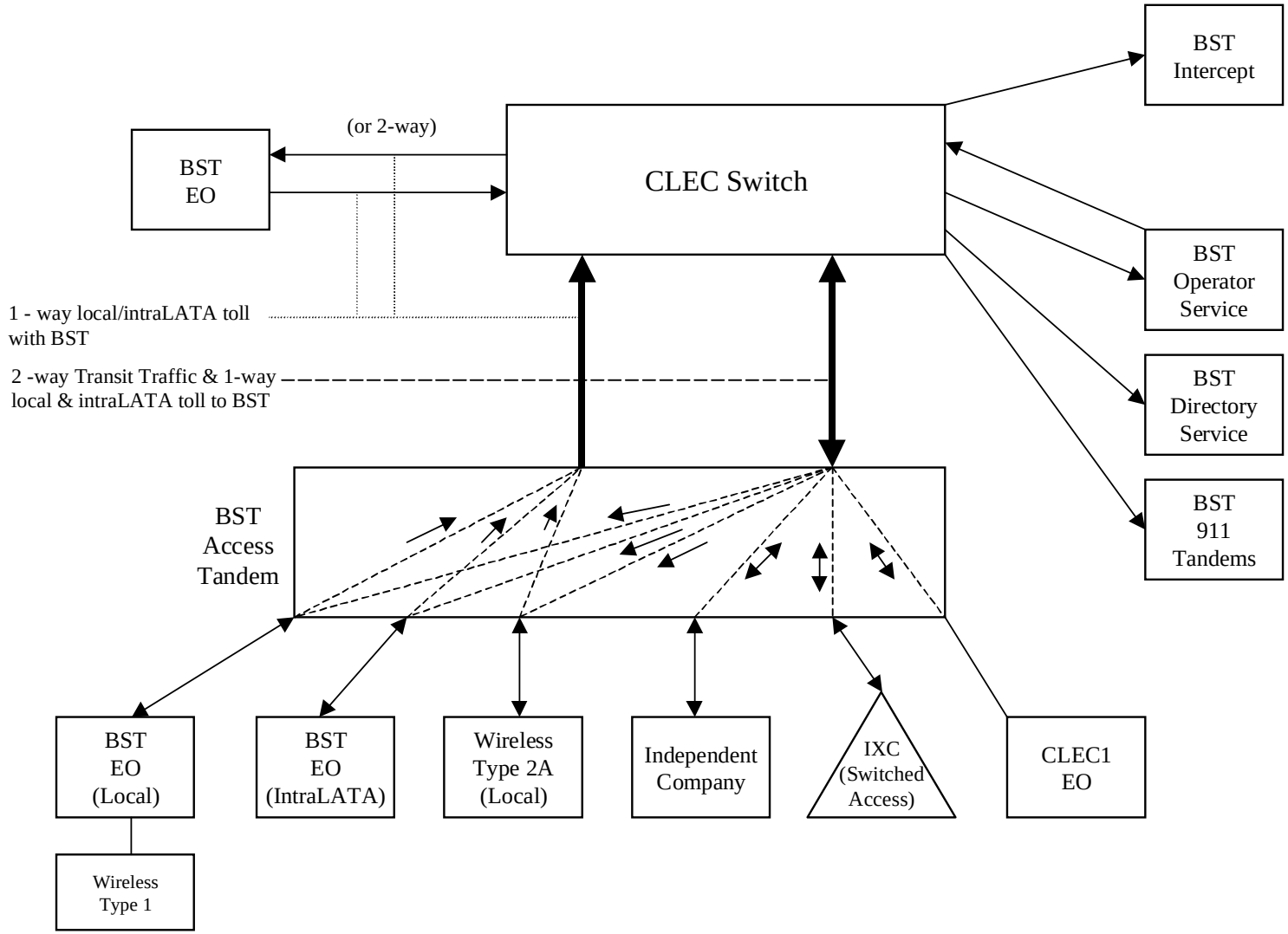

Exhibit C

One-Way Architecture

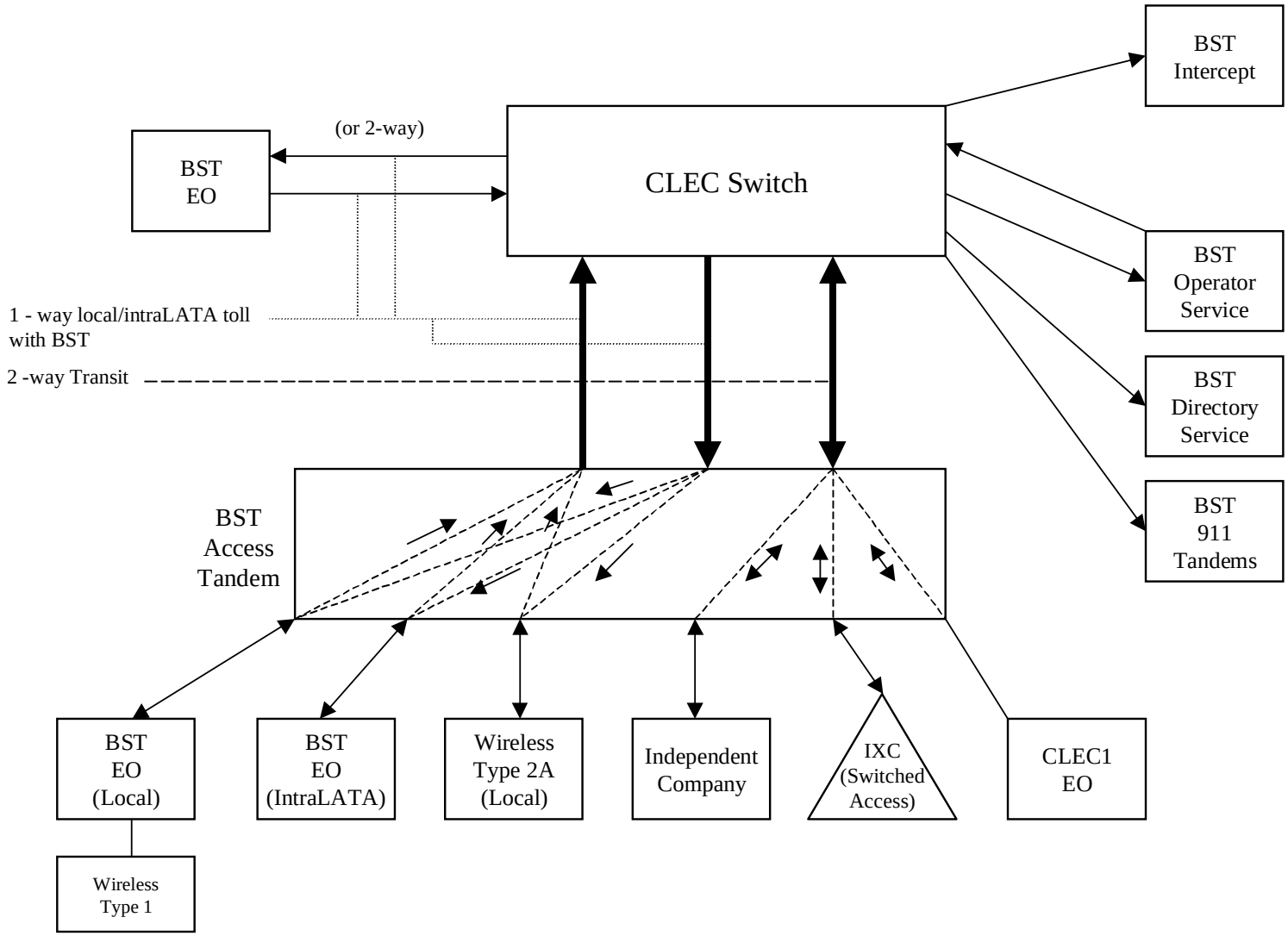

Exhibit D

Two-Way Architecture

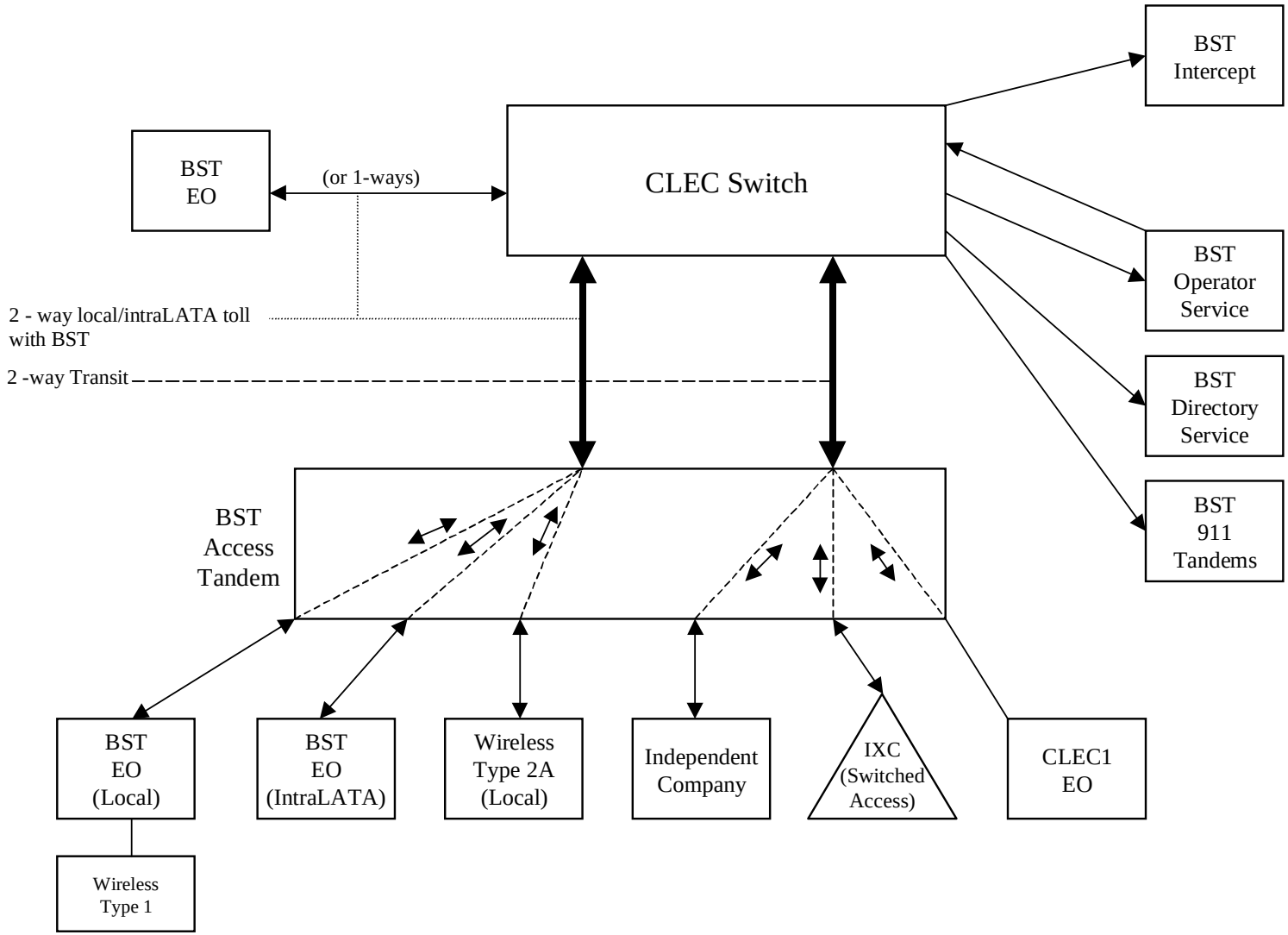

Exhibit E

Supergroup Architecture

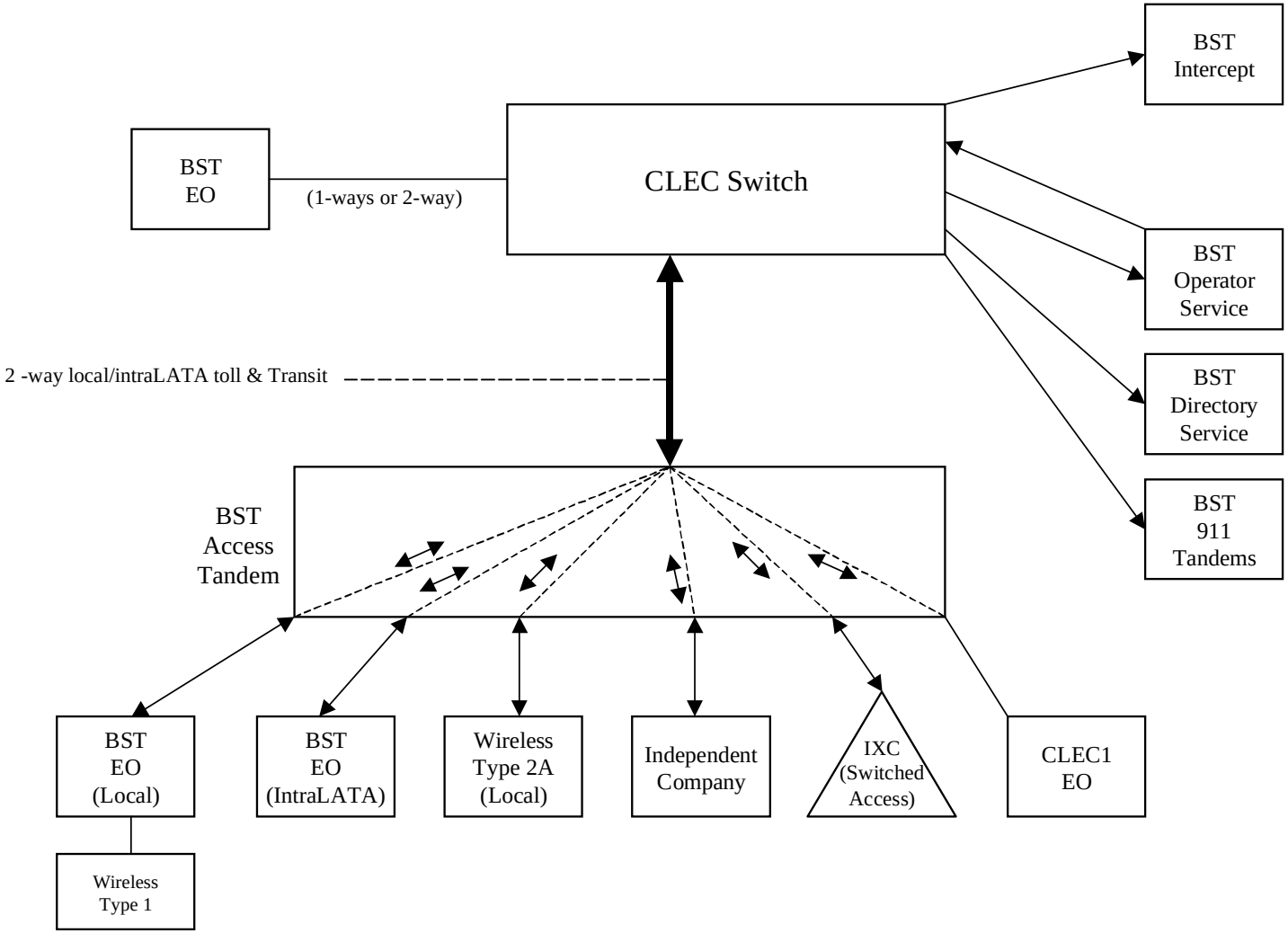

LOCAL INTERCONNECTION - Florida														Attachment: 3		Exhibit: A	
CATEGORY		RATE ELEMENTS	Interim	Zone	BCS	USOC	RATES($)					Svc Order Submitted Elec per LSR	Svc Order Submitted Manually per LSR	Incremental Charge - Manual Svc Order vs. Electronic-1st	Incremental Charge - Manual Svc Order vs. Electronic-Add'l	Incremental Charge - Manual Svc Order vs. Electronic-Disc 1st	Incremental Charge - Manual Svc Order vs. Electronic-Disc Add'l
							Rec	Nonrecurring		Nonrecurring Disconnect		OSS Rates($)					
								First	Add'l	First	Add'l	SOMEC	SOMAN	SOMAN	SOMAN	SOMAN	SOMAN
LOCAL INTERCONNECTION (CALL TRANSPORT AND TERMINATION)																	
	NOTE: "bk" beside a rate indicates that the Parties have agreed to bill and keep for that element pursuant to the terms and conditions in Attachment 3.																
	TANDEM SWITCHING																
		Tandem Switching Function Per MOU					0.0006019bk										
		Multiple Tandem Switching, per MOU (applies to intial tandem only)					0.0006019										
		Tandem Intermediary Charge, per MOU*					0.0025										
	* This charge is applicable only to transit traffic and is applied in addition to applicable switching and/or interconnection charges.																
	TRUNK CHARGE																
		Installation Trunk Side Service - per DS0			OHD	TPP6X		21.73	8.19								
		Installation Trunk Side Service - per DS0			OHD	TPP9X		21.73	8.19								
		Dedicated End Office Trunk Port Service-per DS0**			OHD	TDEOP	0.00										
		Dedicated End Office Trunk Port Service-per DS1**			OH1 OH1MS	TDE1P	0.00										
		Dedicated Tandem Trunk Port Service-per DS0**			OHD	TDWOP	0.00										
		Dedicated Tandem Trunk Port Service-per DS1**			OH1 OH1MS	TDW1P	0.00										
	** This rate element is recovered on a per MOU basis and is included in the End Office Switching and Tandem Switching, per MOU rate elements																
	COMMON TRANSPORT (Shared)																
		Common Transport - Per Mile, Per MOU					0.0000035bk										
		Common Transport - Facilities Termination Per MOU					0.0004372bk										
LOCAL INTERCONNECTION (DEDICATED TRANSPORT)																	
	INTEROFFICE CHANNEL - DEDICATED TRANSPORT																
		Interoffice Channel - Dedicated Transport - 2-Wire Voice Grade - Per Mile per month			OHM	1L5NF	0.0091										
		Interoffice Channel - Dedicated Transport- 2- Wire Voice Grade - Facility Termination per month			OHM	1L5NF	25.32	47.35	31.78	18.31	7.03						
		Interoffice Channel - Dedicated Transport - 56 kbps - per mile per month			OHM	1L5NK	0.0091										
		Interoffice Channel - Dedicated Transport - 56 kbps - Facility Termination per month			OHM	1L5NK	18.44	47.35	31.78	18.31	7.03						
		Interoffice Channel - Dedicated Transport - 64 kbps - per mile per month			OHM	1L5NK	0.0091										
		Interoffice Channel - Dedicated Transport - 64 kbps - Facility Termination per month			OHM	1L5NK	18.44	47.35	31.78	18.31	7.03						
		Interoffice Channel - Dedicated Channel - DS1 - Per Mile per month			OH1, OH1MS	1L5NL	0.1856										
		Interoffice Channel - Dedicated Tranport - DS1 - Facility Termination per month			OH1, OH1MS	1L5NL	88.44	105.54	98.47	21.47	19.05						
		Interoffice Channel - Dedicated Transport - DS3 - Per Mile per month			OH3, OH3MS	1L5NM	3.87										
		Interoffice Channel - Dedicated Transport - DS3 - Facility Termination per month			OH3, OH3MS	1L5NM	1,071.00	335.46	219.28	72.03	70.56						
	LOCAL CHANNEL - DEDICATED TRANSPORT																
		Local Channel - Dedicated - 2-Wire Voice Grade per month			OHM	TEFV2	19.66	265.84	46.97	37.63	4.00						
		Local Channel - Dedicated - 4-Wire Voice Grade per month			OHM	TEFV4	20.45	266.54	47.67	44.22	5.33						
		Local Channel - Dedicated - DS1 per month			OH1	TEFHG	36.49	216.65	183.54	24.30	16.95						
		Local Channel - Dedicated - DS3 Facility Termination per month			OH3	TEFHJ	531.91	556.37	343.01	139.13	96.84						
	LOCAL INTERCONNECTION MID-SPAN MEET																
		Local Channel - Dedicated - DS1 per month			OH1MS	TEFHG	0.00	0.00									
		Local Channel - Dedicated - DS3 per month			OH3MS	TEFHJ	0.00	0.00									
	MULTIPLEXERS																
		Channelization - DS1 to DS0 Channel System			OH1, OH1MS	SATN1	146.77	101.42	71.62	11.09	10.49						
		DS3 to DS1 Channel System per month			OH3, OH3MS	SATNS	211.19	199.28	118.64	40.34	39.07						
		DS3 Interface Unit (DS1 COCI) per month			OH1, OH1MS	SATCO	13.76	10.07	7.08								
	Notes: If no rate is identified in the contract, the rates, terms, and conditions for the specific service or function will be as set forth in applicable BellSouth tariff.																

LOCAL INTERCONNECTION - Georgia														Attachment: 3		Exhibit: A	
CATEGORY	RATE ELEMENTS	Interim	Zone	BCS	USOC	RATES($)					Svc Order Submitted Elec per LSR	Svc Order Submitted Manually per LSR	Incremental Charge - Manual Svc Order vs. Electronic-1st	Incremental Charge - Manual Svc Order vs. Electronic-Add'l	Incremental Charge - Manual Svc Order vs. Electronic-Disc 1st	Incremental Charge - Manual Svc Order vs. Electronic-Disc Add'l
						Rec	Nonrecurring		Nonrecurring Disconnect		OSS Rates($)					
							First	Add'l	First	Add'l	SOMEC	SOMAN	SOMAN	SOMAN	SOMAN	SOMAN
LOCAL INTERCONNECTION (CALL TRANSPORT AND TERMINATION)																
NOTE: "bk" beside a rate indicates that the Parties have agreed to bill and keep for that element pursuant to the terms and conditions in Attachment 3.																
TANDEM SWITCHING																
	Tandem Switching Function Per MOU					0.0004086bk										
	Multiple Tandem Switching, per MOU (applies to intial tandem only)					0.0004086										
	Tandem Intermediary Charge, per MOU*					0.0025										
*** This charge is applicable only to transit traffic and is applied in addition to applicable switching and/or interconnection charges.**																
TRUNK CHARGE																
	Installation Trunk Side Service - per DS0			OHD	TPP6X		21.53	8.11								
	Installation Trunk Side Service - per DS0			OHD	TPP9X		21.53	8.11								
	Dedicated End Office Trunk Port Service-per DS0**			OHD	TDEOP	0.00										
	Dedicated End Office Trunk Port Service-per DS1**			OH1 OH1MS	TDE1P	0.00										
	Dedicated Tandem Trunk Port Service-per DS0**			OHD	TDWOP	0.00										
	Dedicated Tandem Trunk Port Service-per DS1**			OH1 OH1MS	TDW1P	0.00										
**** This rate element is recovered on a per MOU basis and is included in the End Office Switching and Tandem Switching, per MOU rate elements**																
COMMON TRANSPORT (Shared)																
	Common Transport - Per Mile, Per MOU					0.0000027bk										
	Common Transport - Facilities Termination Per MOU					0.0001914bk										
LOCAL INTERCONNECTION (DEDICATED TRANSPORT)																
INTEROFFICE CHANNEL - DEDICATED TRANSPORT																
	Interoffice Channel - Dedicated Transport - 2-Wire Voice Grade - Per Mile per month			OHM	1L5NF	0.0057										
	Interoffice Channel - Dedicated Transport- 2- Wire Voice Grade - Facility Termination per month			OHM	1L5NF	12.87	48.455	19.48	16.575	4.995						
	Interoffice Channel - Dedicated Transport - 56 kbps - per mile per month			OHM	1L5NK	0.0057										
	Interoffice Channel - Dedicated Transport - 56 kbps - Facility Termination per month			OHM	1L5NK	7.83	48.455	19.48	16.575	4.995						
	Interoffice Channel - Dedicated Transport - 64 kbps - per mile per month			OHM	1L5NK	0.0057										
	Interoffice Channel - Dedicated Transport - 64 kbps - Facility Termination per month			OHM	1L5NK	7.83	48.455	19.48	16.575	4.995						
	Interoffice Channel - Dedicated Channel - DS1 - Per Mile per month			OH1, OH1MS	1L5NL	0.1154										
	Interoffice Channel - Dedicated Tranport - DS1 - Facility Termination per month			OH1, OH1MS	1L5NL	34.19	111.025	80.28	31.355	21.73						
	Interoffice Channel - Dedicated Transport - DS3 - Per Mile per month			OH3, OH3MS	1L5NM	2.53										
	Interoffice Channel - Dedicated Transport - DS3 - Facility Termination per month			OH3, OH3MS	1L5NM	342.02	320.47	86.32	66.77	52.81						
LOCAL CHANNEL - DEDICATED TRANSPORT																
	Local Channel - Dedicated - 2-Wire Voice Grade per month			OHM	TEFV2	7.74	121.065	53.295	46.395	13.365						
	Local Channel - Dedicated - 4-Wire Voice Grade per month			OHM	TEFV4	8.72	125.62	54.43	46.395	13.365						
	Local Channel - Dedicated - DS1 per month			OH1	TEFHG	18.47	149.46	111.195	40.355	26.115						
	Local Channel - Dedicated - DS3 Facility Termination per month			OH3	TEFHJ	147.01	445.01	145.18	112.905	75.88						
LOCAL INTERCONNECTION MID-SPAN MEET																
	Local Channel - Dedicated - DS1 per month			OH1MS	TEFHG	0.00	0.00									
	Local Channel - Dedicated - DS3 per month			OH3MS	TEFHJ	0.00	0.00									
MULTIPLEXERS																
	Channelization - DS1 to DS0 Channel System			OH1, OH1MS	SATN1	69.75	105.675	41.585	23.75	4.19						
	DS3 to DS1 Channel System per month			OH3, OH3MS	SATNS	121.90	224.475	71.83	40.005	31.065						
	DS3 Interface Unit (DS1 COCI) per month			OH1, OH1MS	SATCO	7.35	15.805	11.385	6.605	6.605						
Notes: If no rate is identified in the contract, the rates, terms, and conditions for the specific service or function will be as set forth in applicable BellSouth tariff.																

Attachment 4

Central Office Collocation

CENTRAL OFFICE COLLOCATION
TABLE OF CONTENTS

1. Scope of Attachment
- **1.1 BellSouth Premises**
- **1.2. Right to Occupy**
- **1.3. Space Allocation**
- **1.4. Transfer of Collocation Space**
- **1.5. Space Reclamation**
- **1.6. Use of Space**
- **1.7. Rates and Charges**
- **1.8. Due Dates**
- **1.9. Compliance**

2. Space Availability Report
- **2.1. Optional Space Availability Report**

3. Collocation Options
- **3.1. Cageless Collocation**
- **3.2. Caged Collocation**
- **3.3. Shared Caged Collocation**
- **3.4. Adjacent Collocation**
- **3.5. Direct Connect**
- **3.6. Co-Carrier Cross Connect**

4. Occupancy
- **4.1. Space Ready Notification**
- **4.2. Acceptance Walk Through**
- **4.3. Early Space Acceptance**
- **4.4. Termination of Occupancy**

5. Use of Collocation Space
- **5.1. Equipment Type**
- **5.2. Terminations**
- **5.3. Security Interest in Equipment**
- **5.4. No Marketing**
- **5.5. Equipment Identification**
- **5.6. Entrance Facilities**
- **5.7. Dual Entrance Facilities**
- **5.8. Shared Use**
- **5.9. Demarcation Point**
- **5.10. Equipment and Facilities**
- **5.11. BellSouth's Access to Collocation Space**

CENTRAL OFFICE COLLOCATION
TABLE OF CONTENTS (Cont'd.)

5.12. Customer's Access
5.13. Interference or Impairment
5.14. Personalty and Its Removal
5.15. Alterations
5.16. Janitorial Service

6. Ordering and Preparation of Collocation Space
6.1. Initial Application
6.2. Subsequent Application
6.3. Space Preferences
6.4. Space Availability Notification
6.5. Denial of Application
6.6. Petition for Waiver
6.7. Waiting List
6.8. Public Notification
6.9. Application Response
6.10. Application Modifications
6.11. Bona Fide Firm Order

7. Construction and Provisioning
7.1 Construction and Provisioning Intervals
7.2. Joint Planning
7.3. Permits
7.4. Circuit Facility Assignments
7.5. Use of BellSouth Certified Supplier
7.6 Alarms and Monitoring
7.7. Virtual to Physical Relocation
7.8 Virtual to Physical Conversion (In Place)
7.9. Cancellation
7.10. Licenses
7.11. Environmental Compliance

8. Rates and Charges
8.1. Rates
8.2. Application Fees
8.3. Recurring Charges
8.4. Non-Recurring Charges
8.5. Space Preparation
8.6. Floor Space
8.7 Power

CENTRAL OFFICE COLLOCATION
TABLE OF CONTENTS (Cont'd.)

8.8 Cable Installation
8.9 Cable Records
8.10 Security Escort
8.11 Other
9. Insurance

10. Mechanics Lien

11. Inspections

12. Security and Safety Requirements

13. Destruction of Collocation Space

14. Eminent Domain

15. Nonexclusivity

EXHIBIT A ENVIRONMENTAL AND SAFETY PRINCIPLES
EXHIBIT B RATES

BELLSOUTH

CENTRAL OFFICE COLLOCATION

1. Scope of Attachment

1.1 BellSouth Premises. The rates, terms, and conditions contained within this Attachment shall only apply when Neutral Tandem is physically collocated as a sole occupant or as a Host within a BellSouth Premises pursuant to this Attachment. BellSouth Premises, as defined in this Attachment, includes BellSouth Central Offices and Serving Wire Centers (hereinafter "BellSouth Premises"). This Attachment is applicable to BellSouth Premises owned or leased by BellSouth. If the BellSouth Premises occupied by BellSouth is leased by BellSouth from a third party or otherwise controlled by a third party, special considerations and/or intervals may apply in addition to the terms and conditions contained in this Attachment.

1.2 Right to Occupy. BellSouth shall offer to Neutral Tandem collocation on rates, terms, and conditions that are just, reasonable, non-discriminatory and consistent with the rules of the FCC. Subject to the rates, terms and conditions of this Attachment, where space is available and it is technically feasible, BellSouth will allow Neutral Tandem to occupy a certain area designated by BellSouth within a BellSouth Premises, or on BellSouth property upon which the BellSouth Premises is located, of a size which is specified by Neutral Tandem and agreed to by BellSouth (hereinafter "Collocation Space"). The necessary rates, terms and conditions for a premises as defined by the FCC, other than BellSouth Premises, shall be negotiated upon reasonable request for collocation at such premises.

1.2.1 Neither BellSouth nor any of BellSouth's affiliates may reserve space for future use on more preferential terms than those set forth in this Attachment.

1.2.1.1 In all states other than Florida, the size specified by Neutral Tandem may contemplate a request for space sufficient to accommodate Neutral Tandem's growth within a twenty-four (24) month period.

1.2.1.2 In the state of Florida, the size specified by Neutral Tandem may contemplate a request for space sufficient to accommodate Neutral Tandem's growth within an eighteen (18) month period.

1.3 Space Allocation. BellSouth shall assign Neutral Tandem Collocation Space that utilizes existing infrastructure (e.g., heating, ventilation, air conditioning (HVAC), lighting and available power), if such space is available for collocation. Otherwise, BellSouth shall attempt to accommodate Neutral Tandem's requested space preferences, if any, including the provision of contiguous space for any subsequent request for collocation. In allocating Collocation Space, BellSouth shall not materially

increase Neutral Tandem's cost or materially delay Neutral Tandem's occupation and use of the Collocation Space, assign Collocation Space that will impair the quality of service or otherwise limit the service Neutral Tandem wishes to offer, reduce unreasonably the total space available for physical collocation or preclude reasonable physical collocation within the BellSouth Premises. Space shall not be available for collocation if it is: (a) physically occupied by non-obsolete equipment; (b) assigned to another collocated telecommunications carrier; (c) used to provide physical access to occupied space; (d) used to enable technicians to work on equipment located within occupied space; (e) properly reserved for future use, either by BellSouth or another collocated telecommunications carrier; or (f) essential for the administration and proper functioning of the BellSouth Premises. BellSouth may segregate Collocation Space and require separate entrances for collocated telecommunications carriers to access their Collocation Space, pursuant to FCC Rules.

1.4 Transfer of Collocation Space. Neutral Tandem shall be allowed to transfer Collocation Space to another CLEC under the following conditions: (1) the central office is not at or near space exhaustion; (2) the transfer of space shall be contingent upon BellSouth's approval, which will not be unreasonably withheld; (3) Neutral Tandem has no unpaid, undisputed collocation charges; and (4) the transfer of the Collocation Space is in conjunction with Neutral Tandem's sale of all, or substantially all, of the in-place collocation equipment to the same CLEC.

1.4.1 The responsibilities of Neutral Tandem shall include: (1) submitting a letter of authorization to BellSouth for the transfer; (2) entering into a transfer agreement with BellSouth and the acquiring CLEC; and (3) returning all Security Access Devices to BellSouth. The responsibilities of the acquiring CLEC shall include: (1) submitting an application to BellSouth for the transfer of the Collocation Space; (2) satisfying all requirements of its interconnection agreement with BellSouth; (3) submitting a letter to BellSouth for the assumption of services; and (4) entering into a transfer agreement with BellSouth and Neutral Tandem.

1.4.2 In conjunction with a transfer of Collocation Space, any services associated with the Collocation Space shall be transferred pursuant to separately negotiated rates, terms and conditions.

1.5 Space Reclamation. In the event of space exhaust within a BellSouth Premises, BellSouth may include in its documentation for the Petition for Waiver filed with the Commission, any unutilized space in the BellSouth Premises. Neutral Tandem will be responsible for the justification of unutilized space within its Collocation Space, if the Commission requires such justification.

1.5.1 BellSouth may reclaim unused Collocation Space when a BellSouth central office is at, or near, space exhaustion and Neutral Tandem cannot demonstrate that Neutral Tandem will utilize the Collocation Space within a reasonable time. In the event of

space exhaust or near exhaust within a BellSouth Premises, BellSouth will provide written notice to Neutral Tandem requesting that Neutral Tandem release non-utilized Collocation Space to BellSouth, when 100 percent of the Collocation Space in Neutral Tandem's collocation arrangement is not being utilized.

Within twenty (20) days of receipt of written notification from BellSouth, Neutral Tandem shall either: (1) return the non-utilized Collocation Space to BellSouth, in which case Neutral Tandem shall be relieved of all obligations for charges associated with that portion of the Collocation Space applicable from the date the Collocation Space is returned to BellSouth; or (2) for all states, with the exception of Florida, provide BellSouth with information demonstrating that the Collocation Space will be utilized within twenty-four (24) months from the date Neutral Tandem accepted the Collocation Space (Acceptance Date) from BellSouth. For Florida, Neutral Tandem shall provide information to BellSouth demonstrating that the Collocation Space will be utilized within eighteen (18) months from the Acceptance Date.

Disputes concerning BellSouth's claim of central office space exhaust, or near exhaust, or Neutral Tandem's refusal to return requested Collocation Space should be resolved by BellSouth and Neutral Tandem pursuant to the Dispute Resolution language contained in this Agreement.

1.6 Use of Space. Neutral Tandem shall use the Collocation Space for the purpose of installing, maintaining and operating Neutral Tandem's equipment (which may include testing and monitoring equipment) necessary for interconnection with BellSouth's services/facilities or for accessing BellSouth's unbundled network elements for the provision of telecommunications services, as specifically set forth in this Agreement. The Collocation Space assigned to Neutral Tandem may not be used for any purposes other than as specifically described herein or in any amendment hereto.

1.7 Rates and Charges. Neutral Tandem agrees to pay the rates and charges identified in Exhibit B attached hereto.

1.8 Due Dates. If any due date contained in this Attachment falls on a weekend or a national holiday, then the due date will be the next business day thereafter. For intervals of ten (10) days or less, national holidays will be excluded. For purposes of this Attachment, national holidays include the following: New Year's Day, Martin Luther King, Jr. Day, President's Day (Washington's Birthday), Memorial Day, Independence Day, Labor Day, Columbus Day, Veteran's Day, Thanksgiving Day, and Christmas Day.

1.9 Compliance. Subject to Section 24 of the General Terms and Conditions of this Agreement, the Parties agree to comply with all applicable federal, state, county, local and administrative laws, rules, ordinances, regulations and codes in the performance of their obligations hereunder.

2. Optional Space Availability Report

2.1 Upon request from Neutral Tandem and at Neutral Tandem's expense, BellSouth will provide a written report (Space Availability Report) describing in detail the space that is currently available for collocation at a particular BellSouth Premises. This report will include the amount of Collocation Space available at the BellSouth Premises requested, the number of collocators present at the BellSouth Premises, any modifications in the use of the space since the last report on the BellSouth Premises requested and the measures BellSouth is taking to make additional space available for collocation arrangements. A Space Availability Report does not reserve space at the BellSouth Premises for which the Space Availability Report was requested by Neutral Tandem.

2.1.1 The request from Neutral Tandem for a Space Availability Report must be in writing and include the BellSouth Premises street address, as identified in the Local Exchange Routing Guide (LERG), and the Common Language Location Identification (CLLI) code for the BellSouth Premises requested. CLLI code information is located in the National Exchange Carrier Association (NECA) Tariff FCC No. 4.

2.1.2 BellSouth will respond to a request for a Space Availability Report for a particular BellSouth Premises within ten (10) days of the receipt of such request. BellSouth will make commercially reasonable efforts to respond in ten (10) days to a Space Availability Report request when the request includes from two (2) to five (5) BellSouth Premises within the same state. The response time for Space Availability Report requests of more than five (5) BellSouth Premises, whether the request is for the same state or for two or more states within the BellSouth Region, shall be negotiated between the Parties. If BellSouth cannot meet the ten (10) day response time, BellSouth shall notify Neutral Tandem and inform Neutral Tandem of the timeframe under which it can respond.

3. Collocation Options

3.1 Cageless Collocation. BellSouth shall allow Neutral Tandem to collocate Neutral Tandem's equipment and facilities without requiring the construction of a cage or similar structure. BellSouth shall allow Neutral Tandem to have direct access to Neutral Tandem's equipment and facilities in accordance with Section 5.12. BellSouth shall make cageless collocation available in single bay increments. Except where Neutral Tandem's equipment requires special technical considerations (e.g., special cable racking or isolated ground plane), BellSouth shall assign cageless Collocation Space in conventional equipment rack lineups where feasible. For equipment requiring special technical considerations, Neutral Tandem must provide the equipment layout, including spatial dimensions for such equipment pursuant to generic requirements contained in Telcordia GR-63-Core, and shall be responsible for compliance with all special technical requirements associated with such equipment.

3.2 Caged Collocation. BellSouth will make caged Collocation Space available in fifty (50) square foot increments. At Neutral Tandem's option and expense, Neutral Tandem will arrange with a Supplier certified by BellSouth (BellSouth Certified Supplier) to construct a collocation arrangement enclosure in accordance with BellSouth's specifications for a wire mesh enclosure prior to starting equipment installation. Where local building codes require enclosure specifications more stringent than BellSouth's wire mesh enclosure specifications, Neutral Tandem and Neutral Tandem's BellSouth Certified Supplier must comply with the more stringent local building code requirements. Neutral Tandem's BellSouth Certified Supplier shall be responsible for filing and obtaining any and all necessary permits and/or licenses for such construction. BellSouth or BellSouth's designated agent or contractor shall provide, at Neutral Tandem's expense, documentation, which may include existing building architectural drawings, enclosure drawings, specifications, etc., necessary for Neutral Tandem's BellSouth Certified Supplier to obtain all necessary permits and/or other licenses. Neutral Tandem's BellSouth Certified Supplier shall bill Neutral Tandem directly for all work performed for Neutral Tandem. BellSouth shall have no liability for, nor responsibility to pay, such charges imposed by Neutral Tandem's BellSouth Certified Supplier. Neutral Tandem must provide the local BellSouth Central Office Building Contact with two (2) Access Keys that will allow entry into the locked enclosure. Except in the case of an emergency, BellSouth will not access Neutral Tandem's locked enclosure prior to notifying Neutral Tandem at least forty-eight (48) hours or two (2) business days, whichever is greater, before access to Neutral Tandem's Collocation Space is required. Upon request, BellSouth shall construct the enclosure for Neutral Tandem.

3.2.1 In the event Neutral Tandem's BellSouth Certified Supplier will construct the collocation arrangement enclosure, BellSouth may elect to review Neutral Tandem's plans and specifications, prior to allowing the construction to start, to ensure compliance with BellSouth's wire mesh enclosure specifications. BellSouth will notify Neutral Tandem of its desire to conduct this review in BellSouth's Application Response, as defined herein, to Neutral Tandem's Initial Application. If Neutral Tandem's Initial Application does not indicate its desire to construct its own enclosure and Neutral Tandem subsequently decides to construct its own enclosure prior to BellSouth's Application Response, then Neutral Tandem will resubmit its Initial Application, indicating its desire to construct its own enclosure. If Neutral Tandem subsequently decides to construct its own enclosure after the bona fide firm order (hereinafter "BFFO") has been accepted by BellSouth, Neutral Tandem will submit a Subsequent Application, as defined in Section 6.2 of this Attachment. If BellSouth elects to review Neutral Tandem's plans and specifications, then BellSouth will provide notification to Neutral Tandem within ten (10) days after the Initial Application BFFO date or, if a Subsequent Application is submitted as set forth in the preceding sentence, then the Subsequent Application BFFO date. BellSouth shall complete its review within fifteen (15) days after BellSouth's receipt of Neutral

Tandem's plans and specifications. Regardless of whether or not BellSouth elects to review Neutral Tandem's plans and specifications, BellSouth reserves the right to inspect the enclosure after construction has been completed to ensure that it is constructed according to Neutral Tandem's submitted plans and specifications and/or BellSouth's wire mesh enclosure specifications, as applicable. If BellSouth decides to inspect the constructed Collocation Space, BellSouth will complete its inspection within fifteen (15) days after receipt of Neutral Tandem's written notification that the enclosure has been completed. Within seven (7) days after BellSouth has completed its inspection of Neutral Tandem's caged Collocation Space BellSouth shall require Neutral Tandem, at Neutral Tandem's expense, to remove or correct any structure that does not meet Neutral Tandem's plans and specifications or BellSouth's wire mesh enclosure specifications, as applicable.

3.3 Shared Caged Collocation. Neutral Tandem may allow other telecommunications carriers to share Neutral Tandem's caged Collocation Space, pursuant to the terms and conditions agreed to by Neutral Tandem (Host) and the other telecommunications carriers (Guests) contained in this Section, except where the BellSouth Premises is located within a leased space and BellSouth is prohibited by said lease from offering such an option to Neutral Tandem. BellSouth shall be notified in writing by Neutral Tandem upon the execution of any agreement between the Host and its Guest(s) prior to the submission of an application. Further, such notification shall include the name of the Guest(s), the term of the agreement, and a certification by Neutral Tandem that said agreement imposes upon the Guest(s) the same terms and conditions for Collocation Space as set forth in this Attachment between BellSouth and Neutral Tandem. The term of the agreement between the Host and its Guest(s) shall not exceed the term of this Agreement between BellSouth and Neutral Tandem.

3.3.1 Neutral Tandem, as the Host, shall be the sole interface and responsible Party to BellSouth for the assessment and billing of rates and charges contained within this Attachment and for the purposes of ensuring that the safety and security requirements of this Attachment are fully complied with by the Guest(s), its employees and agents. BellSouth shall provide Neutral Tandem with a pro-ration of the costs of the Collocation Space based on the number of collocators and the space used by each. There will be a minimum charge of one (1) bay/rack per Host/Guest. In addition to the above, for all states other than Florida, Neutral Tandem shall be the responsible Party to BellSouth for the purpose of submitting applications for initial and additional equipment placement for the Guest(s). In Florida, the Guest(s) may submit its own Initial Application and Subsequent Applications for equipment placement using the Host's Access Carrier Name Abbreviation (ACNA). A separate Guest application shall result in the assessment of an Initial Application Fee or a Subsequent Application Fee, as set forth in Exhibit B, which will be billed to the Host on the date that BellSouth provides its written Application Response to the Guest(s) Bona Fide application.

3.3.2 Notwithstanding the foregoing, the Guest(s) may submit service orders directly to BellSouth to request the provisioning of interconnecting facilities between BellSouth and the Guest(s), the provisioning of services, and/or access to Network Elements. The bill for these interconnecting facilities, services and Network Elements will be charged to the Guest(s) pursuant to the applicable BellSouth Tariff or the Guest's Interconnection Agreement with BellSouth.

3.3.3 Neutral Tandem shall indemnify and hold harmless BellSouth from any and all claims, actions, causes of action, of whatever kind or nature arising out of the presence of Neutral Tandem's Guest(s) in the Collocation Space, except to the extent caused by BellSouth's sole negligence, gross negligence, or willful misconduct.

3.4 Adjacent Collocation. Subject to technical feasibility and space availability, BellSouth will permit an adjacent collocation arrangement (Adjacent Arrangement) on BellSouth Premises' property only when space within the requested BellSouth Premises is legitimately exhausted and where the Adjacent Arrangement does not interfere with access to existing or planned structures or facilities on the BellSouth Premises' property. An Adjacent Arrangement shall be constructed or procured by Neutral Tandem or Neutral Tandem's BellSouth Certified Supplier and must be in conformance with the provisions of BellSouth's design and construction specifications. Further, Neutral Tandem shall construct, procure, maintain and operate said Adjacent Arrangement pursuant to all of the applicable rates, terms and conditions set forth in this Attachment.

3.4.1 If Neutral Tandem requests Adjacent Collocation, pursuant to the conditions stated in 3.4 above, Neutral Tandem must arrange with a BellSouth Certified Supplier to construct or procure the Adjacent Arrangement structure in accordance with BellSouth's specifications. BellSouth will provide the appropriate specifications upon request. Where local building codes require specifications more stringent than BellSouth's own specifications, Neutral Tandem and Neutral Tandem's BellSouth Certified Supplier shall comply with the more stringent local building code requirements. Neutral Tandem's BellSouth Certified Supplier shall be responsible for filing and obtaining any and all necessary zoning, permits and/or licenses for such construction. Neutral Tandem's BellSouth Certified Supplier shall bill Neutral Tandem directly for all work performed for Neutral Tandem to comply with this Attachment. BellSouth shall have no liability for, nor responsibility to pay, such charges imposed by Neutral Tandem's BellSouth Certified Supplier. Neutral Tandem must provide the local BellSouth Central Office Building Contact with two (2) cards, keys or other access devices used to gain entry into the locked enclosure. Except in the case of an emergency, BellSouth will not access Neutral Tandem's locked enclosure prior to notifying Neutral Tandem at least forty-eight (48) hours or two (2) business days, whichever is greater, before access to the Collocation Space is required.

3.4.2 Neutral Tandem must submit its Adjacent Arrangement construction plans and specifications to BellSouth when it places its Firm Order. BellSouth shall review Neutral Tandem's plans and specifications prior to the construction of an Adjacent Arrangement to ensure Neutral Tandem's compliance with BellSouth's specifications. BellSouth shall complete its review within fifteen (15) days after receipt of the plans and specifications from Neutral Tandem for the Adjacent Arrangement. BellSouth may inspect the Adjacent Arrangement during and after construction is completed to ensure that it is constructed according to Neutral Tandem's submitted plans and specifications. If BellSouth decides to inspect the completed Adjacent Arrangement, BellSouth will complete its inspection within fifteen (15) days after receipt of Neutral Tandem's written notification that the Adjacent Arrangement has been completed. Within seven (7) days after BellSouth has completed its inspection of Neutral Tandem's Adjacent Arrangement, BellSouth shall require Neutral Tandem, at Neutral Tandem's expense, to remove or correct any structure that does not meet its submitted plans and specifications or BellSouth's specifications, as applicable.

3.4.3 Neutral Tandem shall provide a concrete pad, the structure housing the Adjacent Arrangement, HVAC, lighting, and all of the facilities that are required to connect the structure (i.e., racking, conduits, etc.) to the BellSouth point of demarcation. At Neutral Tandem's option, and where the local authority having jurisdiction permits, BellSouth shall provide an AC power source and access to physical Collocation services and facilities, subject to the same nondiscriminatory requirements as those applicable to any other physical Collocation arrangement. In Alabama and Louisiana, at Neutral Tandem's request and expense, BellSouth will provide DC power to an Adjacent Collocation site where technically feasible, as that term has been defined by the FCC, and in accordance with applicable law. BellSouth will provide DC power in an Adjacent Arrangement provided that such provisioning can be done in compliance with the National Electric Code (NEC), all safety and building codes, and any local codes, such as, but not limited to, local zoning codes, and upon completion of negotiations between the Parties on the applicable rates and provisioning intervals. Neutral Tandem will pay for any and all DC power construction and provisioning costs to an Adjacent Arrangement through individual case basis (ICB) pricing that must be paid as follows: fifty percent (50%) before the DC installation work begins and fifty percent (50%) at completion of the DC installation work to the Adjacent Arrangement. Neutral Tandem's BellSouth Certified Supplier shall be responsible, at Neutral Tandem's sole expense, for filing the required documentation to obtain any and all necessary permits and/or licenses for an Adjacent Arrangement. BellSouth shall allow Shared Caged Collocation within an Adjacent Arrangement, pursuant to the terms and conditions set forth in Section 3.3 above.

3.5 Direct Connect. BellSouth will permit Neutral Tandem to directly interconnect between its own physical/virtual Collocation Spaces within the same BellSouth central office (Direct Connect). Neutral Tandem shall contract with a BellSouth Certified Supplier to place the Direct Connect, which shall be provisioned using facilities owned

by Neutral Tandem. A Direct Connect shall utilize BellSouth common cable support structure. There will be a recurring charge per linear foot, per cable, of the actual common cable support structure used by Neutral Tandem to provision the Direct Connect between its physical/virtual Collocation Spaces. In those instances where Neutral Tandem's physical/virtual Collocation Spaces are contiguous in the central office, Neutral Tandem will have the option of using Neutral Tandem's own technicians to deploy the Direct Connect using either electrical or optical facilities between its Collocation Spaces by constructing its own dedicated cable support structure. Neutral Tandem will deploy such electrical or optical connections directly between its own equipment without being routed through BellSouth's equipment or common cable support structure. Neutral Tandem may not self-provision a Direct Connect on any BellSouth distribution frame, POT (Point of Termination) Bay, DSX (Digital System Cross-Connect) panel or LGX (Light Guide Cross-Connect) panel. Neutral Tandem is solely responsible for ensuring the integrity of the signal.

3.5.1 To place an order for a Direct Connect, Neutral Tandem must submit an Initial Application or Subsequent Application to BellSouth. If no modification to the Collocation Space is requested other than the placement of a Direct Connect, the Co-Carrier Cross Connect/Direct Connect Application Fee for Direct Connect, as defined in Exhibit B, will apply. If other modifications are requested, in addition to the placement of a Direct Connect, either an Initial Application Fee or a Subsequent Application Fee will apply, pursuant to Section 6.2 of this Attachment. BellSouth will bill this nonrecurring charge on the date that BellSouth provides an Application Response to Neutral Tandem.

3.6 Co-Carrier Cross Connect. A Co-Carrier Cross Connect (CCXC) is a cross connection between Neutral Tandem and another collocated telecommunications carrier, other than BellSouth, in the same BellSouth Premises. Where technically feasible, BellSouth will permit Neutral Tandem to interconnect between its Collocation Space(s) and the physical/virtual collocation space(s) of another collocated telecommunications carrier(s) within the same BellSouth Premises via a CCXC, pursuant to the FCC's Rules. The other collocated telecommunications carrier's agreement must also contain CCXC rates, terms and conditions before BellSouth will permit the provisioning of a CCXC between the two collocated carriers. The applicable BellSouth charges will be assessed to Neutral Tandem upon Neutral Tandem's request for the CCXC. Neutral Tandem is prohibited from using the Collocation Space for the sole or primary purpose of cross-connecting to other collocated telecommunications carriers.

3.6.1 Neutral Tandem must contract with a BellSouth Certified Supplier to place the CCXC. The CCXC shall be provisioned using facilities owned by Neutral Tandem. Such cross-connections to other collocated telecommunications carriers may be made using either electrical or optical facilities. Neutral Tandem shall be responsible for providing a letter of authorization (LOA), with the application, to BellSouth from the other

collocated telecommunications carrier to which it will be cross-connecting. The CCXC shall utilize BellSouth common cable support structure. There will be a recurring charge per linear foot, per cable, of the common cable support structure used by Neutral Tandem to provision the CCXC to the other collocated telecommunications carrier. In those instances where Neutral Tandem's equipment and the equipment of the other collocated telecommunications carrier are located in contiguous caged Collocation Space, Neutral Tandem may use its own technicians to install the CCXC using either electrical or optical facilities between the equipment of both collocated telecommunications carriers by constructing a dedicated cable support structure between the two contiguous cages. Neutral Tandem shall deploy such electrical or optical cross-connections directly between its own equipment and the equipment of the other collocated telecommunications carrier without being routed through BellSouth's equipment or, in the case of a CCXC provisioned between contiguous collocation spaces, common cable support structure. Neutral Tandem shall not provision CCXC on any BellSouth distribution frame, POT Bay, DSX panel or LGX panel. Neutral Tandem is solely responsible for ensuring the integrity of the signal.

3.6.2 To place an order for a CCXC, Neutral Tandem must submit an application to BellSouth. If no modification to the Collocation Space is requested other than the placement of a CCXC, the Co-Carrier Cross Connect/Direct Connect Application Fee for a CCXC, as defined in Exhibit B, will apply. If other modifications are requested, in addition to the placement of a CCXC, either an Initial Application or a Subsequent Application Fee will apply, pursuant to Section 6.2 of this Attachment. BellSouth will bill this nonrecurring charge on the date that it provides an Application Response to Neutral Tandem.

4. Occupancy

4.1 Space Ready Notification. BellSouth will notify Neutral Tandem in writing when the Collocation Space is ready for occupancy (Space Ready Date).

4.2 Acceptance Walk Through. Neutral Tandem will schedule and complete an acceptance walkthrough of new or additional provisioned Collocation Space with BellSouth within fifteen (15) days after the Space Ready Date. BellSouth will correct any identified deviations from Neutral Tandem's original or jointly amended application within seven (7) days after the walkthrough, unless the Parties mutually agree upon a different time frame. BellSouth will then establish a new Space Ready Date. Another acceptance walkthrough will be scheduled and conducted within fifteen (15) days after the new Space Ready Date. This follow-up acceptance walkthrough will be limited to only those deviations identified in the initial walkthrough. If Neutral Tandem completes its acceptance walkthrough within the fifteen (15) day interval associated with the applicable Space Ready Date, billing will begin upon the date of Neutral Tandem's acceptance of the Collocation Space (Space Acceptance Date). In

the event Neutral Tandem fails to complete an acceptance walkthrough within the fifteen (15) day interval associated with the applicable Space Ready Date, the Collocation Space shall be deemed accepted by Neutral Tandem on the Space Ready Date and billing will commence from that date.

4.3 Early Space Acceptance. If Neutral Tandem decides to occupy the Collocation Space prior to the Space Ready Date, the date Neutral Tandem occupies the space is deemed the Space Acceptance Date and billing will begin from that date. Neutral Tandem must notify BellSouth in writing that its collocation equipment installation is complete. Neutral Tandem's collocation equipment installation is complete, which is when Neutral Tandem's equipment has been cross-connected to BellSouth's network for the purpose of provisioning telecommunication services to Neutral Tandem's customers. BellSouth may, at its discretion, refuse to accept any orders for cross-connects until it has received such notice from Neutral Tandem.

4.4 Termination of Occupancy. In addition to any other provisions addressing termination of occupancy in this Agreement, Neutral Tandem may terminate its occupancy of a particular Collocation Space by submitting a Subsequent Application requesting termination of occupancy for such Collocation Space. Such termination shall be effective upon BellSouth's acceptance of the Space Relinquishment Form. Billing for monthly recurring charges will cease on the date that Neutral Tandem and BellSouth conduct an inspection of the terminated space and jointly sign off on the Space Relinquishment Form or on the date that Neutral Tandem signs off on the Space Relinquishment Form and sends this form to BellSouth, provided no discrepancies are found during BellSouth's subsequent inspection of the terminated space. If the subsequent inspection by BellSouth reveals any discrepancies, billing will cease on the date that BellSouth and Neutral Tandem jointly conduct an inspection, confirming that Neutral Tandem has corrected all of the noted discrepancies identified by BellSouth. A Subsequent Application Fee will not apply for the termination of occupancy; however, specific disconnect fees may apply to the services terminating to such Collocation Space. The particular disconnect fees that would apply in each state are contained in Exhibit B of this Attachment. BellSouth may terminate Neutral Tandem's right to occupy Collocation Space in the event Neutral Tandem fails to comply with any provision of this Agreement, including payment of the applicable fees contained in Exhibit B of this Attachment, for such Collocation Space.

4.4.1 Upon termination of occupancy, Neutral Tandem, at its sole expense, shall remove its equipment and any other property owned, leased or controlled by Neutral Tandem from the Collocation Space. Neutral Tandem shall have thirty (30) days from the BFFO date ("Termination Date") to complete such removal, including the removal of all equipment and facilities of Neutral Tandem's Guest(s), unless Neutral Tandem's Guest(s) has assumed responsibility for the Collocation Space housing the Guest(s)'s equipment and executed the appropriate documentation required by BellSouth to

transfer the Collocation Space to the Guest(s) prior to Neutral Tandem's Termination Date.

4.4.2 Neutral Tandem shall continue the payment of all monthly recurring charges to BellSouth until the date Neutral Tandem, and if applicable Neutral Tandem's Guest(s), has fully vacated the Collocation Space and the Space Relinquishment Form has been accepted by BellSouth. If Neutral Tandem or Neutral Tandem's Guest(s) fails to vacate the Collocation Space within thirty (30) days from the Termination Date BellSouth shall have the right to remove and dispose of the equipment and any other property of Neutral Tandem or Neutral Tandem's Guest(s), in any manner that BellSouth deems fit, at Neutral Tandem's expense and with no liability whatsoever for Neutral Tandem's property or Neutral Tandem's Guest(s)'s property.

4.4.3 Upon termination of Neutral Tandem's right to occupy specific Collocation Space, the Collocation Space will revert back to BellSouth's central office space inventory. Neutral Tandem shall surrender the Collocation Space to BellSouth in the same condition as when it was first occupied by Neutral Tandem, with the exception of ordinary wear and tear, unless otherwise agreed to by the Parties. Neutral Tandem's BellSouth Certified Supplier shall be responsible for updating and making any necessary changes to BellSouth's records as required by BellSouth specifications including, but not limited to, BellSouth's Central Office Record Drawings and ERMA Records. Neutral Tandem shall be responsible for the cost of removing any Neutral Tandem constructed enclosure, as well as any supporting structures (e.g., racking, conduits, power cables, etc.), by the Termination Date and restoring the grounds to their original condition.

5. Use of Collocation Space

5.1 Equipment Type. BellSouth shall permit the collocation and use of any equipment necessary for interconnection to BellSouth's network and/or access to BellSouth's unbundled network elements in the provision of telecommunications services, as the term "necessary" is defined by FCC 47 C.F.R. Section 51.323 (b). The primary purpose and function of any equipment collocated in a BellSouth Premises must be for interconnection to BellSouth's network or access to BellSouth's unbundled network elements in the provision of telecommunications services. Equipment is necessary for interconnection if an inability to deploy that equipment would, as a practical, economical, or operational matter, preclude the requesting carrier from obtaining interconnection with BellSouth at a level equal in quality to that which BellSouth obtains within its own network or what BellSouth provides to any affiliate, subsidiary, or other party.

5.1.2 Examples of equipment that would not be considered necessary include, but are not limited to: traditional circuit switching equipment, equipment used exclusively for call-related databases, computer servers used exclusively for providing information

services, operations support system (OSS) equipment used to support collocated telecommunications carrier network operations, equipment that generates customer orders, manages trouble tickets or inventory, or stores customer records in centralized databases, etc. BellSouth will determine upon receipt of an application if the requested equipment is necessary based on the criteria established by the FCC. Multifunctional equipment placed on a BellSouth Premises must not place any greater relative burden on BellSouth's property than comparable single-function equipment. BellSouth reserves the right to allow the collocation of any equipment on a nondiscriminatory basis.

5.1.3 Such equipment must, at a minimum, meet the following Telcordia Network Equipment Building Systems (NEBS) General Equipment Requirements: Criteria Level 1 requirements as outlined in Telcordia Special Report SR-3580, Issue 1. Except where otherwise required by a Commission, BellSouth shall comply with the applicable FCC rules relating to denial of collocation equipment based on Neutral Tandem's failure to comply with this Section.

5.2 Terminations. Neutral Tandem shall not request more DS0, DS1, DS3 and/or optical terminations for a collocation arrangement than the total port or termination capacity of the equipment physically installed in the Collocation Space. The total capacity of the equipment collocated in the Collocation Space will include equipment contained in an application, as well as any equipment already placed in the Collocation Space. If full network termination capacity of the equipment being installed is not requested in the application submitted by Neutral Tandem, additional network terminations for the installed equipment will require the submission of a Subsequent Application. In the event Neutral Tandem submits an application for terminations that will exceed the total capacity of the collocated equipment, Neutral Tandem will be informed of the discrepancy by BellSouth and required to submit a revision to the application.

5.3 Security Interest in Equipment. Commencing with the most current calendar quarter after the effective date of this Attachment, and thereafter with respect to each subsequent calendar quarter during the term of this Agreement, Neutral Tandem will, no later than thirty (30) days after the close of such calendar quarter, provide a report to ICS Collocation Product Management, Room 34A55, 675 W. Peachtree Street, Atlanta, Georgia 30375, listing any equipment in the Collocation Space (i) that was added during the calendar quarter to which such report pertains, and (ii) for which there is a UCC-1 lien holder or another entity that has a secured financial interest in such equipment (Secured Equipment). If no Secured Equipment has been installed within a given calendar quarter, no report shall be due hereunder in connection with such calendar quarter.

5.4 No Marketing. Neutral Tandem shall not use the Collocation Space for marketing purposes, nor shall it place any identifying signs or markings outside the Collocation Space or on the grounds of the BellSouth Premises.

5.5 Equipment Identification. Neutral Tandem shall place a plaque or affix other identification (e.g., stenciling or labeling) to each piece of Neutral Tandem's equipment, including the appropriate emergency contacts with their corresponding telephone numbers, in order for BellSouth to properly identify Neutral Tandem's equipment in the case of an emergency. For caged Collocation Space, such identification must be placed on a plaque affixed to the outside of the caged enclosure.

5.6 Entrance Facilities. Neutral Tandem may elect to place Neutral Tandem-owned or Neutral Tandem leased fiber entrance facilities into its Collocation Space. BellSouth will designate the point of interconnection in close proximity to the BellSouth Premises housing the Collocation Space, such as at an entrance manhole or a cable vault, which are physically accessible by both Parties. Neutral Tandem will provide and place fiber cable in the entrance manhole of sufficient length to be pulled through conduit and into the splice location. Neutral Tandem will provide and install a sufficient length of fire retardant riser cable, to which BellSouth will splice the entrance cable. The fire retardant riser cable will extend from the splice location to Neutral Tandem's equipment in Neutral Tandem's Collocation Space. In the event Neutral Tandem utilizes a non-metallic, riser-type entrance facility, a splice will not be required. Neutral Tandem must contact BellSouth for authorization and instruction prior to placing any entrance facility cable in an entrance manhole or cable vault. Neutral Tandem is responsible for the maintenance of the entrance facilities.

5.6.1 Microwave Transmission Facilities. At Neutral Tandem's request, BellSouth will accommodate, where technically feasible and space is available, a microwave entrance facility, pursuant to separately negotiated rates, terms and conditions.

5.6.2 Copper and Coaxial Cable Entrance Facilities. In Florida, Georgia and Tennessee, BellSouth shall permit Neutral Tandem to use copper or coaxial cable entrance facilities, if approved by the Commission, but only in those rare instances where Neutral Tandemdemonstrates a necessity and entrance capacity is not at or near exhaust in a particular BellSouth Premises in which Neutral Tandem's Collocation Space is located. Notwithstanding the foregoing, in the case of adjacent collocation, copper facilities may be used between the adjacent collocation arrangement and the central office demarcation point, unless BellSouth determines that limited space is available for the placement of these entrance facilities.

5.7 Dual Entrance Facilities. BellSouth will provide at least two interconnection points at each BellSouth Premises where at least two such interconnection points are available and capacity exists. Upon receipt of a request by Neutral Tandem for dual entrance facilities to its physical Collocation Space, BellSouth shall provide Neutral Tandem with information regarding BellSouth's capacity to accommodate the requested dual entrance facilities. If conduit in the serving manhole(s) is available and is not reserved for another purpose or for utilization within twelve (12) months of the receipt of an

application for collocation, BellSouth will make the requested conduit space available for the installation of a second entrance facility to Neutral Tandem's Collocation Space. The location of the serving manhole(s) will be determined at the sole discretion of BellSouth. Where dual entrance facilities are not available due to a lack of capacity, BellSouth will provide this information to Neutral Tandem in the Application Response.

5.8 Shared Use. Neutral Tandem may utilize spare capacity on an existing telecommunications carrier's entrance facility for the purpose of obtaining an entrance facility to Neutral Tandem's Collocation Space within the same BellSouth Premises.

5.8.1 BellSouth shall allow the splice, as long as the fiber is non-working dark fiber. Neutral Tandem must arrange with BellSouth in accordance with BellSouth's Special Construction Procedures, RL93-11-030BT, and provide a LOA from the other telecommunications carrier authorizing BellSouth to perform the splice of the Neutral Tandem-provided riser cable to the spare capacity on the other telecommunications carrier's entrance facility. If Neutral Tandem desires to allow another telecommunications carrier to use its entrance facilities, the telecommunications carrier must arrange with BellSouth in accordance with BellSouth's Special Construction Procedures, RL93-11-030BT, and provide a LOA from Neutral Tandem authorizing BellSouth to perform the splice of the telecommunications carrier's provided riser cable to the spare capacity on Neutral Tandem's entrance facility.

5.9 Demarcation Point. BellSouth will designate the point(s) of demarcation between Neutral Tandem's equipment and/or network facilities and BellSouth's network facilities. Each Party will be responsible for the maintenance and operation of all equipment/facilities on its side of the demarcation point. Neutral Tandem shall be responsible for providing the necessary cabling and Neutral Tandem's BellSouth Certified Supplier shall be responsible for installing and properly labeling/stenciling the common block and any necessary cabling identified in Section 7 of this Attachment. Neutral Tandem or its agent must perform all required maintenance to the equipment/facilities on its side of the demarcation point, pursuant to Section 5.10, following, and may self-provision cross-connects that may be required within its own Collocation Space to activate service requests.

5.9.1 In Tennessee, BellSouth will designate the point(s) of demarcation between Neutral Tandem's equipment and/or network facilities and BellSouth's network facilities. Each Party will be responsible for the maintenance and operation of all equipment/facilities on its side of the demarcation point. For connections to BellSouth's network, Neutral Tandemmay request that the demarcation point be a Point of Termination (POT) bay in a common area within the BellSouth Premises, which Neutral Tandem shall be responsible for providing and Neutral Tandem's BellSouth Certified Supplier shall be responsible for installing and properly labeling/stenciling. Neutral Tandem's BellSouth Certified Supplier shall also be

responsible for installing the necessary cabling between Neutral Tandem's Collocation Space and the POT bay. Neutral Tandem, its agent, or Neutral Tandem's BellSouth Certified Supplier must perform all required maintenance to the equipment/network facilities on its side of the demarcation point and may self-provision cross-connects that it requires within its own Collocation Space to activate service requests. If Neutral Tandem desires to avoid the use of a POT bay or any other intermediary device as contemplated by the Tennessee Regulatory Authority, BellSouth shall negotiate alternative rates, terms and conditions for such requested demarcation point.

5.10 Equipment and Facilities. Neutral Tandem, or if required by this Attachment, Neutral Tandem's BellSouth Certified Supplier, is solely responsible for the design, engineering, installation, testing, provisioning, performance, monitoring, and maintenance/repair of the equipment and network facilities used by Neutral Tandem, which must be performed in compliance with all applicable BellSouth specifications. Such equipment and network facilities may include, but are not limited to, cable(s), equipment, and point of termination connections. Neutral Tandem and its designated BellSouth Certified Supplier must follow and comply with all BellSouth specifications outlined in the following BellSouth Technical Requirements: TR 73503, TR 73519, TR 73572, and TR 73564.

5.11 BellSouth's Access to Collocation Space. From time to time, BellSouth may require access to Neutral Tandem's Collocation Space. BellSouth retains the right to access Neutral Tandem's Collocation Space for the purpose of making BellSouth equipment and building modifications (e.g., installing, altering or removing racking, ducts, electrical wiring, HVAC, and cabling). In such cases, BellSouth will give notice to Neutral Tandem at least forty-eight (48) hours before access to Neutral Tandem's Collocation Space is required. Neutral Tandem may elect to be present whenever BellSouth performs work in the Neutral Tandem's Collocation Space. The Parties agree that Neutral Tandem will not bear any of the expense associated with this type of work.

5.11.1 In the case of an emergency, BellSouth will provide oral notice of entry as soon as possible and, upon request, will provide subsequent written notice.

5.11.2 Neutral Tandem must provide the local BellSouth Central Office Building Contact with two (2) Access Devices that will allow BellSouth entry into any enclosed and locked Collocation Space including, but not limited to, an Adjacent Arrangement, pursuant to the requirements contained in this Section.

5.12 Neutral Tandem's Access. Pursuant to Section 12, Neutral Tandem shall have access to its Collocation Space twenty-four (24) hours a day, seven (7) days a week. Neutral Tandem agrees to provide the name and social security number, date of birth, or driver's license number of each employee, supplier, or agent of Neutral Tandem or Neutral Tandem's Guest(s) with Neutral Tandem's written request for access keys or

cards (Access Devices) for specific BellSouth Premises, prior to the issuance of said Access Devices, using Form RF-2906-C, the "CLEC and CLEC Certified Supplier Access Request and Acknowledgement" form. The appropriate key acknowledgement forms (the "Collocation Acknowledgement Sheet" for access cards and the "Key Acknowledgement Form" for keys) must be signed by Neutral Tandem and returned to BellSouth Access Management within fifteen (15) days of Neutral Tandem's receipt of these forms. Failure to return these properly acknowledged forms will result in the subsequent access key or card requests being held by BellSouth until the proper acknowledgement documents have been received by BellSouth and reflect current information. Access Devices may not be duplicated under any circumstances. Neutral Tandem agrees to be responsible for all Access Devices and for the return of all Access Devices in the possession of Neutral Tandem's employees, suppliers, agents, or Guests after termination of the employment relationship, the contractual obligation with Neutral Tandem ends, upon the termination of this Agreement, or upon the termination of occupancy of Collocation Space in a specific BellSouth Premises. Neutral Tandem shall pay all applicable charges associated with lost or stolen Access Devices.

5.12.1 BellSouth will permit one (1) accompanied site visit, which will be limited to no more than one hour, to Neutral Tandem's designated Collocation Space, after receipt of the BFFO, without charge to Neutral Tandem. Neutral Tandem must submit to BellSouth the completed Access Control Request Form for all employees, suppliers, agents or Guests requiring access to a BellSouth Premises at least thirty (30) days prior to the date Neutral Tandem desires to gain access to the Collocation Space. In order to permit reasonable access during construction of the Collocation Space, Neutral Tandem may submit a request for its one (1) free accompanied site visit to its designated Collocation Space at any time subsequent to BellSouth's receipt of the BFFO. In the event Neutral Tandem desires access to its designated Collocation Space after the first accompanied free visit and Neutral Tandem's access request form(s) has not been approved by BellSouth or Neutral Tandem has not yet submitted an access request form to BellSouth, Neutral Tandem shall be permitted to access the Collocation Space accompanied by a BellSouth security escort, at Neutral Tandem's expense, which will be assessed pursuant to the Security Escort fees contained in Exhibit B. Neutral Tandem must request that escorted access be provided by BellSouth to Neutral Tandem's designated Collocation Space at least three (3) business days prior to the date such access is desired. A BellSouth security escort will be required whenever Neutral Tandem or its approved agent or supplier requires access to the entrance manhole.

5.12.2 Lost or Stolen Access Devices. Neutral Tandem shall immediately notify BellSouth in writing when any of its Access Devices have been lost or stolen. If it becomes necessary for BellSouth to re-key buildings or deactivate an Access Device as a result of a lost or stolen Access Device(s) or for failure of Neutral Tandem's employees,

suppliers, agents or Guest(s) to return an Access Device(s), Neutral Tandem shall pay for the costs of re-keying the building or deactivating the Access Device(s).

5.13 Interference or Impairment. Notwithstanding any other provisions of this Attachment, Neutral Tandem shall not use any product or service provided under this Agreement, any other service related thereto or used in combination therewith, or place or use any equipment or facilities in any manner that 1) significantly degrades, interferes with or impairs service provided by BellSouth or any other entity or any person's use of its telecommunications services; 2) endangers or damages the equipment, facilities or any other property of BellSouth or any other entity or person; 3) compromises the privacy of any communications routed through the BellSouth Premises; or 4) creates an unreasonable risk of injury or death to any individual or to the public. If BellSouth reasonably determines that any equipment or facilities of Neutral Tandem violates the provisions of this paragraph, BellSouth shall provide written notice to Neutral Tandem, which shall direct Neutral Tandem to cure the violation within forty-eight (48) hours of Neutral Tandem's receipt of written notice or, if such cure is not feasible, at a minimum, to commence curative measures within twenty-four (24) hours and exercise reasonable diligence to complete such measures as soon as possible thereafter. After receipt of the notice, the Parties agree to consult immediately and, if necessary, to conduct an inspection of the Collocation Space.

5.13.1 Except in the case of the deployment of an advanced service which significantly degrades the performance of other advanced services or traditional voice band services, if Neutral Tandem fails to cure the violation within forty-eight (48) hours or, if such cure is not possible, to commence curative action within twenty-four (24) hours and exercise reasonable diligence to complete such action as soon as possible, or if the violation is of a character that poses an immediate and substantial threat of damage to property or injury or death to any person, or any other significant degradation, interference or impairment of BellSouth's or another entity's service, then and only in that event, BellSouth may take such action as it deems necessary to eliminate such threat including, without limitation, the interruption of electrical power to Neutral Tandem's equipment and/or facilities. BellSouth will endeavor, but is not required, to provide notice to Neutral Tandem prior to the taking of such action and BellSouth shall have no liability to Neutral Tandem for any damages arising from such action, except to the extent that such action by BellSouth constitutes willful misconduct.

5.13.2 For purposes of this Section, the term "significantly degrades" shall be defined as an action that noticeably impairs a service from a user's perspective. In the case of the deployment of an advanced service which significantly degrades the performance of other advanced services or traditional voice band services and Neutral Tandem fails to cure the violation within forty-eight (48) hours, or if such cure is not possible, to commence curative action within twenty-four (24) hours and exercise reasonable diligence to complete such action as soon as possible, BellSouth will establish before

the appropriate Commission that the technology deployed is causing the significant degradation. Any claims of network harm presented to Neutral Tandem or, if subsequently necessary, the Commission must be provided by BellSouth with specific and verifiable information. When BellSouth demonstrates that a certain technology deployed by Neutral Tandem is significantly degrading the performance of other advanced services or traditional voice band services, Neutral Tandem shall discontinue deployment of that technology and migrate its customers to other technologies that will not significantly degrade the performance of such services. Where the only degraded service itself is a known disturber, and the newly deployed technology satisfies at least one of the criteria for a presumption that it is acceptable for deployment, pursuant to 47 C.F.R. §51.230, the degraded service shall not prevail against the newly-deployed technology.

5.14 Personalty and Its Removal. Facilities and equipment placed by Neutral Tandem in the Collocation Space shall not become a part of the Collocation Space, even if nailed, screwed or otherwise fastened to the Collocation Space, but shall retain their status as personal property and may be removed by Neutral Tandem at any time. Any damage caused to the Collocation Space by Neutral Tandem's employees, suppliers, agents, or Guests during the installation or removal of such property shall be promptly repaired by Neutral Tandem at its sole expense. If Neutral Tandem decides to remove equipment and/or facilities from its Collocation Space and the removal requires no physical work be performed by BellSouth and Neutral Tandem's physical work includes, but is not limited to, power reduction, cross-connects, or tie pairs, BellSouth will bill Neutral Tandem the Administrative Only Application Fee associated with the type of removal activity performed by Neutral Tandem, as set forth in Exhibit B. This non-recurring fee will be billed on the date that BellSouth provides an Application Response to Neutral Tandem.

5.15 Alterations. Under no condition shall Neutral Tandem or any person acting on behalf of Neutral Tandem make any rearrangement, modification, augment, improvement, addition, and/or other alteration which could affect in any way space, power, HVAC, and/or safety considerations to the Collocation Space or the BellSouth Premises, hereinafter referred to individually or collectively as "Alterations", without the express written consent of BellSouth, which shall not be unreasonably withheld. The cost of any such Alteration shall be paid by Neutral Tandem. An Alteration shall require the submission of a Subsequent Application and will result in the assessment of the applicable application fee associated with the type of alteration requested, as set forth in Sections 6.2.1, and 7.1.4, which will be billed by BellSouth on the date that BellSouth provides Neutral Tandem with an Application Response.

5.16 Janitorial Service. Neutral Tandem shall be responsible for the general upkeep of its Collocation Space. Neutral Tandem shall arrange directly with a BellSouth Certified Supplier for janitorial services applicable to caged Collocation Space. Upon request, BellSouth shall provide a list of such suppliers on a BellSouth Premises-specific basis.

6. Ordering and Preparation of Collocation Space

6.1 Initial Application. For Neutral Tandem's or Neutral Tandem's Guest's(s') initial equipment placement, Neutral Tandem shall input a physical Expanded Interconnection Application Document (Initial Application) for physical Collocation Space directly into BellSouth's electronic application (e.App) system for processing. The Initial Application is considered Bona Fide when it is complete and accurate, meaning that all of the required fields on the Initial Application are completed with the appropriate type of information. An Initial Application Fee, as set forth in Exhibit B, will apply to each Initial Application submitted by Neutral Tandem and will be billed by BellSouth on the date BellSouth provides Neutral Tandem with an Application Response.

6.2 Subsequent Application. In the event Neutral Tandem or Neutral Tandem's Guest(s) desires to modify its use of the Collocation Space after a BFFO, Neutral Tandem shall complete an application that contains all of the detailed information associated with a requested Alteration of the Collocation Space, as defined in Section 5.15 of this Attachment (Subsequent Application). The Subsequent Application will be considered Bona Fide when it is complete and accurate, meaning that all of the required fields on the Subsequent Application have been completed with the appropriate type of information associated with the requested Alteration. BellSouth shall determine what modifications, if any, to the BellSouth Premises are required to accommodate the change(s) requested by Neutral Tandem in the Subsequent Application. Such modifications to the BellSouth Premises may include, but are not limited to, floor loading changes, changes necessary to meet HVAC requirements, changes to power plant requirements, equipment additions, etc.

6.2.1 Subsequent Application Fees. The application fee paid by Neutral Tandem for an Alteration shall be dependent upon the level of assessment needed to complete the Alteration requested. Where the Subsequent Application does not require provisioning or construction work, but requires BellSouth to perform an administrative activity, an Administrative Only Application Fee shall apply as set forth in Exhibit B. The Administrative Only Application Fee will apply to Subsequent Applications associated with a transfer of ownership of the Collocation Space, removal of equipment from the Collocation Space (where the removal requires no physical work to be performed by BellSouth), an Alteration made to a Bona Fide application by Neutral TandemNeutral Tandemcustomer_short_name> prior to BellSouth's receipt of the BFFO, and a virtual-to-physical conversion (in place). The Co-Carrier Cross Connect/Direct Connect Application Fee will apply when Neutral TandemNeutral Tandemcustomer_short_name> submits a Subsequent Application for a direct connection between its own physical and virtual Collocation Space(s) in the same BellSouth Premises or between its physical or virtual Collocation Space and that of another collocated telecommunications carrier within the same BellSouth Premises. The Power Reconfiguration Only Application Fee will apply when Neutral Tandem submits a Subsequent Application that reflects only an upgrade or reduction in the

amount of power that BellSouth is currently providing to Neutral Tandem's physical Collocation Space. The fee for a Subsequent Application, for which the Alteration requested has limited effect (e.g., requires limited assessment and sufficient cable support structure, HVAC, power and terminations are available), shall be the Subsequent Application Fee, as set forth in Exhibit B. The appropriate nonrecurring application fee will be billed on the date that BellSouth provides Neutral Tandem with an Application Response.

6.3 Space Preferences. If Neutral Tandem has previously requested and received a Space Availability Report for the BellSouth Premises, Neutral Tandem may submit up to three (3) space preferences on its application by identifying the specific space identification numbers referenced on the Space Availability Report for the space it is requesting. In the event BellSouth cannot accommodate Neutral Tandem's space preference(s), Neutral Tandem may accept the space allocated by BellSouth or cancel its application and submit another application requesting additional space preferences for the same BellSouth Premises. This application will be treated as a new application and the appropriate application fee will apply. The application fee will be billed by BellSouth on the date that BellSouth provides Neutral Tandem with an Application Response.

6.4 Space Availability Notification.

For all states except Florida and Tennessee, BellSouth will respond to an application within ten (10) days as to whether space is available or not available within the requested BellSouth Premises. In Florida and Tennessee, BellSouth will respond to an application within fifteen (15) days as to whether space is available or not available within a BellSouth Premises. BellSouth's e.App system will reflect when Neutral Tandem's application is Bona Fide. If the application cannot be Bona Fide, BellSouth will identify what revisions are necessary for the application to become Bona Fide.

6.4.1 If the amount of space requested is not available, BellSouth will notify Neutral Tandem of the amount of space that is available and no application fee will apply. When BellSouth's response includes an amount of space less than that requested by Neutral Tandem or space that is configured differently, no application fee will apply. If Neutral Tandem decides to accept the available space, Neutral Tandem must resubmit its application to reflect the actual space available, including the configuration of the space, prior to submitting a BFFO. When Neutral Tandem resubmits its application to accept the available space, BellSouth will bill Neutral Tandem the appropriate application fee.

6.5 Denial of Application. If BellSouth notifies Neutral Tandem that no space is available (Denial of Application), BellSouth will not assess an application fee to Neutral Tandem. After notifying Neutral Tandem that BellSouth has no available space in the requested BellSouth Premises, BellSouth will allow Neutral Tandem, upon request, to tour the entire BellSouth Premises within ten (10) days of such Denial of Application.

In order to schedule this tour, BellSouth must receive the request for the tour of the BellSouth Premises within five (5) days of the Denial of Application.

6.6 Petition for Waiver. Upon Denial of Application, BellSouth will timely file a petition with the appropriate Commission pursuant to 47 U.S.C. § 251(c)(6). BellSouth shall provide to the Commission any information requested by that Commission. Such information shall include which space, if any, BellSouth or any of BellSouth's affiliates have reserved for future use and a detailed description of the specific future uses for which the space has been reserved. Subject to an appropriate nondisclosure agreement or provision, BellSouth shall permit Neutral Tandem to inspect any floor plans or diagrams that BellSouth provides to the Commission.

6.7 Waiting List. On a first-come, first-served basis, which is governed by the date of receipt of an application or Letter of Intent, BellSouth will maintain a waiting list of requesting telecommunications carriers that have either received a Denial of Application or, where it is publicly known that a BellSouth Premises is out of space, have submitted a Letter of Intent to collocate in that BellSouth Premises. BellSouth will notify each telecommunications carrier on the waiting list that can be accommodated by the amount of space that becomes available, according to the position of the telecommunications carrier on said waiting list.

6.7.1 In Florida, on a first-come, first-served basis, which is governed by the date of receipt of an application or Letter of Intent, BellSouth will maintain a waiting list of requesting telecommunications carriers that have either received a Denial of Application or, where it is publicly known that a BellSouth Premises is out of space, have submitted a Letter of Intent to collocate in that BellSouth Premises. Sixty (60) days prior to space becoming available, if known, BellSouth will notify the Commission and the telecommunications carriers on the waiting list by mail when space will become available. If BellSouth does not know sixty (60) days in advance of when space will become available, BellSouth will notify the Commission and the telecommunications carriers on the waiting list within two (2) business days of the determination that space will become available. A telecommunications carrier that, upon denial of physical Collocation Space, requests virtual Collocation Space shall automatically be placed on the waiting list for physical Collocation Space that may become available in the future.

6.7.2 When physical Collocation Space becomes available, Neutral Tandem must submit an updated, complete, and accurate application to BellSouth within thirty (30) days of notification by BellSouth that physical Collocation Space will be available in the requested BellSouth Premises previously out of space. If Neutral Tandem has originally requested caged Collocation Space and cageless Collocation Space becomes available, Neutral Tandem may refuse such space and notify BellSouth in writing, within the thirty (30) day timeframe referenced above, that Neutral Tandem wishes to maintain its place on the waiting list for caged physical Collocation Space, without accepting the available cageless Collocation Space.

6.7.3 Neutral Tandem may accept an amount of space less than what it originally requested by submitting an application as set forth above, and, upon request, may maintain its position on the waiting list for the remaining space that was initially requested. If Neutral Tandem does not submit an application or notify BellSouth in writing within the thirty (30) day timeframe as described above in Section 6.7.2, BellSouth will offer the available space to the next telecommunications carrier on the waiting list and remove Neutral Tandem from the waiting list. Upon request, BellSouth will advise Neutral Tandem as to its position on the waiting list for a particular BellSouth Premises.

6.8 Public Notification. BellSouth will maintain on its Interconnection Services website, www.interconnection.bellsouth.com, a notification document that will indicate all BellSouth Premises that are without available space. BellSouth shall update such document within ten (10) days of the date that BellSouth becomes aware that insufficient space is available to accommodate physical Collocation. BellSouth will also post a document on its Interconnection Services website that contains a general notice when space becomes available in a BellSouth Premises previously on the space exhaust list.

6.9 Application Response.

6.9.1 In Alabama, Georgia, Kentucky, Louisiana, Mississippi, North Carolina, and South Carolina, when space has been determined to be available for physical (caged or cageless) Collocation arrangements, BellSouth will provide an Application Response within twenty (20) days of receipt of a Bona Fide application. The Application Response will be a written response that includes sufficient information to enable Neutral Tandem to place a Firm Order, which, at a minimum, will include the configuration of the space, the Cable Installation Fee, the Cable Records Fee, and any other applicable space preparation fees, as described in Section 8.

6.9.2 In Florida and Tennessee, within fifteen (15) days of receipt of a Bona Fide application, when space has been determined to be available or when a lesser amount of space than that requested is available, then with respect to the space available, BellSouth will provide an Application Response including sufficient information to enable Neutral Tandem to place a Firm Order. The Application Response will include, at a minimum, the configuration of the space, the Cable Installation Fee, the Cable Records Fee, and any other applicable space preparation fees, as described in Section 8. When Neutral Tandem submits ten (10) or more applications within ten (10) days, the initial fifteen (15) day response interval will increase by ten (10) days for every additional ten (10) applications or fraction thereof.

6.10 Application Modifications. If a modification or revision is made to any information in the Bona Fide application prior to a BFFO, with the exception of modifications to (1) Customer Information, (2) Contact Information or (3) Billing Contact Information, whether at the request of Neutral Tandem or as necessitated by technical

considerations, the application shall be considered a new application and handled as a new application with respect to the response and provisioning intervals. BellSouth will charge Neutral Tandem the appropriate application fee associated with the level of assessment performed by BellSouth, pursuant to Sections 6.1 and 6.2.

6.11 Bona Fide Firm Order.

6.11.1 Neutral Tandem shall indicate its intent to proceed with a Collocation Space request in a BellSouth Premises by submitting a Bona Fide Firm Order (BFFO) to BellSouth. The BFFO must be received by BellSouth no later than thirty (30) days after BellSouth's Application Response to Neutral Tandem's Bona Fide application or Neutral Tandem's application will expire.

6.11.2 BellSouth will establish a Firm Order date based upon the date BellSouth is in receipt of Neutral Tandem's BFFO. BellSouth will acknowledge the receipt of Neutral Tandem's BFFO within seven (7) days of receipt, so that Neutral Tandem will have positive confirmation that its BFFO has been received. BellSouth's response to a BFFO will include a Firm Order Confirmation, which contains the firm order date. No revisions may be made to a BFFO.

7. Construction and Provisioning

7.1 Construction and Provisioning Intervals.

7.1.1 In Florida and Tennessee, BellSouth will complete construction of physical Collocation Space as soon as possible within a maximum of ninety (90) days from receipt of a BFFO or as agreed to by the Parties. For virtual Collocation Space, BellSouth will complete construction as soon as possible within a maximum of sixty (60) days from receipt of a BFFO or as agreed to by the Parties. For Alterations requested to Collocation Space after the initial space has been completed, BellSouth will complete construction for Collocation Space as soon as possible within a maximum of forty-five (45) days from receipt of a BFFO or as agreed to by the Parties, as long as no additional space has been requested by Neutral Tandem, If additional space has been requested by Neutral Tandem, BellSouth will complete construction for the requested Collocation Space as soon as possible within a maximum of ninety (90) days from receipt of a BFFO for physical Collocation Space and forty five (45) days from receipt of a BFFO for virtual Collocation Space. If BellSouth does not believe that construction will be completed within the relevant provisioning interval and BellSouth and Neutral Tandem cannot agree upon a completion date, within forty-five (45) days of receipt of the BFFO for an initial request, or within thirty (30) days of receipt of the BFFO for an Alteration, BellSouth may seek an extension from the Commission.

7.1.2 In Alabama, Georgia, Kentucky, Louisiana, Mississippi, North Carolina, and South Carolina, BellSouth will complete construction for caged physical Collocation Space

under ordinary conditions as soon as possible within a maximum of ninety (90) days from receipt of a BFFO or as agreed to by the Parties. BellSouth will complete construction for cageless physical Collocation Space under ordinary conditions as soon as possible within a maximum of sixty (60) days from receipt of a BFFO and ninety (90) days from receipt of a BFFO for extraordinary conditions, or as agreed to by the Parties. Ordinary conditions are defined as space available with only minor changes required to BellSouth's support systems. (Examples include, but are not limited to: minor modifications to HVAC, cabling and BellSouth's power plant.) Extraordinary conditions include, but may not be limited to: major BellSouth equipment rearrangements or additions; power plant additions or upgrades; major mechanical additions or upgrades; major upgrades for ADA compliance; environmental hazards or hazardous materials abatement; and arrangements for which equipment shipping intervals are extraordinary in length. The Parties may mutually agree to renegotiate an alternative provisioning interval for the Collocation Space requested or BellSouth may seek a waiver from the ordered interval, as set forth above, from the appropriate Commission, if BellSouth does not believe that construction will be completed within the relevant provisioning interval.

7.1.3 Records Only Change. When Neutral Tandem adds equipment, that was originally included on Neutral Tandem's Initial Application or a Subsequent Application, and the addition of this equipment requires no additional space preparation work or cable terminations on the part of BellSouth, then BellSouth will impose no additional charges or intervals.

7.1.4 In the states of Alabama, Georgia, Kentucky, Louisiana, Mississippi, North Carolina, and South Carolina, BellSouth will provide the reduced intervals outlined below to Neutral Tandem, when Neutral Tandem requests an Alteration specifically identified in Sections 7.1.4.1 through 7.1.4.9 as an "Augment. Except as otherwise set forth in Section 7.1.4.10 below, such Augment will require a Subsequent Application and will result in the assessment of the appropriate application fee associated with the type of Augment requested by Neutral Tandem. BellSouth will assess the appropriate nonrecurring application fee set forth in Exhibit B on the date that it provides an Application Response to Neutral Tandem.

7.1.4.1 Simple Augments will be completed within twenty (20) days after receipt of the BFFO for an:

- Extension of Existing AC Circuit Capacity within Arrangement where Sufficient Circuit Capacity is Available
- Fuse Change and/or Increase or Decrease -48V DC Power from Existing BellSouth BDFB

7.1.4.2 Minor Augments will be completed within forty-five (45) days after receipt of the BFFO for:

- 168 DS1 Terminations at the BellSouth Demarcation Frame (Databasing Only; Panels, Relay Racks and Overhead Racking Exist)
- 96 DS3 Terminations at the BellSouth Demarcation Frame (Databasing Only; Panels, Relay Racks and Overhead Racking Exist)
- 99 Fiber Terminations at the BellSouth Demarcation Frame (Databasing Only; Panels, Relay Racks and Overhead Racking Exist)
- Maximum of 2000 Service Ready DS0 Terminations at the BellSouth Demarcation Frame (Databasing Only; Panels, Relay Racks and Overhead Racking Exist)

7.1.4.3 Intermediate Augments will be completed within sixty (60) days after receipt of the BFFO for:

- 168 DS1s (Databasing and Installation of Termination Panels, Relay Racks or Additional Structure, as Required)
- 96 DS3s (Databasing and Installation of Termination Panels, Relay Racks or Additional Structure, as Required)
- 99 Fiber Terminations (Databasing and Installation of Termination Panels, Relay Racks or Additional Structure, as Required)
- 2000 DS0s (Databasing and Installation of Termination Panels, Relay Racks or Additional Structure, as Required)
- Installation of Cable Racking or Other Support Structures, as Required, to Support Co-Carrier Cross Connects (Adequate Floor or Ceiling Structural Capacity Exists and Support/Protection Structure for Fiber Patch Cord is Excluded)

7.1.4.4 Major Augments of physical Collocation Space will be completed within ninety (90) days after BFFO. This category includes all requests for additional Physical Collocation Space (caged or cageless).

7.1.4.5 Major Augments of virtual Collocation Space will be completed within seventy-five (75) days after BFFO. This category includes all requests for additional virtual Collocation Space.

7.1.4.6 If Neutral Tandem submits an Augment that includes two Augment items from the same category in either Section 7.1.4.1, 7.1.4.2, or 7.1.4.3 above, the provisioning interval associated with the next highest Augment category will apply (e.g., if two items from the Minor Augment category are requested on the same request, then an interval of sixty (60) days from the receipt of the BFFO would apply, which is the interval associated with the Intermediate Augment category).

7.1.4.7 If Neutral Tandem submits an Augment that includes three Augment items from the same category in either Section 7.1.4.1, 7.1.4.2, or 7.1.4.3 above, the Major Augment interval of ninety (90) days from the receipt of the BFFO would apply (e.g., if three items from the Simple Augment category are requested on the same request for a

physical Collocation arrangement, then an interval of ninety (90) days from the receipt of the BFFO would apply, which is the Major physical Augment interval; likewise if three items from the Simple Augment category are requested on the same request for a virtual Collocation arrangement, then an interval of seventy-five (75) days from the receipt of the BFFO would apply, which is the Major virtual Augment interval).

7.1.4.8 If Neutral Tandem submits an Augment that includes one Augment item from two separate categories in Sections 7.1.4.1, 7.1.4.2 and 7.1.4.3 above, the Augment interval associated with the highest Augment category will apply (e.g., if an item from the Minor Augment category and an item from the Intermediate Augment category are requested on the same request, then an interval of sixty (60) days from the receipt of the BFFO would apply, which is the interval associated with the Intermediate Augment category).

7.1.4.9 All Augments not expressly included in the Simple, Minor, Intermediate or Major Augment categories, as outlined above, will be placed into the appropriate category as negotiated by Neutral Tandem and BellSouth. If Neutral Tandem and BellSouth are unable to determine the appropriate category through negotiation, then the appropriate Major Augment category, identified in Section 7.1.4.4 and Section 7.1.4.5, would apply based on whether the Augment is for Neutral Tandem's physical or virtual Collocation Space.

7.1.4.10 Individual application fees associated with Simple, Minor and Intermediate Augments are contained in Exhibit B. If Neutral Tandem requests multiple items from different Augment categories, BellSouth will bill Neutral Tandem the Augment application fee, as identified in Exhibit B of this Attachment, associated with the higher Augment category only. The appropriate application fee will be assessed to Neutral Tandem at the time BellSouth provides Neutral Tandem with the Application Response. Neutral Tandem will be assessed a Subsequent Application Fee for all Major Augments (Major Augments are defined above in Sections 7.1.4.4 and 7.1.4.5 for physical and virtual Collocation Space, respectively). The Subsequent Application Fee is also reflected in Exhibit B of this Attachment.

7.2 Joint Planning. Unless otherwise agreed to by the Parties, a joint planning meeting or other method of joint planning between BellSouth and Neutral Tandem will commence within a maximum of twenty (20) days from BellSouth's receipt of a BFFO. At such meeting, the Parties will agree to the preliminary design of the Collocation Space and the equipment configuration requirements, as reflected in the application and affirmed in the BFFO.

7.3 Permits. Each Party, its agent(s) or BellSouth Certified Supplier(s) will diligently pursue filing for the permits required for the scope of work to be performed by that Party, its agent(s) or BellSouth Certified Supplier(s) within ten (10) days of the completion of the finalized construction design and specifications.

7.4 Circuit Facility Assignments. Unless otherwise specified, BellSouth will provide Circuit Facility Assignments (CFAs) to Neutral Tandem prior to the applicable provisioning interval set forth herein (Provisioning Interval) for those BellSouth Premises in which Neutral Tandem has physical Collocation Space with no POT bay or with a grand fathered POT bay provided by BellSouth. BellSouth cannot provide CFAs to Neutral Tandem prior to the Provisioning Interval for those BellSouth Premises in which Neutral Tandem has physical Collocation Space with a POT bay provided by Neutral Tandem or virtual Collocation Space, until Neutral Tandem has provided BellSouth with the following information:

7.4.1 For physical Collocation Space with a Neutral Tandem-provided POT bay, Neutral Tandem shall provide BellSouth with a complete layout of the POT panels on an Equipment Inventory Update (EIU) form that shows the locations, speeds, etc.

7.4.2 For virtual Collocation Space, Neutral Tandem shall provide BellSouth with a complete layout of Neutral Tandem's equipment on an EIU form, that includes the locations of the low speed ports and the specific frame terminations to which the equipment will be wired by Neutral Tandem's BellSouth Certified Supplier.

7.4.3 BellSouth cannot begin work on the CFAs until the complete and accurate EIU form has been received from Neutral Tandem. If the EIU form is provided within ten (10) days prior to the ending date of the Provisioning Interval, then the CFAs will be made available by the ending date of the Provisioning Interval. If the EIU form is not received ten (10) days prior to the ending date of the Provisioning Interval, then the CFAs will be provided within ten (10) days of BellSouth's receipt of the EIU form.

7.4.4 BellSouth will bill Neutral Tandem a nonrecurring charge, as set forth in Exhibit B, each time Neutral Tandem requests a resend of its original CFA information for any reason other than a BellSouth error in the CFAs initially provided to Neutral Tandem.

7.5 Use of BellSouth Certified Supplier. Neutral Tandem shall select a supplier which has been approved as a BellSouth Certified Supplier to perform all engineering and installation work. Neutral Tandem, if a BellSouth Certified Supplier, or Neutral Tandem's BellSouth Certified Supplier must follow and comply with all of BellSouth's specifications and the following BellSouth Technical Requirements: TR 73503, TR 73519, TR 73572, and TR 73564. Unless the BellSouth Certified Supplier has met the requirements for all of the required work activities, Neutral Tandem must use a different BellSouth Certified Supplier for the work activities associated with transmission equipment, switching equipment and power equipment. BellSouth shall provide Neutral Tandem with a list of BellSouth Certified Suppliers, upon request. Neutral Tandem, if a BellSouth Certified Supplier, or Neutral Tandem's BellSouth Certified Supplier(s) shall be responsible for installing Neutral Tandem's equipment and associated components, extending power cabling to the BellSouth power distribution frame, performing operational tests after installation is complete, and notifying BellSouth's equipment engineers and Neutral Tandem upon successful

completion of the installation and any associated work. When a BellSouth Certified Supplier is used by Neutral Tandem, the BellSouth Certified Supplier shall bill Neutral Tandem directly for all work performed for Neutral Tandem pursuant to this Attachment. BellSouth shall have no liability for, nor responsibility to pay, such charges imposed by Neutral Tandem's BellSouth Certified Supplier. BellSouth shall make available its supplier certification program to Neutral Tandem or any supplier proposed by Neutral Tandem and will not unreasonably withhold certification. All work performed by or for Neutral Tandem shall conform to generally accepted industry standards.

7.6 Alarms and Monitoring. BellSouth shall place environmental alarms in the BellSouth Premises for the protection of BellSouth equipment and facilities. Neutral Tandem shall be responsible for the placement, monitoring and removal of environmental and equipment alarms used to service Neutral Tandem's Collocation Space. Upon request, BellSouth will provide Neutral Tandem with an applicable BellSouth tariffed service(s) to facilitate remote monitoring of collocated equipment by Neutral Tandem. Both Parties shall use best efforts to notify the other of any verified environmental condition (e.g., temperature extremes or excess humidity) known to that Party.

7.7 Virtual to Physical Relocation. In the event physical Collocation Space was previously denied at a BellSouth Premises due to technical reasons or space limitations and physical Collocation Space has subsequently become available, Neutral Tandem may relocate its existing virtual Collocation arrangement(s) to a physical Collocation arrangement(s) and pay the appropriate fees associated with the rearrangement or reconfiguration of the services being terminated into the virtual Collocation arrangement, as set forth in Exhibit B to this Attachment. If BellSouth knows when additional physical Collocation Space may become available at the BellSouth Premises requested by Neutral Tandem, such information will be provided to Neutral Tandem in BellSouth's written denial of physical Collocation Space. Neutral Tandem must arrange with a BellSouth Certified Supplier for the relocation of equipment from a virtual Collocation Space to a physical Collocation Space and will bear the cost of such relocation, including the costs associated with moving the services from the virtual Collocation Space to the new physical Collocation Space.

7.7.1 In Alabama, BellSouth will complete a relocation of a virtual collocation arrangement to a cageless physical collocation arrangement within sixty (60) days from BellSouth's receipt of a BFFO and from a virtual collocation arrangement to a caged physical collocation arrangement within ninety (90) days from BellSouth's receipt of a BFFO.

7.8 Virtual to Physical Conversion (In-Place). Virtual collocation arrangements may be converted to "in-place" physical caged collocation arrangements if the potential conversion meets all of the following criteria: 1) there is no change in the amount of equipment or the configuration of the equipment that was in the virtual Collocation Space; 2) the conversion of the virtual collocation arrangement will not cause the equipment or the results of that conversion to be located in a space that BellSouth has

reserved for its own future needs; and 3) any changes to the arrangement can be accommodated by existing power, HVAC, and other requirements. Unless otherwise specified herein, BellSouth will complete virtual to physical Collocation Space conversions (in-place) within sixty (60) days from receipt of the BFFO. BellSouth will bill Neutral Tandem an Administrative Only Application Fee, as set forth in Exhibit B, on the date BellSouth provides an Application Response to Neutral Tandem.

7.8.1 In Alabama and Tennessee, BellSouth will complete virtual to physical conversions (in place) within thirty (30) days from receipt of the BFFO as long as the conversion meets all of the criteria specified above in Section 7.8.

7.9 Cancellation. Unless otherwise specified in this Attachment, if at any time prior to Space Acceptance, Neutral Tandem cancels its order for Collocation Space (Cancellation), BellSouth will bill the applicable nonrecurring charge(s) for any and all work processes for which work has begun or been completed. In Florida, if Neutral Tandem cancels its order for Collocation Space at any time prior to the Space Ready Date, no cancellation fee shall be assessed by BellSouth; however, Neutral Tandem will be responsible for reimbursing BellSouth for any costs specifically incurred by BellSouth on behalf of Neutral Tandem up to the date that the written notice of cancellation was received by BellSouth. In Georgia, if Neutral Tandem cancels its order for Collocation Space at any time prior to space acceptance, BellSouth will bill Neutral Tandem for all costs incurred prior to the date of Cancellation and for any costs incurred as a direct result of the Cancellation, not to exceed the total amount that would have been due had the Firm Order not been canceled.

7.10 Licenses. Neutral Tandem, at its own expense, will be solely responsible for obtaining from governmental authorities, and any other appropriate agency, entity, or person, all rights, privileges, permits, licenses, and certificates necessary or required to operate as a provider of telecommunications services to the public or to build-out, equip and/or occupy Collocation Space in a BellSouth Premises.

7.11 Environmental Compliance. The Parties agree to utilize and adhere to the Environmental Hazard Guidelines identified in Exhibit A attached hereto.

8. Rates and Charges

8.1 Rates. Neutral Tandem agrees to pay the rates and charges identified in Exhibit B attached hereto.

8.2 Application Fees. BellSouth shall assess any non-recurring application fees within thirty (30) days of the date that BellSouth provides an Application Response to Neutral Tandem or on Neutral Tandem's next scheduled monthly billing statement.

8.2.1 In Tennessee, the application fee for caged Collocation Space shall be the Application – Cost Planning Fee for both Initial Applications and Subsequent Applications placed

by Neutral Tandem. Likewise, for cageless Collocation Space, the same Cageless - Application Fee applies for both Initial Applications and Subsequent Applications placed by Neutral Tandem. BellSouth will bill the appropriate non-recurring application fee on the date that BellSouth provides an Application Response to Neutral Tandem.

8.3 Recurring Charges. If Neutral Tandem has met the applicable fifteen (15) day acceptance walk through interval specified in Section 4.2, billing for recurring charges will begin upon the Space Acceptance Date. In the event Neutral Tandem fails to complete an acceptance walk through within the applicable fifteen (15) day interval, billing for recurring charges will commence on the Space Ready Date. If Neutral Tandem occupies the space prior to the Space Ready Date, the date Neutral Tandem occupies the space is deemed the Space Acceptance Date and billing for recurring charges will begin on that date. The billing for all applicable monthly recurring charges will begin in Neutral Tandem 's next billing cycle and will include any prorated charges for the period from Neutral Tandem's Space Acceptance Date or Space Ready Date, whichever is appropriate pursuant to Section 4.2, to the date the bill is issued by BellSouth.

8.3.1 Unless otherwise stated in Section 8.6 below, monthly recurring charges for -48V DC power will be assessed per fused amp, per month, based upon the total number of fused amps of power capacity requested by Neutral Tandem on Neutral Tandem's Initial Collocation Application and all Subsequent Collocation Applications, which may either increase or decrease the originally requested, and any subsequently augmented, number of fused amps of power capacity requested, consistent with Commission orders.

8.3.2 BellSouth shall have the right to inspect and inventory any DC power fuse installations at a BellSouth BDFB or DC power circuit installations at BellSouth's main power board for any Neutral Tandem collocation arrangement, to verify that the total number of fused amps of power capacity installed by Neutral Tandem's BellSouth Certified Supplier matches the number of fused amps of DC power capacity requested by Neutral Tandem on Neutral Tandem's Initial Application and all Subsequent Applications. If BellSouth determines that Neutral Tandem's BellSouth Certified Supplier has installed more DC capacity than Neutral Tandem requested on its Initial Application and all Subsequent Applications, BellSouth shall notify Neutral Tandem in writing of such discrepancy and shall assess Neutral Tandem for the additional DC power fuse/circuit capacity from the Space Acceptance Date or Space Ready Date, whichever is applicable pursuant to Section 8.3 above, for the most recent Initial Application or Subsequent Application, submitted for such collocation arrangement. BellSouth shall also revise Neutral Tandem's recurring DC power charges, on a going-forward basis, to reflect the higher number of fused amps of power capacity available for the collocation arrangement.

8.4 Nonrecurring Charges. In Florida, unless specified otherwise herein, BellSouth shall assess nonrecurring charges, including all application fees, within thirty (30) days of the date that BellSouth provides an Application Response to Neutral Tandem or on Neutral Tandem's next scheduled monthly billing statement, if Neutral Tandem's current month's billing cycle has already closed. Nonrecurring charges associated with the processing of the Firm Order for collocation space preparation (Firm Order Processing Fee) shall be billed by BellSouth within thirty (30) days of BellSouth's confirmation of Neutral Tandem's BFFO or on Neutral Tandem's next scheduled monthly billing statement.

8.5 Space Preparation. Space preparation fees consist of a nonrecurring charge for Firm Order Processing and monthly recurring charges for Central Office Modifications and Common Systems Modifications. For all states except Florida, Neutral Tandem shall remit the payment of the non-recurring Firm Order Processing Fee coincident with the submission of Neutral Tandem's BFFO. In Florida, the non-recurring Firm Order Processing Fee will be billed by BellSouth, pursuant to Section 8.4 above. The monthly recurring charge for Central Office Modifications will be assessed per arrangement, per square foot, for both caged and cageless physical Collocation Space. The monthly recurring charge for Common Systems Modifications will be assessed per arrangement, per square foot, for cageless physical Collocation Space and on a per cage basis for caged physical Collocation Space. These charges recover the costs associated with preparing the Collocation Space, which includes, but is not limited to, the following items: a survey, engineering of the Collocation Space, and design and modification costs for network, building and support systems.

8.6 Floor Space. The Floor Space Charge includes reasonable charges for lighting, HVAC, and other allocated expenses associated with maintenance of the BellSouth Premises; however, this charge does not include any expenses associated with AC or DC power supplied to Neutral Tandem's Collocation Space for the operation of Neutral Tandem's equipment.
For caged physical Collocation Space, -, Neutral Tandem shall pay floor space charges based upon the number of square feet enclosed. The minimum size for caged Collocation Space is 50 square feet. Additional caged Collocation Space may be requested in increments of 50 square feet. For cageless Collocation Space, Neutral Tandem shall pay floor space charges based upon the following floor space calculation: [(depth of the equipment lineup in which the rack is placed) + (0.5 x maintenance aisle depth) + (0.5 x wiring aisle depth)] x (width of rack and spacers). For purposes of this calculation, the depth of the equipment lineup shall consider the footprint of equipment racks plus any equipment overhang. BellSouth will assign cageless Collocation Space in conventional equipment rack lineups where feasible. In the event Neutral Tandem's collocated equipment requires special cable racking, an isolated ground plane, or any other considerations and treatment which prevents placement within conventional equipment rack lineups, Neutral Tandem shall be

required to request an amount of floor space sufficient to accommodate the total equipment arrangement.

8.7 Power. BellSouth shall make available –48 Volt (-48V) Direct Current (DC) power for Neutral Tandem's Collocation Space at a BellSouth Battery Distribution Fuse Bay (BDFB). When obtaining DC power from a BellSouth BDFB, Neutral Tandem's fuses and power cables (for the A & B feeds) must be engineered (sized), and installed by Neutral Tandem's BellSouth Certified Supplier, in accordance with the number of fused amps of DC power requested by Neutral Tandem on Neutral Tandem's Initial Application and any Subsequent Applications. Neutral Tandem is also responsible for contracting with a BellSouth Certified Supplier to run the power distribution feeder cable from the BellSouth BDFB to the equipment in Neutral Tandem's Collocation Space. The BellSouth Certified Supplier contracted by Neutral Tandem must provide BellSouth with a copy of the engineering power specifications prior to the day on which Neutral Tandem's equipment becomes operational (hereinafter "Commencement Date"). BellSouth will provide the common power feeder cable support structure between the BellSouth BDFB and Neutral Tandem's Collocation Space. Neutral Tandem shall contract with a BellSouth Certified Supplier who shall be responsible for performing those power provisioning activities required to enable Neutral Tandem's equipment to become operational, which may include, but are not limited to, the installation, removal or replacement of the following: dedicated power cable support structure within Neutral Tandem's Collocation Space, power cable feeds, and terminations of the power cabling. Neutral Tandem and Neutral Tandem's BellSouth Certified Supplier shall comply with all applicable NEC, BellSouth TR73503, Telcordia and ANSI Standards that address power cabling, installation, and maintenance.

8.7.1 In Florida only, pursuant to technical feasibility, commercial availability, and safety limitations, BellSouth will permit Neutral Tandem to request DC power in 5-amp increments from 5 amps up to 100 amps from the BellSouth BDFB. However, in accordance with industry standard fuse sizing, Neutral Tandem may request that BellSouth provision DC power of 70 amps or greater directly from BellSouth's main power board. The industry standard fuse size (which is a circuit breaker on the main power board) available at a BellSouth main power board in all BellSouth Premises is a 225-amp circuit breaker.

8.7.2 BellSouth will revise Neutral Tandem's recurring power charges, in accordance with Section 8.3 above, to reflect a power upgrade when Neutral Tandem submits a Subsequent Application requesting an increase in the number of fused amps it is currently receiving from BellSouth for its Collocation Space. If Neutral Tandem's existing fuses and power cables (for the A&B power feed) are not sufficient to support the additional number of fused amps requested, Neutral Tandem's BellSouth Certified Supplier shall perform whatever activities are necessary, which may include the installation of new/additional fuses or power cables, to comply with the appropriate

NEC, BellSouth TR73503, Telcordia, and ANSI Standards, as well as the requirements noted above in Section 8.7 and 8.7.1. Neutral Tandem's BellSouth Certified Supplier shall provide notification to BellSouth when these activities have been completed.

8.7.3 BellSouth will revise Neutral Tandem's recurring power charges, in accordance with Section 8.3 above, to reflect a power reduction upon BellSouth's receipt of the Power Reduction Form from Neutral Tandem, certifying the completion of the power reduction work, including the removal of any associated power cabling by Neutral Tandem's BellSouth Certified Supplier. Notwithstanding the foregoing, if Neutral Tandem's BellSouth Certified Supplier has not removed or, at BellSouth's discretion, cut the power cabling within thirty (30) days, the power reduction will not become effective until the cabling is removed or, at BellSouth's discretion, cut by Neutral Tandem 's BellSouth Certified Supplier and Neutral Tandem shall pay for the amount of power that had been requested prior to the power reduction request for the period up to the date the power cabling is actually removed.

8.7.4 If Neutral Tandem requests an increase or a reduction in the amount of power that BellSouth is currently providing, Neutral Tandem must submit a Subsequent Application. If no modification to the Collocation Space is requested other than the increase or reduction in power, the Power Reconfiguration Only Application Fee as set forth in Exhibit B will apply. If modifications are requested in addition to the increase or reduction of power, the Subsequent Application Fee will apply. BellSouth will bill this nonrecurring fee on the date that BellSouth provides an Application Response to Neutral Tandem's Subsequent Application.

8.7.5 If Neutral Tandem has existing power configurations currently served from the BellSouth main power board and requests that its power be reconfigured to connect to a BellSouth BDFB, in a specific central office, Neutral Tandem must submit a Subsequent Application. BellSouth will respond to such application within seven (7) days and a Subsequent Application fee will apply for this reconfiguration to a BellSouth BDFB.

8.7.6 If Neutral Tandem elects to install its own DC Power Plant, BellSouth shall provide Alternating Current (AC) power to feed Neutral Tandem's DC Power Plant. Charges for AC power will be assessed on a per breaker ampere, per month basis, pursuant to the rates specified in Exhibit B. The AC power rates include recovery for the provision of commercial and standby AC power. When obtaining power from a BellSouth service panel, protection devices and power cables must be engineered (sized) and installed by Neutral Tandem's BellSouth Certified Supplier, with the exception that BellSouth shall engineer and install protection devices and power cables for Adjacent Collocation. Neutral Tandem's BellSouth Certified Supplier must provide a copy of the engineering power specifications prior to the Commencement Date. AC power voltage and phase ratings shall be determined on a per location basis.

At Neutral Tandem's option, Neutral Tandem may arrange for AC power in an adjacent collocation arrangement from a retail provider of electrical power.

8.7.7 Neutral Tandem shall contract with a BellSouth Certified Supplier to perform the installation and removal of dedicated power cable support structure within Neutral Tandem's arrangement and terminations of cable within the Collocation Space.

8.7.8 Fused Amp Billing. In all states, except as noted above in 8.7.1 for Florida, BellSouth shall make available –48V DC power on a per fused amp, per month basis, pursuant to the following formula:

For power provisioned from a BDFB. The number of fused amps requested by Neutral Tandem on its application should reflect a multiplier of 1.5 to convert its requested amps to fused amps, with a minimum of ten (10) fused amps required. The number of fused amps requested by Neutral Tandem on its collocation application will be multiplied by the DC power fused amp rate set forth in Exhibit B.

For existing power configurations that are provisioned from BellSouth's main power board. The number of fused amps made available at the main power board, in increments of 225 amps/main power board circuit, will be multiplied by the DC power fused amp rate set forth in Exhibit B. In Florida, the number of fused amps requested by Neutral Tandem on its collocation application will be multiplied by the DC power fused amp rate set forth in Exhibit B

8.7.9 Florida Power Usage Option. In Florida only, Neutral Tandem may request that –48 DC power provisioned by BellSouth to Neutral Tandem's Collocation Space be assessed per ampere (amp), per month based upon amps used, pursuant to the rates set forth in Exhibit B of this Attachment. Monthly recurring power charges will be assessed on the Space Acceptance Date or Space Ready Date, whichever is appropriate, pursuant to Section 8.3. If Neutral Tandem desires to convert existing physical collocation arrangements to the Florida Power Usage Option (hereinafter "FL Option"), then the monthly recurring power charges that are applicable to the FL Option, contained in Exhibit B, will be assessed on the Space Ready Date associated with the Subsequent Application submitted by Neutral Tandem to convert an existing collocation arrangement to the FL Option. The monthly recurring charges for DC power, under the FL Option, shall be calculated and applied based on the amount of power Neutral Tandem requests that it be allowed to draw at a given time to a specific physical collocation arrangement in a particular BellSouth Premises on Neutral Tandem's Initial Application or Subsequent Application. BellSouth shall allow Neutral Tandem, at Neutral Tandem's option, to order a power feed that is capable of delivering a higher DC power level but to fuse this power feed so as to allow a power level less than the feed's maximum to be drawn by Neutral Tandem. BellSouth is not required to build its central office power infrastructure to meet Neutral Tandem's forecasted DC power demand. Neutral Tandem must specify on its Initial or

Subsequent Application the power level it wishes to be able to draw from BellSouth's power plant for each existing collocation arrangement Neutral Tandem converts to the FL Option or for any new collocation arrangements Neutral Tandem establishes under the FL Option.

8.7.9.1 BellSouth, at any time and at its own expense, shall have the right to verify the accuracy of Neutral Tandem's power usage under the FL Option for a specific collocation arrangement in a particular BellSouth Premises, based on a meter reading(s) taken by BellSouth of the amount of power being consumed by Neutral Tandem's collocation arrangement. BellSouth may perform its own meter reading(s) via any method it chooses, such as, but not limited to, a clamp-on ammeter. If the meter reading(s) varies by more than ten percent (10%) or five (5) amps from the power usage that has been requested by Neutral Tandem for the collocation arrangement, under the FL Option, the Parties agree to work cooperatively to reconcile such discrepancy and establish the appropriate usage figure in a reasonable and expeditious manner. If the Parties substantiate BellSouth's reading, then BellSouth shall adjust Neutral Tandem's billing to reflect BellSouth's power reading beginning with the first day of the month immediately following the date of the last metered reading taken by BellSouth.

8.7.9.2 BellSouth shall assess Neutral Tandem a monthly recurring charge for DC power under the FL Option, as set forth in Exhibit B of this Attachment. Neutral Tandem shall notify BellSouth of any change in its DC power usage by submitting a Subsequent Application, which reflects the new DC power level desired by Neutral Tandem. The requested change in DC power usage will be reflected in Neutral Tandem's next scheduled monthly billing cycle.

8.7.10 <u>Tennessee Caged Collocation Power Usage Metering Option.</u> In Tennessee only, Neutral Tandem may request that DC power provisioned by BellSouth to Neutral Tandem's caged Collocation Space be assessed pursuant to the Tennessee Regulatory Authority's Power Usage Metering Option (hereinafter "TN Option"). If Neutral Tandem chooses the TN Option, BellSouth will assess Neutral Tandem for -48V DC power using the following two components: (1) the actual measured AC usage, and (2) the DC power plant infrastructure provisioned by BellSouth to support the total number of fused amps of DC power requested by Neutral Tandem on Neutral Tandem's Initial Collocation Application and all Subsequent Collocation Applications. These monthly recurring power charges will be assessed by BellSouth on the Space Acceptance Date or Space Ready Date, whichever is appropriate, pursuant to Section 8.3. If Neutral Tandem desires to convert an existing caged collocation arrangement to the TN Option, then the monthly recurring power charges that are applicable to the TN Option, contained in Exhibit B, will be assessed on the Space Ready Date associated with the Subsequent Application submitted by Neutral Tandem to convert an existing caged collocation arrangement to the TN Option.

8.7.10.1 BellSouth, or its BellSouth Certified Supplier, will perform all metering activities, which will include providing the necessary ammeter or other measurement device, to measure the actual power usage (AC usage) being drawn by Neutral Tandem's collocation equipment on both the A and B power feeds. The AC Usage component of the DC power charge will be based upon the sum of either the instantaneous or busy hour average electric current readings, depending on the capabilities of the ammeter or other measurement device. Neutral Tandem may, at its sole cost and expense, install its own meters on those BDFBs located in its own caged Collocation Space(s) and may notify BellSouth if it would like to offer BellSouth the option of using such meters for the purposes of measuring Neutral Tandem's actual power usage. In such case, BellSouth, or its BellSouth Certified Supplier, will have the option of reading and recording the actual power usage from either the meter installed or maintained by Neutral Tandem on Neutral Tandem's own BDFB(s) or via a BellSouth provided measurement device. The usage reading for the option elected by BellSouth shall be used for purposes of calculating the DC power usage billing.

8.7.10.2 If BellSouth, or its BellSouth Certified Supplier, requires access to Neutral Tandem's caged Collocation Space(s) for purposes of measuring the power usage, BellSouth or its BellSouth Certified Supplier shall provide Neutral Tandem with a minimum of forty-eight (48) hours notice that access is required. Neutral Tandem shall respond to such request for access within twenty-four (24) hours for the purpose of establishing the date and time of access to Neutral Tandem's caged Collocation Space(s). Once the date and time of access to Neutral Tandem's caged Collocation Space(s) has been agreed upon, Neutral Tandem and BellSouth, or its BellSouth Certified Supplier, shall adhere to the agreed upon date and time, or provide a minimum of twenty-four (24) hours notice to the other Party if the original appointment(s) will be missed or must be canceled and rescheduled. If Neutral Tandem fails to provide access to its caged Collocation Space(s) or fails to provide BellSouth, or its BellSouth Certified Supplier, with sufficient notification of the missed appointment(s), as noted above, then Neutral Tandem shall pay the non-recurring "Additional Meter Reading Trip Charge", as set forth in Exhibit B of this Attachment, for each additional meter reading trip that must be rescheduled to measure Neutral Tandem's power usage for such caged Collocation Space(s). Neutral Tandem and the BellSouth Certified Supplier may jointly agree to less stringent notification requirements to address, for example, any service interruption or restoration of service situations, on a location-by-location basis.

8.7.10.3 For each new caged collocation arrangement for which Neutral Tandem desires the TN Option, Neutral Tandem shall indicate on Neutral Tandem's Initial Application that the TN Option is being selected. For each location that Neutral Tandem wishes to convert to the TN Option, Neutral Tandem will submit a Subsequent Application and agrees to include in the Comments section of the Subsequent Application the following comment:

This Subsequent Application is Neutral Tandem's certification that Neutral Tandem is opting to convert this caged collocation arrangement to the TN Option and will permit BellSouth, or the BellSouth Certified Supplier, to measure its actual power usage on all power feeds.

8.7.10.4 BellSouth will bill Neutral Tandem a Power Reconfiguration Only Application Fee, as set forth in Exhibit B of this Attachment, on the date that BellSouth provides an Application Response to each Subsequent Application submitted by Neutral Tandem requesting to convert a caged collocation arrangement to the TN Option. BellSouth shall then arrange for the measurement of Neutral Tandem's actual power usage on each power feed (each A and B power feed) once each quarter at each of Neutral Tandem's caged collocation arrangements for which Neutral Tandem has submitted an Initial or Subsequent Application electing the TN Option. Based upon the actual power usage measurement taken by BellSouth or the BellSouth Certified Supplier, BellSouth shall assess Neutral Tandemfor AC power usage for the following quarter based upon Neutral Tandem's actual metered usage for each power feed (both the A and B power feeds) or a minimum of ten (10) amps of –48V DC power usage for the sum of the A and B feeds for each power cable, whichever is greater. Such usage shall then be multiplied by the AC power consumption rate, set forth in Exhibit B of this Attachment, to determine the appropriate monthly recurring AC Usage charge that will be billed to Neutral Tandem for the following three (3) months or until the next AC power usage measurement is taken, whichever is later.

8.7.10.5 Either Party, within fifteen (15) days of notice of the usage measurement established by the scheduled meter reading, may challenge the accuracy of that reading by requesting a new reading. If Neutral Tandem requests that an unscheduled (prior to the next scheduled quarterly power reading date) power usage reading be taken, then Neutral Tandem will be responsible for paying the "Additional Meter Reading Trip Charge" contained in Exhibit B of this Attachment. If BellSouth requests a power usage reading be taken in this instance, then Neutral Tandem will not be charged the "Additional Meter Reading Trip Charge" for the unscheduled meter reading. If the readings vary by more than ten (10) % or five (5) Amps, whichever is greater, the Parties shall work cooperatively to reconcile such discrepancies and establish the appropriate usage figure in a reasonable and expeditious manner. If the readings do not vary outside these ranges, the initial reading will be used to calculate Neutral Tandem's AC Usage charge for the next three (3) months.

8.7.10.6 In the event BellSouth elects to measure Neutral Tandem's power using Neutral Tandem's BDFB meter, then BellSouth, at any time and at its own expense, shall have the right to verify the accuracy of Neutral Tandem's BDFB meter by performing its own meter reading via an alternate method, such as, but not limited to, an ammeter. If the meter readings vary significantly, the Parties agree to perform a joint investigation. If Neutral Tandem's BDFB meter is found to be in error, then Neutral Tandem agrees to recalibrate, repair, or replace its meter as required. The Parties recognize that the

meter readings discussed in this Attachment are instantaneous readings that can experience minor fluctuations due to usage traffic, voltage fluctuations, and calibration of the meters themselves. The readings must vary by more than ten (10) % or five (5) Amps, whichever is greater, before any recalibration, repair, or replacement will be required. If the BellSouth reading is substantiated, BellSouth shall adjust Neutral Tandem's billing retroactive to the beginning of the quarter for which the last meter reading was taken.

8.7.10.7 When Neutral Tandem submits the appropriate Initial or Subsequent Application indicating its desire to elect the TN Option for a specific caged collocation arrangement in a particular BellSouth Premises, BellSouth will provide the associated Application Response pursuant to Section 6 of this Attachment. It will then be the responsibility of Neutral Tandem to submit a BFFO, indicating its desire to proceed with its request to elect the TN Option. After BellSouth receives the BFFO from Neutral Tandem, the Initial or Subsequent Application will be completed by BellSouth within the provisioning intervals contained in Section 7 of this Attachment and Neutral Tandem will be notified of the Space Ready Date or when the appropriate record and database changes have been made by BellSouth to reflect Neutral Tandem's election of the TN Option (which will be considered the "Space Ready Date" for purposes of a Subsequent Application submitted to convert a specific caged collocation arrangement in a particular BellSouth Premises to the TN Option). BellSouth will not permit Neutral Tandem to elect an earlier Space Acceptance Date than the Space Ready Date for any request submitted via a Subsequent Application for an existing caged collocation arrangement. When a Subsequent Application is used to elect the TN Option and there are no other changes requested, billing for the recurring charges associated with the AC Usage and DC Power Infrastructure components will begin upon the Space Ready Date. If Neutral Tandem occupies the space prior to the Space Ready Date, for Initial Application requests only, the date Neutral Tandem occupies the space will be deemed the new Space Acceptance Date and billing for the AC Usage and DC Power Infrastructure components will begin on that date. When Neutral Tandem elects to move to the TN Option, the number of fused amps of DC Power infrastructure capacity requested by Neutral Tandem on its Initial or Subsequent Application will be used for calculating the number of amps to be billed for the AC Usage component until such time as BellSouth or its BellSouth Certified Supplier can perform, under the currently existing quarterly meter reading schedule, a reading of Neutral Tandem's power usage for the requested caged Collocation Space. As soon as this reading has been taken, BellSouth will adjust Neutral Tandem's billing accordingly to reflect the actual metered usage back to the Space Acceptance Date. BellSouth will also use this reading for billing purposes until the next quarterly meter reading is performed by BellSouth or its BellSouth Certified Supplier.

8.7.10.8 BellSouth shall assess Neutral Tandem the monthly recurring charge as set forth in Exhibit B of this Attachment for BellSouth's power plant infrastructure component of the DC power charges based upon the number of fused DC power amps requested by

Neutral Tandem, as reflected by Neutral Tandem on its Initial Application, as well as any Subsequent Applications (i.e., augment applications), for the particular caged collocation arrangement(s) converted to the TN Option or any new caged collocation arrangement(s) for which Neutral Tandem has chosen the TN Option.

8.7.10.9 Neutral Tandem agrees to submit a Subsequent Application to notify BellSouth when Neutral Tandem has removed or installed telecommunications equipment in Neutral Tandem's physical Collocation Space to ensure that Neutral Tandem's existing fused DC power capacity is sufficiently engineered to accommodate the power requirements associated with the installation of additional equipment in Neutral Tandem's Collocation Space. An associated change in power usage will be reflected in the next quarterly power measurement billing cycle.

8.7.10.10 BellSouth will bill Neutral Tandem a monthly recurring charge per caged Collocation Space for each arrangement that Neutral Tandem has converted to the TN Option or has elected the TN Option for new caged Collocation Space. This "Meter Reading" monthly recurring rate element will be assessed to Neutral Tandem for the first twelve (12) power circuits (each A and B feed counts as two circuits), and then for each additional two (2) circuits, read by BellSouth or its BellSouth Certified Supplier, at the rates set forth in Exhibit B of this Attachment and based on whether the power meter is provided by BellSouth or its BellSouth Certified Supplier or Neutral Tandem.

8.7.11 In Alabama and Louisiana, Neutral Tandem has the option to purchase power directly from an electric utility company. Under such option, Neutral Tandem is responsible for contracting with the electric utility company for its own power feed and meter and is financially responsible for purchasing all equipment necessary to accomplish the arrangement, including inverters, batteries, power boards, bus bars, BDFBs, backup power supplies and cabling. The actual work to install this arrangement must be performed by a BellSouth Certified Supplier hired by Neutral Tandem. Neutral Tandem's BellSouth Certified Supplier must comply with all applicable safety codes, including the NEC and National Electric Safety Code (NESC) standards, in the installation of this power arrangement. If Neutral Tandem currently has power supplied by BellSouth, Neutral Tandem may request to change its Collocation Space to obtain power from an electric utility company by submitting a Subsequent Application. BellSouth will waive the application fee for this Subsequent Application if no other changes are requested therein. Any floor space, cable racking, etc. utilized by Neutral Tandem in provisioning said power will be billed by BellSouth on an ICB basis.

8.7.12 In South Carolina, Neutral Tandem has the option to purchase power directly from an electric utility company where technically feasible and where space is available in a requested BellSouth Premises. Under such option, Neutral Tandem is responsible for contracting with the electric utility company for its own power feed and meter, and is financially responsible for purchasing all equipment necessary to accomplish the conversion of the commercial AC power to DC power, including inverters, batteries,

power boards, bus bars, BDFBs, backup power supplies and power cabling. The actual work to install this arrangement must be performed by a BellSouth Certified Supplier hired by Neutral Tandem. Neutral Tandem's BellSouth Certified Supplier must comply with all applicable national, regional, state and local safety, electrical, fire and building codes, including the NESC standards, in the installing this power arrangement, just as BellSouth is required to comply with these codes. Neutral Tandem must submit an application to BellSouth for the appropriate amount of Collocation Space that Neutral Tandem requires in order to install this type of power arrangement. BellSouth will evaluate the request and determine if the appropriate amount of space is available within the BellSouth Premises for the installation of Neutral Tandem's power equipment and facilities. This type of power arrangement must be located in an appropriate area in the BellSouth Premises that has been properly conditioned for the installation of power equipment and conforms to the applicable national, regional, state and local safety, electrical, fire and building codes. BellSouth shall waive the application fee or any other nonrecurring charge that would otherwise be due from a competitive local exchange carrier (CLEC) that decides to reconfigure an existing collocation power arrangement so as to purchase power directly from an electric utility company as provided herein. Neutral Tandem shall be responsible for the recurring charges associated with the additional space needed in the BellSouth Premises for this type of power arrangement, including space required to place associated power-related equipment and facilities (i.e., batteries, generator, fuse panel, power meter, etc.). If there is no space available for this type of power arrangement in the requested BellSouth Premises, BellSouth may seek a waiver of these requirements from the Commission for the BellSouth Premises requested. Neutral Tandem would have the option to order its power needs directly from BellSouth

8.7.13 In Alabama and Louisiana, if Neutral Tandem has existing power configurations currently served from the BellSouth main power board and requests that its power be reconfigured to connect to a BellSouth BDFB, in a specific BellSouth Premises, Neutral Tandem must submit a Subsequent Application to BellSouth. BellSouth will provide a response to such application within seven (7) days and no application fee will be assessed by BellSouth for this one time only power reconfiguration to a BellSouth BDFB. For any power reconfigurations thereafter, Neutral Tandem will submit a Subsequent Application and the appropriate application fee will apply.

8.8 Cable Installation. Cable Installation fees will be assessed on a per entrance cable basis. This nonrecurring charge will be billed by BellSouth upon receipt of Neutral Tandem's BFFO.

8.9 Cable Records. Cable Records charges apply for work activities required to build or remove existing cable records assigned to Neutral Tandem in BellSouth's database systems. The VG/DS0 per cable record charge is for a maximum of 3,600 records per request. The fiber cable record charge is for a maximum of 99 records per request.

Cable Record fees will be assessed as a nonrecurring charge, upon receipt of Neutral Tandem's BFFO, in all BellSouth states, except Louisiana. In Louisiana, Cable Record fees will be assessed on a monthly recurring charge basis, upon receipt of Neutral Tandem's BFFO.

8.10 Security Escort. After Neutral Tandem has used its one accompanied site visit, pursuant to Section 5.12.1, and prior to Neutral Tandem's completion of the BellSouth Security Training requirements, contained in Section 12 of this Agreement, a security escort will be required when Neutral Tandem's employees, approved agent, supplier, or Guest(s) desire access to the entrance manhole or a BellSouth Premises. The rates for security escort service are assessed pursuant to the fee schedule contained in Exhibit B, beginning with the scheduled escort time agreed to by the Parties. BellSouth will wait for one-half (1/2) hour after the scheduled escort time to provide such requested escort service and Neutral Tandem shall pay for such half-hour charges in the event Neutral Tandem's employees, approved agent, supplier or Guest(s) fails to show up for the scheduled escort appointment.

8.11 Other. If no collocation rate element and associated rate is identified in Exhibit B of this Attachment, the Parties, upon request by either Party, will negotiate the rate for the specific collocation service or function identified in this Attachment.

9. Insurance

9.1 Neutral Tandem shall, at its sole cost and expense, procure, maintain, and keep in force insurance as specified in this Section and underwritten by insurance companies licensed to do business in the states applicable under this Agreement and having a Best's Insurance Rating of A-.

9.2 Neutral Tandem shall maintain the following specific coverage:

9.2.1 Commercial General Liability coverage in the amount of ten million dollars ($10,000,000.00) or a combination of Commercial General Liability and Excess/Umbrella coverage totaling not less than ten million dollars ($10,000,000.00). BellSouth shall be named as an Additional Insured on the Commercial General Liability policy as specified herein.

9.2.2 Statutory Workers Compensation coverage and Employers Liability coverage in the amount of one hundred thousand dollars ($100,000.00) each accident, one hundred thousand dollars ($100,000.00) each employee by disease, and five hundred thousand dollars ($500,000.00) policy limit by disease.

9.2.3 All Risk Property coverage on a full replacement cost basis insuring all of Neutral Tandem's real and personal property situated on or within a BellSouth Premises.

9.2.4 Neutral Tandem may elect to purchase business interruption and contingent business interruption insurance, having been advised that BellSouth assumes no liability for loss of profit or revenues should an interruption of service occur.

9.3 The limits set forth in Section 9.2 above may be increased by BellSouth from time to time during the term of this Agreement, upon thirty (30) days notice to Neutral Tandem, to at least such minimum limits as shall then be customary with respect to comparable occupancy of BellSouth structures.

9.4 All policies purchased by Neutral Tandem shall be deemed to be primary and not contributing to or in excess of any similar coverage purchased by BellSouth. All insurance must be in effect on or before the date equipment is delivered to BellSouth's Premises and shall remain in effect for the term of this Agreement or until all of Neutral Tandem's property has been removed from BellSouth's Premises, whichever period is longer. If Neutral Tandem fails to maintain required coverage, BellSouth may pay the premiums thereon and seek reimbursement of same from Neutral Tandem.

9.5 Neutral Tandem shall submit certificates of insurance reflecting the coverage required pursuant to this Section within a minimum of ten (10) business days prior to the commencement of any work in the Collocation Space. Failure to meet this interval may result in construction and equipment installation delays. Neutral Tandem shall arrange for BellSouth to receive thirty (30) business days' advance notice of cancellation or non-renewal from Neutral Tandem's insurance company. Neutral Tandem shall forward a certificate of insurance and notice of cancellation/non-renewal to BellSouth at the following address:

BellSouth Telecommunications, Inc.
Attn.: Risk Management Office - Finance
17F54 BellSouth Center
675 W. Peachtree Street
Atlanta, Georgia 30375

9.6 Neutral Tandem must conform to recommendations made by BellSouth's fire insurance company to the extent BellSouth has agreed to, or shall hereafter agree to, such recommendations.

9.7 Self-Insurance. If Neutral Tandem's net worth exceeds five hundred million dollars ($500,000,000.00), Neutral Tandem may elect to request self-insurance status in lieu of obtaining any of the insurance required in Section 9.2. Neutral Tandem shall provide audited financial statements to BellSouth thirty (30) days prior to the commencement of any work in the Collocation Space. BellSouth shall then review such audited financial statements and respond in writing to Neutral Tandem in the event that self-insurance status is not granted to Neutral Tandem. If BellSouth approves Neutral Tandem for self-insurance, Neutral Tandem shall annually furnish to BellSouth, and keep current, evidence of such net worth that is attested to by one of

Neutral Tandem's corporate officers. The ability to self-insure shall continue so long as the Neutral Tandem meets all of the requirements of this Section. If Neutral Tandem subsequently no longer satisfies the requirements of this Section, Neutral Tandem is required to purchase insurance as indicated by Section 9.2.

9.8 The net worth requirements set forth in Section 9.7 may be increased by BellSouth from time to time during the term of this Agreement upon thirty (30) days' notice to Neutral Tandem to at least such minimum limits as shall then be customary with respect to comparable occupancy of a BellSouth Premises

9.9 Failure to comply with the provisions of this Section will be deemed a material breach of this Attachment.

10. Mechanics Lien

10.1 If any mechanics lien or other liens are filed against property of either Party (BellSouth or Neutral Tandem), or any improvement thereon by reason of or arising out of any labor or materials furnished or alleged to have been furnished or to be furnished to or for the other Party or by reason of any changes, or additions to said property made at the request or under the direction of the other Party, the other Party directing or requesting those changes shall, within thirty (30) business days after receipt of written notice from the Party against whose property said lien has been filed, either pay such lien or cause the same to be bonded off the affected property in the manner provided by law. The Party causing said lien to be placed against the property of the other shall also defend, at its sole cost and expense, on behalf of the other, any action, suit or proceeding which may be brought for the enforcement of such liens and shall pay any damage and discharge any judgment entered thereon.

11. Inspections

11.1 BellSouth may conduct an inspection of Neutral Tandem's equipment and facilities in Neutral Tandem's Collocation Space(s) prior to the activation of facilities and/or services between Neutral Tandem's equipment and equipment of BellSouth. BellSouth may conduct an inspection if Neutral Tandem adds equipment and may otherwise conduct routine inspections at reasonable intervals mutually agreed upon by the Parties. BellSouth shall provide Neutral Tandem with a minimum of forty-eight (48) hours or two (2) business days, whichever is greater, advance notice of all such inspections. All costs of such inspections shall be borne by BellSouth.

12. Security and Safety Requirements

12.1 Unless otherwise specified, Neutral Tandem will be required, at its own expense, to conduct a statewide investigation of criminal history records for each Neutral Tandem employee hired in the past five years being considered for work on a BellSouth Premises, for the states/counties where the Neutral Tandem employee has worked and

lived for the past five years. Where state law does not permit statewide collection or reporting, an investigation of the applicable counties is acceptable. Neutral Tandem shall not be required to perform this investigation if an affiliated company of Neutral Tandem has performed an investigation of the Neutral Tandem employee seeking access, if such investigation meets the criteria set forth above. This requirement will not apply if Neutral Tandem has performed a pre-employment statewide investigation of criminal history records of the Neutral Tandem employee for the states/counties where the Neutral Tandem employee has worked and lived for the past five years or, where state law does not permit a statewide investigation, an investigation of the applicable counties.

12.2 Neutral Tandem will be required to administer to its personnel assigned to the BellSouth Premises security training either provided by BellSouth, or meeting criteria defined by BellSouth at www.interconnection.bellsouth.com/guides.

12.3 Neutral Tandem shall provide its employees and agents with picture identification, which must be worn and visible at all times while in Neutral Tandem's Collocation Space or other areas in or around the BellSouth Premises. The photo identification card shall bear, at a minimum, the employee's name and photo and Neutral Tandem's name. BellSouth reserves the right to remove from a BellSouth Premises any employee of Neutral Tandem not possessing identification issued by Neutral Tandem or who has violated any of BellSouth's policies as outlined in the CLEC Security Training documents. Neutral Tandem shall hold BellSouth harmless for any damages resulting from such removal of Neutral Tandem's personnel from a BellSouth Premises. Neutral Tandem shall be solely responsible for ensuring that any Guest(s) of Neutral Tandem is in compliance with all subsections of this Section.

12.4 Neutral Tandem shall not assign to the BellSouth Premises any personnel with records of felony criminal convictions. Neutral Tandem shall not assign to the BellSouth Premises any personnel with records of misdemeanor convictions, except for misdemeanor traffic violations, without advising BellSouth of the nature and gravity of the offense(s). BellSouth reserves the right to refuse building access to any of Neutral Tandem's personnel who have been identified to have misdemeanor criminal convictions. Notwithstanding the foregoing, in the event Neutral Tandem chooses not to advise BellSouth of the nature and gravity of any misdemeanor conviction, Neutral Tandem may, in the alternative, certify to BellSouth that it shall not assign to the BellSouth Premises any personnel with records of misdemeanor convictions (other than misdemeanor traffic violations).

12.4.1 Neutral Tandem shall not knowingly assign to the BellSouth Premises any individual who was a former employee of BellSouth and whose employment with BellSouth was terminated for a criminal offense, whether or not BellSouth sought prosecution of the individual for the criminal offense.

12.4.2 Neutral Tandem shall not knowingly assign to the BellSouth Premises any individual who was a former supplier of BellSouth and whose access to a BellSouth Premises was revoked due to the commission of a criminal offense, whether or not BellSouth sought prosecution of the individual for the criminal offense.

12.5 For each Neutral Tandem employee or agent hired by Neutral Tandem within the last five years, who requires access to a BellSouth Premises to perform work in Neutral Tandem Collocation Space(s), Neutral Tandem shall furnish BellSouth certification that the aforementioned background check and security training were completed. This certification must be provided to and approved by BellSouth before an employee or agent will be granted such access to a BellSouth Premises. The certification will contain a statement that no felony convictions were found and certify that the employee completed the security training. If the employee's criminal history includes misdemeanor convictions, Neutral Tandem will disclose the nature of the convictions to BellSouth at that time. In the alternative, Neutral Tandem may certify to BellSouth that it shall not assign to the BellSouth Premises any personnel with records of misdemeanor convictions, other than misdemeanor traffic violations.

12.5.1 For all other Neutral Tandem employees requiring access to a BellSouth Premises pursuant to this Attachment, Neutral Tandem shall furnish BellSouth, prior to an employee gaining such access, a certification that the employee is not subject to the requirements of Section 12.5 above and that security training was completed by the employee.

12.6 At BellSouth's request, Neutral Tandem shall promptly remove from the BellSouth Premises any employee of Neutral Tandem that BellSouth does not wish to grant access to a BellSouth Premises: 1) pursuant to any investigation conducted by BellSouth, or 2) prior to the initiation of an investigation if an employee of Neutral Tandem is found interfering with the property or personnel of BellSouth or another collocated telecommunications carrier, provided that an investigation shall be promptly commenced by BellSouth.

12.7 Security Violations. BellSouth reserves the right to interview Neutral Tandem's employees, agents, suppliers, or Guests in the event of wrongdoing in or around a BellSouth Premises or involving BellSouth's or another collocated telecommunications carrier's property or personnel, provided that BellSouth shall provide reasonable notice to Neutral Tandem's Security representative of such interview. Neutral Tandem and its employees, agents, suppliers, or Guests shall reasonably cooperate with BellSouth's investigation into allegations of wrongdoing or criminal conduct committed by, witnessed by, or involving Neutral Tandem's employees, agents, suppliers, or Guests. Additionally, BellSouth reserves the right to bill Neutral Tandem for all reasonable costs associated with investigations involving its employees, agents, suppliers, or Guests if it is established and mutually agreed in good faith that Neutral Tandem's employees, agents, suppliers, or Guests are responsible for the alleged act(s). BellSouth shall bill Neutral Tandem for BellSouth property, which

is stolen or damaged, where an investigation determines the culpability of Neutral Tandem's employees, agents, suppliers, or Guests and where Neutral Tandem agrees, in good faith, with the results of such investigation. Neutral Tandem shall notify BellSouth in writing immediately in the event that Neutral Tandem discovers one of its employees, agents, suppliers, or Guests already working on the BellSouth Premises is a possible security risk. Upon request of the other Party, the Party who is the employer shall discipline consistent with its employment practices, up to and including removal from BellSouth's Premises, any employee found to have violated the security and safety requirements of this Section. Neutral Tandem shall hold BellSouth harmless for any damages resulting from such removal of Neutral Tandem's personnel from a BellSouth Premises.

12.8 Use of Supplies. Unauthorized use of equipment, supplies or other property by either Party, whether or not used routinely to provide telephone service will be strictly prohibited and handled appropriately. Costs associated with such unauthorized use may be charged to the offending Party, as may be all associated investigative costs.

12.9 Use of Official Lines. Except for non-toll calls necessary in the performance of their work, neither Party shall use the telephone(s) of the other Party on BellSouth's Premises. Charges for unauthorized telephone calls may be charged to the offending Party, as may be all associated investigative costs.

12.10 Accountability. Full compliance with the Security requirements of this Section shall in no way limit the accountability of either Party to the other for the improper actions of its employees, agents, suppliers, or Guests.

13. Destruction of Collocation Space

13.1 In the event a Collocation Space is wholly or partially damaged by fire, windstorm, hurricane, tornado, flood or by similar force majeure circumstances to such an extent as to be rendered wholly unsuitable for Neutral Tandem's permitted use hereunder, then either Party may elect within ten (10) days after such damage, to terminate occupancy of the damaged Collocation Space, and if either Party shall so elect, by giving the other written notice of termination, both Parties shall stand released of and from further liability under the terms hereof. If the Collocation Space shall suffer only minor damage and shall not be rendered wholly unsuitable for Neutral Tandem's permitted use, or is damaged and the option to terminate is not exercised by either Party, BellSouth covenants and agrees to proceed promptly without expense to Neutral Tandem, except for improvements not to the property of BellSouth, to repair the damage. BellSouth shall have a reasonable time within which to rebuild or make any repairs, and such rebuilding and repairing shall be subject to delays caused by storms, shortages of labor and materials, government regulations, strikes, walkouts, and causes beyond the control of BellSouth, which causes shall not be construed as limiting factors, but as exemplary only. Neutral Tandem may, at its own expense, accelerate the rebuild of its Collocation Space and equipment provided, however, that

a BellSouth Certified Supplier is used and the necessary space preparation has been completed. If Neutral Tandem's acceleration of the project increases the cost of the project, then those additional charges will be incurred at Neutral Tandem's expense. Where allowed and where practical, Neutral Tandem may erect a temporary facility while BellSouth rebuilds or makes repairs. In all cases where the Collocation Space shall be rebuilt or repaired, Neutral Tandem shall be entitled to an equitable abatement of rent and other charges, depending upon the unsuitability of the Collocation Space for Neutral Tandem's permitted use, until such Collocation Space is fully repaired and restored and Neutral Tandem's equipment installed therein (but in no event later than thirty (30) days after the Collocation Space is fully repaired and restored). Where Neutral Tandem has placed an Adjacent Arrangement pursuant to Section 3.4, Neutral Tandem shall have the sole responsibility to repair or replace said Adjacent Arrangement provided herein. Pursuant to this Section, BellSouth will restore the associated services to the Adjacent Arrangement.

14. Eminent Domain

14.1 If the whole of a Collocation Space or Adjacent Arrangement shall be taken by any public authority under the power of eminent domain, then this Attachment shall terminate with respect to such Collocation Space or Adjacent Arrangement as of the date possession shall be taken by such public authority and rent and other charges for the Collocation Space or Adjacent Arrangement shall be paid up to that day with a proportionate refund by BellSouth of such rent and charges as may have been paid in advance for a period subsequent to the date of the taking. If any part of the Collocation Space or Adjacent Arrangement shall be taken under eminent domain, BellSouth and Neutral Tandem shall each have the right to terminate this Attachment with respect to such Collocation Space or Adjacent Arrangement and declare the same null and void, by written notice of such intention to the other Party within ten (10) days after such taking.

15. Nonexclusivity

15.1 Neutral Tandem understands that this Attachment is not exclusive and that BellSouth may enter into similar agreements with other Parties. Assignment of Collocation Space pursuant to all such agreements shall be determined by space availability and made on a first come, first served basis

ENVIRONMENTAL AND SAFETY PRINCIPLES

The following principles provide basic guidance on environmental and safety issues when applying for and establishing physical collocation arrangements.

1. GENERAL PRINCIPLES

1.1 Compliance with Applicable Law. BellSouth and Neutral Tandem agree to comply with applicable federal, state, and local environmental and safety laws and regulations including U.S. Environmental Protection Agency (USEPA) regulations issued under the Clean Air Act (CAA), Clean Water Act (CWA), Resource Conservation and Recovery Act (RCRA), Comprehensive Environmental Response, Compensation and Liability Act (CERCLA), Superfund Amendments and Reauthorization Act (SARA), the Toxic Substances Control Act (TSCA), and OSHA regulations issued under the Occupational Safety and Health Act of 1970, as amended, and National Fire Protection Association (NFPA), NEC and National Electric Safety Codes (NESC) (Applicable Laws) requirements. Each Party shall notify the other if compliance inspections are conducted by regulatory agencies and/or citations are issued that relate to any aspect of this Attachment.

1.2 Notice. BellSouth and Neutral Tandem shall provide notice to the other, including any Material Safety Data Sheets (MSDSs), of known and recognized physical hazards or Hazardous Chemicals existing on site or brought on site. A Hazardous Chemical inventory list is posted on an OSHA Poster and updated annually at each Central Office. This Poster is normally located near the front entrance of the building or in the lounge area. Each Party is required to provide specific notice for known potential Imminent Danger conditions. Neutral Tandem should contact 1-800-743-6737 for any BellSouth MSDS required.

1.3 Practices/Procedures. BellSouth may make available additional environmental control procedures for Neutral Tandem to follow when working at a BellSouth Premises (See Section 2, below). These practices/procedures will represent the regular work practices required to be followed by the employees and suppliers of BellSouth for environmental protection. Neutral Tandem will require its suppliers, agents, Guests, and others accessing the BellSouth Premises to comply with these practices. Section 2 lists the Environmental categories where BST practices should be followed by Neutral Tandem when operating in the BellSouth Premises.

1.4 Environmental and Safety Inspections. BellSouth reserves the right to inspect the Neutral Tandem space with proper notification. BellSouth reserves the right to stop any Neutral Tandem work operation that imposes Imminent Danger to the environment, employees or other persons in or around a BellSouth Premises.

1.5 Hazardous Materials Brought On Site. Any hazardous materials brought into, used, stored or abandoned at a BellSouth Premises by Neutral Tandem are owned by and considered the property of Neutral Tandem. Neutral Tandem will indemnify BellSouth for claims, lawsuits or damages to persons or property caused by these materials. Without prior written BellSouth approval, no substantial new safety or environmental hazards can be created by Neutral Tandem or different

hazardous materials used by Neutral Tandem at a BellSouth Premises. Neutral Tandem must demonstrate adequate emergency response capabilities for the materials used by Neutral Tandem or remaining at a BellSouth Premises.

1.6 Spills and Releases. When contamination is discovered at a BellSouth Premises, either Party discovering the condition must notify the other Party. All Spills or Releases of regulated materials will immediately be reported by Neutral Tandem to BellSouth.

1.7 Coordinated Environmental Plans and Permits. BellSouth and Neutral Tandem will coordinate plans, permits or information required to be submitted to government agencies, such as emergency response plans, spill prevention control and countermeasures (SPCC) plans and community reporting. If fees are associated with filing, BellSouth and Neutral Tandem will develop a cost sharing procedure. If BellSouth's permit or EPA identification number must be used, Neutral Tandem must comply with all of BellSouth's permit conditions and environmental processes, including environmental "best management practices (BMP)" (see Section 2, below) and the selection of BST disposition vendors and disposal sites.

1.8 Environmental and Safety Indemnification. BellSouth and Neutral Tandem shall indemnify, defend and hold harmless the other Party from and against any claims (including, without limitation, third-party claims for personal injury or death or real or personal property damage), judgments, damages (including direct and indirect damages and punitive damages), penalties, fines, forfeitures, costs, liabilities, interest and losses arising in connection with the violation or alleged violation of any Applicable Law or contractual obligation or the presence or alleged presence of contamination arising out of the acts or omissions of the indemnifying Party, its employees, agents, suppliers, or Guests concerning its operations at a BellSouth Premises.

2. CATEGORIES FOR CONSIDERATION OF ENVIRONMENTAL ISSUES

2.1 When performing functions that fall under the following Environmental categories on BellSouth's Premises, Neutral Tandem agrees to comply with the applicable sections of the current issue of BellSouth's Environmental and Safety Methods and Procedures (M&Ps), incorporated herein by this reference. Neutral Tandem further agrees to cooperate with BellSouth to ensure that Neutral Tandem's employees, agents, suppliers and/or Guests are knowledgeable of and satisfy those provisions of BellSouth's Environmental M&Ps, which apply to the specific Environmental function being performed by Neutral Tandem, its employees, agents, suppliers, and/or Guests.

2.2 The most current version of the reference documentation must be requested from Neutral Tandem's BellSouth Regional Contract Manager (RCM).

ENVIRONMENTAL CATEGORIES	ENVIRONMENTAL ISSUES	ADDRESSED BY THE FOLLOWING DOCUMENTATION
Disposal of hazardous material or other regulated material (e.g., batteries, fluorescent tubes, solvents & cleaning materials)	Compliance with all applicable local, state, & federal laws and regulations Pollution liability insurance EVET approval of supplier	Std T&C 450 Fact Sheet Series 17000 Std T&C 660-3 Approved Environmental Vendor List (Contact RCM Representative)
Emergency response	Hazmat/waste release/spill fire safety emergency	Fact Sheet Series 17000 Building Emergency Operations Plan (EOP) (specific to and located on BellSouth's Premises)
Contract labor/outsourcing for services with environmental implications to be performed on BellSouth Premises (e.g., disposition of hazardous material/waste; maintenance of storage tanks)	Compliance with all applicable local, state, & federal laws and regulations Performance of services in accordance with BST's environmental M&Ps Insurance	Std T&C 450 Std T&C 450-B (Contact RCM Representative for copy of appropriate E/S M&Ps.) Std T&C 660
Transportation of hazardous material	Compliance with all applicable local, state, & federal laws and regulations Pollution liability insurance EVET approval of supplier	Std T&C 450 Fact Sheet Series 17000 Std T&C 660-3 Approved Environmental Vendor List (Contact RCM Representative)
Maintenance/operations work which may produce a waste Other maintenance work	Compliance with all applicable local, state, & federal laws and regulations Protection of BST employees and equipment	Std T&C 450 29CFR 1910.147 (OSHA Standard)

		29CFR 1910 Subpart O (OSHA Standard)
Janitorial services	All waste removal and disposal must conform to all applicable federal, state and local regulations All Hazardous Material and Waste Asbestos notification and protection of employees and equipment	Procurement Manager (CRES Related Matters)-BST Supply Chain Services Fact Sheet Series 17000 GU-BTEN-001BT, Chapter 3 BSP 010-170-001BS (Hazcom)
Manhole cleaning	Compliance with all applicable local, state, & federal laws and regulations Pollution liability insurance EVET approval of supplier	Std T&C 450 Fact Sheet 14050 BSP 620-145-011PR Issue A, August 1996 Std T&C 660-3 Approved Environmental Vendor List (Contact RCM Representative)
Removing or disturbing building materials that may contain asbestos	Asbestos work practices	GU-BTEN-001BT, Chapter 3 For questions regarding removing or disturbing materials that contain asbestos, call the BellSouth Building Service Center: AL, MS, TN, KY & LA (local area code) 557-6194 FL, GA, NC & SC (local area code) 780-2740

3. DEFINITIONS

Generator. Under RCRA, the person whose act produces a Hazardous Waste, as defined in 40 CFR 261, or whose act first causes a Hazardous Waste to become subject to regulation. The Generator is legally responsible for the proper management and disposal of Hazardous Wastes in accordance with regulations.

Hazardous Chemical. As defined in the U.S. Occupational Safety and Health (OSHA) hazard communication standard (29 CFR 1910.1200), any chemical which is a health hazard or physical hazard.

Hazardous Waste. As defined in Section 1004 of RCRA.

Imminent Danger. Any conditions or practices at a BellSouth Premises which are such that a danger exists which could reasonably be expected to cause immediate death or serious harm to people or immediate significant damage to the environment or natural resources.

Spill or Release. As defined in Section 101 of CERCLA.

4. ACRONYMS

RCM – Regional Collocation Manager (f/k/a Account Team Collocation Coordinator)

BST – BellSouth Telecommunications

CRES – Corporate Real Estate and Services (formerly PS&M)

DEC/LDEC - Department Environmental Coordinator/Local Department Environmental Coordinator

E/S – Environmental/Safety

EVET - Environmental Vendor Evaluation Team

GU-BTEN-001BT - BellSouth Environmental Methods and Procedures

NESC - National Electrical Safety Codes

P&SM - Property & Services Management

Std T&C - Standard Terms & Conditions

Attachment 4

Remote Site Collocation

REMOTE SITE COLLOCATION
TABLE OF CONTENTS

1. Scope of Attachment
- **1.1 Scope**
- **1.2 Right to Occupy**
- **1.3. Space Reservation**
- **1.4. Third Party Property**
- **1.5 Space Reclamation**
- **1.6 Use of Space**
- **1.7 Due Dates**
- **1.8 Compliance**

2. Space Availability Optional Report
- **2.1 Space Availability Optional Report**
- **2.2 Remote Terminal Information**

3. Collocation Options
- **3.1 Cageless Collocation**
- **3.2 Caged Collocation**
- **3.3 Shared Caged Collocation**
- **3.4 Adjacent Collocation**
- **3.5 Co-Carrier Cross Connects (CCXCs)**

4. Occupancy
- **4.1. Space Ready Date**
- **4.2 Acceptance Walk Through**
- **4.3 Early Space Acceptance**
- **4.4 Termination of Occupancy**

5. Use of Remote Collocation Space
- **5.1. Equipment Type**
- **5.2. No Marketing**
- **5.3. Equipment Identification**
- **5.4. Entrance Facilities**
- **5.5 Shared Use**
- **5.6 Demarcation Point**
- **5.7 Equipment and Facilities**
- **5.8 BellSouth Access**
- **5.9 Customer Access**
- **5.10 Lost or Stolen Access Keys**
- **5.11 Interference or Impairment**
- **5.12 Personalty and Its Removal**
- **5.13 Alterations**
- **5.14 Upkeep of Remote Collocation Space**

6. Ordering and Preparation of Remote Collocation Space
- **6.1. Procedures and Intervals**
- **6.2. Remote Site Application**
- **6.3 Availability of Space**
- **6.4 Space Availability Notification**
- **6.5 Denial of Application**
- **6.6 Petition for Waiver**
- **6.7 Waiting List**
- **6.8 Public Notification**
- **6.9 Application Response**
- **6.10 Application Modifications**
- **6.11 Bona Fide Firm Order**

7. Construction and Provisioning
- **7.1 Construction and Provisioning Intervals**
- **7.2. Joint Planning**
- **7.3. Permits**
- **7.4 Use of a BellSouth Certified Supplier**
- **7.5 Alarms and Monitoring**
- **7.6 Virtual to Physical Remote Collocation Space Relocation**
- **7.7 Virtual to Physical Conversion (In-Place)**
- **7.8 Cancellation**
- **7.9 Licenses**
- **7.10 Environmental Compliance**

8. Rates and Charges
- **8.1. Rates**
- **8.2 Recurring Charges**
- **8.3 Application Fee**
- **8.4 Bay Space**
- **8.5 Power**
- **8.6 Adjacent Collocation Power**
- **8.7 Security Escort**
- **8.8 Other**

9. Insurance

10. Mechanics Liens

11. Inspections

12. Security and Safety Requirements

13. Destruction of Remote Collocation Space

14. Eminent Domain

15. Nonexclusivity

EXHIBIT A ENVIRONMENTAL AND SAFETY PRINCIPLES

EXHIBIT B RATES

BELLSOUTH

REMOTE SITE COLLOCATION

1. Scope of Attachment

1.1 Scope. The rates, terms, and conditions contained within this Attachment shall only apply when Neutral Tandem is occupying the collocation space as a sole occupant or as a Host within a Remote Site Location ("Remote Collocation Space") pursuant to this Attachment. BellSouth Premises include BellSouth Central Offices and Serving Wire Centers (hereinafter "BellSouth Premises"). This Attachment is applicable to BellSouth Premises owned or leased by BellSouth. However, if the BellSouth Premises occupied by BellSouth is leased by BellSouth from a third party, special considerations and intervals may apply in addition to the terms and conditions contained in this Attachment.

1.2 Right to occupy. BellSouth shall offer to Neutral Tandem Remote Collocation Space on rates, terms, and conditions that are just, reasonable, non-discriminatory, and consistent with the rules of the Federal Communications Commission ("FCC"). Subject to the rates, terms, and conditions of this Attachment, where space is available and collocation is technically feasible, BellSouth will allow Neutral Tandem to occupy that certain area designated by BellSouth within a BellSouth Remote Site Location, or on BellSouth property upon which the BellSouth Remote Site Location is located, of a size, which is specified by Neutral Tandem and agreed to by BellSouth. BellSouth Remote Site Locations include cabinets, huts, and controlled environmental vaults owned or leased by BellSouth that house BellSouth Network Facilities. To the extent this Attachment does not include all the necessary rates, terms and conditions for BellSouth Remote Site Locations other than cabinets, huts and controlled environmental vaults, the Parties will negotiate said rates, terms, and conditions upon request for collocation at BellSouth Remote Site Locations other than those specified above.

1.3 Space Reservation.

1.3.1 In all states other than Florida, the number of bays specified by Neutral Tandem may contemplate a request for space sufficient to accommodate Neutral Tandem's growth within a two-year period.

1.3.2 In the state of Florida, the number of bays specified by Neutral Tandem may contemplate a request for space sufficient to accommodate Neutral Tandem's growth within an eighteen (18) month period.

1.3.3 Neither BellSouth nor any of BellSouth's affiliates may reserve space for future use on more preferential terms than those set forth above.

1.4 Third Party Property. If the Premises, or the property on which it is located, is leased by BellSouth from a Third Party or otherwise controlled by a Third Party, special considerations and intervals may apply in addition to the terms and conditions of this Attachment. Additionally, where BellSouth notifies Neutral Tandem that BellSouth's agreement with a Third Party does not grant BellSouth the ability to provide access and use rights to others, upon Neutral Tandem's request, BellSouth will use its best efforts to obtain the owner's consent and to otherwise secure such rights for Neutral Tandem. Neutral Tandem agrees to reimburse BellSouth for the reasonable and demonstrable costs incurred by BellSouth in obtaining such rights for Neutral Tandem. In cases where a Third Party agreement does not grant BellSouth the right to provide access and use rights to others as contemplated by this Attachment and BellSouth, despite its best efforts, is unable to secure such access and use rights for Neutral Tandem as above, Neutral Tandem shall be responsible for obtaining such permission to access and use such property. BellSouth shall cooperate with Neutral Tandem in obtaining such permission.

1.5 Space Reclamation. In the event of space exhaust within a Remote Site Location, BellSouth may include in its documentation for the Petition for Waiver filing any unutilized space in the Remote Site Location. Neutral Tandem will be responsible for any justification of unutilized space within its Remote Collocation Space, if the Commission requires such justification.

1.6 Use of Space. Neutral Tandem shall use the Remote Collocation Space for the purposes of installing, maintaining and operating Neutral Tandem's equipment (which may include testing and monitoring equipment) necessary for interconnection with BellSouth services and facilities or for accessing BellSouth unbundled network elements (UNEs) in accordance with the Act and FCC and Commission rules. The Remote Collocation Space may be used for no other purposes except as specifically described herein or in any amendment hereto.

1.7 Due Dates. If any due date contained in this Attachment falls on a weekend or National holiday, then the due date will be the next business day thereafter. For intervals of ten (10) days or less National holidays will be excluded. . For purposes of this Attachment, national holidays include the following: New Year's Day, Martin Luther King, Jr. Day, President's Day (Washington's Birthday), Memorial Day, Independence Day, Labor Day, Columbus Day, Veteran's Day, Thanksgiving Day, and Christmas Day.

1.8 Compliance. Subject to Section 24 of the General Terms and Conditions of this Agreement, the Parties agree to comply with all applicable federal, state, county, local and administrative laws, rules, ordinances, regulations and codes in the performance of their obligations hereunder.

2. Space Availability Optional Report

2.1 Space Availability Optional Report. Upon request from Neutral Tandem, BellSouth will provide a written report ("Space Availability Report"), describing in detail the space that is available for collocation and specifying the amount of Remote Collocation Space available at the Remote Site Location requested, the number of collocators present at the Remote Site Location, any modifications in the use of the space since the last report on the Remote Site Location requested and the measures BellSouth is taking to make additional space available for collocation arrangements. A Space Availability Report does not reserve space at the Remote Site Location.

2.1.1 The request from Neutral Tandem for a Space Availability Report must be written and must include the Common Language Location Identification ("CLLI") code for both the Remote Site Location and the serving wire center. The CLLI code information for the serving wire center is located in the National Exchange Carrier Association (NECA) Tariff FCC No. 4. If Neutral Tandem is unable to obtain the CLLI code for the Remote Site Location from, for example, a site visit to the remote site, Neutral Tandem may request the CLLI code from BellSouth. To obtain a CLLI code for a Remote Site Location directly from BellSouth, Neutral Tandem should submit to BellSouth a Remote Site Interconnection Request for the serving wire center CLLI code prior to submitting its request for a Space Availability Report. Neutral Tandem should complete all the requested information and submit the Request to BellSouth. BellSouth will bill the applicable fee upon receipt of the request.

2.1.2 BellSouth will respond to a request for a Space Availability Report for a particular Remote Site Location within ten (10) days of receipt of such request. BellSouth will make commercially reasonable efforts to respond in ten (10) days to such a request when the request includes from two (2) to five (5) Remote Site Locations within the same state. The response time for requests of more than five (5) Remote Site Locations shall be negotiated between the Parties. If BellSouth cannot meet the ten (10) day response time, BellSouth shall notify Neutral Tandem and inform Neutral Tandem of the time frame under which it can respond.

2.2 Remote Terminal Information. Upon request, BellSouth will provide Neutral Tandem with the following information concerning BellSouth's remote terminals: (i) the address of the remote terminal; (ii) the CLLI code of the remote terminal; (iii) the carrier serving area of the remote terminal; (iv) the designation of which remote terminals subtend a particular central office; and (v) the number and address of customers that are served by a particular remote terminal.

2.2.1 BellSouth will provide this information on a first come, first served basis within thirty (30) days of a Neutral Tandem request subject to the following conditions: (i) the information will only be provided on a CD in the same format in which it appears in BellSouth's systems; (ii) the information will only be provided for each serving wire center designated by Neutral Tandem, up to a maximum of thirty (30) wire centers per Neutral Tandem request per month per state, and up to for a maximum of one hundred twenty (120) wire centers total per month per state for all CLECs; and (iii) Neutral Tandem agrees to pay the costs incurred by BellSouth in providing the information. Multiple Wire Center CLLI code requests may be place on one CD.

3. Collocation Options

3.1 Cageless Collocation. BellSouth shall allow Neutral Tandem to collocate Neutral Tandem's equipment and facilities without requiring the construction of a cage or similar structure. BellSouth shall allow Neutral Tandem to have direct access to Neutral Tandem's equipment and facilities in accordance with Section 5.8. BellSouth shall make cageless collocation available in single bay increments. Except where Neutral Tandem's equipment requires special technical considerations (e.g., special cable racking or isolated ground plane), BellSouth shall assign cageless Remote Collocation Space in conventional equipment rack lineups where feasible. For equipment requiring special technical considerations, Neutral Tandem must provide the equipment layout, including spatial dimensions for such equipment pursuant to generic requirements contained in Telcordia GR-63-Core, and shall be responsible for compliance with all special technical requirements associated with such equipment pursuant to Section 7.4 following.

3.2 Caged Collocation. At Neutral Tandem's option and expense, Neutral Tandem may arrange with a Supplier certified by BellSouth ("BellSouth Certified Supplier") to construct a collocation arrangement enclosure, where technically feasible as that term has been defined by the FCC, in accordance with BellSouth's specifications for a wire mesh enclosure prior to starting equipment installation. Where local building codes require enclosure specifications more stringent than BellSouth's wire mesh enclosure specifications, Neutral Tandem and Neutral Tandem's BellSouth Certified Supplier must comply with the more stringent local building code requirements. Neutral Tandem's BellSouth Certified Supplier shall be responsible for filing and obtaining any and all necessary permits and/or licenses for such construction. BellSouth or BellSouth's designated agent or contractor shall provide, at Neutral Tandem's expense, documentation, which may include existing building architectural drawings, enclosure drawings, and specifications etc., necessary for Neutral Tandem's BellSouth Certified Supplier to obtain the zoning, permits and/or other licenses. Neutral Tandem's BellSouth Certified Supplier shall bill Neutral Tandem directly for all work performed for Neutral Tandem pursuant to this Attachment and BellSouth shall have no liability for nor responsibility to pay such charges imposed by Neutral Tandem's BellSouth Certified Supplier. Neutral Tandem must provide the local BellSouth Remote Site Location contact with two Access Keys used to enter the locked enclosure. Except in case of emergency, BellSouth will not access Neutral Tandem's

locked enclosure prior to notifying Neutral Tandem at least forty-eight (48) hours or two (2) business days, whichever is greater, before access to Neutral Tandem's Remote Site Location is required. Upon request, BellSouth shall construct the enclosure for Neutral Tandem.

3.2.1 BellSouth may elect to review Neutral Tandem's plans and specifications, if Neutral Tandem has indicated its desire to have Neutral Tandem's BellSouth Certified Supplier construct the collocation arrangement enclosure, prior to allowing the construction to start, to ensure Neutral Tandem's compliance with BellSouth's wire mesh enclosure specifications. BellSouth will notify Neutral Tandem of its desire to execute this review in BellSouth's Application Response to Neutral Tandem's application. The Application Response is defined for purposes of this Attachment as BellSouth's written response that includes sufficient information for Neutral Tandem to place a firm order for the Remote Collocation Space it is requesting. If Neutral Tandem's application does not indicate their desire to construct their own enclosure and Neutral Tandem subsequently decides to construct its own enclosure prior to BellSouth's Application Response, then Neutral Tandem will resubmit its application, indicating its desire to construct its own enclosure. BellSouth shall complete its review within fifteen (15) days after BellSouth's receipt of Neutral Tandem's plans and specifications. Regardless of whether or not BellSouth elects to review Neutral Tandem's plans and specifications, BellSouth reserves the right to inspect the enclosure after construction to make sure it is constructed according to the submitted plans and specifications and/or BellSouth's wire mesh enclosure specifications, as applicable. If BellSouth decides to inspect the constructed Remote Collocation Space, BellSouth will complete its inspection within fifteen (15) days after receipt of Neutral Tandem's written notification that the enclosure has been completed. BellSouth shall require Neutral Tandem, at Neutral Tandem's expense, to remove or correct within seven (7) days after BellSouth has completed its inspection of Neutral Tandem's caged Remote Collocation Space, any structure that does not meet Neutral Tandem's plans and specifications or BellSouth's wire mesh enclosure specifications, as applicable.

3.3 Shared Caged Collocation. Neutral Tandem may allow other telecommunications carriers to sublease Neutral Tandem's Remote Collocation Space pursuant to terms and conditions agreed to by Neutral Tandem ("Host") and other telecommunications carriers ("Guests") and pursuant to this Section, except where the BellSouth Remote Site Location is located within a leased space and BellSouth is prohibited by said lease from offering such an option or is located on property for which BellSouth holds an easement and such easement does not permit such an option. Neutral Tandem shall notify BellSouth in writing upon execution of any agreement between the Host and its Guest prior to any application. Further, such notice shall include the name of the Guest(s) and the term of the agreement, and shall contain a certification by Neutral Tandem that said agreement imposes upon the Guest(s) the same terms and conditions for Remote Collocation Space as set forth in this Attachment between BellSouth and Neutral Tandem.

3.3.1 Neutral Tandem, as the Host, shall be the sole interface and responsible Party to BellSouth for assessment of rates and charges contained within this Attachment and for the purposes of ensuring that the safety and security requirements of this Attachment are fully complied with by the Guest, its employees and agents. BellSouth shall provide Neutral Tandem with a proration of the costs of the Remote Collocation Space based on the number of collocators and the space used by each. BellSouth will not allocate less than one (1) bay per Host/Guest. In those instances where the Host permits a Guest to use a shelf within the Host's bay, BellSouth will not prorate the cost of the bay. In all states other than Florida, and in addition to the foregoing, Neutral Tandem shall be the responsible Party to BellSouth for the purpose of submitting applications for bay placement for the Guest. In Florida the Guest may submit its own initial bay placement applications using the Host's access carrier name abbreviation (ACNA). A separate Guest application shall require the assessment of an Application Fee, as set forth in Exhibit B, which will be charged to the Host. BellSouth shall bill this nonrecurring fee on the date that BellSouth provides it written Application Response to the Guest(s) bona fide application.

3.3.2 Notwithstanding the foregoing, the Guest may arrange directly with BellSouth for the provision of the interconnecting facilities between BellSouth and the Guest and for the provision of the services, and/or access to UNEs. The bill for these interconnecting facilities, services and access to UNEs will be charged to the Guest pursuant to the applicable BellSouth tariff or the Guest's Interconnection Agreement with BellSouth.

3.3.3 Neutral Tandem shall indemnify and hold harmless BellSouth from any and all claims, actions, causes of action, of whatever kind or nature arising out of the presence of Neutral Tandem's Guest(s) in the Remote Collocation Space except to the extent caused by BellSouth's sole negligence, gross negligence, or willful misconduct.

3.4 Adjacent Collocation. Subject to technical feasibility and space availability, BellSouth will permit an adjacent Remote Site collocation arrangement ("Adjacent Arrangement") on the property on which BellSouth's Remote Site is located when space within the Remote Site Location is legitimately exhausted, where the Adjacent Arrangement does not interfere with access to existing or planned structures or facilities on the Remote Site Location property. The Adjacent Arrangement shall be constructed or procured by Neutral Tandem and in conformance with BellSouth's design and construction specifications. Further, Neutral Tandem shall construct, procure, maintain and operate said Adjacent Arrangement pursuant to all of the terms and conditions set forth in this Attachment. Rates shall be negotiated at the time of the application for the Adjacent Arrangement.

3.4.1 Should Neutral Tandem elect Adjacent Collocation, Neutral Tandem must arrange with a BellSouth Certified Supplier to construct or procure an Adjacent Arrangement structure in accordance with BellSouth's specifications. Where local building codes require specifications more stringent than BellSouth's own specifications, Neutral Tandem and Neutral Tandem's BellSouth Certified Supplier must comply with local

building code requirements. Neutral Tandem's BellSouth Certified Supplier shall be responsible for filing and obtaining any and all necessary zoning, permits and/or licenses for such construction. Neutral Tandem's BellSouth Certified Supplier shall bill Neutral Tandem directly for all work performed for Neutral Tandem pursuant to this Attachment and BellSouth shall have no liability for nor responsibility to pay such charges imposed by Neutral Tandem's BellSouth Certified Supplier. Neutral Tandem must provide the local BellSouth Remote Site Location contact with two cards, keys or other access device used to enter the locked enclosure. Except in cases of emergency, BellSouth shall not access Neutral Tandem's locked enclosure prior to notifying Neutral Tandem at least forty-eight (48) hours or two (2) business days, whichever is greater, before access to the locked enclosure is required.

3.4.2 Neutral Tandem must submit its plans and specifications to BellSouth with its firm order. BellSouth shall review Neutral Tandem's plans and specifications prior to construction of an Adjacent Arrangement to ensure compliance with BellSouth's specifications. BellSouth shall complete its review within fifteen (15) days after receipt of plans and specifications. BellSouth may inspect the Adjacent Arrangement during and after construction to confirm it is constructed according to the submitted plans and specifications. If BellSouth decides to inspect the completed Adjacent Arrangement, BellSouth will complete its inspection within fifteen (15) days after receipt of Neutral Tandem's written notification that the Adjacent Arrangement has been completed. BellSouth shall require Neutral Tandem, at Neutral Tandem's expense, to remove or correct within seven (7) days after BellSouth has completed its inspection of Neutral Tandem's Adjacent Arrangement, any structure that does not meet its submitted plans and specifications or, BellSouth's specifications, as applicable.

3.4.3 Neutral Tandem shall provide a concrete pad, the structure housing the Adjacent Arrangement, HVAC, lighting, and all facilities that connect the structure (i.e. racking, conduits, etc.) to the BellSouth point of demarcation. At Neutral Tandem's option, and where the local authority having jurisdiction permits, BellSouth shall provide an AC power source and access to physical collocation services and facilities subject to the same nondiscriminatory requirements as applicable to any other physical collocation arrangement. In Alabama and Louisiana, at Neutral Tandem's request and expense, BellSouth will provide DC power to an Adjacent Collocation site where technically feasible, as that term has been defined by the FCC, and in accordance with applicable law, BellSouth will provide DC power in an Adjacent Arrangement provided that such provisioning can be done in compliance with the National Electric Code (NEC), any and all safety and local codes, such as, but not limited to, local zoning codes, and upon completion of negotiations between the Parties on the applicable rates and intervals. Neutral Tandem will pay for any and all (100%) DC power construction and provisioning costs to an Adjacent Arrangement through individual case basis (ICB) pricing that must be paid as follows: fifty percent (50%) before the DC installation work begins, and fifty percent (50%) at completion of the DC installation work to the Adjacent Arrangement. Neutral Tandem's BellSouth

Certified Supplier shall be responsible, at Neutral Tandem's expense, for filing and receiving any and all necessary zoning, permits and/or licenses for such arrangement. BellSouth shall allow Shared caged Host/Guest collocation within an Adjacent Arrangement pursuant to the terms and conditions set forth herein.

3.5 Co-Carrier Cross-Connects (CCXCs). A Co-Carrier Cross Connect (CCXC) is a cross connection between Neutral Tandem and another collocated telecommunications carrier, other than BellSouth, in the same BellSouth Remote Site Location. Where technically feasible, BellSouth will permit Neutral Tandem to interconnect between its Remote Collocation Space(s) and Remote Collocation Space(s) of another (or other) collocated telecommunications carrier(s) within the same BellSouth Remote Site Location via a CCXC, pursuant to FCC Rules. The other collocated telecommunications carrier's agreement must also contain CCXC rates, terms and conditions before BellSouth will permit the provisioning of CCXC between the two collocated carriers. The applicable BellSouth charges will be assessed to the collocated telecommunications carrier that requests the CCXC. Neutral Tandem is prohibited from using the Remote Collocation Space for the sole or primary purpose of cross-connecting to other collocated telecommunications carriers.

3.5.1 Neutral Tandem must contract with a BellSouth Certified Supplier to place the CCXC. The CCXC shall be provisioned using facilities owned by Neutral Tandem. Such cross-connections to other collocated telecommunications carriers may be made using either optical or electrical facilities. Neutral Tandem shall be responsible for providing a letter of authorization (LOA), with the application, to BellSouth from the other collocated telecommunications carrier to which it will be cross-connecting. The CCXC shall utilize BellSouth common cable support structure. . There will be a recurring charge per linear foot, per cable, of the common cable support structure used by Neutral Tandem to provision the CCXC to the other collocated telecommunications carrier. In those instances where Neutral Tandem's equipment and the equipment of the other collocated telecommunications carrier are located in contiguous caged Remote Collocation Spaces, Neutral Tandem may use its own technicians to install the co-carrier cross connects using either electrical or optical facilities between the sets of equipment of both collocated telecommunications carriers by constructing a dedicated cable support structure between the two contiguous cages. Neutral Tandem shall deploy such optical or electrical cross-connections directly between its own equipment and the equipment of the other collocated telecommunications carrier without being routed through BellSouth's equipment or, in the case of a CCXC provisioned between contiguous collocation spaces, common cable support structure. . Neutral Tandem shall not provision CCXC on any BellSouth distribution frame, POT (Point of Termination) Bay, DSX (Digital System Cross-connect) panel or LGX (Light Guide Cross-connect) panel. Neutral Tandem is solely responsible for ensuring the integrity of the signal.

3.5.2 To place an order for a CCXC, Neutral Tandem must submit an application to BellSouth. If no modification to the Remote Collocation Space is requested other

than the placement of a CCXC, the Co-Carrier Cross Connect Application Fee for a CCXC, as defined in Exhibit B, will apply. If other modifications are requested, in addition to the placement of a CCXC, the Application Fee will apply. BellSouth will bill this nonrecurring charge on the date that it provides an Application Response to Neutral Tandem.

4. Occupancy

4.1 Space Ready Date. BellSouth will notify Neutral Tandem in writing that the Remote Collocation Space is ready for occupancy ("Space Ready Date").

4.2 Acceptance Walk Through. Neutral Tandem will schedule and complete an acceptance walkthrough of each Remote Collocation Space with BellSouth within fifteen (15) days after BellSouth notifies Neutral Tandem that Remote Collocation Space is ready for occupancy (“Space Ready Date”). BellSouth will correct any deviations to Neutral Tandem’s original or jointly amended requirements within seven (7) days after the walkthrough, unless the Parties jointly agree upon a different time frame, and BellSouth shall establish a new Space Ready Date. Another acceptance walkthrough will then be scheduled and conducted within fifteen (15) days after the new Space Ready Date. This follow-up acceptance walkthrough will be limited to those items identified in the initial walkthrough. If Neutral Tandem completes its acceptance walkthrough within the fifteen (15) day interval(s) associated with the applicable Space Ready Date, billing will begin upon the date of Neutral Tandem’s acceptance of the Remote Collocation Space (“Space Acceptance Date”). In the event that Neutral Tandem fails to complete an acceptance walkthrough within this fifteen (15) day interval, the Remote Collocation Space shall be deemed accepted by Neutral Tandem on the Space Ready Date and billing will commence from that date.

4.3 Early Space Acceptance. If Neutral Tandem decides to occupy the Remote Collocation Space prior to the Space Ready Date, the date Neutral Tandem occupies the space is deemed the Space Acceptance Date and billing will begin from that date. Neutral Tandem must notify BellSouth in writing that its collocation equipment installation is complete. Neutral Tandem’s collocation equipment installation is complete, which is when Neutral Tandem’s equipment has been cross-connected to BellSouth’s network for the purpose of provisioning telecommunication services to Neutral Tandem’s customers. BellSouth may, at its discretion, refuse to accept any orders for cross-connects until it has received such notice from Neutral Tandem.

4.4 Termination of Occupancy. In addition to any other provisions addressing termination of occupancy in this Attachment, Neutral Tandem may terminate occupancy in a particular Remote Collocation Space by submitting an application requesting termination of occupancy for such Remote Collocation Space. Such termination shall be effective upon BellSouth’s acceptance of the Space Relinquishment Form. Billing for monthly recurring charges will cease on the date Neutral Tandem and BellSouth conduct an inspection of the terminated space and jointly sign off on the Space Relinquishment Form or on the date that Neutral Tandem signs off on the Space

Relinquishment Form and sends the form to BellSouth if a subsequent inspection of the terminated space by BellSouth reveals no discrepancies. If the subsequent inspection by BellSouth reveals any discrepancies, billing will cease on the date that BellSouth and Neutral Tandem jointly conduct an inspection, which confirms that Neutral Tandem has corrected the discrepancies. An Application Fee will not apply for termination of occupancy. BellSouth may terminate Neutral Tandem's right to occupy the Remote Collocation Space in the event Neutral Tandem fails to comply with any provision of this Agreement, for such Remote Collocation Space..

4.4.1 Upon termination of occupancy, Neutral Tandem, at its sole expense, shall remove its equipment and other property from the Remote Collocation Space. Neutral Tandem shall have thirty (30) days from the BFFO date ("Termination Date") to complete such removal, including the removal of all equipment and facilities of Neutral Tandem's Guest(s), unless Neutral Tandem's Guest(s) has assumed responsibility for the Remote Collocation Space housing the Guest(s)'s equipment and executed the appropriate documentation required by BellSouth to transfer the Remote Collocation Space to the Guest(s) prior to Neutral Tandem's Termination Date.

4.4.2 Neutral Tandem shall continue payment of all monthly recurring charges to BellSouth until the date Neutral Tandem, and if applicable Neutral Tandem's Guest(s), has fully vacated the Remote Collocation Space and the Space Relinquish Form has been accepted by BellSouth. If Neutral Tandem or Neutral Tandem's Guest(s) fails to vacate the Remote Collocation Space within thirty (30) days from the Termination Date, BellSouth shall have the right to remove and dispose of the equipment and any other property of Neutral Tandem or Neutral Tandem's Guest(s), in any manner that BellSouth deems fit, at Neutral Tandem's expense and with no liability whatsoever for Neutral Tandem's property or Neutral Tandem's Guest(s)'s property.

4.4.3 Upon termination of Neutral Tandem's right to occupy Remote Collocation Space, the Remote Collocation Space will revert back to BellSouth, and Neutral Tandem shall surrender such Remote Collocation Space to BellSouth in the same condition as when it was first occupied by Neutral Tandem, with the exception of ordinary wear and tear, unless otherwise agreed to by the Parties. For CEVs and huts, Neutral Tandem's BellSouth Certified Supplier shall be responsible for updating and making any necessary changes to BellSouth's records as required by BellSouth specifications including, but not limited to, Record Drawings and ERMA Records. Neutral Tandem shall be responsible for the cost of removing any Neutral Tandem constructed enclosure, as well as any support structures (e.g., racking, conduits, power cables, etc.), by the Termination Date and restoring the grounds to their original condition.

5. Use of Remote Collocation Space

5.1 Equipment Type. BellSouth permits the collocation and use of any type of equipment that is necessary and will be used primarily for interconnection to BellSouth's network or for access to UNEs in the provision of telecommunications services, as the term

"necessary" is defined by FCC 47 C.F.R. Section 51.323 (b). Equipment is necessary for interconnection if an inability to deploy that equipment would, as a practical, economical, or operational matter, preclude the requesting carrier from obtaining interconnection with BellSouth at a level equal in quality to that which BellSouth obtains within its own network or what BellSouth provides to any affiliate, subsidiary, or other party.

5.1.1 Examples of equipment that would not be considered necessary include but are not limited to: traditional circuit switching equipment, equipment used exclusively for call-related databases, computer servers used exclusively for providing information services, operations support system (OSS) equipment used to support collocated telecommunications carrier network operations, equipment that generates customer orders, manages trouble tickets or inventory, or stores customer records in centralized databases, etc. BellSouth will determine upon receipt of an application if the requested equipment is necessary based on the criteria established by the FCC. Multifunctional equipment placed on BellSouth's Premises must not place any greater relative burden on BellSouth's property than comparable single-function equipment. BellSouth reserves the right to permit collocation of any equipment on a nondiscriminatory basis.

5.1.2 Such equipment must, at a minimum, meet the following Telcordia Network Equipment Building Systems (NEBS) General Equipment Requirements: Criteria Level 3 requirements as outlined in the Telcordia Special Report SR-3580, Issue 1. Except where otherwise required by a Commission, BellSouth shall comply with the applicable FCC rules relating to denial of collocation equipment based on Neutral Tandem's failure to comply with this Section.

5.1.2.1 All Neutral Tandem equipment installation shall comply with BellSouth TR 73503-11h, "Grounding - Engineering Procedures". Metallic cable sheaths and metallic strength members of optical fiber cables as well as the metallic cable sheaths of all copper conductor cables shall be bonded to the designated grounding bus for the Remote Site Location. All copper conductor pairs, working and non-working, shall be equipped with a solid-state protector unit (over-voltage protection only), which has been listed by a nationally recognized testing laboratory.

5.1.3 Neutral Tandem shall identify to BellSouth whenever Neutral Tandem submits a Method of Procedure ("MOP") adding equipment to Neutral Tandem's Remote Collocation Space all UCC-1 lien holders or other entities that have a financial interest, secured or otherwise, in the equipment in Neutral Tandem's Remote Collocation Space. Neutral Tandem shall submit a copy of the list of any lien holders or other entities that have a financial interest to Neutral Tandem's ATCC Representative.

5.2 <u>No Marketing.</u> Neutral Tandem shall not use the Remote Collocation Space for marketing purposes nor shall it place any identifying signs or markings in the area

surrounding the Remote Collocation Space or on the grounds of the Remote Site Location.

5.3 Equipment Identification. Neutral Tandem shall place a plaque or affix other identification (e.g., stenciling or labeling) to each piece of Neutral Tandem's equipment, including the appropriate emergency contacts with their corresponding telephone numbers, in order for BellSouth to properly identify Neutral Tandem's equipment in the case of an emergency. For caged Remote Collocation Space, such identification must be placed on a plaque affixed to the outside of the caged enclosure.

5.4 Entrance Facilities. Neutral Tandem may elect to place Neutral Tandem-owned or Neutral Tandem-leased fiber entrance facilities into the Remote Collocation Space. BellSouth will designate the point of interconnection at the Remote Site Location housing the Remote Collocation Space, which is physically accessible by both Parties. Neutral Tandem will provide and place copper cable through conduit from the Remote Collocation Space to the feeder distribution interface to the splice location of sufficient length for splicing by BellSouth. Neutral Tandem must contact BellSouth for authorization and instruction prior to placing any entrance facility cable. Neutral Tandem is responsible for maintenance of the entrance facilities that terminate into Neutral Tandem's Remote Collocation Space.

5.5 Shared Use. Neutral Tandem may utilize spare capacity on an existing telecommunications carrier's entrance facility for the purpose of obtaining an entrance facility to Neutral Tandem's Remote Collocation Space within the same BellSouth Remote Site Location.

5.6 Demarcation Point. BellSouth will designate the point(s) of demarcation between Neutral Tandem's equipment and/or network facilities and BellSouth's network facilities. Each Party will be responsible for maintenance and operation of all equipment/facilities on its side of the demarcation point. Neutral Tandem or its agent must perform all required maintenance to Neutral Tandem equipment/facilities on its side of the demarcation point, pursuant to Section 5.7, following.

5.7 Equipment and Facilities. Neutral Tandem, or if required by this Attachment, Neutral Tandem's BellSouth Certified Supplier, is solely responsible for the design, engineering, installation, testing, provisioning, performance, monitoring, maintenance and repair of the equipment and network facilities used by Neutral Tandem which must be performed in compliance with all applicable BellSouth specifications. Such equipment and network facilities may include but are not limited to cable(s), equipment, and point of termination connections. Neutral Tandem and its selected BellSouth Certified Supplier must follow and comply with all BellSouth specifications outlined in the following BellSouthTechnical Requirements: TR 73503, TR 73519, TR 73572, and TR 73564.

5.8 BellSouth Access. From time to time BellSouth may require access to the Remote Collocation Space. BellSouth retains the right to access the Remote Collocation Space for the purpose of making BellSouth equipment and Remote Site Location modifications. Except in case of emergency, BellSouth will give notice to Neutral Tandem at least forty-eight (48) hours before access to the Remote Collocation Space is required. Neutral Tandem may elect to be present whenever BellSouth performs work in the Remote Collocation Space. The Parties agree that Neutral Tandem will not bear any of the expense associated with this work. In the case of an emergency, BellSouth will provide oral notice of entry as soon as possible and, upon request, will provide subsequent written notice.

5.9 Customer Access. Pursuant to Section 12, Neutral Tandem shall have access to its Remote Collocation Space twenty-four (24) hours a day, seven (7) days a week. Neutral Tandem agrees to provide the name and social security number, date of birth, or driver's license number of each employee, supplier, or agent of Neutral Tandem or Neutral Tandem's Guest(s) with Neutral Tandem's written request for access keys or cards (Access Devices) for specific BellSouth Premises, prior to the issuance of said Access Devices, using Form RF-2906-C, the "CLEC and CLEC Certified Supplier Access Request and Acknowledgement" form. The appropriate key acknowledgement forms (the "Collocation Acknowledgement Sheet" for access cards and the "Key Acknowledgement Form" for keys) must be signed by Neutral Tandem and returned to BellSouth Access Management within fifteen (15) days of Neutral Tandem's receipt of these forms. Failure to return these properly acknowledged forms will result in the subsequent access key or card requests being held by BellSouth until the proper acknowledgement documents have been received by BellSouth and reflect current information. Access Devices may not be duplicated under any circumstances. Neutral Tandem agrees to be responsible for all Access Devices and for the return of all Access Devices in the possession of Neutral Tandem's employees, suppliers, agents, or Guests after termination of the employment relationship, the contractual obligation with Neutral Tandem ends, upon the termination of this Agreement, or upon the termination of occupancy of Remote Collocation Space in a specific BellSouth Premises. Neutral Tandem shall pay all applicable charges associated with lost or stolen Access Devices.

5.9.1 BellSouth will permit one (1) accompanied site visit, which will be limited to no more than one hour, to Neutral Tandem's designated Remote Collocation Space, after receipt of the BFFO, without charge to Neutral Tandem. Neutral Tandem must submit to BellSouth the completed Access Control Request Form for all employees, suppliers, agents or Guests requiring access to a BellSouth Premises at least thirty (30) days prior to the date Neutral Tandem desires to gain access to the Remote Collocation Space. In order to permit reasonable access during construction of the Remote Collocation Space, Neutral Tandem may submit a request for its one (1) free accompanied site visit to its designated Remote Collocation Space at any time subsequent to BellSouth's receipt of the BFFO. In the event Neutral Tandem desires access to its designated Remote Collocation Space after the first accompanied free

visit and Neutral Tandem's access request form(s) has not been approved by BellSouth or Neutral Tandem has not yet submitted an access request form to BellSouth, Neutral Tandem shall be permitted to access the Remote Collocation Space accompanied by a BellSouth security escort, at Neutral Tandem's expense, which will be assessed pursuant to the Security Escort fees contained in Exhibit B. Neutral Tandem must request that escorted access be provided by BellSouth to Neutral Tandem's designated Remote Collocation Space at least three (3) business days prior to the date such access is desired. A BellSouth security escort will be required whenever Neutral Tandem or its approved agent or supplier requires access to the entrance manhole.

5.10 Lost or Stolen Access Keys. Neutral Tandem shall notify BellSouth in writing immediately in the case of lost or stolen Access Keys. Should it become necessary for BellSouth to re-key Remote Site Locations or deactivate a card as a result of a lost Access Key(s) or for failure to return an Access Key(s), Neutral Tandem shall pay for all reasonable costs associated with the re-keying or deactivating the device(s).

5.11 Interference or Impairment. Notwithstanding any other provisions of this Attachment, Neutral Tandem shall not use any product or service provided under this Agreement, any other service related thereto or used in combination therewith, or place or use any equipment and facilities in any manner that 1) significantly degrades, interferes with or impairs service provided by BellSouth or by any other entity or any person's use of its telecommunications service; 2) endangers or damages the equipment, facilities or other property of BellSouth or of any other entity or person; 3) compromises the privacy of any communications routed through the Remote Site; or 4) creates an unreasonable risk of injury or death to any individual or to the public. If BellSouth reasonably determines that any equipment or facilities of Neutral Tandem violates the provisions of this paragraph, BellSouth shall provide written notice to Neutral Tandem, which shall direct Neutral Tandem to cure the violation within forty-eight (48) hours of Neutral Tandem's receipt of written notice or, if such cure is not feasible, at a minimum, to commence curative measures within twenty-four (24) hours and exercise reasonable diligence to complete such measures as soon as possible thereafter. After receipt of the notice, the Parties agree to consult immediately and, if necessary, to conduct the inspection of the Remote Collocation Space.

5.11.1 Except in the case of the deployment of an advanced service which significantly degrades the performance of other advanced services or traditional voice band services, if Neutral Tandem fails to take cure the violation within forty-eight (48) hours or, if such cure is not possible, to commence curative action within twenty-four (24) hours and exercise reasonable diligence to complete such action as soon as possible, or if the violation is of a character which poses an immediate and substantial threat of damage to property or injury or death to any person, or any other significant degradation, interference or impairment of BellSouth's or another entity's service, then and only in that event, BellSouth may take such action as it deems necessary to eliminate such threat including, without limitation, the interruption of electrical power to Neutral Tandem's equipment and/or facilities. BellSouth will endeavor, but is not

required, to provide notice to Neutral Tandem prior to the taking of such action and BellSouth shall have no liability to Neutral Tandem for any damages arising from such action, except to the extent that such action by BellSouth constitutes willful misconduct.

5.11.2 For purposes of this Section, the term "significantly degrades" shall be defined as an action that noticeably impairs a service from a user's perspective. In the case of the deployment of an advanced service which significantly degrades the performance of other advanced services or traditional voice band services and Neutral Tandem fails to take curative action within forty-eight (48) hours, or such cure is not possible, to commence curative action within twenty-four (24) hours and exercise reasonable diligence to complete such action as soon as possible, BellSouth will establish before the appropriate Commission that the technology deployed is causing the significant degradation. Any claims of network harm presented to Neutral Tandem or, if subsequently necessary, the Commission must be provided by BellSouth with specific and verifiable information. Where BellSouth demonstrates that a certain technology deployed by Neutral Tandem is significantly degrading the performance of other advanced services or traditional voice band services, Neutral Tandem shall discontinue deployment of that technology and migrate its customers to other technologies that will not significantly degrade the performance of such services. Where the only degraded service itself is a known disturber, and the newly deployed technology satisfies at least one of the criteria for a presumption that it is acceptable for deployment, pursuant to 47CFR, Section 51.230 of the FCC's Rules, the degraded service shall not prevail against the newly-deployed technology.

5.12 Personalty and Its Removal. Facilities and equipment placed by Neutral Tandem in the Remote Collocation Space shall not become a part of the Remote Site Location, even if nailed, screwed or otherwise fastened to the Remote Collocation Space but shall retain their status as personal property and may be removed by Neutral Tandem at any time. Any damage caused to the Remote Collocation Space by Neutral Tandem's employees, suppliers, agents or Guests during the installation or removal of such property shall be promptly repaired by Neutral Tandem at its sole expense.

5.13 Alterations. Under no condition shall Neutral Tandem or any person acting on behalf of Neutral Tandem make any rearrangement, modification, augment, improvement, addition, and/or other alteration which could affect in any way space, power, HVAC, and/or safety considerations to the Remote Collocation Space or the BellSouth Remote Site Location, hereinafter referred to individually or collectively as "Alterations", without the express written consent of BellSouth, which shall not be unreasonably withheld. The cost of any such Alteration shall be paid by Neutral Tandem. An Alteration shall require the submission of an application and Application Fee. BellSouth will bill the nonrecurring fee on the date that BellSouth provides Neutral Tandem with an Application Response.

5.14 Upkeep of Remote Collocation Space. Neutral Tandem shall be responsible for the general upkeep and cleaning of the Remote Collocation Space. Neutral Tandem shall be responsible for removing any of Neutral Tandem's debris from the Remote Collocation Space and from in and around the Remote Site Location on each visit.

6. Ordering and Preparation of Remote Collocation Space

6.1 Procedures and Intervals. Should any state or federal regulatory agency impose procedures or intervals applicable to Neutral Tandem and BellSouth that are different from procedures or intervals set forth in this Section, whether now in effect or that become effective after execution of this Attachment, those procedures or intervals shall supersede the requirements set forth herein for that jurisdiction for all applications submitted after the effective date thereof.

6.2 Remote Site Application. When Neutral Tandem or Neutral Tandem's Guest(s) desires to install a bay in a Remote Site Location, Neutral Tandem shall input a BellSouth Physical Expanded Interconnection Application Document ("Application") directly into BellSouth's electronic application (e.App) system for processing. The Application is considered Bona Fide when it is complete and accurate, meaning that all of the required fields on the Application are completed with the appropriate type of information. An Application Fee, as set forth in Exhibit B, will apply to each Application submitted by Neutral Tandem and will be billed on the date BellSouth provides Neutral Tandem with an Application Response. The placement of an additional bay at a later date will be treated in the same fashion and an Application will be required. The installation of additional shelves/equipment, subject to the restrictions contained in Section 5.7, within an existing bay, does not require an Application.

6.3 Availability of Space. Upon submission of an Application, BellSouth will permit Neutral Tandem to physically collocate, pursuant to the terms of this Attachment, at any BellSouth Remote Site Location, unless BellSouth has determined that there is no space available due to space limitations or that collocation at the Remote Site Location is not practical for technical reasons. In the event space is not immediately available at a Remote Site Location, BellSouth reserves the right to make additional space available, in which case the conditions in Section 7 shall apply, or BellSouth may elect to deny space in accordance with this Section, in which case, virtual or adjacent collocation options may be available. If the amount of space requested is not available, BellSouth will notify Neutral Tandem of the amount that is available.

6.4 Space Availability Notification. For all states except Florida and Tennessee, BellSouth will respond to an Application within ten (10) days as to whether space is available or not available within a BellSouth Remote Site Location. . In Florida and Tennessee, BellSouth will respond to an Application within fifteen (15) days as to whether space is available or not available within a BellSouth Premises. BellSouth's e.App system will reflect when Neutral Tandem's Application is Bona Fide. If the Application cannot be Bona Fide, BellSouth will identify what revisions are necessary for the Application

to become Bona Fide. If the amount of space requested is not available, BellSouth will notify Neutral Tandem of the amount of space that is available and no Application fee will apply. When BellSouth's response includes an amount of space less than that requested by Neutral Tandem or space that is configured differently, no Application Fee shall apply. If Neutral Tandem decides to accept the available space, Neutral Tandem must resubmit its Application to reflect the actual space available, including the configuration of the space, prior to submitting a BFFO. When Neutral Tandem resubmits its Application to accept the available space, BellSouth will bill Neutral Tandem the appropriate Application Fee.

6.5 Denial of Application. If BellSouth notifies Neutral Tandem that no space is available (Denial of Application), BellSouth will not assess an Application Fee to Neutral Tandem. After notifying Neutral Tandem that BellSouth has no available space in the requested Remote Site Location, BellSouth will allow Neutral Tandem, upon request, to tour the Remote Site Location within ten (10) days of such Denial of Application. In order to schedule this tour within ten (10) days, BellSouth must receive the request for the tour of the Remote Site Location within five (5) days of the Denial of Application.

6.6 Petition for Waiver. Upon Denial of Application, BellSouth will timely file a petition with the appropriate Commission pursuant to 47 U.S.C. § 251(c)(6). BellSouth shall provide to the Commission any information requested by that Commission. Such information shall include which space, if any, BellSouth or any of BellSouth's affiliates have reserved for future use and a detailed description of the specific future uses for which the space has been reserved. Subject to an appropriate nondisclosure agreement or provision, BellSouth shall permit Neutral Tandem to inspect any plans or diagrams that BellSouth provides to the Commission.

6.7 Waiting List. On a first-come, first-served basis, which is governed by the date of receipt of an application or Letter of Intent, BellSouth will maintain a waiting list of requesting telecommunications carriers who have either received a Denial of Application or, where it is publicly known that a Remote Site Location is out of space, have submitted a Letter of Intent to collocate in that Remote Site Location. BellSouth will notify the telecommunications carriers on the waiting list that can be accommodated by the amount of space that becomes available according to the position of the telecommunications carriers on said waiting list.

6.7.1 In Florida, on a first-come, first-served basis, which is governed by the date of receipt of an application or Letter of Intent, BellSouth will maintain a waiting list of requesting telecommunications carriers that have either received a Denial of Application or, where it is publicly known that a Remote Site Location is out of space, have submitted a Letter of Intent to collocate in that Remote Site Location. Sixty (60) days prior to Remote Collocation Space becoming available, if known, BellSouth will notify the Commission and the telecommunications carriers on the waiting list by mail when space will become available. If BellSouth does not know sixty (60) days in

advance of when Remote Collocation Space will become available, BellSouth will notify the Commission and the telecommunications carriers on the waiting list within two (2) business days of the determination that space will become available.

6.7.2 When Remote Collocation Space becomes available, Neutral Tandem must submit an updated, complete, and accurate Application to BellSouth within thirty (30) days of such notification that Remote Collocation Space will be available in the requested Remote Site Location previously out of space. If Neutral Tandem has originally requested caged Remote Collocation Space and cageless Remote Collocation Space becomes available, Neutral Tandem may refuse such space and notify BellSouth in writing, within the thirty (3) day timeframe referenced above, that Neutral Tandem wishes to maintain its place on the waiting list for caged Remote Collocation Space, without accepting the available cageless Remote Collocation Space. Neutral Tandem may accept an amount of space less than what it originally requested by submitting an Application as set forth above, and, upon request, may maintain its position on the waiting list for the remaining space that was initially requested. If Neutral Tandem does not submit an Application or notify BellSouth in writing within the thirty (3) day timeframe as described above, BellSouth will offer the available Remote Collocation Space to the next telecommunications carrier on the waiting list and remove Neutral Tandem from the waiting list. Upon request, BellSouth will advise Neutral Tandem as to its position on the waiting list for a particular Remote Site Location.

6.8 Public Notification. BellSouth will maintain on its Interconnection Services website, www.interconnection.bellsouth.com, a notification document that will indicate all Remote Site Locations that are without available space. BellSouth shall update such document within ten (10) days of the date that BellSouth becomes aware that there is insufficient space to accommodate collocation at the Remote Site Location. BellSouth will also post a document on its Interconnection Services website that contains a general notice where space has become available in a Remote Site Location previously on the space exhaust list.

6.9 Application Response.

6.9.1 In Florida and Tennessee, within fifteen (15) days of receipt of a Bona Fide Application, when Remote Collocation Space has been determined to be available or when a lesser amount of space than that requested is available, then with respect to the Remote Collocation Space available, BellSouth will provide an Application Response including sufficient information to enable Neutral Tandem to place a firm order. The Application Response will include, at a minimum, the configuration of the space, the Cable Installation Fee, the Cable Records Fee, and any other applicable space preparation fees, as described in Section 8. When Neutral Tandem submits ten (10) or more Applications within ten (10) days, the initial fifteen (15) day response interval will increase by ten (10) days for every additional ten (10) Applications or fraction thereof.

6.9.2 In Alabama, Georgia, Kentucky, Louisiana, Mississippi, North Carolina, and South Carolina, when Remote Collocation Space has been determined to be available, BellSouth will provide an Application Response within twenty (20) days of receipt of a Bona Fide Application. The Application Response will be a written response that includes sufficient information to enable Neutral Tandem to place a firm order, which, at a minimum, will include the configuration of the space, the Cable Installation Fee, the Cable Records Fee, and any other applicable space preparation fees, as described in Section 8.

6.10 Application Modifications. If a modification or revision is made to any information in the Bona Fide Application prior to a BFFO, with the exception of modifications to (1) Customer Information, (2) Contact Information or (3) Billing Contact Information, whether at the request of Neutral Tandem or as necessitated by technical considerations, the Application shall be considered a new Application and handled as a new Application with respect to the response and provisioning intervals. BellSouth will charge Neutral Tandem the Application Fee as set forth in Exhibit B. BellSouth will bill the nonrecurring fee on the date that BellSouth provides an Application Response.

6.11 Bona Fide Firm Order.

6.11.1 Neutral Tandem shall indicate its intent to proceed with equipment installation in a BellSouth Remote Site Location by submitting a BFFO to BellSouth. The BFFO must be received by BellSouth no later than thirty (30) days after BellSouth's Application Response to Neutral Tandem's Bona Fide Application or Neutral Tandem's Application will expire.

6.11.2 BellSouth will establish a Firm Order date based upon the date BellSouth is in receipt of Neutral Tandem's BFFO. BellSouth will acknowledge the receipt of Neutral Tandem's BFFO within seven (7) days of receipt, so that Neutral Tandem will have positive confirmation that its BFFO has been received. BellSouth's response to a BFFO will include a Firm Order Confirmation, which contains the firm order date. No revisions may be made to a BFFO.

7. Construction and Provisioning

7.1 Construction and Provisioning Intervals.

7.1.1 In Florida and Tennessee, BellSouth will complete construction for Remote Collocation Space as soon as possible within a maximum of ninety (90) days from receipt of a BFFO or as agreed to by the Parties. For Alterations requested to Remote Collocation Space after the initial space has been completed, BellSouth will complete construction for Remote Collocation Space as soon as possible within a maximum of forty-five (45) days from receipt of a BFFO or as agreed to by the Parties, as long as no additional space has been requested by Neutral Tandem, If additional space has been requested by Neutral Tandem, BellSouth will complete construction for the

requested Remote Collocation Space as soon as possible within a maximum of ninety (90) days from receipt of a BFFO for physical Remote Collocation Space and forty five (45) days from receipt of a BFFO for virtual Remote Collocation Space. If BellSouth does not believe that construction will be completed within the relevant provisioning interval and BellSouth and Neutral Tandem cannot agree upon a completion date, within forty-five (45) days of receipt of the BFFO for an initial request, or within thirty (30) days of receipt of the BFFO for an Alteration, BellSouth may seek an extension from the Commission.

7.1.2 In Alabama, Georgia, Kentucky, Louisiana, Mississippi, North Carolina, and South Carolina, BellSouth will complete construction for Remote Collocation Space under ordinary conditions as soon as possible within a maximum of sixty (60) days from receipt of a BFFO and ninety (90) days from receipt of a BFFO for extraordinary conditions, or as agreed to by the Parties. Ordinary conditions are defined as space available with only minor changes required to BellSouth's support systems. (Examples include, but are not limited to: minor modifications to HVAC, cabling and BellSouth's power plant). Extraordinary conditions, include, but may not be limited to: major BellSouth equipment rearrangements or additions; power plant additions or upgrades; major mechanical additions or upgrades; major upgrades for ADA compliance; environmental hazards or hazardous materials abatement; and arrangements for which equipment shipping intervals are extraordinary in length. The Parties may mutually agree to renegotiate an alternative provisioning interval for the Remote Collocation Space requested or BellSouth may seek a waiver from the interval, as set forth above, from the appropriate Commission, if BellSouth does not believe that construction will be completed within the relevant provisioning interval.

7.1.3 If BellSouth does not have space immediately available at a Remote Site Location, BellSouth may elect, but not be limited, to make additional space available by rearranging BellSouth facilities or constructing additional capacity. In such cases, the above intervals shall not apply and BellSouth will provision the Remote Collocation Space in a nondiscriminatory manner and at parity with BellSouth and will provide Neutral Tandem with the estimated completion date in its Application Response.

7.2 Joint Planning. Unless otherwise agreed to by the Parties, a joint planning meeting or other method of joint planning between BellSouth and Neutral Tandem will commence within a maximum of twenty (20) days from BellSouth's receipt of a BFFO. At such meeting, the Parties will agree to the preliminary design of the Remote Collocation Space and the equipment configuration requirements, as reflected in the Application and affirmed in the BFFO.

7.3 Permits. Each Party, its agent(s) or BellSouth Certified Supplier(s) will diligently pursue filing for the permits required for the scope of work to be performed by that Party, its agent(s) or BellSouth Certified Supplier(s) within ten (10) days of the completion of finalized construction designs and specifications.

7.4 Use of BellSouth Certified Supplier. Neutral Tandem shall select a supplier, which has been approved as a BellSouth Certified Supplier to perform all construction, engineering (as specified in TR 73503), installation, and removal work. Neutral Tandem, if a BellSouth Certified Supplier, or Neutral Tandem's BellSouth Certified Supplier must follow and comply with all of BellSouth's specifications and the following BellSouth Technical Requirements: TR 73503, TR 73519, TR 73572, and TR 73564. Unless the BellSouth Certified Supplier has met the requirements for all of the required work activities, Neutral Tandem must use a different BellSouth Certified Supplier for the work activities associated with transmission equipment, switching equipment and power equipment. BellSouth shall provide Neutral Tandem with a list of BellSouth Certified Suppliers, upon request. Neutral Tandem, if a BellSouth Certified Supplier, or Neutral Tandem's BellSouth Certified Supplier(s) shall be responsible for installing Neutral Tandem's equipment and associated components, extending power cabling to the BellSouth power distribution frame, performing operational tests after installation is complete, and notifying BellSouth's equipment engineers and Neutral Tandem upon successful completion of the installation and any associated work. When a BellSouth Certified Supplier is used by Neutral Tandem, the BellSouth Certified Supplier shall bill Neutral Tandem directly for all work performed for Neutral Tandem pursuant to this Attachment. BellSouth shall have no liability for, nor responsibility to pay, such charges imposed by Neutral Tandem's BellSouth Certified Supplier. BellSouth shall make available its supplier certification program to Neutral Tandem or any supplier proposed by Neutral Tandem and will not unreasonably withhold certification. All work performed by or for Neutral Tandem shall conform to generally accepted industry standards.

7.5 Alarms and Monitoring. BellSouth may place alarms in the Remote Site Location for the protection of BellSouth equipment and facilities. Neutral Tandem shall be responsible for the placement, monitoring and removal of environmental and equipment alarms used to service Neutral Tandem's Remote Collocation Space. Upon request, BellSouth will provide Neutral Tandem with applicable BellSouth tariffed service(s) to facilitate remote monitoring of collocated equipment by Neutral Tandem. Both Parties shall use best efforts to notify the other of any verified environmental condition (e.g., temperature extremes or excess humidity) known to that Party.

7.6 Virtual to Physical Remote Collocation Space Relocation. In the event physical Remote Collocation Space was previously denied at a Remote Site Location due to technical reasons or space limitations and physical Remote Collocation Space has subsequently become available, Neutral Tandem may relocate its existing virtual Remote Collocation Space(s) to physical Remote Collocation Space and pay the appropriate fees associated with the rearrangement or reconfiguration of the services being terminated into the virtual Remote Collocation Space. If BellSouth knows when additional physical Remote Collocation Space may become available at the Remote Site Location requested by Neutral Tandem, such information will be provided to Neutral Tandem in BellSouth's written denial of physical Remote Collocation Space. To the extent that (i) physical Remote Collocation Space becomes available to Neutral

Tandem within one hundred eighty (180) days of BellSouth's written denial of Neutral Tandem's request for physical Remote Collocation Space, (ii) BellSouth had knowledge that the Remote Collocation Space was going to become available, and (iii) Neutral Tandem was not informed in the written denial that physical Remote Collocation Space would become available within such one hundred eighty (180) day period, then Neutral Tandem may relocate its virtual Remote Collocation Space to a physical Remote Collocation Space and will receive a credit for any nonrecurring charges previously paid for such virtual Remote Collocation Space. Neutral Tandem must arrange with a BellSouth Certified Supplier for the relocation of equipment from a virtual Remote Collocation Space to a physical Remote Collocation Space and will bear the cost of such relocation, including the costs associated with moving the services from the virtual Remote Collocation Space to the new physical Remote Collocation Space.

7.6.1 In Alabama, BellSouth will complete a relocation of a virtual Remote Collocation Space to a cageless physical Remote Collocation Space within sixty (60) days from BellSouth's receipt of a BFFO and from a virtual Remote Collocation Space to a caged physical Remote Collocation Space within ninety (90) days from BellSouth's receipt of a BFFO.

7.7 Virtual to Physical Conversion (In-Place). Virtual Remote Collocation Space may be converted to "in-place" physical caged Remote Collocation Space if the potential conversion meets all of the following criteria: 1) there is no change in the amount of equipment or the configuration of the equipment that was in the virtual Remote Collocation Space; 2) the conversion of the virtual Remote Collocation Space will not cause the equipment or the results of that conversion to be located in a space that BellSouth has reserved for its own future needs; and 3) any changes to the existing Remote Collocation Space can be accommodated by existing power, HVAC, and other requirements. Unless otherwise specified herein, BellSouth will complete virtual to physical Remote Collocation Space conversions (in-place) within sixty (60) days from receipt of the BFFO. BellSouth will bill Neutral Tandem an Application Fee, as set forth in Exhibit B, on the date BellSouth provides an Application Response to Neutral Tandem.

7.7.1 In Alabama and Tennessee, BellSouth will complete virtual to physical conversions (in-place) within thirty (30) days from receipt of the BFFO as long as the conversion meets all of the criteria specified above in Section 7.7.

7.8 Cancellation. Unless otherwise specified in this Attachment, if at any time prior to Space Acceptance, Neutral Tandem cancels its order for Remote Collocation Space (Cancellation), BellSouth will bill the applicable nonrecurring charge(s) for any and all work processes for which work has begun or been completed. In Florida, if Neutral Tandem cancels its order for Remote Collocation Space at any time prior to the Space Ready Date, no cancellation fee shall be assessed by BellSouth; however, Neutral Tandem will be responsible for reimbursing BellSouth for any costs specifically

incurred by BellSouth on behalf of Neutral Tandem up to the date that the written notice of cancellation was received by BellSouth. In Georgia, if Neutral Tandem cancels its order for Remote Collocation Space at any time prior to Space Acceptance, BellSouth will bill Neutral Tandem for all costs incurred prior to the date of Cancellation and for any costs incurred as a direct result of the Cancellation, not to exceed the total amount that would have been due had the firm order not been cancelled.

7.9 Licenses. Neutral Tandem, at its own expense, will be solely responsible for obtaining from governmental authorities, and any other appropriate agency, entity, or person, all rights, privileges, permits, licenses, and certificates necessary or required to operate as a provider of telecommunications services to the public or to build-out, equip and/or occupy the Remote Collocation Space.

7.10 Environmental Compliance. The Parties agree to utilize and adhere to the Environmental Hazard Guidelines identified in Exhibit A attached hereto.

8. Rates and Charges

8.1 Rates. Neutral Tandem agrees to pay the rates and charges identified in Exhibit B attached hereto.

8.2 Recurring Charges. If Neutral Tandem has met the applicable fifteen (15) day acceptance walkthrough interval specified in Section 4, billing for recurring charges will begin upon the Space Acceptance Date. In the event Neutral Tandem fails to complete an acceptance walkthrough within the applicable fifteen (15) day interval, billing for recurring charges will commence on the Space Ready Date. If Neutral Tandem occupies the space prior to the Space Ready Date, the date Neutral Tandem occupies the space is deemed the Space Acceptance Date and billing for recurring charges will begin on that date. The billing for all applicable monthly recurring charges will begin in Neutral Tandem ‘s next billing cycle and will include any prorated charges for the period from Neutral Tandem’s Space Acceptance Date or Space Ready Date, whichever is appropriate pursuant to Section 4.2, to the date the bill is issued by BellSouth.

8.3 Application Fee. BellSouth shall assess a nonrecurring Application Fee, via a service order, on the date that BellSouth provides an Application Response. BellSouth will bill the appropriate non-recurring Application Fee on the date that BellSouth provides an Application Response to Neutral Tandem.

8.4 Bay Space. The bay space charge recovers the costs associated with air conditioning, ventilation and other allocated expenses for the maintenance of the Remote Site Location, and includes the amperage necessary to power Neutral Tandem’s equipment. Neutral Tandem shall remit bay space charges based upon the number of bays requested. BellSouth will assign Remote Collocation Space in conventional remote site bay lineups where feasible.

8.5 Power. BellSouth shall make available –48 Volt (-48V) Direct Current (DC) power for Neutral Tandem's Remote Collocation Space at a BellSouth Battery Distribution Fuse Bay (BDFB) within the Remote Site Location. The charge for power shall be assessed as part of the recurring charge for bay space, as referenced above in Section 8.4. If the power requirements for Neutral Tandem's equipment exceed the capacity available, then such additional power requirements shall be assessed on an individual case basis. BellSouth will revise Neutral Tandem's recurring power charges to reflect a power upgrade upon notification of the completion of the upgrade by Neutral Tandem's BellSouth Certified Vendor. BellSouth will revise recurring power charges to reflect a power reduction upon BellSouth's receipt of the Power Reduction Form from Neutral Tandem certifying the completion of the power reduction, including the removal of the power cabling by Neutral Tandem's BellSouth Certified Supplier.

8.6 Adjacent Collocation Power. Charges for AC power will be assessed on a per breaker ampere, per month basis. Rates include the provision of commercial and standby AC power, where available. When obtaining power from a BellSouth service panel, protection devices and power cables must be engineered (sized) and installed by Neutral Tandem's BellSouth Certified Supplier, with the exception that BellSouth shall engineer and install the protection devices and power cables for Adjacent Collocation. Neutral Tandem's BellSouth Certified Supplier must provide a copy of the engineering power specifications prior to the equipment becoming operational. Charges for AC power shall be assessed pursuant to the rates specified in Exhibit B. AC power voltage and phase ratings shall be determined on a per location basis. At Neutral Tandem's option, Neutral Tandem may arrange for AC power in an Adjacent Collocation arrangement from a retail provider of electrical power.

8.7 Security Escort. After Neutral Tandem has used its one accompanied site visit, pursuant to Section 5.9.1, and prior to Neutral Tandem's completion of the BellSouth Security Training requirements, contained in Section 12 of this Agreement, a security escort will be required when Neutral Tandem's employees, approved agent, supplier, or Guest(s) desire access to the Remote Site Location The rates for security escort service are assessed pursuant to the fee schedule contained in Exhibit B, beginning with the scheduled escort time agreed to by the Parties. BellSouth will wait for one-half (1/2) hour after the scheduled escort time to provide such requested escort service and Neutral Tandem shall pay for such half-hour charges in the event Neutral Tandem's employees, approved agent, supplier or Guest(s) fails to show up for the scheduled escort appointment.

8.8 Other. If no collocation rate element and associated rate is identified in Exhibit B of this Attachment, the Parties, upon request by either Party, will negotiate the rate for the specific collocation service or function identified in this Attachment.

9. Insurance

9.1 Neutral Tandem shall, at its sole cost and expense, procure, maintain, and keep in force insurance as specified in this Section and underwritten by insurance companies licensed to do business in the states applicable under this Agreement and having a Best's Insurance Rating of A-.

9.2 Neutral Tandem shall maintain the following specific coverage:

9.2.1 Commercial General Liability coverage in the amount of ten million dollars ($10,000,000.00) or a combination of Commercial General Liability and Excess/Umbrella coverage totaling not less than ten million dollars ($10,000,000.00). BellSouth shall be named as an Additional Insured on the Commercial General Liability policy as specified herein.

9.2.2 Statutory Workers Compensation coverage and Employers Liability coverage in the amount of one hundred thousand dollars ($100,000.00) each accident, one hundred thousand dollars ($100,000.00) each employee by disease, and five hundred thousand dollars ($500,000.00) policy limit by disease.

9.2.3 All Risk Property coverage on a full replacement cost basis insuring all of Neutral Tandem's real and personal property situated on or within a BellSouth Premises and BellSouth's Remote Site Locations.

9.2.4 Neutral Tandem may elect to purchase business interruption and contingent business interruption insurance, having been advised that BellSouth assumes no liability for loss of profit or revenues should an interruption of service occur.

9.3 The limits set forth in Section 9.2 above may be increased by BellSouth from time to time during the term of this Agreement upon thirty (30) days notice to Neutral Tandem to at least such minimum limits as shall then be customary with respect to comparable occupancy of BellSouth structures.

9.4 All policies purchased by Neutral Tandem shall be deemed to be primary and not contributing to or in excess of any similar coverage purchased by BellSouth. All insurance must be in effect on or before the date equipment is delivered to a BellSouth Remote Site Location and shall remain in effect for the term of this Agreement or until all of Neutral Tandem's property has been removed from BellSouth's Remote Site Location, whichever period is longer. If Neutral Tandem fails to maintain required coverage, BellSouth may pay the premiums thereon and seek reimbursement of same from Neutral Tandem.

9.5 Neutral Tandem shall submit certificates of insurance reflecting the coverage required pursuant to this Section within a minimum of ten (10) business days prior to the commencement of any work in the Remote Collocation Space. Failure to meet this

interval may result in construction and equipment installation delays. Neutral Tandem shall arrange for BellSouth to receive thirty (30) business days' advance notice of cancellation or non-renewal from Neutral Tandem's insurance company. Neutral Tandem shall forward a certificate of insurance and notice of cancellation/non-renewal to BellSouth at the following address:

BellSouth Telecommunications, Inc.
Attn.: Risk Management Office - Finance
17F54 BellSouth Center
675 W. Peachtree Street
Atlanta, Georgia 30375

9.6 Neutral Tandem must conform to recommendations made by BellSouth's fire insurance company to the extent BellSouth has agreed to, or shall hereafter agree to, such recommendations.

9.7 Self-Insurance. If Neutral Tandem's net worth exceeds five hundred million dollars ($500,000,000.00), Neutral Tandem may elect to request self-insurance status in lieu of obtaining any of the insurance required in Section 9.2. Neutral Tandem shall provide audited financial statements to BellSouth thirty (30) days prior to the commencement of any work in the Remote Collocation Space. BellSouth shall then review such audited financial statements and respond in writing to Neutral Tandem in the event that self-insurance status is not granted to Neutral Tandem. If BellSouth approves Neutral Tandem for self-insurance, Neutral Tandem shall annually furnish to BellSouth, and keep current, evidence of such net worth that is attested to by one of Neutral Tandem's corporate officers. The ability to self-insure shall continue so long as Neutral Tandem meets all of the requirements of this Section. If Neutral Tandem subsequently no longer satisfies the requirements of this Section, Neutral Tandem is required to purchase insurance as indicated by Section 9.2.

9.8 The net worth requirements set forth in Section 9.7 may be increased by BellSouth from time to time during the term of this Agreement upon thirty (30) days' notice to Neutral Tandem to at least such minimum limits as shall then be customary with respect to comparable occupancy of a BellSouth Premises.

9.9 Failure to comply with the provisions of this Section will be deemed a material breach of this Attachment.

10. Mechanics Liens

10.1 If any mechanics lien or other liens are filed against property of either Party (BellSouth or Neutral Tandem), or any improvement thereon by reason of or arising out of any labor or materials furnished or alleged to have been furnished or to be furnished to or for the other Party or by reason of any changes, or additions to said property made at the request or under the direction of the other Party, the other Party directing or requesting those changes shall, within thirty (30) business days after

receipt of written notice from the Party against whose property said lien has been filed, either pay such lien or cause the same to be bonded off the affected property in the manner provided by law. The Party causing said lien to be placed against the property of the other shall also defend, at its sole cost and expense, on behalf of the other, any action, suit or proceeding which may be brought for the enforcement of such liens and shall pay any damage and discharge any judgment entered thereon.

11. Inspections

11.1 BellSouth may conduct an inspection of Neutral Tandem's equipment and facilities in Neutral Tandem's Remote Collocation Space(s) prior to the activation of facilities and/or services between Neutral Tandem's equipment and equipment of BellSouth. BellSouth may conduct an inspection if Neutral Tandem adds equipment and may otherwise conduct routine inspections at reasonable intervals mutually agreed upon by the Parties. BellSouth shall provide Neutral Tandem with a minimum of forty-eight (48) hours or two (2) business days, whichever is greater, advance notice of all such inspections. All costs of such inspections shall be borne by BellSouth.

12. Security and Safety Requirements

12.1 Unless otherwise specified, Neutral Tandem will be required, at its own expense, to conduct a statewide investigation of criminal history records for each Neutral Tandem employee hired in the past five years being considered for work on a BellSouth Remote Site Location, for the states/counties where the Neutral Tandem employee has worked and lived for the past five years. Where state law does not permit statewide collection or reporting, an investigation of the applicable counties is acceptable. Neutral Tandem shall not be required to perform this investigation if an affiliated company of Neutral Tandem has performed an investigation of the Neutral Tandem employee seeking access, if such investigation meets the criteria set forth above. This requirement will not apply if Neutral Tandem has performed a pre-employment statewide investigation of criminal history records of the Neutral Tandem employee for the states/counties where the Neutral Tandem employee has worked and lived for the past five years or, where state law does not permit a statewide investigation, an investigation of the applicable counties.

12.2 Neutral Tandem will be required to administer to its personnel assigned to the BellSouth Premises security training either provided by BellSouth, or meeting criteria defined by BellSouth at www.interconnection.bellsouth.com/guides.

12.3 Neutral Tandem shall provide its employees and agents with picture identification, which must be worn, and visible at all times while in Neutral Tandem's Remote Collocation Space or other areas in or around the Remote Site Location. The photo Identification card shall bear, at a minimum, the employee's name and photo, and Neutral Tandem's name. BellSouth reserves the right to remove from its Remote Site Location any employee of Neutral Tandem not possessing identification issued by Neutral Tandem or who have violated any of BellSouth's policies as outlined in the

CLEC Security Training documents. Neutral Tandem shall hold BellSouth harmless for any damages resulting from such removal of Neutral Tandem's personnel from BellSouth Remote Site Location. Neutral Tandem shall be solely responsible for ensuring that any Guest(s) of Neutral Tandem is in compliance with all subsections of this Section.

12.4 Neutral Tandem shall not assign to the BellSouth Remote Site Location any personnel with records of felony criminal convictions. Neutral Tandem shall not assign to the BellSouth Remote Site Location any personnel with records of misdemeanor convictions, except for misdemeanor traffic violations, without advising BellSouth of the nature and gravity of the offense(s). BellSouth reserves the right to refuse access to any of Neutral Tandem's personnel who have been identified to have misdemeanor criminal convictions. Notwithstanding the foregoing, in the event Neutral Tandem chooses not to advise BellSouth of the nature and gravity of any misdemeanor conviction, Neutral Tandem may, in the alternative, certify to BellSouth that it shall not assign to the BellSouth Remote Site Location any personnel with records of misdemeanor convictions (other than misdemeanor traffic violations).

12.4.1 Neutral Tandem shall not knowingly assign to the BellSouth Remote Site Location any individual who was a former employee of BellSouth and whose employment with BellSouth was terminated for a criminal offense whether or not BellSouth sought prosecution of the individual for the criminal offense.

12.4.2 Neutral Tandem shall not knowingly assign to the BellSouth Remote Site Location any individual who was a former supplier of BellSouth and whose access to a BellSouth Remote Site Location was revoked due to the commission of a criminal offense, whether or not BellSouth sought prosecution of the individual for the criminal offense.

12.5 For each Neutral Tandem employee or agent hired by Neutral Tandem within five years prior to being considered for work on the BellSouth Premises or BellSouth's Remote Site Locations, who requires access to a BellSouth Remote Site Location to perform work in Neutral Tandem's Remote Collocation Space(s), Neutral Tandem shall furnish BellSouth, a certification that the aforementioned background check and security training were completed. This certification must be provided to and approved by BellSouth before an employee or agent will be granted such access to a BellSouth Premises. The certification will contain a statement that no felony convictions were found and certifying that the employee completed the security training. If the employee's criminal history includes misdemeanor convictions, Neutral Tandem will disclose the nature of the convictions to BellSouth at that time. In the alternative, Neutral Tandem may certify to BellSouth that it shall not assign to the BellSouth Remote Site Location any personnel with records of misdemeanor convictions, other than misdemeanor traffic violations.

12.5.1 For all other Neutral Tandem employees requiring access to a BellSouth Remote Site Location pursuant to this Attachment, Neutral Tandem shall furnish BellSouth, prior

to an employee gaining such access, a certification that the employee is not subject to the requirements of Section 12.5 above and that security training was completed by the employee.

12.6 At BellSouth's request, Neutral Tandem shall promptly remove from the BellSouth Remote Site Location any employee of Neutral Tandem that BellSouth does not wish to grant access to a Remote Site Location: 1) pursuant to any investigation conducted by BellSouth, or 2) prior to the initiation of an investigation if an employee of Neutral Tandem is found interfering with the property or personnel of BellSouth or another collocated telecommunications carrier, provided that an investigation shall be promptly commenced by BellSouth.

12.7 Security Violations. BellSouth reserves the right to interview Neutral Tandem's employees, agents, suppliers, or Guests in the event of wrongdoing in or around a BellSouth Premises or Remote Site Location or involving BellSouth's or another collocated telecommunications carrier's property or personnel, provided that BellSouth shall provide reasonable notice to Neutral Tandem's Security representative of such interview. Neutral Tandem and its employees, agents, suppliers, or Guests shall reasonably cooperate with BellSouth's investigation into allegations of wrongdoing or criminal conduct committed by, witnessed by, or involving Neutral Tandem's employees, agents, suppliers, or Guests. Additionally, BellSouth reserves the right to bill Neutral Tandem for all reasonable costs associated with investigations involving its employees, agents, or suppliers, or Guests if it is established and mutually agreed in good faith that Neutral Tandem's employees, agents, suppliers, or Guests are responsible for the alleged act(s). BellSouth shall bill Neutral Tandem for BellSouth property, which is stolen or damaged, where an investigation determines the culpability of Neutral Tandem's employees, agents, suppliers, or Guests and where Neutral Tandem agrees, in good faith, with the results of such investigation. Neutral Tandem shall notify BellSouth in writing immediately in the event that Neutral Tandem discovers one of its employees, agents, suppliers, or Guests already working on the BellSouth Remote Site Location is a possible security risk. Upon request of the other Party, the Party who is the employer shall discipline consistent with its employment practices, up to and including removal from a BellSouth Premises or Remote Site Location, any employee found to have violated the security and safety requirements of this Section. Neutral Tandem shall hold BellSouth harmless for any damages resulting from such removal of Neutral Tandem's personnel from a BellSouth Premises.

12.8 Use of Supplies. Unauthorized use of telecommunications equipment or supplies by either Party, whether or not used routinely to provide telephone service (e.g. plug-in cards,) will be strictly prohibited and handled appropriately. Costs associated with such unauthorized use may be charged to the offending Party, as may be all associated investigative costs.

12.9 Use of Official Lines. Except for non-toll calls necessary in the performance of their work, neither Party shall use the telephone(s) of the other Party on the BellSouth

Remote Site Location. Charges for unauthorized telephone calls may be charged to the offending Party, as may be all associated investigative costs.

12.10 Accountability. Full compliance with the Security requirements of this Section shall in no way limit the accountability of either Party to the other for the improper actions of its employees, agents, suppliers, or Guests.

13. Destruction of Remote Collocation Space

13.1 In the event a Remote Collocation Space is wholly or partially damaged by fire, windstorm, hurricane, tornado, flood or by similar Acts of God or force majeure circumstances beyond a Party's reasonable control to such an extent as to be rendered wholly unsuitable for Neutral Tandem's permitted use hereunder, then either Party may elect within ten (10) days after such damage, to terminate this Attachment with respect to the affected Remote Collocation Space, and if either Party shall so elect, by giving the other written notice of termination, both Parties shall stand released of and from further liability under the terms hereof with respect to such Remote Collocation Space. If the Remote Collocation Space shall suffer only minor damage and shall not be rendered wholly unsuitable for Neutral Tandem's permitted use, or is damaged and the option to terminate is not exercised by either Party, BellSouth covenants and agrees to proceed promptly without expense to Neutral Tandem, except for improvements not to the property of BellSouth, to repair the damage. BellSouth shall have a reasonable time within which to rebuild or make any repairs, and such rebuilding and repairing shall be subject to delays caused by storms, shortages of labor and materials, government regulations, strikes, walkouts, and causes beyond the control of BellSouth, which causes shall not be construed as limiting factors, but as exemplary only. Neutral Tandem may, at its own expense, accelerate the rebuild of its Remote Collocation Space and equipment provided, however, that a BellSouth Certified Supplier is used and the necessary space preparation has been completed. A BellSouth Certified Vendor must perform a rebuild of equipment. If Neutral Tandem's acceleration of the project increases the cost of the project, then those additional charges will be incurred at Neutral Tandem's expense. Where allowed and where practical, Neutral Tandem may erect a temporary facility while BellSouth rebuilds or makes repairs. In all cases where the Remote Collocation Space shall be rebuilt or repaired, Neutral Tandem shall be entitled to an equitable abatement of rent and other charges, depending upon the unsuitability of the Remote Collocation Space for Neutral Tandem's permitted use, until such Remote Collocation Space is fully repaired and restored and Neutral Tandem's equipment installed therein (but in no event later than thirty (30) days after the Remote Collocation Space is fully repaired and restored). Where Neutral Tandem has placed a Remote Site Adjacent Arrangement pursuant to Section 3.4, Neutral Tandem shall have the sole responsibility to repair or replace said Remote Site Adjacent Arrangement provided herein. Pursuant to this Section, BellSouth will restore the associated services to the Remote Site Adjacent Arrangement.

14. Eminent Domain

14.1 If the whole of a Remote Collocation Space or Remote Site Adjacent Arrangement shall be taken by any public authority under the power of eminent domain, then this Attachment shall terminate with respect to such Remote Collocation Space or Remote Site Adjacent Arrangement as of the date possession shall be taken by such public authority and rent and other charges for the Remote Collocation Space or Remote Site Adjacent Arrangement shall be paid up to that day with a proportionate refund by BellSouth of such rent and charges as may have been paid in advance for a period subsequent to the date of the taking. If any part of the Remote Collocation Space or Remote Site Adjacent Arrangement shall be taken under eminent domain, BellSouth and Neutral Tandem shall each have the right to terminate this Attachment with respect to such Remote Collocation Space or Remote Site Adjacent Arrangement and declare the same null and void, by written notice of such intention to the other Party within ten (10) days after such taking.

15. Nonexclusivity

15.1 Neutral Tandem understands that this Attachment is not exclusive and that BellSouth may enter into similar agreements with other Parties. Assignment of Remote Collocation Space pursuant to all such agreements shall be determined by space availability and made on a first come, first served basis.

ENVIRONMENTAL AND SAFETY PRINCIPLES

The following principles provide basic guidance on environmental and safety issues when applying for and establishing physical collocation arrangements.

1. GENERAL PRINCIPLES

1.1 Compliance with Applicable Law. BellSouth and Neutral Tandem agree to comply with applicable federal, state, and local environmental and safety laws and regulations including U.S. Environmental Protection Agency (USEPA) regulations issued under the Clean Air Act (CAA), Clean Water Act (CWA), Resource Conservation and Recovery Act (RCRA), Comprehensive Environmental Response, Compensation and Liability Act (CERCLA), Superfund Amendments and Reauthorization Act (SARA), the Toxic Substances Control Act (TSCA), and OSHA regulations issued under the Occupational Safety and Health Act of 1970, as amended, and National Fire Protection Association (NFPA) NEC and National Electric Safety Codes (NESC) ("Applicable Laws") requirements. . Each Party shall notify the other if compliance inspections are conducted by regulatory agencies and/or citations are issued that relate to any aspect of this Attachment.

1.2 Notice. BellSouth and Neutral Tandem shall provide notice to the other, including any Material Safety Data Sheets (MSDSs), of known and recognized physical hazards or Hazardous Chemicals existing on site or brought on site. A Hazardous Chemical inventory list is posted on an OSHA Poster and updated annually at each Central Office. This Poster is normally located near the front entrance of the building or in the lounge area. Each Party is required to provide specific notice for known potential Imminent Danger conditions. Neutral Tandem should contact 1-800-743-6737 for any BellSouth MSDS required.

1.3 Practices/Procedures. BellSouth may make available additional environmental control procedures for Neutral Tandem to follow when working at a BellSouth Remote Site Location (See Section 2, below). These practices/procedures will represent the regular work practices required to be followed by the employees and suppliers of BellSouth for environmental protection. Neutral Tandem will require its suppliers, agents, Guests and others accessing the BellSouth Remote Site Location to comply with these practices. Section 2 lists the Environmental categories where BST practices should be followed by Neutral Tandem when operating in the BellSouth Remote Site Location.

1.4 Environmental and Safety Inspections. BellSouth reserves the right to inspect Neutral Tandem's Remote Collocation Space with proper notification. BellSouth reserves the right to stop any Neutral Tandem work operation that imposes Imminent Danger to the environment, employees or other persons in or around a Remote Site Location.

1.5 Hazardous Materials Brought On Site. Any hazardous materials brought into, used, stored or abandoned a BellSouth Remote Site Location by Neutral Tandem are owned by and considered the property of Neutral Tandem. Neutral Tandem will indemnify BellSouth for claims, lawsuits or damages to persons or property caused by these materials. Without prior written BellSouth approval, no substantial new safety or environmental hazards can be created by Neutral Tandem or different

hazardous materials used by Neutral Tandem at the BellSouth Remote Site Location. Neutral Tandem must demonstrate adequate emergency response capabilities for the materials used by Neutral Tandem or remaining at a BellSouth Remote Site Location.

1.6 Spills and Releases. When contamination is discovered at a BellSouth Remote Site Location, either Party discovering the condition must notify the other Party. All Spills or Releases of regulated materials will immediately be reported by Neutral Tandem to BellSouth.

1.7 Coordinated Environmental Plans and Permits. BellSouth and Neutral Tandem will coordinate plans, permits or information required to be submitted to government agencies, such as emergency response plans, spill prevention control and countermeasures (SPCC) plans and community reporting. If fees are associated with filing, BellSouth and Neutral Tandem will develop a cost sharing procedure. If BellSouth's permit or EPA identification number must be used, Neutral Tandem must comply with all of BellSouth's permit conditions and environmental processes, including environmental "best management practices (BMP)" (see Section 2, below) and the selection of BST disposition vendors and disposal sites.

1.8 Environmental and Safety Indemnification. BellSouth and Neutral Tandem shall indemnify, defend and hold harmless the other Party from and against any claims (including, without limitation, third-party claims for personal injury or death or real or personal property damage), judgments, damages, (including direct and indirect damages, and punitive damages), penalties, fines, forfeitures, costs, liabilities, interest and losses arising in connection with the violation or alleged violation of any Applicable Law or contractual obligation or the presence or alleged presence of contamination arising out of the acts or omissions of the indemnifying Party, its employees, agents, suppliers, or Guests concerning its operations at a Remote Site Location.

2. CATEGORIES FOR CONSIDERATION OF ENVIRONMENTAL ISSUES

2.1 When performing functions that fall under the following Environmental categories on BellSouth's Remote Site Location, Neutral Tandem agrees to comply with the applicable sections of the current issue of BellSouth's Environmental and Safety Methods and Procedures (M&Ps), incorporated herein by this reference. Neutral Tandem further agrees to cooperate with BellSouth to ensure that Neutral Tandem's employees, agents, suppliers and/or Guests are knowledgeable of and satisfy those provisions of BellSouth's Environmental M&Ps which apply to the specific Environmental function being performed by Neutral Tandem, its employees, agents ,suppliers and/or Guests.

2.1.1 The most current version of reference documentation must be requested from Neutral Tandem's BellSouth Regional Contract Manager (RCM).

ENVIRONMENTAL CATEGORIES	ENVIRONMENTAL ISSUES	ADDRESSED BY THE FOLLOWING DOCUMENTATION
Disposal of hazardous material or other regulated material (e.g., batteries, fluorescent	Compliance with all applicable local, state, & federal laws and	• Std T&C 450

tubes, solvents & cleaning materials)	regulations Pollution liability insurance EVET approval of supplier	• Fact Sheet Series 17000 • Std T&C 660-3 • Approved Environmental Vendor List (Contact ATCC Representative)
Emergency response	Hazmat/waste release/spill fire safety emergency	• Fact Sheet Series 1700 • Building Emergency Operations Plan (EOP) (specific to and located on Remote Site Location)
Contract labor/outsourcing for services with environmental implications to be performed on BellSouth Remote Site Location (e.g., disposition of hazardous material/waste; maintenance of storage tanks)	Compliance with all applicable local, state, & federal laws and regulations Performance of services in accordance with BST's environmental M&Ps InsuranceNeutral Tandem	• Std T&C 450 • Std T&C 450-B • (Contact ATCC Representative for copy of appropriate E/S M&Ps.) • Std T&C 660
Transportation of hazardous material	Compliance with all applicable local, state, & federal laws and regulations Pollution liability insurance EVET approval of supplier	• Std T&C 450 • Fact Sheet Series 17000 • Std T&C 660-3 • Approved Environmental Vendor List (Contact ATCC Representative)
Maintenance/operations work which may produce a waste Other maintenance work	Compliance with all applicable local, state, & federal laws and regulations Protection of BST employees and equipment	• Std T&C 450 • 29CFR 1910.147 (OSHA Standard) • 29CFR 1910 Subpart O (OSHA Standard)
Janitorial services	All waste removal and disposal must conform to all applicable federal, state and local regulations	• –Procurement Manager (CRES Related Matters)-BST Supply Chain Services

	All Hazardous Material and Waste Asbestos notification and protection of employees and equipment	• Fact Sheet Series 17000 • GU-BTEN-001BT, Chapter 3 • BSP 010-170-001BS (Hazcom)
Manhole cleaning	Compliance with all applicable local, state, & federal laws and regulations Pollution liability insurance EVET approval of supplier	• Std T&C 450 • Fact Sheet 14050 • BSP 620-145-011PR Issue A, August 1996 • Std T&C 660-3 • Approved Environmental Vendor List (Contact ATCC Representative)
Removing or disturbing building materials that may contain asbestos	Asbestos work practices	• GU-BTEN-001BT, Chapter 3 For questions regarding removing or disturbing materials that contain asbestos, call the BellSouth Building Service Center: AL, MS, TN, KY & LA (local area code) 557-6194 FL, GA, NC & SC (local area code) 780-2740

3. DEFINITIONS

Generator. Under RCRA, the person whose act produces a Hazardous Waste, as defined in 40 CFR 261, or whose act first causes a Hazardous Waste to become subject to regulation. The Generator is legally responsible for the proper management and disposal of Hazardous Wastes in accordance with regulations.

Hazardous Chemical. As defined in the U.S. Occupational Safety and Health (OSHA) hazard communication standard (29 CFR 1910.1200), any chemical which is a health hazard or physical hazard.

Hazardous Waste. As defined in section 1004 of RCRA.

Imminent Danger. Any conditions or practices at a remote site location which are such that a danger exists which could reasonably be expected to cause immediate death or serious harm to people or immediate significant damage to the environment or natural resources.

Spill or Release. As defined in Section 101 of CERCLA.

4. ACRONYMS

ATCC – Account Team Collocation Coordinator

BST – BellSouth Telecommunications

CRES – Corporate Real Estate and Services (formerly PS&M)

DEC/LDEC - Department Environmental Coordinator/Local Department Environmental Coordinator

E/S – Environmental/Safety

EVET - Environmental Vendor Evaluation Team

GU-BTEN-001BT - BellSouth Environmental Methods and Procedures

NESC - National Electrical Safety Codes

P&SM - Property & Services Management

Std T&C - Standard Terms & Conditions

COLLOCATION - Florida														Attachment: 4		Exhibit: B	
CATEGORY		RATE ELEMENTS	Interim	Zone	BCS	USOC	RATES($)					Svc Order Submitted Elec per LSR	Svc Order Submitted Manually per LSR	Incremental Charge - Manual Svc Order vs. Electronic-1st	Incremental Charge - Manual Svc Order vs. Electronic-Add'l	Incremental Charge - Manual Svc Order vs. Electronic-Disc 1st	Incremental Charge - Manual Svc Order vs. Electronic-Disc Add'l
							Rec	Nonrecurring		Nonrecurring Disconnect		OSS Rates($)					
								First	Add'l	First	Add'l	SOMEC	SOMAN	SOMAN	SOMAN	SOMAN	SOMAN
PHYSICAL COLLOCATION																	
	Application																
		Physical Collocation - Initial Application Fee			CLO	PE1BA		2,785.00		1.20							
		Physical Collocation - Subsequent Application Fee			CLO	PE1CA		2,236.00		1.20							
		Physical Collocation - Co-Carrier Cross Connects/Direct Connect, Application Fee, per application			CLO	PE1DT		564.81									
		Physical Collocation - Power Reconfiguration Only, Application Fee			CLO	PE1PR		409.50									
		Physical Collocation Administrative Only - Application Fee			CLO	PE1BL		760.91		1.20							
	Space Preparation																
		Physical Collocation - Floor Space, per sq feet			CLO	PE1PJ	5.28										
		Physical Collocation - Space Enclosure, welded wire, first 50 square feet			CLO	PE1BX	171.12										
		Physical Collocation - Space enclosure, welded wire, first 100 square feet			CLO	PE1BW	189.73										
		Physical Collocation - Space enclosure, welded wire, each additional 50 square feet			CLO	PE1CW	18.61										
		Physical Collocation - Space Preparation - C.O. Modification per square ft.			CLO	PE1SK	2.38										
		Physical Collocation - Space Preparation, Common Systems Modifications-Cageless, per square foot			CLO	PE1SL	2.50										
		Physical Collocation - Space Preparation - Common Systems Modifications-Caged, per cage			CLO	PE1SM	84.93										
		Physical Collocation - Space Preparation - Firm Order Processing			CLO	PE1SJ		287.36									
		Physical Collocation - Space Availability Report, per Central Office Requested			CLO	PE1SR		572.66									
	Power																
		Physical Collocation - Power, -48V DC Power - per Fused Amp Requested			CLO	PE1PL	7.80										
		Physical Collocation - Power, 120V AC Power, Single Phase, per Breaker Amp			CLO	PE1FB	5.26										
		Physical Collocation - Power, 240V AC Power, Single Phase, per Breaker Amp			CLO	PE1FD	10.53										
		Physical Collocation - Power, 120V AC Power, Three Phase, per Breaker Amp			CLO	PE1FE	15.80										
		Physical Collocation - Power, 277V AC Power, Three Phase, per Breaker Amp			CLO	PE1FG	36.47										
		Physical Collocation - Power - DC power, per Used Amp			CLO	PE1FN	10.69										
	Cross Connects (Cross Connects, Co-Carrier Cross Connects, and Ports)																
		Physical Collocation - 2-wire cross-connect, loop, provisioning			UEANL,UEQ,UNCNX, UEA, UCL, UAL, UHL, UDN, UNCVX	PE1P2	0.0208	7.32	5.37	4.58	2.71						
		Physical Collocation - 4-wire cross-connect, loop, provisioning			UEA, UHL, UNCVX, UNCDX, UCL, UDL	PE1P4	0.0416	8.00	5.75	5.00	2.69						
		Physical Collocation -DS1 Cross-Connect for Physical Collocation, provisioning			WDS1L, WDS1S, UXTD1, ULDD1, USLEL, UNLD1, U1TD1, UNC1X, UEPSR, UEPSB, UEPSE, UEPSP, USL	PE1P1	0.3786	7.88	6.25	1.35	0.9899						

COLLOCATION - Florida														Attachment: 4		Exhibit: B	
CATEGORY		RATE ELEMENTS	Interim	Zone	BCS	USOC	RATES($)					Svc Order Submitted Elec per LSR	Svc Order Submitted Manually per LSR	Incremental Charge - Manual Svc Order vs. Electronic-1st	Incremental Charge - Manual Svc Order vs. Electronic-Add'l	Incremental Charge - Manual Svc Order vs. Electronic-Disc 1st	Incremental Charge - Manual Svc Order vs. Electronic-Disc Add'l
							Rec	Nonrecurring		Nonrecurring Disconnect		OSS Rates($)					
								First	Add'l	First	Add'l	SOMEC	SOMAN	SOMAN	SOMAN	SOMAN	SOMAN
		Physical Collocation - DS3 Cross-Connect, provisioning			UE3, U1TD3, UXTD3, UXTS1, UNC3X, UNCSX, ULDD3, U1TS1, ULDS1, UNLD3, UEPEX, UEPDX, UEPSR, UEPSB, UEPSE, UEPSP	PE1P3	4.16	32.40	31.03	11.15	10.98						
		Physical Collocation - 2-Fiber Cross-Connect			CLO, ULDO3, ULD12, ULD48, U1TO3, U1T12, U1T48, UDLO3, UDL12, UDF	PE1F2	1.71	28.26	25.85	13.78	11.01						
		Physical Collocation - 4-Fiber Cross-Connect			ULDO3, ULD12, ULD48, U1TO3, U1T12, U1T48, UDLO3, UDL12, UDF, UDFCX	PE1F4	3.34	37.92	35.51	18.20	15.44						
		Physical Collocation - Co-Carrier Cross Connects/Direct Connect - Fiber Cable Support Structure, per linear foot, per cable.			CLO	PE1ES	0.0008										
		Physical Collocation - Co-Carrier Cross Connect/Direct Connect - Copper/Coax Cable Support Structure, per linear foot, per cable.			CLO	PE1DS	0.0012										
		Physical Collocation 2-Wire Cross Connect, Port			UEPSR, UEPSP, UEPSE, UEPSB, UEPSX, UEP2C	PE1R2	0.0208	7.32	5.37	4.58	2.71						
		Physical Collocation 4-Wire Cross Connect, Port			UEPEX, UEPDD	PE1R4	0.0416	8.00	5.75	5.00	2.69						
	Security																
		Physical Collocation - Security Escort for Basic Time - normally scheduled work, per half hour			CLO	PE1BT		33.65	22.05								
		Physical Collocation - Security Escort for Overtime - outside of normally scheduled working hours on a scheduled work day, per half hour			CLO	PE1OT		44.63	28.89								
		Physical Collocation - Security Escort for Premium Time - outside of scheduled work day, per half hour			CLO	PE1PT		55.62	35.73								
		Physical Collocation - Security Access System - Security System per Central Office, per Sq. Ft.			CLO	PE1AY	0.0101										
		Physical Collocation -Security Access System - New Card Activation, per Card Activation (First), per State			CLO	PE1A1		38.95									
		Physical Collocation-Security Access System-Administrative Change, existing Access Card, per Request, per State, per Card			CLO	PE1AA		8.84									
		Physical Collocation - Security Access System - Replace Lost or Stolen Card, per Card			CLO	PE1AR		28.78									
		Physical Collocation - Security Access - Initial Key, per Key			CLO	PE1AK		23.28									
		Physical Collocation - Security Access - Key, Replace Lost or Stolen Key, per Key			CLO	PE1AL		23.28									
	CFA																
		Physical Collocation - CFA Information Resend Request, per premises, per arrangement, per request			CLO	PE1C9		79.52									
	Cable Records																
		Physical Collocation - Cable Records, per request			CLO	PE1CR		I 1515.00	S 973.64	256.35							
		Physical Collocation, Cable Records, VG/DS0 Cable, per cable record (maximum 3600 records)			CLO	PE1CD		646.84		362.41							
		Physical Collocation, Cable Records, VG/DS0 Cable, per each 100 pair			CLO	PE1CO		9.11		10.80							
		Physical Collocation, Cable Records, DS1, per T1 TIE			CLO	PE1C1		4.52		5.35							
		Physical Collocation, Cable Records, DS3, per T3 TIE			CLO	PE1C3		15.81		18.73							

COLLOCATION - Florida														Attachment: 4		Exhibit: B	
CATEGORY		RATE ELEMENTS	Interim	Zone	BCS	USOC	RATES($)					Svc Order Submitted Elec per LSR	Svc Order Submitted Manually per LSR	Incremental Charge - Manual Svc Order vs. Electronic-1st	Incremental Charge - Manual Svc Order vs. Electronic-Add'l	Incremental Charge - Manual Svc Order vs. Electronic-Disc 1st	Incremental Charge - Manual Svc Order vs. Electronic-Disc Add'l
							Rec	Nonrecurring		Nonrecurring Disconnect		OSS Rates($)					
								First	Add'l	First	Add'l	SOMEC	SOMAN	SOMAN	SOMAN	SOMAN	SOMAN
		Physical Collocation - Cable Records, Fiber Cable, per cable record (maximum 99 records)			CLO	PE1CB		169.96		149.97							
	Virtual to Physical																
		Physical Collocation - Virtual to Physical Collocation Relocation, per Voice Grade Circuit			CLO	PE1BV		33.00									
		Physical Collocation - Virtual to Physical Collocation Relocation, per DSO Circuit			CLO	PE1BO		33.00									
		Physical Collocation - Virtual to Physical Collocation Relocation, per DS1 Circuit			CLO	PE1B1		52.00									
		Physical Collocation - Virtual to Physical Collocation Relocation, per DS3 Circuit			CLO	PE1B3		52.00									
		Physical Collocation - Virtual to Physical Collocation In-Place, Per Voice Grade Circuit			CLO	PE1BR		23.00									
		Physical Collocation Virtual to Physical Collocation In-Place, Per DSO Circuit			CLO	PE1BP		23.00									
		Physical Collocation - Virtual to Physical Collocation In-Place, Per DS1 Circuit			CLO	PE1BS		33.00									
		Physical Collocation - Virtual to Physical Collocation In-Place, per DS3 Circuit			CLO	PE1BE		37.00									
	Entrance Cable																
		Physical Collocation - Cable Support Structure, per Entrance Cable			CLO	PE1PM	5.19										
		Physical Collocation - Fiber Entrance Cable per Cable (CO manhole to vault splice)			CLO	PE1EC		994.12		43.84							
		Physical Collocation - Fiber Entrance Cable Installation, per Fiber			CLO	PE1ED		7.43									
VIRTUAL COLLOCATION																	
	Application																
		Virtual Collocation - Application Fee			AMTFS	EAF		1,241.00		1.20							
		Virtual Collocation - Co-Carrier Cross Connects/Direct Connect, Application Fee, per application			AMTFS	VE1CA		564.81									
		Virtual Collocation Administrative Only - Application Fee			AMTFS	VE1AF		760.91		1.20							
	Space Preparation																
		Virtual Collocation - Floor Space, per sq. ft.			AMTFS	ESPVX	5.28										
	Power																
		Virtual Collocation - Power, per fused amp			AMTFS	ESPAX	6.95										
		Virtual Collocation - Power, DC power, per Used Amp			AMTFS	VE1PF	10.69										
	Cross Connects (Cross Connects, Co-Carrier Cross Connects, and Ports)																
		Virtual Collocation - 2-wire cross-connect, loop, provisioning			UEANL, UEA, UDN, UAL, UHL, UCL, UEQ, UNCVX, UNCDX, UNCNX	UEAC2	0.0201	7.32	5.37	4.58	2.71						
		Virtual Collocation - 4-wire cross-connect, loop, provisioning			UEA, UHL, UCL, UDL, UNCVX, UNCDX	UEAC4	0.0403	8.00	5.75	5.00	2.69						
		Virtual collocation - Special Access & UNE, cross-connect per DS1			ULR, UXTD1, UNC1X, ULDD1, U1TD1, USLEL, UNLD1, USL	CNC1X	0.3786	7.88	6.26	1.35	0.9915						
		Virtual collocation - Special Access & UNE, cross-connect per DS3			USL, UE3, U1TD3, UXTS1, UXTD3, UNC3X, UNCSX, ULDD3, U1TS1, ULDS1, UDLSX, UNLD3	CND3X	4.16	32.40	31.03	11.15	10.98						

COLLOCATION - Florida														Attachment: 4		Exhibit: B	
CATEGORY		RATE ELEMENTS	Interim	Zone	BCS	USOC	RATES($)					Svc Order Submitted Elec per LSR	Svc Order Submitted Manually per LSR	Incremental Charge - Manual Svc Order vs. Electronic-1st	Incremental Charge - Manual Svc Order vs. Electronic-Add'l	Incremental Charge - Manual Svc Order vs. Electronic-Disc 1st	Incremental Charge - Manual Svc Order vs. Electronic-Disc Add'l
							Rec	Nonrecurring		Nonrecurring Disconnect		OSS Rates($)					
								First	Add'l	First	Add'l	SOMEC	SOMAN	SOMAN	SOMAN	SOMAN	SOMAN
		Virtual Collocation - 2-Fiber Cross Connects			UDL12, UDLO3, U1T48, U1T12, U1TO3, ULDO3, ULD12, ULD48, UDF	CNC2F	1.75	28.26	25.85	13.78	11.01						
		Virtual Collocation - 4-Fiber Cross Connects			UDL12, UDLO3, U1T48, U1T12, U1TO3, ULDO3, ULD12, ULD48, UDF	CNC4F	3.50	37.92	35.51	18.20	15.44						
		Virtual Collocation - Co-Carrier Cross Connects/Direct Connect - Fiber Cable Support Structure, per linear foot, per cable			AMTFS	VE1CB	0.0008										
		Virtual Collocation - Co-Carrier Cross Connects/Direct Connect - Copper/Coax Cable Support Structure, per linear foot, per cable			AMTFS	VE1CD	0.0012										
		Virtual Collocation 2-Wire Cross Connect, Port			UEPSX, UEPSB, UEPSE, UEPSP, UEPSR, UEP2C	VE1R2	0.0201	7.32	5.37	4.58	2.71						
		Virtual Collocation 4-Wire Cross Connect, Port			UEPDD, UEPEX	VE1R4	0.0403	8.00	5.75	5.00	2.69						
	CFA																
		Virtual Collocation - CFA Information Resend Request, per Premises, per Arrangement, per request			AMTFS	VE1QR		79.52									
	Cable Records																
		Virtual Collocation Cable Records - per request			AMTFS	VE1BA		I 1515.00	S 973.64	256.35							
		Virtual Collocation Cable Records - VG/DS0 Cable, per cable record			AMTFS	VE1BB		646.84		362.41							
		Virtual Collocation Cable Records - VG/DS0 Cable, per each 100 pair			AMTFS	VE1BC		9.11		10.80							
		Virtual Collocation Cable Records - DS1, per T1TIE			AMTFS	VE1BD		4.52		5.35							
		Virtual Collocation Cable Records - DS3, per T3TIE			AMTFS	VE1BE		15.81		18.73							
		Virtual Collocation Cable Records - Fiber Cable, per 99 fiber records			AMTFS	VE1BF		169.96		149.97							
	Security																
		Virtual collocation - Security escort, basic time, normally scheduled work hours			AMTFS	SPTBX		33.65	22.05								
		Virtual collocation - Security escort, overtime, outside of normally scheduled work hours on a normal working day			AMTFS	SPTOX		44.63	28.89								
		Virtual collocation - Security escort, premium time, outside of a scheduled work day			AMTFS	SPTPX		55.62	35.73								
	Maintenance																
		Virtual collocation - Maintenance in CO - Basic, per half hour			AMTFS	CTRLX		54.05	22.05								
		Virtual collocation - Maintenance in CO - Overtime, per half hour			AMTFS	SPTOM		72.18	28.89								
		Virtual collocation - Maintenance in CO - Premium per half hour			AMTFS	SPTPM		90.31	35.73								
	Entrance Cable																
		Virtual Collocation - Cable Installation Charge, per cable			AMTFS	ESPCX		1,473.00		43.84							
		Virtual Collocation - Cable Support Structure, per cable			AMTFS	ESPSX	4.54										
COLLOCATION IN THE REMOTE SITE																	
	Physical Remote Site Collocation																
		Physical Collocation in the Remote Site - Application Fee			CLORS	PE1RA		612.23		270.35							
		Cabinet Space in the Remote Site per Bay/ Rack			CLORS	PE1RB	154.59										
		Physical Collocation in the Remote Site - Security Access - Key			CLORS	PE1RD		23.28									
		Physical Collocation in the Remote Site - Space Availability Report per Premises Requested			CLORS	PE1SR		223.91									
		Physical Collocation in the Remote Site - Remote Site CLLI Code Request, per CLLI Code Requested			CLORS	PE1RE		73.39									

COLLOCATION - Florida														Attachment: 4		Exhibit: B	
CATEGORY		RATE ELEMENTS	Interim	Zone	BCS	USOC	RATES($)					Svc Order Submitted Elec per LSR	Svc Order Submitted Manually per LSR	Incremental Charge - Manual Svc Order vs. Electronic-1st	Incremental Charge - Manual Svc Order vs. Electronic-Add'l	Incremental Charge - Manual Svc Order vs. Electronic-Disc 1st	Incremental Charge - Manual Svc Order vs. Electronic-Disc Add'l
							Rec	Nonrecurring		Nonrecurring Disconnect		OSS Rates($)					
								First	Add'l	First	Add'l	SOMEC	SOMAN	SOMAN	SOMAN	SOMAN	SOMAN
		Remote Site DLEC Data (BRSDD), per Compact Disk, per CO			CLORS	PE1RR		208.02									
		Physical Collocation - Security Escort for Basic Time - normally scheduled work, per half hour			CLORS	PE1BT		33.65	22.05								
		Physical Collocation - Security Escort for Overtime - outside of normally scheduled working hours on a scheduled work day, per half hour			CLORS	PE1OT		44.63	28.89								
		Physical Collocation - Security Escort for Premium Time - outside of scheduled work day, per half hour			CLORS	PE1PT		55.62	35.73								
	Adjacent Remote Site Collocation																
		Remote Site-Adjacent Collocation-Application Fee			CLORS	PE1RU		755.62	755.62								
		Remote Site-Adjacent Collocation - Real Estate, per square foot			CLORS	PE1RT	0.134										
		Remote Site-Adjacent Collocation - AC Power, per breaker amp			CLORS	PE1RS	6.27										
	NOTE: If Security Escort and/or Add'l Engineering Fees become necessary for adjacent remote site collocation, the Parties will negotiate appropriate rates.																
	Virtual Remote Site Collocation																
		Virtual Collocation in the Remote Site - Application Fee			VE1RS	VE1RB		612.23		270.35							
		Virtual Collocation in the Remote Site - Per Bay/Rack of Space			VE1RS	VE1RC	154.59										
		Virtual Collocation in the Remote Site - Space Availability Report per Premises requested			VE1RS	VE1RR		223.91									
		Virtual Collocation in the Remote Site - Remote Site CLLI Code Request, per CLLI Code Requested			VE1RS	VE1RL		73.39									
ADJACENT COLLOCATION																	
		Adjacent Collocation - Space Charge per Sq. Ft.			CLOAC	PE1JA	0.1666										
		Adjacent Collocation - Electrical Facility Charge per Linear Ft.			CLOAC	PE1JC	4.62										
		Adjacent Collocation - 2-Wire Cross-Connects			UEANL,UEQ,UEA,UCL, UAL, UHL, UDN	PE1JE	0.0194	7.32	5.37	4.58	2.71						
		Adjacent Collocation - 4-Wire Cross-Connects			UEA,UHL,UDL,UCL	PE1JF	0.0388	8.00	5.75	5.00	2.69						
		Adjacent Collocation - DS1 Cross-Connects			USL	PE1JG	0.3708	7.88	6.26	1.35	0.9915						
		Adjacent Collocation - DS3 Cross-Connects			UE3	PE1JH	4.14	32.40	31.03	11.15	10.98						
		Adjacent Collocation - 2-Fiber Cross-Connect			CLOAC	PE1JJ	1.70	28.26	25.85	13.78	11.01						
		Adjacent Collocation - 4-Fiber Cross-Connect			CLOAC	PE1JK	3.33	37.92	35.51	18.20	15.44						
		Adjacent Collocation - Application Fee			CLOAC	PE1JB		2,763.00		1.02							
		Adjacent Collocation - 120V, Single Phase Standby Power Rate per AC Breaker Amp			CLOAC	PE1JL	5.26										
		Adjacent Collocation - 240V, Single Phase Standby Power Rate per AC Breaker Amp			CLOAC	PE1JM	10.53										
		Adjacent Collocation - 120V, Three Phase Standby Power Rate per AC Breaker Amp			CLOAC	PE1JN	15.80										
		Adjacent Collocation - 277V, Three Phase Standby Power Rate per AC Breaker Amp			CLOAC	PE1JO	36.47										
		Adjacent Collocation - Cable Support Structure per Entrance Cable			CLOAC	PE1JP	5.19										
	NOTE: Rates displaying an "R" in the interim column are interim and subject to rate true-up as set forth in General Terms and Conditions.																

COLLOCATION - Georgia														Attachment: 4		Exhibit: B	
CATEGORY		RATE ELEMENTS	Interim	Zone	BCS	USOC	RATES($)					Svc Order Submitted Elec per LSR	Svc Order Submitted Manually per LSR	Incremental Charge - Manual Svc Order vs. Electronic-1st	Incremental Charge - Manual Svc Order vs. Electronic-Add'l	Incremental Charge - Manual Svc Order vs. Electronic-Disc 1st	Incremental Charge - Manual Svc Order vs. Electronic-Disc Add'l
							Rec	Nonrecurring		Nonrecurring Disconnect		OSS Rates($)					
								First	Add'l	First	Add'l	SOMEC	SOMAN	SOMAN	SOMAN	SOMAN	SOMAN
PHYSICAL COLLOCATION																	
	Application																
		Physical Collocation - Initial Application Fee			CLO	PE1BA		1,285.98		0.59							
		Physical Collocation - Subsequent Application Fee			CLO	PE1CA		1,085.48		0.59							
		Physical Collocation - Co-Carrier Cross Connects/Direct Connect, Application Fee, per application			CLO	PE1DT		583.18									
		Physical Collocation - Power Reconfiguration Only, Application Fee			CLO	PE1PR		398.80									
		Physical Collocation Administrative Only - Application Fee			CLO	PE1BL		740.83									
		Physical Collocation - Application Cost, Simple Augment			CLO	PE1KS		594.05		1.21							
		Physical Collocation - Application Cost, Minor Augment			CLO	PE1KM		832.95		1.21							
		Physical Collocation - Application Cost, Intermediate Augment			CLO	PE1K1		1,057.00		1.21							
		Physical Collocation - Application Cost - Major Augment			CLO	PE1KJ		2,408.00		1.21							
	Space Preparation																
		Physical Collocation - Floor Space, per sq feet			CLO	PE1PJ	4.52										
		Physical Collocation - Space Enclosure, welded wire, first 50 square feet			CLO	PE1BX	144.71										
		Physical Collocation - Space enclosure, welded wire, first 100 square feet			CLO	PE1BW	160.45										
		Physical Collocation - Space enclosure, welded wire, each additional 50 square feet			CLO	PE1CW	15.74										
		Physical Collocation - Space Preparation - C.O. Modification per square ft.			CLO	PE1SK	2.01										
		Physical Collocation - Space Preparation, Common Systems Modifications-Cageless, per square foot			CLO	PE1SL	2.23										
		Physical Collocation - Space Preparation - Common Systems Modifications-Caged, per cage			CLO	PE1SM	75.61										
		Physical Collocation - Space Preparation - Firm Order Processing			CLO	PE1SJ		141.10									
		Physical Collocation - Space Availability Report, per Central Office Requested			CLO	PE1SR		248.75									
	Power																
		Physical Collocation - Power, -48V DC Power - per Fused Amp Requested			CLO	PE1PL	4.78										
		Physical Collocation - Power, 120V AC Power, Single Phase, per Breaker Amp			CLO	PE1FB	5.14										
		Physical Collocation - Power, 240V AC Power, Single Phase, per Breaker Amp			CLO	PE1FD	10.30										
		Physical Collocation - Power, 120V AC Power, Three Phase, per Breaker Amp			CLO	PE1FE	15.44										
		Physical Collocation - Power, 277V AC Power, Three Phase, per Breaker Amp			CLO	PE1FG	35.65										
	Cross Connects (Cross Connects, Co-Carrier Cross Connects, and Ports)																
		Physical Collocation - 2-wire cross-connect, loop, provisioning			UEANL,UEQ, UNCNX, UEA, UCL, UAL, UHL, UDN, UNCVX	PE1P2	0.0197										
		Physical Collocation - 4-wire cross-connect, loop, provisioning			UEA, UHL, UNCVX, UNCDX, UCL, UDL	PE1P4	0.0393										
		Physical Collocation -DS1 Cross-Connect for Physical Collocation, provisioning			WDS1L, WDS1S, UXTD1, ULDD1, USLEL, UNLD1, U1TD1, UNC1X, UEPSR, UEPSB, UEPSE, UEPSP, USL	PE1P1	0.3726										

COLLOCATION - Georgia														Attachment: 4		Exhibit: B	
CATEGORY		RATE ELEMENTS	Interim	Zone	BCS	USOC	RATES($)					Svc Order Submitted Elec per LSR	Svc Order Submitted Manually per LSR	Incremental Charge - Manual Svc Order vs. Electronic-1st	Incremental Charge - Manual Svc Order vs. Electronic-Add'l	Incremental Charge - Manual Svc Order vs. Electronic-Disc 1st	Incremental Charge - Manual Svc Order vs. Electronic-Disc Add'l
							Rec	Nonrecurring		Nonrecurring Disconnect		OSS Rates($)					
								First	Add'l	First	Add'l	SOMEC	SOMAN	SOMAN	SOMAN	SOMAN	SOMAN
		Physical Collocation - DS3 Cross-Connect, provisioning			UE3, U1TD3, UXTD3, UXTS1, UNC3X, UNCSX, ULDD3, U1TS1, ULDS1, UNLD3, UEPEX, UEPDX, UEPSR, UEPSB, UEPSE, UEPSP	PE1P3	4.06										
		Physical Collocation - 2-Fiber Cross-Connect			CLO, ULDO3, ULD12, ULD48, U1TO3, U1T12, U1T48, UDLO3, UDL12, UDF	PE1F2	1.72										
		Physical Collocation - 4-Fiber Cross-Connect			ULDO3, ULD12, ULD48, U1TO3, U1T12, U1T48, UDLO3, UDL12, UDF, UDFCX	PE1F4	3.30										
		Physical Collocation - Co-Carrier Cross Connects/Direct Connect - Fiber Cable Support Structure, per linear foot, per cable.			CLO	PE1ES	0.001										
		Physical Collocation - Co-Carrier Cross Connect/Direct Connect - Copper/Coax Cable Support Structure, per linear foot, per cable.			CLO	PE1DS	0.0015										
		Physical Collocation 2-Wire Cross Connect, Port			UEPSR, UEPSP, UEPSE, UEPSB, UEPSX, UEP2C	PE1R2	0.0197										
		Physical Collocation 4-Wire Cross Connect, Port			UEPEX, UEPDD	PE1R4	0.0393										
	Security																
		Physical Collocation - Security Escort for Basic Time - normally scheduled work, per half hour			CLO	PE1BT		16.52	10.83								
		Physical Collocation - Security Escort for Overtime - outside of normally scheduled working hours on a scheduled work day, per half hour			CLO	PE1OT		21.92	14.19								
		Physical Collocation - Security Escort for Premium Time - outside of scheduled work day, per half hour			CLO	PE1PT		27.31	17.55								
		Physical Collocation - Security Access System - Security System per Central Office, per Sq. Ft.			CLO	PE1AY	0.0106										
		Physical Collocation -Security Access System - New Card Activation, per Card Activation (First), per State			CLO	PE1A1		22.00									
		Physical Collocation - Security Access System - New Access Card Deactivation, per Card			CLO	PE1A4		8.72	8.72								
		Physical Collocation-Security Access System-Administrative Change, existing Access Card, per Request, per State, per Card			CLO	PE1AA		5.38									
		Physical Collocation - Security Access System - Replace Lost or Stolen Card, per Card			CLO	PE1AR		17.01									
		Physical Collocation - Security Access - Initial Key, per Key			CLO	PE1AK		13.20									
		Physical Collocation - Security Access - Key, Replace Lost or Stolen Key, per Key			CLO	PE1AL		13.20									
	CFA																
		Physical Collocation - CFA Information Resend Request, per premises, per arrangement, per request			CLO	PE1C9		77.42									
	Cable Records																
		Physical Collocation - Cable Records, per request			CLO	PE1CR		I 743.65	S 478.06	125.75							
		Physical Collocation, Cable Records, VG/DS0 Cable, per cable record (maximum 3600 records)			CLO	PE1CD		317.60		177.77							
		Physical Collocation, Cable Records, VG/DS0 Cable, per each 100 pair			CLO	PE1CO		4.48		5.30							

COLLOCATION - Georgia														Attachment: 4		Exhibit: B	
CATEGORY		RATE ELEMENTS	Interim	Zone	BCS	USOC	RATES($)					Svc Order Submitted Elec per LSR	Svc Order Submitted Manually per LSR	Incremental Charge - Manual Svc Order vs. Electronic-1st	Incremental Charge - Manual Svc Order vs. Electronic-Add'l	Incremental Charge - Manual Svc Order vs. Electronic-Disc 1st	Incremental Charge - Manual Svc Order vs. Electronic-Disc Add'l
							Rec	Nonrecurring		Nonrecurring Disconnect		OSS Rates($)					
								First	Add'l	First	Add'l	SOMEC	SOMAN	SOMAN	SOMAN	SOMAN	SOMAN
		Physical Collocation, Cable Records, DS1, per T1 TIE			CLO	PE1C1		2.22		2.63							
		Physical Collocation, Cable Records, DS3, per T3 TIE			CLO	PE1C3		7.76		9.19							
		Physical Collocation - Cable Records, Fiber Cable, per cable record (maximum 99 records)			CLO	PE1CB		83.45		73.57							
	Virtual to Physical																
		Physical Collocation - Virtual to Physical Collocation Relocation, per Voice Grade Circuit			CLO	PE1BV		33.00									
		Physical Collocation - Virtual to Physical Collocation Relocation, per DSO Circuit			CLO	PE1BO		33.00									
		Physical Collocation - Virtual to Physical Collocation Relocation, per DS1 Circuit			CLO	PE1B1		52.00									
		Physical Collocation - Virtual to Physical Collocation Relocation, per DS3 Circuit			CLO	PE1B3		52.00									
		Physical Collocation - Virtual to Physical Collocation In-Place, Per Voice Grade Circuit			CLO	PE1BR		23.00									
		Physical Collocation Virtual to Physical Collocation In-Place, Per DSO Circuit			CLO	PE1BP		23.00									
		Physical Collocation - Virtual to Physical Collocation In-Place, Per DS1 Circuit			CLO	PE1BS		33.00									
		Physical Collocation - Virtual to Physical Collocation In-Place, per DS3 Circuit			CLO	PE1BE		37.00									
	Entrance Cable																
		Physical Collocation - Cable Installation, Pricing, non-recurring charge, per Entrance Cable			CLO	PE1BD		736.93		21.51							
		Physical Collocation - Cable Support Structure, per Entrance Cable			CLO	PE1PM	7.21										
		Physical Collocation, Entrance Cable Support Structure, Copper, per each 100 pairs or fraction thereof (CO Manhole to Collocation Space)			CLO	PE1EE	0.2629										
		Physical Collocation, Entrance Cable Installation, Copper, per Cable (CO Manhole to Collocation Space)			CLO	PE1EF		755.15		21.51							
		Physical Collocation, Entrance Cable Installation, Copper, per each 100 pairs or fraction thereof (CO Manhole to Collocation Space)			CLO	PE1EG		9.12									
		Physical Collocation - Fiber Entrance Cable Installation, per Fiber			CLO	PE1ED		3.90									
VIRTUAL COLLOCATION																	
	Application																
		Virtual Collocation - Application Fee			AMTFS	EAF		609.52		0.59							
		Virtual Collocation - Co-Carrier Cross Connects/Direct Connect, Application Fee, per application			AMTFS	VE1CA		583.18									
		Virtual Collocation Administrative Only - Application Fee			AMTFS	VE1AF		609.52									
	Space Preparation																
		Virtual Collocation - Floor Space, per sq. ft.			AMTFS	ESPVX	4.52										
	Power																
		Virtual Collocation - Power, per fused amp			AMTFS	ESPAX	4.78										
	Cross Connects (Cross Connects, Co-Carrier Cross Connects, and Ports)																
		Virtual Collocation - 2-wire cross-connect, loop, provisioning			UEANL, UEA, UDN, UAL, UHL, UCL, UEQ, UNCVX, UNCDX, UNCNX	UEAC2	0.0188										
		Virtual Collocation - 4-wire cross-connect, loop, provisioning			UEA, UHL, UCL, UDL, UNCVX, UNCDX	UEAC4	0.0375										
		Virtual collocation - Special Access & UNE, cross-connect per DS1			ULR, UXTD1, UNC1X, ULDD1, U1TD1, USLEL, UNLD1, USL	CNC1X	0.3726										

COLLOCATION - Georgia														Attachment: 4		Exhibit: B	
CATEGORY		RATE ELEMENTS	Interim	Zone	BCS	USOC	RATES($)					Svc Order Submitted Elec per LSR	Svc Order Submitted Manually per LSR	Incremental Charge - Manual Svc Order vs. Electronic-1st	Incremental Charge - Manual Svc Order vs. Electronic-Add'l	Incremental Charge - Manual Svc Order vs. Electronic-Disc 1st	Incremental Charge - Manual Svc Order vs. Electronic-Disc Add'l
								Nonrecurring		Nonrecurring Disconnect		OSS Rates($)					
							Rec	First	Add'l	First	Add'l	SOMEC	SOMAN	SOMAN	SOMAN	SOMAN	SOMAN
		Virtual collocation - Special Access & UNE, cross-connect per DS3			USL, UE3, U1TD3, UXTS1, UXTD3, UNC3X, UNCSX, ULDD3, U1TS1, ULDS1, UDLSX, UNLD3	CND3X	4.06										
		Virtual Collocation - 2-Fiber Cross Connects			UDL12, UDLO3, U1T48, U1T12, U1TO3, ULDO3, ULD12, ULD48, UDF	CNC2F	1.73										
		Virtual Collocation - 4-Fiber Cross Connects			UDL12, UDLO3, U1T48, U1T12, U1TO3, ULDO3, ULD12, ULD48, UDF	CNC4F	3.45										
		Virtual Collocation - Co-Carrier Cross Connects/Direct Connect - Fiber Cable Support Structure, per linear foot, per cable			AMTFS	VE1CB	0.001										
		Virtual Collocation - Co-Carrier Cross Connects/Direct Connect - Copper/Coax Cable Support Structure, per linear foot, per cable			AMTFS	VE1CD	0.0015										
		Virtual Collocation 2-Wire Cross Connect, Port			UEPSX, UEPSB, UEPSE, UEPSP, UEPSR, UEP2C	VE1R2	0.0188										
		Virtual Collocation 4-Wire Cross Connect, Port			UEPDD, UEPEX	VE1R4	0.0375										
	CFA																
		Virtual Collocation - CFA Information Resend Request, per Premises, per Arrangement, per request			AMTFS	VE1QR		77.42									
	Cable Records																
		Virtual Collocation Cable Records - per request			AMTFS	VE1BA		743.65	478.06	125.75							
		Virtual Collocation Cable Records - VG/DS0 Cable, per cable record			AMTFS	VE1BB		317.60		177.77							
		Virtual Collocation Cable Records - VG/DS0 Cable, per each 100 pair			AMTFS	VE1BC		4.48		5.30							
		Virtual Collocation Cable Records - DS1, per T1TIE			AMTFS	VE1BD		2.22		2.63							
		Virtual Collocation Cable Records - DS3, per T3TIE			AMTFS	VE1BE		7.76		9.19							
		Virtual Collocation Cable Records - Fiber Cable, per 99 fiber records			AMTFS	VE1BF		83.45		73.57							
	Security																
		Virtual collocation - Security escort, basic time, normally scheduled work hours			AMTFS	SPTBX		16.52	10.83								
		Virtual collocation - Security escort, overtime, outside of normally scheduled work hours on a normal working day			AMTFS	SPTOX		21.92	14.19								
		Virtual collocation - Security escort, premium time, outside of a scheduled work day			AMTFS	SPTPX		27.31	17.55								
	Maintenance																
		Virtual collocation - Maintenance in CO - Basic, per half hour			AMTFS	CTRLX		26.54	10.83								
		Virtual collocation - Maintenance in CO - Overtime, per half hour			AMTFS	SPTOM		35.44	14.19								
		Virtual collocation - Maintenance in CO - Premium per half hour			AMTFS	SPTPM		44.34	17.55								
	Entrance Cable																
		Virtual Collocation - Cable Installation Charge, per cable			AMTFS	ESPCX		736.93		21.51							
		Virtual Collocation - Cable Support Structure, per cable			AMTFS	ESPSX	7.57										
		Virtual Collocation, Entrance Cable Support Structure, Copper, per each 100 pairs or fraction thereof (CO Manhole to Frame)			AMTFS	VE1EE	0.23										

COLLOCATION - Georgia														Attachment: 4		Exhibit: B	
CATEGORY		RATE ELEMENTS	Interim	Zone	BCS	USOC	RATES($)					Svc Order Submitted Elec per LSR	Svc Order Submitted Manually per LSR	Incremental Charge - Manual Svc Order vs. Electronic-1st	Incremental Charge - Manual Svc Order vs. Electronic-Add'l	Incremental Charge - Manual Svc Order vs. Electronic-Disc 1st	Incremental Charge - Manual Svc Order vs. Electronic-Disc Add'l
							Rec	Nonrecurring		Nonrecurring Disconnect		OSS Rates($)					
								First	Add'l	First	Add'l	SOMEC	SOMAN	SOMAN	SOMAN	SOMAN	SOMAN
		Virtual Collocation, Entrance Cable Installation, Copper, per Cable (CO Manhole to Frame)			AMTFS	VE1EF		755.15		21.51							
		Virtual Collocation, Entrance Cable Installation, Copper, per each 100 pairs or fraction thereof (CO Manhole to Frame)			AMTFS	VE1EG		9.12									
COLLOCATION IN THE REMOTE SITE																	
	Physical Remote Site Collocation																
		Physical Collocation in the Remote Site - Application Fee			CLORS	PE1RA		300.61		132.62							
		Cabinet Space in the Remote Site per Bay/ Rack			CLORS	PE1RB	143.23										
		Physical Collocation in the Remote Site - Security Access - Key			CLORS	PE1RD		13.20									
		Physical Collocation in the Remote Site - Space Availability Report per Premises Requested			CLORS	PE1SR		109.94									
		Physical Collocation in the Remote Site - Remote Site CLLI Code Request, per CLLI Code Requested			CLORS	PE1RE		36.04									
		Remote Site DLEC Data (BRSDD), per Compact Disk, per CO			CLORS	PE1RR		116.64									
		Physical Collocation - Security Escort for Basic Time - normally scheduled work, per half hour			CLORS	PE1BT		16.52	10.83								
		Physical Collocation - Security Escort for Overtime - outside of normally scheduled working hours on a scheduled work day, per half hour			CLORS	PE1OT		21.92	14.19								
		Physical Collocation - Security Escort for Premium Time - outside of scheduled work day, per half hour			CLORS	PE1PT		27.31	17.55								
	Adjacent Remote Site Collocation																
		Remote Site-Adjacent Collocation-Application Fee			CLORS	PE1RU		755.62	755.62								
		Remote Site-Adjacent Collocation - Real Estate, per square foot			CLORS	PE1RT	0.134										
		Remote Site-Adjacent Collocation - AC Power, per breaker amp			CLORS	PE1RS	6.27										
	NOTE: If Security Escort and/or Add'l Engineering Fees become necessary for adjacent remote site collocation, the Parties will negotiate appropriate rates.																
	Virtual Remote Site Collocation																
		Virtual Collocation in the Remote Site - Application Fee			VE1RS	VE1RB		300.61		132.62							
		Virtual Collocation in the Remote Site - Per Bay/Rack of Space			VE1RS	VE1RC	143.23										
		Virtual Collocation in the Remote Site - Space Availability Report per Premises requested			VE1RS	VE1RR		109.94									
		Virtual Collocation in the Remote Site - Remote Site CLLI Code Request, per CLLI Code Requested			VE1RS	VE1RL		36.04									
ADJACENT COLLOCATION																	
		Adjacent Collocation - Space Charge per Sq. Ft.			CLOAC	PE1JA	0.164										
		Adjacent Collocation - Electrical Facility Charge per Linear Ft.			CLOAC	PE1JC	4.01										
		Adjacent Collocation - 2-Wire Cross-Connects			UEANL,UEQ,UEA,UCL, UAL, UHL, UDN	PE1JE	0.0172										
		Adjacent Collocation - 4-Wire Cross-Connects			UEA,UHL,UDL,UCL	PE1JF	0.0344										
		Adjacent Collocation - DS1 Cross-Connects			USL	PE1JG	0.3608										
		Adjacent Collocation - DS3 Cross-Connects			UE3	PE1JH	4.73										
		Adjacent Collocation - 2-Fiber Cross-Connect			CLOAC	PE1JJ	1.66										
		Adjacent Collocation - 4-Fiber Cross-Connect			CLOAC	PE1JK	3.24										
		Adjacent Collocation - Application Fee			CLOAC	PE1JB		1,382.19		0.50							
		Adjacent Collocation - 120V, Single Phase Standby Power Rate per AC Breaker Amp			CLOAC	PE1JL	5.14										
		Adjacent Collocation - 240V, Single Phase Standby Power Rate per AC Breaker Amp			CLOAC	PE1JM	10.30										
		Adjacent Collocation - 120V, Three Phase Standby Power Rate per AC Breaker Amp			CLOAC	PE1JN	15.44										
		Adjacent Collocation - 277V, Three Phase Standby Power Rate per AC Breaker Amp			CLOAC	PE1JO	35.65										
		Adjacent Collocation - 240V, Three Phase Standby Power Rate per AC Breaker Amp	I		CLOAC	PE1JD	35.65										

COLLOCATION - Georgia														Attachment: 4		Exhibit: B	
CATEGORY		RATE ELEMENTS	Interim	Zone	BCS	USOC	RATES($)					Svc Order Submitted Elec per LSR	Svc Order Submitted Manually per LSR	Incremental Charge - Manual Svc Order vs. Electronic-1st	Incremental Charge - Manual Svc Order vs. Electronic-Add'l	Incremental Charge - Manual Svc Order vs. Electronic-Disc 1st	Incremental Charge - Manual Svc Order vs. Electronic-Disc Add'l
							Rec	Nonrecurring		Nonrecurring Disconnect		OSS Rates($)					
								First	Add'l	First	Add'l	SOMEC	SOMAN	SOMAN	SOMAN	SOMAN	SOMAN
	NOTE: Rates displaying an "R" in the interim column are interim and subject to rate true-up as set forth in General Terms and Conditions.																

Attachment 5

Access to Numbers and Number Portability

TABLE OF CONTENTS

1. NON-DISCRIMINATORY ACCESS TO TELEPHONE NUMBERS..... 3

2. LOCAL NUMBER PORTABILITY 4

3. OSS RATES 5

4. LNP IN CONJUNCTION WITH LOCAL SWITCHING..... 5

ACCESS TO NUMBERS AND NUMBER PORTABILITY

1. NON-DISCRIMINATORY ACCESS TO TELEPHONE NUMBERS

1.1 During the term of this Agreement, where Neutral Tandem is utilizing its own switch, Neutral Tandem shall contact the North American Numbering Plan Administrator (NANPA), or, where applicable, the relevant Number Pool Administrator for the assignment of numbering resources.

1.2 Where BellSouth provides local switching or resold services to Neutral Tandem, BellSouth will provide Neutral Tandem with online access to available telephone numbers as defined by applicable FCC rules and regulations on a first come first served basis. Neutral Tandem acknowledges that such access to numbers shall be in accordance with the appropriate FCC rules and regulations. Neutral Tandem may designate up to a forecasted six (6) months supply of available numbers as intermediate (an available number provided to Neutral Tandem) telephone numbers per rate center if the following conditions are met:

1.2.1 Neutral Tandem must: (1) indicate that all of the intermediate numbers currently held by Neutral Tandem in each rate center where Neutral Tandem will be requesting intermediate telephone numbers have six (6) or less months to exhaust; (2) supply projected monthly telephone number demand on a rate center basis for the coming twelve (12) months for each rate center where Neutral Tandem will be requesting intermediate telephone numbers; and, (3) demonstrate that the utilization level on current intermediate numbers held by Neutral Tandem in the rate center where Neutral Tandem is requesting telephone numbers has reached at least 75%.

1.2.2 The above information will be provided by Neutral Tandem by submitting to BellSouth a fully completed "CO Code Assignments Months To Exhaust Certification Worksheet – TN Level" ("MTE Worksheet"), Appendix B to the Central Office Code (NXX) Assignments Guidelines, INC 95-0407-008 for each rate center where Neutral Tandem will be requesting intermediate telephone numbers. The utilization level is calculated by dividing all intermediate numbers currently assigned by Neutral Tandem to End Users by the total number of intermediate numbers held by Neutral Tandem in the rate center and multiplying the result by one hundred (100).

1.2.3 If fulfilling Neutral Tandem's request for intermediate numbers results in BellSouth having to submit a request for additional telephone numbers to a national numbering administrator (either NANPA CO Code Administration or NeuStar Pooling Administration or their successors), BellSouth will submit the required numbering request to the national numbering administrator to satisfy Neutral

Tandem's request for intermediate numbers. BellSouth will also pursue all appropriate steps (including submitting a safety valve request (petition) to the appropriate Commission if the numbering request is denied by the national administrator) to satisfy Neutral Tandem's request for intermediate numbers. In these cases, BellSouth is not obligated to fulfill the request by Neutral Tandem for intermediate numbers unless, and until, BellSouth's request for additional numbering resources is granted.

1.2.4 Neutral Tandem agrees to supply supporting information for any numbering request and/or safety valve request that BellSouth files pursuant to Section 1.2.3above.

1.3 Neutral Tandem acknowledges that there may be instances where there is an industry shortage of available telephone numbers in a number plan area (NPA). These instances occur where a jeopardy status has been declared by NANPA and the industry has determined that limiting the assignment of new numbers is the appropriate method to employ until the jeopardy can be alleviated. In such NPA jeopardy situations where assignment of new numbers is restricted per the jeopardy guidelines developed by the industry, BellSouth may request that Neutral Tandem cancel all or a portion of its unassigned intermediate numbers. Neutral Tandem's consent to BellSouth's request shall not be unreasonably withheld.

2. LOCAL NUMBER PORTABILITY

2.1 The Parties will offer Local number portability (LNP) in accordance with rules, regulations and guidelines adopted by the Commission, the FCC and industry fora.

2.2 Service Management System (SMS) Administration. The Parties will work cooperatively with other local service providers to establish and maintain contracts for the LNP SMS.

2.3 Network Architecture. The Parties agree to adhere to applicable FCC rules and orders governing LNP network architecture.

2.4 Signaling. In connection with LNP, each Party agrees to use SS7 signaling in accordance with applicable FCC rules and orders.

2.5 N-1 Query. The Parties agree to adhere to applicable FCC rules and orders governing LNP N-1 queries.

2.6 Porting of Reserved Numbers and Suspended Lines. End Users of each Party may port numbers, via LNP, that are in a denied state or that are on suspend status. In addition, End Users of each Party may port reserved numbers that the End User has paid to reserve. Portable reserved numbers are identified on the Customer Service Record (CSR). In anticipation of porting from one Party to the other Party, a Party's End User may reserve additional telephone numbers and include them with the numbers that are subsequently ported to the other Party. It is not necessary to restore a denied number before it is ported.

2.7 Splitting of Number Groups. The Parties shall permit blocks of subscriber numbers (including, but not limited to, Direct Inward Dial (DID) numbers and MultiServ groups) to be split in connection with an LNP request. BellSouth and Neutral Tandem shall permit End Users who port a portion of DID numbers to retain DID service on the remaining portion of numbers. If a Party requests porting a range of DID numbers smaller than a whole block, that Party shall pay the applicable charges for doing so as set forth in Attachment 2 of this Agreement. In the event no rate is set forth in Attachment 2, then the Parties shall negotiate a rate for such services.

2.8 The Parties will set Location Routing Number (LRN) unconditional or 10-digit triggers where applicable. Where triggers are set, the porting Party will remove the ported number at the same time the trigger is removed.

2.9 A trigger order is a service order issued in advance of the porting of a number. A trigger order 1) initiates call queries to the AIN SS7 network in advance of the number being ported; and 2) provides for the new service provider to be in control of when a number ports.

2.10 Where triggers are not set, the Parties shall coordinate the porting of the number between service providers so as to minimize service interruptions to the End User.

2.11 BellSouth and Neutral Tandem will work cooperatively to implement changes to LNP process flows ordered by the FCC or as recommended by standard industry foras addressing LNP.

2.12 Where Neutral Tandem utilizes BellSouth's LNP Query Service, BellSouth shall bill and Neutral Tandem shall pay the query charge associated with LNP Query Service as set forth in Attachment 2. To receive the LNP Query Service charge set forth in Attachment 2, Neutral Tandem shall fill out and submit the Interconnection data sheet for BellSouth LNP Query Service. The form can be obtained on www.interconnection.bellsouth.com under BellSouth LNP Query Service and click on forms. Once the form has been filled out and submitted the LNP Query charge will take effect on the approved date. This charge is not subject to the resale discount set forth in Attachment 1 of this Agreement.

3. OSS RATES

3.1 The terms, conditions and rates for OSS utilized in connection with LNP are as set forth in Exhibit A of Attachment 2.

4. LNP IN CONJUNCTION WITH LOCAL SWITCHING

4.1 Where Neutral Tandem purchases local switching from BellSouth, the Parties shall adhere to the following processes:

4.2 When Neutral Tandem submits an LSR for services, if the telephone number associated with the services requested resides in a switch other than BellSouth's, then BellSouth will submit an LNP LSR to the appropriate switch owner. Neutral

Tandem shall be responsible for reimbursing BellSouth for any costs or charges imposed on BellSouth by the switch owner resulting from the submission of the LNP LSR. In addition, Neutral Tandem shall pay to BellSouth the manual service order charges specified in Exhibit A of Attachment 2 of this Agreement for BellSouth's creation and submission of the LNP LSR to the appropriate switch owner.

4.3 Working telephone numbers, telephone numbers for which payment has been made to reserve and telephone numbers that are in a denied state (but not disconnected) or suspended status may be subject to porting.

Attachment 6

Pre-Ordering, Ordering, Provisioning, Maintenance and Repair

TABLE OF CONTENTS

1. QUALITY OF PRE-ORDERING, ORDERING, PROVISIONING, MAINTENANCE AND REPAIR. 3

2. ACCESS TO OPERATIONS SUPPORT SYSTEMS 3

3. MISCELLANEOUS 7

PRE-ORDERING, ORDERING, PROVISIONING, MAINTENANCE AND REPAIR

1. QUALITY OF PRE-ORDERING, ORDERING, PROVISIONING, MAINTENANCE AND REPAIR

1.1 BellSouth shall provide to Neutral Tandem nondiscriminatory access to its Operations Support Systems (OSS) and the necessary information contained therein in order that Neutral Tandem can perform the functions of pre-ordering, ordering, provisioning, maintenance and repair, and billing. BellSouth shall provide Neutral Tandem with all relevant documentation (manuals, user guides, specifications, etc.) regarding business rules and other formatting information as well as practices and procedures necessary to ensure requests are efficiently processed. All documentation will be readily accessible at BellSouth's Interconnection Web site and is incorporated herein by reference. BellSouth shall ensure that its OSS are designed to accommodate requests for both current and projected demands of Neutral Tandem and other CLECs in the aggregate.

2. ACCESS TO OPERATIONS SUPPORT SYSTEMS

2.1 BellSouth shall provide Neutral Tandem nondiscriminatory access to its OSS and the necessary information contained therein in order that Neutral Tandem can perform the functions of pre-ordering, ordering, provisioning, maintenance and repair, and billing. BellSouth shall provide nondiscriminatory access to the OSS through manual and/or electronic interfaces as described in this Attachment. It is the sole responsibility of Neutral Tandem to obtain the technical capability to access and utilize BellSouth's OSS interfaces. Specifications for Neutral Tandem's access and use of BellSouth's electronic interfaces are set forth at BellSouth's Interconnection Web site and are incorporated herein by reference.

2.1.1 Neutral Tandem agrees to comply with the provisions of the Operations Support Systems (OSS) Interconnection Volume Guidelines as set forth at BellSouth's Interconnection Web site, and incorporated herein by reference as amended from time to time.

2.2 Pre-Ordering. BellSouth will provide electronic access to its OSS and the information contained therein in order that Neutral Tandem can perform the following pre-ordering functions: service address validation, telephone number selection, service and feature availability, due date information, customer record information and loop makeup information. Mechanized access is provided by electronic interfaces whose specifications for access and use are set forth at BellSouth's Interconnection Web site and are incorporated herein by reference. The process by which BellSouth and Neutral Tandem will manage these electronic interfaces to include the development and introduction of new interfaces will be

governed by the change management process as described in Section 2.6 below. Neutral Tandem shall provide to BellSouth access to customer record information, including circuit numbers associated with each telephone number where applicable. Neutral Tandem shall provide such information within four (4) hours after request via electronic access where available. If electronic access is not available, Neutral Tandem shall provide to BellSouth paper copies of customer record information, including circuit numbers associated with each telephone number where applicable. If BellSouth requests the information before noon, the customer record information shall be provided the same day. If BellSouth requests the information after noon, the customer record information shall be provided by noon the following day.

2.2.1 The Parties agree not to view, copy, or otherwise obtain access to the customer record information of any customer without that customer's permission. Neutral Tandem will obtain access to customer record information only in strict compliance with applicable laws, rules, or regulations of the state in which the service is provided. BellSouth reserves the right to audit Neutral Tandem's access to customer record information. If a BellSouth audit of Neutral Tandem's access to customer record information reveals that Neutral Tandem is accessing customer record information without having obtained the proper End User authorization, BellSouth upon reasonable notice to Neutral Tandem may take corrective action, including but not limited to suspending or terminating Neutral Tandem's electronic access to BellSouth's OSS functionality. All such information obtained through an audit shall be deemed Information covered by the Proprietary and Confidential Information section in the General Terms and Conditions of this Agreement.

2.3 Ordering. BellSouth will make available to Neutral Tandem electronic interfaces for the purpose of exchanging order information, including order status and completion notification, for non-complex and certain complex resale requests and certain network elements. Specifications for access and use of BellSouth's electronic interfaces are set forth at BellSouth's Interconnection Web site and are incorporated herein by reference as they are amended from time to time. The process by which BellSouth and Neutral Tandem will manage these electronic interfaces to include the development and introduction of new interfaces will be governed by the change management process as described below.

2.3.1 Neutral Tandem shall place orders for services by submitting a local service request ("LSR") to BellSouth. BellSouth shall bill Neutral Tandem an electronic service order charge at the rate set forth in the applicable Attachment to this Agreement for each LSR submitted by means of an electronic interface. BellSouth shall bill Neutral Tandem a manual service order charge at the rate set forth in the applicable Attachment to this Agreement for each LSR submitted by means other than the electronic Interfaces (e.g. mail, fax, courier, etc.). An individual LSR will be identified for billing purposes by its Purchase Order Number ("PON").

2.3.1.1 Neutral Tandem may submit an LSR to request that an End User's service be temporarily suspended, denied, or restored. Alternatively, Neutral Tandem may submit a list of such End Users if Neutral Tandem provides a separate PON for each location on the list. Each location will be billed as a separate LSR.

2.3.1.2 BellSouth will bill the electronic or manual service order charge, as applicable, for an LSR, regardless of whether that LSR is later supplemented, clarified or cancelled.

2.3.1.3 Notwithstanding the foregoing, BellSouth will not bill an additional electronic or manual service order charge for supplements to any LSR submitted to clarify, correct, change or cancel a previously submitted LSR.

2.4 Provisioning. BellSouth shall provision services during its regular working hours. To the extent Neutral Tandem requests provisioning of service to be performed outside BellSouth's regular working hours, or the work so requested requires BellSouth's technicians or project managers to work outside of regular working hours, overtime charges set forth in BellSouth's State E Tariff, Section 13.2, shall apply. Notwithstanding the foregoing, if such work is performed outside of regular working hours by a BellSouth technician or project manager during his or her scheduled shift and BellSouth does not incur any overtime charges in performing the work on behalf of Neutral Tandem, BellSouth will not assess Neutral Tandem additional charges beyond the rates and charges specified in this Agreement.

2.4.1 In the event BellSouth must dispatch to the End User's location more than once due to incorrect or incomplete information provided by Neutral Tandem (e.g., incomplete address, incorrect contact name/number, etc.), BellSouth will bill Neutral Tandem for each additional dispatch required to provision the circuit due to the incorrect/incomplete information provided. BellSouth will assess the applicable Maintenance of Service rates from BellSouth's FCC No. 1 Tariff, Section 13.3.1 (E).

2.4.2 Cancellation Charges. If Neutral Tandem cancels an LSR for network elements or resold services, any costs incurred by BellSouth in conjunction with the provisioning of that request will be recovered in accordance with BellSouth's Private Line Tariff or BellSouth's FCC No. 1 Tariff, Section 5.4.

2.4.2.1 Notwithstanding the foregoing, if Neutral Tandem places an LSR based upon BellSouth's loop makeup information, and such information is inaccurate resulting in the inability of BellSouth to provision the network elements requested and another spare compatible facility cannot be found with the transmission characteristics of the network elements originally requested, cancellation charges described in this Section shall not apply. Where Neutral Tandem places a single LSR for multiple network elements or services based upon loop makeup

information, and information as to some, but not all, of the network elements or services is inaccurate, if BellSouth cannot provision the network elements or services that were the subject of the inaccurate loop makeup information, Neutral Tandem may cancel its request for those network elements or services without incurring cancellation charges as described in this Section. In such instance, should Neutral Tandem elect to cancel the entire LSR, cancellation charges as described in this Section shall apply to those elements and services that were not the subject of inaccurate loop makeup.

2.4.3 Service Date Advancement Charges (Expedites). For Service Date Advancement requests by Neutral Tandem, Service Date Advancement charges will apply for intervals less than the standard interval as outlined in the BellSouth Product and Services Interval Guide. The charges as outlined in Exhibit A of Attachment 2 of this Agreement will apply.

2.4.4 Order Modification Charges. If Neutral Tandem modifies an order after being sent a Firm Order Confirmation (FOC) from BellSouth, the Order Modification Charge (OMC) or Order Modification Charge Additional Dispatch (OMCAD) will be paid by Neutral Tandem in accordance with Exhibit A of Attachment 2 of this Agreement.

2.5 Maintenance and Repair. BellSouth will make available to Neutral Tandem electronic interfaces for the purpose of reporting and monitoring service troubles. Specifications for access and use of BellSouth's maintenance and repair electronic interfaces are set forth at BellSouth's Interconnection Web site and are incorporated herein by reference. The process by which BellSouth and Neutral Tandem will manage these electronic interfaces to include the development and introduction of new interfaces will be governed by the change management process as described below. Requests for trouble repair are billed in accordance with the provisions of this Agreement. BellSouth and Neutral Tandem agree to adhere to BellSouth's Operational Understanding, as amended from time to time during this Agreement and as incorporated herein by reference. The Operational Understanding may be accessed via BellSouth's Interconnection Web site.

2.5.1 If Neutral Tandem reports a trouble on a Network Element or Other Service and no trouble actually exists on the BellSouth portion, BellSouth will charge Neutral Tandem for any dispatching and testing (both inside and outside the Central Office (CO)) required by BellSouth in order to confirm the working status.

2.5.2 In the event BellSouth must dispatch to the End User's location more than once due to incorrect or incomplete information provided by Neutral Tandem (e.g., incomplete address, incorrect contact name/number, etc.), BellSouth will bill Neutral Tandem for each additional dispatch required to repair the circuit due to the incorrect/incomplete information provided. BellSouth will assess the

applicable Maintenance of Service rates from BellSouth's FCC No. 1 Tariff, Section 13.3.1 (E).

2.6 Billing. BellSouth will provide Neutral Tandem nondiscriminatory access to billing information as specified in Attachment 7 to this Agreement.

2.7 Change Management. BellSouth and Neutral Tandem agree that the collaborative change management process known as the Change Control Process (CCP) will be used to manage changes to existing interfaces, introduction of new interfaces and retirement of interfaces. BellSouth and Neutral Tandem agree to comply with the provisions of the documented Change Control Process as may be amended from time to time and incorporated herein by reference. The change management process will cover changes to BellSouth's electronic interfaces, BellSouth's testing environment, associated manual process improvements, and relevant documentation. The process will define a procedure for resolution of change management disputes. Documentation of the CCP as well as related information and processes will be clearly organized and readily accessible to Neutral Tandem at BellSouth's Interconnection Web site.

2.8 Rates. Unless otherwise specified herein, charges for the use of BellSouth's Operations Support Systems (OSS), and other charges applicable to pre-ordering, ordering, provisioning and maintenance and repair, shall be at the rates set forth in the applicable Attachment of this Agreement.

2.9 The Commissions in some states have ordered per element manual additive nonrecurring charges (NRC) for Network Elements and Other Services ordered by means other than one of the interactive interfaces. These ordered Network Elements and Other Services manual additive NRCs will apply in these states, rather than the charge per LSR. The per element charges are listed in Exhibit A of Attachment 2.

3. MISCELLANEOUS

3.1 Pending Orders. To the extent that Neutral Tandem submits an LSR with incomplete, incorrect or conflicting information, BellSouth will return the LSR to Neutral Tandem for clarification. Neutral Tandem shall respond to the request for clarification within thirty (30) days by submitting a supplemental LSR. If Neutral Tandem does not submit a supplement LSR within thirty (30) days, BellSouth will cancel the original LSR and Neutral Tandem shall be required to submit a new LSR, with a new PON.

3.2 Single Point of Contact. Neutral Tandem will be the single point of contact with BellSouth for ordering activity for network elements and other services used by Neutral Tandem to provide services to its End Users, except that BellSouth may accept a request directly from another CLEC, or BellSouth, acting with authorization of the affected End User. Neutral Tandem and BellSouth shall each

execute a blanket letter of authorization with respect to customer requests so that prior proof of End User authorization will not be necessary with every request (except in the case of a local service freeze). The Parties shall each be entitled to adopt their own internal processes for verification of customer authorization for requests, provided, however, that such processes shall comply with applicable state and federal law and industry and regulatory guidelines. Pursuant to a request from another carrier, BellSouth may disconnect any network element being used by Neutral Tandem to provide service to that End User and may reuse such network elements or facilities to enable such other carrier to provide service to the End User. BellSouth will notify Neutral Tandem that such a request has been processed but will not be required to notify Neutral Tandem in advance of such processing.

3.2.1 Neither BellSouth nor Neutral Tandem shall prevent or delay an End User from migrating to another carrier because of unpaid bills, denied service, or contract terms.

3.2.2 The Parties shall return a Firm Order Confirmation (FOC) and Local Service Request (LSR) rejection/clarification in accordance with the intervals specified in Attachment 9 of this Agreement.

3.2.3 Use of Facilities. When an End User of Neutral Tandem elects to discontinue service and to transfer service to another local exchange carrier, including BellSouth, BellSouth shall have the right to reuse the facilities provided to Neutral Tandem by BellSouth. In addition, where BellSouth provides local switching, BellSouth may disconnect and reuse facilities when the facility is in a denied state and BellSouth has received a request to establish new service or transfer service from an End User or from a CLEC. BellSouth will notify Neutral Tandem that such a request has been processed after the disconnect order has been completed.

3.3 Contact Numbers. The Parties agree to provide one another with toll-free nation-wide (50 states) contact numbers for the purpose of ordering, provisioning and maintenance of services. Contact numbers for maintenance/repair of services shall be staffed 24 hours per day, 7 days per week. BellSouth will close trouble tickets after making a reasonable effort to contact Neutral Tandem for authorization to close a ticket. BellSouth will place trouble tickets in delayed maintenance status after making a reasonable effort to contact Neutral Tandem to request additional information or to request authorization for additional work deemed necessary by BellSouth.

3.4 Subscription Functions. In cases where BellSouth performs subscription functions for an interexchange carrier (IXC) (i.e. PIC and LPIC changes via Customer Account Record Exchange (CARE)), BellSouth will in all possible instances provide the affected IXCs with the Operating Company Number (OCN) of the

local provider for the purpose of obtaining End User billing account and other End User information required under subscription requirements.

3.4.1 When Neutral Tandem's End User, served by resale or loop and port combinations, changes its PIC or LPIC, and per BellSouth's FCC or state tariff the interexchange carrier elects to charge the End User the PIC or LPIC change charge, BellSouth will bill the PIC or LPIC change charge to Neutral Tandem, which has the billing relationship with that End User, and Neutral Tandem may pass such charge to the End User.

Attachment 7

Billing

TABLE OF CONTENTS

1. PAYMENT AND BILLING ARRANGEMENTS 3

2. BILLING DISPUTES 9

3. REVENUE ACCOUNTING OFFICE (RAO) HOSTING 10

Rates…….Exhibit A

BILLING

1. PAYMENT AND BILLING ARRANGEMENTS

The terms and conditions set forth in this Attachment shall apply to all services ordered and provisioned pursuant to this Agreement.

1.1 BellSouth will bill through the Carrier Access Billing System (CABS), Integrated Billing System (IBS) and/or the Customer Records Information Systems (CRIS) depending on the particular service(s) provided to Neutral Tandem under this Agreement. BellSouth will format all bills in CABS Billing Output Specification (CBOS) Standard or CLUB/EDI format, depending on the type of service provided. For those services where standards have not yet been developed, BellSouth's billing format may change in accordance with applicable industry standards.

1.1.1 For any service(s) BellSouth receives from Neutral Tandem, Neutral Tandem shall bill BellSouth in CBOS format.

1.1.2 Any switched access charges associated with interexchange carrier access to the resold local exchange lines will be billed by, and due to BellSouth.

1.1.3 BellSouth will render bills each month on established bill days for each of Neutral Tandem's accounts. If either Party requests multiple billing media or additional copies of the bills, the billing Party will provide these at the rates set forth in BellSouth's FCC No. 1 Tariff, Section 13.3.6.3, except for resold services which shall be at the rates set forth in BellSouth's Non-Regulated Services Pricing List N6.

1.1.4 BellSouth will bill Neutral Tandem in advance for all services to be provided during the ensuing billing period except charges associated with service usage and nonrecurring charges, which will be billed in arrears.

1.1.4.1 For resold services, charges for services will be calculated on an individual End User account level, including, if applicable, any charge for usage or usage allowances. BellSouth will also bill Neutral Tandem, and Neutral Tandem will be responsible for and remit to BellSouth, all charges applicable to said services including but not limited to 911 and E911 charges, End Users common line charges, federal subscriber line charges, telecommunications relay charges, and franchise fees, unless otherwise ordered by a Commission.

1.1.5 BellSouth will not perform billing and collection services for Neutral Tandem as a result of the execution of this Agreement.

1.2 Establishing Accounts. After submitting a credit profile and deposit, if required, and after receiving certification as a local exchange carrier from the appropriate Commission, Neutral Tandem will provide the appropriate BellSouth advisory

team/local contract manager the necessary documentation to enable BellSouth to establish accounts for Local Interconnection, Network Elements and Other Services and/or resold services. Such documentation shall include the Application for Master Account, if applicable, proof of authority to provide telecommunications services, the appropriate Operating Company Numbers (OCN) for each state as assigned by the National Exchange Carriers Association (NECA), Carrier Identification Code (CIC), if applicable, Access Customer Name and Abbreviation (ACNA), if applicable, Blanket Letter of Authorization (LOA), Misdirected Number form, and a tax exemption certificate, if applicable. Notwithstanding anything to the contrary in this Agreement, Neutral Tandem may not order services under a new account established in accordance with this Section 1.2 until thirty (30) days after all information specified in this Section 1.2 is received from Neutral Tandem.

1.2.1 Company Identifiers. If Neutral Tandem needs to change, add to, eliminate or convert its OCN(s), ACNAs and other identifying codes (collectively "Company Identifiers") under which it operates when Neutral Tandem has already been conducting business utilizing those Company Identifiers, Neutral Tandem shall pay all charges as a result of such change, addition, elimination or conversion to the new Company Identifiers. Such charges include, but are not limited to, all time required to make system updates to all of Neutral Tandem's End User records and any other changes to BellSouth systems or Neutral Tandem records, and will be handled in a separately negotiated agreement or as otherwise required by BellSouth.

1.2.2 Tax Exemption. It is the responsibility of Neutral Tandem to provide BellSouth with a properly completed tax exemption certificate at intervals required by the appropriate taxing authorities. A tax exemption certificate must be supplied for each individual Neutral Tandem entity purchasing Services under this Agreement. Upon BellSouth's receipt of a properly completed tax exemption certificate, subsequent billings to Neutral Tandem will not include those taxes or fees from which Neutral Tandem is exempt. Prior to receipt of a properly completed exemption certificate, BellSouth shall bill, and Neutral Tandem shall pay all applicable taxes and fees. In the event that Neutral Tandem believes that it is entitled to an exemption from and refund of taxes with respect to the amount billed prior to BellSouth's receipt of a properly completed exemption certificate, BellSouth shall assign to Neutral Tandem its rights to claim a refund of such taxes. If applicable law prohibits the assignment of tax refund rights or requires the claim for refund of such taxes to be filed by BellSouth, BellSouth shall, after receiving a written request from Neutral Tandem and at Neutral Tandem's sole expense, pursue such refund claim on behalf of Neutral Tandem, provided that Neutral Tandem promptly reimburses BellSouth for any costs and expenses incurred by BellSouth in pursuing such refund claim, and provided further that BellSouth shall have the right to deduct any such outstanding costs and expenses from the amount of any refund obtained prior to remitting such refund to Neutral Tandem. Neutral Tandem shall be solely responsible for the computation, tracking, reporting and

payment of all taxes and fees associated with the services provided by Neutral Tandem to its End Users.

1.3 Deposit Policy. Prior to the inauguration of service or, thereafter, upon BellSouth's request, Neutral Tandem shall complete the BellSouth Credit Profile (BellSouth form) and provide information to BellSouth regarding Neutral Tandem's credit and financial condition. Based on BellSouth's analysis of the BellSouth Credit Profile and other relevant information regarding Neutral Tandem's credit and financial condition, BellSouth reserves the right to require Neutral Tandem to provide BellSouth with a suitable form of security deposit for Neutral Tandem's account(s). If, in BellSouth's sole discretion, circumstances so warrant and/or Neutral Tandem's gross monthly billing has increased, BellSouth reserves the right to request additional security (or to require a security deposit if none was previously requested) and/or file a Uniform Commercial Code (UCC-1) security interest in Neutral Tandem's "accounts receivables and proceeds".

1.3.1 Security deposit shall take the form of cash, an Irrevocable Letter of Credit (BellSouth form), Surety Bond (BellSouth form) or, in BellSouth's sole discretion, some other form of security proposed by Neutral Tandem. Any such security deposit shall in no way release Neutral Tandem from its obligation to make complete and timely payments of its bill(s). If BellSouth requires Neutral Tandem to provide a security deposit, Neutral Tandem shall provide such security deposit prior to the inauguration of service or within fifteen (15) days of BellSouth's request, as applicable. Deposit request notices will be sent to Neutral Tandem via certified mail or overnight delivery. Such notice period will start the day after the deposit request notice is rendered by certified mail or overnight delivery. Interest on a cash security deposit shall accrue and be applied or refunded in accordance with the terms in BellSouth's General Subscriber Services Tariff (GSST).

1.3.2 Security deposits collected under this Section 1.3 shall not exceed two (2) months' estimated billing. Estimated billings are calculated based upon the monthly average of the previous six (6) months current billings, if Neutral Tandem has received service from BellSouth during such period at a level comparable to that anticipated to occur over the next six (6) months. If either Neutral Tandem or BellSouth has reason to believe that the level of service to be received during the next six (6) months will be materially higher or lower than received in the previous six (6) months, Neutral Tandem and BellSouth shall agree on a level of estimated billings based on all relevant information.

1.3.3 In the event Neutral Tandem fails to provide BellSouth with a suitable form of security deposit or additional security deposit as required herein, defaults on its account(s), or otherwise fails to make any payment or payments required under this Agreement in the manner and within the time required, service to Neutral Tandem may be Suspended, Discontinued or Terminated in accordance with the terms of Section 1.5 below. Upon Termination of services, BellSouth shall apply any security deposit to Neutral Tandem's final bill for its account(s).

1.3.3.1 At least seven (7) days prior to the expiration of any letter of credit provided by Neutral Tandem as security under this Agreement, Neutral Tandem shall renew such letter of credit or provide BellSouth with evidence that Neutral Tandem has obtained a suitable replacement for the letter of credit. If Neutral Tandem fails to comply with the foregoing, BellSouth shall thereafter be authorized to draw down the full amount of such letter of credit and utilize the cash proceeds as security for Neutral Tandem accounts(s). If Neutral Tandem provides a security deposit or additional security deposit in the form of a surety bond as required herein, Neutral Tandem shall renew the surety bond or provide BellSouth with evidence that Neutral Tandem has obtained a suitable replacement for the surety bond at least seven (7) days prior to the cancellation date of the surety bond. If Neutral Tandem fails to comply with the foregoing, BellSouth shall thereafter be authorized to take action on the surety bond and utilize the cash proceeds as security for Neutral Tandem's account(s). If the credit rating of any bonding company that has provided Neutral Tandem with a surety bond provided as security hereunder has fallen below B, BellSouth will provide written notice to Neutral Tandem that Neutral Tandem must provide a replacement bond or other suitable security within fifteen (15) days of BellSouth's written notice. If Neutral Tandem fails to comply with the foregoing, BellSouth shall thereafter be authorized to take action on the surety bond and utilize the cash proceeds as security for Neutral Tandem's account(s). Notwithstanding anything contained in this Agreement to the contrary, BellSouth shall be authorized to draw down the full amount of any letter of credit or take action on any surety bond provided by Neutral Tandem as security hereunder if Neutral Tandem defaults on its account(s) or otherwise fails to make any payment or payments required under this Agreement in the manner and within the time, as required herein.

1.4 Payment Responsibility. Payment of all charges will be the responsibility of Neutral Tandem. Neutral Tandem shall pay invoices by utilizing wire transfer services or automatic clearing house services. Neutral Tandem shall make payment to BellSouth for all services billed including disputed amounts. BellSouth will not become involved in billing disputes that may arise between Neutral Tandem and Neutral Tandem's End User.

1.4.1 Payment Due. Payment for services provided by BellSouth, including disputed charges, is due on or before the next bill date. Information required to apply payments must accompany the payment. The information must notify BellSouth of Billing Account Numbers (BAN) paid; invoices paid and the amount to be applied to each BAN and invoice (Remittance Information). Payment is considered to have been made when the payment and Remittance Information are received by BellSouth. If the Remittance Information is not received with payment, BellSouth will be unable to apply amounts paid to Neutral Tandem's accounts. In such event, BellSouth shall hold such funds until the Remittance Information is received. If BellSouth does not receive the Remittance Information by the payment due date for any account(s), late payment charges shall apply.

1.4.1.1 Due Dates. If the payment due date falls on a Sunday or on a holiday that is observed on a Monday, the payment due date shall be the first non-holiday day following such Sunday or holiday. If the payment due date falls on a Saturday or on a holiday which is observed on Tuesday, Wednesday, Thursday, or Friday, the payment due date shall be the last non-holiday day preceding such Saturday or holiday. If payment is not received by the payment due date, a late payment charge, as set forth in Section 1.4.1.2, below, shall apply.

1.4.1.2 Late Payment. If any portion of the payment is not received by BellSouth on or before the payment due date as set forth preceding, or if any portion of the payment is received by BellSouth in funds that are not immediately available to BellSouth, then a late payment and/or interest charge shall be due to BellSouth. The late payment and/or interest charge shall apply to the portion of the payment not received and shall be assessed as set forth in Section A2 of the General Subscriber Services Tariff, Section B2 of the Private Line Service Tariff or Section E2 of the Intrastate Access Tariff, or pursuant to the applicable state law as determined by BellSouth. In addition to any applicable late payment and/or interest charges, Neutral Tandem may be charged a fee for all returned checks at the rate set forth in Section A2 of the General Subscriber Services Tariff or pursuant to the applicable state law.

1.5 Discontinuing Service to Neutral Tandem. The procedures for discontinuing service to Neutral Tandem are as follows:

1.5.1 In order of severity, Suspend/Suspension, Discontinue/Discontinuance and Terminate/Termination are defined as follows for the purposes of this Attachment:

1.5.1.1 Suspend/Suspension is the temporary restriction of the billed Party's access to the ordering systems and/or access to the billed Party's ability to initiate PIC-related changes. In addition, during Suspension, pending orders may not be completed and orders for new service or changes to existing services may not be accepted.

1.5.1.2 Discontinue/Discontinuance is the denial of service by the billing Party to the billed Party that will result in the disruption and discontinuation of service to the billed Party's End Users or customers. Additionally, at the time of Discontinuance, BellSouth will remove any Local Service Freezes in place on the billed Party's End Users.

1.5.1.3 Terminate/Termination is the disconnection of service by the billing Party to the billed Party.

1.5.2 BellSouth reserves the right to Suspend, Discontinue or Terminate service in the event of prohibited, unlawful or improper use of BellSouth facilities or service, abuse of BellSouth facilities, or any other violation or noncompliance by Neutral Tandem of the rules and regulations of BellSouth's tariffs.

1.5.3 Suspension. If payment of amounts due as described herein is not received by the bill date in the month after the original bill date, or fifteen (15) days from the date of a deposit request in the case of security deposits, BellSouth will provide written notice to Neutral Tandem that services will be Suspended if payment of such amounts, and all other amounts that become past due before Suspension, is not received by wire transfer, automatic clearing house or cashier's check in the manner set forth in Section 1.4.1 above, or in the case of a security deposit request, in the manner set forth in Section 1.3.1: (1) within seven (7) days following such notice for CABS billed services; (2) within fifteen (15) days following such notice for CRIS and IBS billed services; and (3) within seven (7) days following such notice for security deposit requests.

1.5.3.1 The Suspension notice shall also provide that all past due charges for CRIS and IBS billed services, and all other amounts that become past due for such services before Discontinuance, , must be paid within thirty (30) days from the date of the Suspension notice to avoid Discontinuance of CRIS and IBS billed services.

1.5.3.2 For CABS billed services, BellSouth will provide a Discontinuance notice that is separate from the Suspension notice, that all past due charges for CABS billed Services, and all other amounts that become past due for such services before Discontinuance, must be paid within thirty (30) days from the date of the Suspension notice to avoid Discontinuance of CABS billed services. This Discontinuance notice may be provided at the same time that BellSouth provides the Suspension notice.

1.5.4 Discontinuance. If payment of amounts due as described herein is not received by the bill date in the month after the original bill date, BellSouth will provide written notice that BellSouth may Discontinue the provision of existing services to Neutral Tandem if payment of such amounts, and all other amounts that become past due before Discontinuance, including requested security deposits, is not received by wire transfer, automatic clearing house or cashier's check in the manner set forth in Section 1.4.1 above or in the case of a deposit in accordance with Section 1.3.1, within thirty (30) days following such written notice; provided, however, that BellSouth may provide written notice that such existing services may be Discontinued within fifteen (15) days following such notice, subject to the criteria described in Section 1.5.5.

1.5.5 BellSouth may take the action to Discontinue the provision of existing service upon fifteen (15) days from the day after BellSouth provides written notice of such Discontinuance if (a) such notice is sent by certified mail or overnight delivery; (b) Neutral Tandem has not paid all amounts due pursuant to a subject bill(s), or has not provided adequate security pursuant to a deposit request; and (c) either:

(1) BellSouth has sent the subject bill(s) to Neutral Tandem within (7) business days of the bill date(s), verifiable by records maintained by BellSouth:

i. in paper or CDROM form via the United States Postal Service (USPS), or
ii. in magnetic tape form via overnight delivery, or
iii. via electronic transmission; or

(2) BellSouth has sent the subject bill(s) to Neutral Tandem, using one of the media described in (1) above, more than thirty (30) days before notice to Discontinue service has been rendered.

1.5.6 In the case of Discontinuance of services, all billed charges, as well as applicable disconnect charges, shall become due.

1.5.7 Neutral Tandem is solely responsible for notifying the End User of the Discontinuance of service. If, within seven (7) days after Neutral Tandem's services have been Discontinued, Neutral Tandem pays, by wire transfer, automatic clearing house or cashier's check, all past due charges, including late payment charges, outstanding security deposit request amounts if applicable and any applicable restoral charges as set forth in Section A4 of the GSST, then BellSouth will reestablish service for Neutral Tandem.

1.5.7.1 Termination. If within seven (7) days after Neutral Tandem's service has been Discontinued and Neutral Tandem has failed to pay all past due charges as described above, then Neutral Tandem's service will be Terminated.

1.6 Notices. Notwithstanding anything to the contrary in this Agreement, all bills and notices regarding billing matters, disconnection of services for nonpayment of charges, and rejection of additional orders from Neutral Tandem, shall be forwarded to the individual and/or address provided by Neutral Tandem in establishment of its billing account(s) with BellSouth, or to the individual and/or address subsequently provided by Neutral Tandem as the contact for billing. All monthly bills and notices described in this Section shall be forwarded to the same individual and/or address; provided, however, upon written request from Neutral Tandem to BellSouth's billing organization, the notice of discontinuance of services purchased by Neutral Tandem under this Agreement provided for in Section 1.5.4 of this Attachment shall be sent via certified mail to the individual(s) listed in the Notices provision of the General Terms and Conditions of this Agreement.

2. BILLING DISPUTES

2.1 Neutral Tandem shall electronically submit all billing disputes to BellSouth using the form specified by BellSouth. In the event of a billing dispute, the Parties will endeavor to resolve the dispute within sixty (60) days of the notification date. Within five (5) business days of BellSouth's denial, or partial denial, of the billing dispute, if Neutral Tandem is not satisfied with BellSouth's resolution of the billing dispute or if no response to the billing dispute has been received by Neutral

Tandem by such sixtieth (60th) day, Neutral Tandem must pursue the escalation process as outlined in the Billing Dispute Escalation Matrix, set forth on BellSouth's Interconnection Services Web site, or the billing dispute shall be considered denied and closed. If, after escalation, the Parties are unable to reach resolution, then the aggrieved Party, if it elects to pursue the dispute shall pursue dispute resolution in accordance with the General Terms and Conditions of this Agreement.

2.2 For purposes of this Section 2, a billing dispute means a reported dispute submitted pursuant to Section 2.1 of a specific amount of money actually billed by BellSouth. The billing dispute must be clearly explained by Neutral Tandem and supported by written documentation, which clearly shows the basis for disputing charges. The determination as to whether the billing dispute is clearly explained or clearly shows the basis for disputing charges shall be within BellSouth's sole reasonable discretion. Disputes that are not clearly explained or those that do not provide complete information may be rejected by BellSouth. Claims by Neutral Tandem for damages of any kind will not be considered a billing dispute for purposes of this Section. If BellSouth resolves the billing dispute, in whole or in part, in favor of Neutral Tandem, any credits and interest due to Neutral Tandem as a result therof shall be applied to Neutral Tandem's account by BellSouth upon resolution of the billing dispute.

3. REVENUE ACCOUNTING OFFICE (RAO) HOSTING

3.1 Centralized Message Distribution System (CMDS) is a national message exchange system administered by Telcordia Technologies ("Telcordia") used to transmit alternately billed calls (e.g., credit card, third number and collect) from the Earning Company, as defined herein, to the Billing Company, as defined herein, to permit the Earning Company and the Billing Company to receive appropriate compensation. It is also used to transmit access records from one company to another.

3.2 Direct Participants are Telecommunications carriers that exchange data directly with other Direct Participants via the CMDS Data Center and may act as host companies ("Host") for those Telecommunications carriers that do not exchange data directly via the CMDS Data Center ("Indirect Participants").

3.3 Revenue Accounting Office (RAO) Hosting is a hosting relationship where an Indirect Participant sends and receives CMDS eligible messages to and from its Host, who then interfaces, on behalf of the Indirect Participant, with other Direct Participants for distribution and collection of these messages. RAO Hosting also includes the Direct Participant's provision of revenue settlements functions (compensation) for alternately billed calls based upon reports generated by Credit Card and Third Number Settlement (CATS) and Non-InterCompany Settlement (NICS) as described herein. CATS and NICS are collectively referred to as Intercompany Settlements.

3.4 The CATS System is a national system administered by Telcordia, used to settle revenues for calls that are sent from one CMDS Direct Participant to another for billing. CATS applies to calls that originate within one Regional Bell Operating Company's (RBOC) territory, as defined at Divestiture, and bill in another RBOC's territory. CATS calculates the amounts due to Earning Companies (i.e. billed revenue less the billing and collection fee). For alternately billed calls, the originating company, whose facilities are used to place the call, is the Earning Company and the company that puts the charges on the End User's bill is the Billing Company

3.5 The Non-InterCompany Settlement (NICS) System is the national system administered by Telcordia that is used in the settlement of revenues for calls that are originated and billed by two different local exchange carriers (LEC) within a single Direct Participant's territory to another for billing. NICS applies to calls involving another LEC where the Earning Company and the Billing Company are located within BellSouth's territory.

3.6 RAO Hosting, CATS and NICS services provided to Neutral Tandem by BellSouth will be in accordance with the methods and practices regularly applied by BellSouth to its own operations during the term of this Agreement, including such revisions as may be made from time to time by BellSouth.

3.7 Neutral Tandem shall furnish all relevant information required by BellSouth for the provision of RAO Hosting, CATS and NICS.

3.8 Charges or credits, as applicable, will be applied by BellSouth to Neutral Tandem on a monthly basis in arrears. Amounts due (excluding adjustments) are due on or before the next bill date.

3.9 Neutral Tandem must have its own unique hosted RAO code. Where BellSouth is the selected CMDS interfacing host, Neutral Tandem must request that BellSouth establish a unique hosted RAO code for Neutral Tandem. Such request shall be in writing to the BellSouth RAO Hosting coordinator and must be submitted at least eight (8) weeks prior to provision of services pursuant to this Section. Services shall commence on a date mutually agreed by the Parties.

3.10 BellSouth will receive messages from Neutral Tandem that are to be processed by BellSouth, another Local Exchange Carrier (LEC) in the BellSouth region or a LEC outside the BellSouth region. Neutral Tandem shall send all messages to BellSouth no later than sixty (60) days after the message date.

3.11 BellSouth will perform invoice sequence checking, standard Exchange Message Interface (EMI) format editing, and balancing of message data with the EMI trailer record counts on all data received from Neutral Tandem.

3.12 All data received from Neutral Tandem that is to be processed or billed by another LEC within the BellSouth region will be distributed to that LEC in accordance with the Agreement(s) in effect between BellSouth and the involved LEC.

3.13 All data received from Neutral Tandem that is to be placed on the CMDS network for distribution outside the BellSouth region will be handled in accordance with the agreement(s) in effect between BellSouth and its connecting contractor.

3.14 BellSouth will receive messages from the CMDS network that are destined to be processed by Neutral Tandem and will forward them to Neutral Tandem on a daily basis for processing.

3.15 Transmission of message data between BellSouth and Neutral Tandem will be distributed via Secure File Transfer Protocol (FTP) mailbox. It will be created on a daily basis Monday through Friday, except holidays. Details such as dataset name and delivery schedule will be addressed during negotiations of the distribution medium. If BellSouth determines the Secure FTP Mailbox is nearing capacity levels, BellSouth may move Neutral Tandem to CONNECT:Direct file delivery.

3.15.1 If Neutral Tandem is moved to CONNECT:Direct, data circuits (private line or dial-up) may be required between BellSouth and Neutral Tandem for the purpose of data transmission. Where a dedicated line is required, Neutral Tandem will be responsible for ordering the circuit, overseeing its installation and coordinating the installation with BellSouth. Neutral Tandem will also be responsible for any charges associated with this line. Equipment required on the BellSouth end to attach the line to the mainframe computer and to transmit successfully ongoing will be negotiated on an individual case basis. Where a dial-up facility is required, dial circuits will be installed in the BellSouth data center by BellSouth and the associated charges assessed to Neutral Tandem. Additionally, all message toll charges associated with the use of the dial circuit by Neutral Tandem will be the responsibility of Neutral Tandem. Associated equipment on the BellSouth end, including a modem, will be negotiated on an individual case basis between the Parties. All equipment, including modems and software, that is required on the Neutral Tandem end for the purpose of data transmission will be the responsibility of Neutral Tandem.

3.15.2 If Neutral Tandem utilizes Secure File Transfer Protocol for data file transmission, purchase of the Secure File Transfer Protocol software will be the responsibility of Neutral Tandem.

3.16 All messages and related data exchanged between BellSouth and Neutral Tandem will be EMI formatted records and packed between appropriate EMI header and trailer records in accordance with accepted industry standards.

3.17 Neutral Tandem will maintain recorded message detail necessary to recreate files provided to BellSouth for a period of three (3) calendar months beyond the related message dates.

3.18 Should it become necessary for Neutral Tandem to send data to BellSouth more than sixty (60) days past the message date(s), Neutral Tandem will notify BellSouth in advance of the transmission of the data. BellSouth will work with its connecting contractor and/or Neutral Tandem, where necessary, to notify all affected LECs.

3.19 In the event that data to be exchanged between the two Parties should become lost or destroyed, the Party responsible for creating the data will make every effort to restore and retransmit such data.

3.20 Should an error be detected by the EMI format edits performed by BellSouth on data received from Neutral Tandem, the entire pack containing the affected data will not be processed by BellSouth. BellSouth will notify Neutral Tandem of the error. Neutral Tandem will correct the error(s) and will resend the entire pack to BellSouth for processing. In the event that an out-of-sequence condition occurs on subsequent packs, Neutral Tandem will resend these packs to BellSouth after the pack containing the error has been successfully reprocessed by BellSouth.

3.21 In association with message distribution service, BellSouth will provide Neutral Tandem with associated intercompany settlements reports (CATS and NICS) as appropriate.

3.22 Notwithstanding anything in this Agreement to the contrary, in no case shall either Party be liable to the other for any direct or consequential damages incurred as a result of the obligations set out in this Section 3.

3.23 Intercompany Settlements Messages

3.23.1 Intercompany Settlements Messages facilitate the settlement of revenues associated with traffic originated from or billed by Neutral Tandem as a facilities based provider of local exchange telecommunications services.

3.23.2 BellSouth will receive the monthly NICS and CATS reports from Telcordia on behalf of Neutral Tandem and will distribute copies of these reports to Neutral Tandem on a monthly basis.

3.23.3 Through CATS, BellSouth will collect the revenue earned by Neutral Tandem from the RBOC in whose territory the messages are billed, less a per message billing and collection fee of five cents ($0.05), or such other amount as may be approved by the Direct Participants and Telcordia, on behalf of Neutral Tandem. BellSouth will remit the revenue billed by Neutral Tandem to the RBOC in whose territory the messages originated, less a per message billing and collection fee of five cents ($0.05), or such other amount as may be approved by the Direct

Participants and Telcordia, on behalf of Neutral Tandem. These two amounts will be netted together by BellSouth and the resulting charge or credit issued to Neutral Tandem via a Carrier Access Billing System (CABS) miscellaneous bill on a monthly basis in arrears.

3.23.4 Through NICS, BellSouth will collect the revenue earned by Neutral Tandem within the BellSouth territory from another LEC also within the BellSouth territory (NICS) where the messages are billed, less a per message billing and collection fee of five cents ($0.05), on behalf of Neutral Tandem. BellSouth will remit the revenue billed by Neutral Tandem within the BellSouth region to the LEC also within the BellSouth region, where the messages originated, less a per message billing and collection fee of five cents ($0.05). These two amounts will be netted together by BellSouth and the resulting charge or credit issued to Neutral Tandem via a CABS miscellaneous bill on a monthly basis in arrears.

3.23.5 BellSouth and Neutral Tandem agree that monthly netted amounts of less than fifty dollars ($50.00) will not be settled.

3.24 Rates. Rates for Centralized Message Distribution System (CMDS) are set out in Exhibit A to this Attachment. If no rate is identified in this Attachment, the rate for the specific service or function will be as set forth in the applicable BellSouth tariff or as negotiated by the Parties upon request by either Party.

CMDS - Florida															Attachment: 7		Exhibit: A	
CATEGORY		RATE ELEMENTS	Interim	Zone	BCS	USOC	RATES($)					Svc Order Submitted Elec per LSR	Svc Order Submitted Manually per LSR	Incremental Charge - Manual Svc Order vs. Electronic-1st	Incremental Charge - Manual Svc Order vs. Electronic-Add'l	Incremental Charge - Manual Svc Order vs. Electronic-Disc 1st	Incremental Charge - Manual Svc Order vs. Electronic-Disc Add'l
							Rec	Nonrecurring		Nonrecurring Disconnect		OSS Rates($)					
								First	Add'l	First	Add'l	SOMEC	SOMAN	SOMAN	SOMAN	SOMAN	SOMAN
CMDS																	
	CENTRALIZED MESSAGE DISTRIBUTION SERVICE (CMDS)																
		CMDS: Message Processing, per message					0.004										
		CMDS: Data Transmission (CONNECT:Direct), per message					0.001										

CMDS - Georgia																		Attachment: 7		Exhibit: A	
CATEGORY		RATE ELEMENTS	Interim	Zone	BCS	USOC	RATES($)						Svc Order Submitted Elec per LSR	Svc Order Submitted Manually per LSR	Incremental Charge - Manual Svc Order vs. Electronic-1st	Incremental Charge - Manual Svc Order vs. Electronic-Add'l	Incremental Charge - Manual Svc Order vs. Electronic-Disc 1st	Incremental Charge - Manual Svc Order vs. Electronic-Disc Add'l
							Rec	Nonrecurring		Nonrecurring Disconnect		OSS Rates($)							
								First	Add'l	First	Add'l	SOMEC	SOMAN	SOMAN	SOMAN	SOMAN	SOMAN
CMDS																		
	CENTRALIZED MESSAGE DISTRIBUTION SERVICE (CMDS)																	
		CMDS: Message Processing, per message					0.004											
		CMDS: Data Transmission (CONNECT:Direct), per message					0.001											

Attachment 8

Rights-of-Way, Conduits and Pole Attachments

Rights-of-Way, Conduits and Pole Attachments

BellSouth will provide nondiscriminatory access to any pole, duct, conduit, or right-of-way owned or controlled by BellSouth pursuant to 47 U.S.C. § 224, as amended by the Act, pursuant to terms and conditions of a separate license agreement negotiated with BellSouth.

Attachment 9

Performance Measurements

PERFORMANCE MEASUREMENTS

Upon a particular Commission's issuance of an Order pertaining to Performance Measurements in a proceeding expressly applicable to all CLECs generally, BellSouth shall implement in that state such Performance Measurements as of the date specified by the Commission. Performance Measurements that have been Ordered in a particular state can currently be accessed via the internet at http://pmap.bellsouth.com.

The following Service Quality Measurements (SQM) plan as it presently exists and as it may be modified in the future, is being included as the performance measurements currently in place for the state of Tennessee. At such time that the TRA issues a subsequent Order pertaining to Performance Measurements, such Performance Measurements shall supersede the SQM contained in the Agreement.

BELLSOUTH®

BellSouth Service Quality Measurement Plan (SQM)

Tennessee Performance Metrics

Measurement Descriptions
Version 2.00

Issue Date: July 1, 2003

Introduction

The BellSouth Service Quality Measurement Plan (SQM) describes in detail the measurements produced to evaluate the quality of service delivered to BellSouth's customers both wholesale and retail. The SQM was developed to respond to the requirements of the Communications Act of 1996 Section 251 (96 Act) which required BellSouth to provide non-discriminatory access to Competitive Local Exchange Carriers (CLEC)[1] and their Retail Customers. The reports produced by the SQM provide regulators, CLECs and BellSouth the information necessary to monitor the delivery of non-discriminatory access.

This plan results from the many divergent forces evolving from the 96 Act. The 96 Act, the Georgia Public Service Commission (GPSC) Order (Docket 7892-U 12/30/97), LCUG 1-7.0, the FCC's NPRM (CC Docket 98-56 RM9101 04/17/98), the Louisiana Public Service Commission (LPSC) Order (Docket U-22252 Subdocket C 04/19/98), numerous arbitration cases, LPSC sponsored collaborative workshops (10/98-02/00), and proceedings in Alabama, Florida, Mississippi, and North Carolina have and continue to influence the SQM. Per the Order in Docket 01-00193, issued by the Tennessee Regulatory Authority on October 4, 2002, this version of the SQM reflects the Florida Public Service Commission Order Nos. PSC-02-1736-PAA-TP, issued December 10, 2002, PSC-03-0529-PAA-TP, issued April 22, 2003 and PSC-03-0603-CO-TP, issued May 15, 2003.

The SQM and the reports flowing from it must change to reflect the dynamic requirements of the industry. New measurements are added as new products, systems, and processes are developed and fielded. New products and services are added as the markets for them develop and the processes stabilize. The measurements are also changed to reflect changes in systems, correct errors, and respond to both 3rd Party audit requirements and the Florida PSC.

This document is intended for use by someone with knowledge of the telecommunications industry, information technologies and a functional knowledge of the subject areas covered by the BellSouth Performance Measurements and the reports that flow from them.

Once it is approved, the most current copy of this document can be found on the web at URL: http://pmap.bellsouth.com in the Documentation/Exhibits folder.

Report Publication Dates

Each month, preliminary SQM reports will be posted to BellSouth's SQM web site (http://pmap.bellsouth.com) by 8:00 A.M. EST on the 21st day of each month or the first business day after the 21st. The validated SQM reports will be posted by 8:00 A.M. on the last day of the month. Reports not posted by this time will be considered late for SEEM payment purposes. Validated SEEM reports will be posted on the 15th of the following month. SEEM payments due will also be paid on the

[1] *Alternative Local Exchange Companies (ALEC) and Competing Local Providers (CLP) are referred to as Competitive Local Exchange Carriers (CLEC) in this document.*

15th of the following month. For instance: May data will be posted in preliminary SQM reports on June 21. Final validated SQM reports will be posted on the last day of the month. Final validated SEEM reports will be posted and payments mailed on the 15th of the following month. BellSouth shall retain the performance measurement raw data files for a period of 18 months and further retain the monthly reports produced in PMAP for a period of three years.

Report Delivery Methods

CLEC SQM and SEEM reports will be considered delivered when posted to the web site. The Tennessee Regulatory Authority has access to the web site. In addition, a copy of the SQM and Monthly State Summary reports will be filed with the TRA as soon as possible after the last day of each month.

Contents

Section 1: Operations Support Systems (OSS)

OSS-1: Average Response Interval and Percent within Interval (Pre-Ordering/Ordering) 4
OSS-2: OSS Availability (Pre-Ordering/Ordering) 7
OSS-3: OSS Availability (Maintenance & Repair) 9
OSS-4: Response Interval (Maintenance & Repair) 11
PO-1: Loop Makeup - Response Time – Manual 13
PO-2: Loop Makeup - Response Time - Electronic 15

Section 2: Ordering

O-1: Acknowledgement Message Timeliness 17
O-2: Acknowledgement Message Completeness 19
O-3: Percent Flow-Through Service Requests (Summary) 21
O-4: Percent Flow-Through Service Requests (Detail) 24
Flow-Through Error Analysis 27
O-6: CLEC LSR Information 29
O-7: Percent Rejected Service Requests 31
O-8: Reject Interval 34
O-9: Firm Order Confirmation Timeliness 38
O-10: Service Inquiry with LSR Firm Order Confirmation (FOC) Response Time Manual 42
O-11: Firm Order Confirmation and Reject Response Completeness 44
O-12: Speed of Answer in Ordering Center 46

Section 3: Provisioning

P-1: Mean Held Order Interval & Distribution Intervals 48
P-2: (Deleted) Average Jeopardy Notice Interval & Percentage of Orders Given Jeopardy Notices 51
P-2A: Jeopardy Notice Interval 52
P-2B: Percentage of Orders Given Jeopardy Notices 54
P-3: Percent Missed Initial Installation Appointments 57
P-3A: (Deleted) Percent Missed Installation Appointments Including Subsequent Appointment 60
P-4: Average Completion Interval (OCI) & Order Completion Interval Distribution 61
P-4A: (Deleted) Average Order Completion Interval (OCI) & Order Completion Interval Distribution 64
P-5: Average Completion Notice Interval 65
P-6: % Completions/Attempts without Notice or < 24 hours Notice 68
P-7: Coordinated Customer Conversions Interval 70
P-7A: Coordinated Customer Conversions – Hot Cut Timeliness% within Interval and Average Interval 72
P-7B: Coordinated Customer Conversions – Average Recovery Time 75
P-7C: Hot Cut Conversions - % Provisioning Troubles Received within 7 Days of a Completed Service Order 77
P-8: Cooperative Acceptance Testing - % of xDSL Loops Successfully Passing Cooperative Testing 79
P-9: % Provisioning Troubles within 30 Days of Service Order Completion 81
P-10: (Deleted) Total Service Order Cycle Time (TSOCT) 84
P-11: Service Order Accuracy 85
P-11A: Service Order Accuracy 87
P-12: (Deleted) LNP-Average Disconnect Timeliness Interval & Disconnect Timeliness Interval Distribution 90
P-13B: LNP-Percent Out of Service < 60 Minutes 91
P-13C: LNP-Percentage of Time BellSouth Applies the 10-Digit Trigger Prior to the LNP Order Due Date 93
P-13D: LNP-Average Disconnect Timeliness Interval Distribution (Non-Trigger) 95

Section 4: Maintenance & Repair

M&R-1: Missed Repair Appointments 97
M&R-2: Customer Trouble Report Rate 100
M&R-3: Maintenance Average Duration 103
M&R-4: Percent Repeat Troubles within 30 Days 106

M&R-5: Out of Service (OOS) > 24 Hours 109
M&R-6: Average Answer Time – Repair Centers 112
M&R-7: Mean Time To Notify CLEC of Network Outages 114

Section 5: Billing

B-1: Invoice Accuracy 116
B-2: Mean Time to Deliver Invoices 118
B-3: Usage Data Delivery Accuracy 120
B-4: Usage Data Delivery Completeness 122
B-5: Usage Data Delivery Timeliness 124
B-6: Mean Time to Deliver Usage 126
B-7: Recurring Charge Completeness 128
B-8: Non-Recurring Charge Completeness 130
B-9: Percent Daily Usage Feed Errors Corrected in "X" Business Days 132
B-10: Percent Billing Errors Corrected in "X" Business Days 134

Section 6: Operator Services and Directory Assistance

OS-1: Speed to Answer Performance/Average Speed to Answer - Toll 136
OS-2: Speed to Answer Performance/Percent Answered within "X" Seconds – Toll 138
DA-1: Speed to Answer Performance/Average Speed to Answer – Directory Assistance (DA) 140
DA-2: Speed to Answer Performance/Percent Answered within "X" Seconds – Directory Assistance (DA) 142

Section 7: Database Update Information

D-1: Average Database Update Interval 144
D-2: Percent Database Update Accuracy 146
D-3: Percent NXXs and LRNs Loaded by the LERG Effective Date 148

Section 8: E911

E-1: Timeliness 150
E-2: Accuracy 152
E-3: Mean Interval 153

Section 9: Trunk Group Performance

TGP-1: Trunk Group Performance-Aggregate 155
TGP-2: Trunk Group Performance-CLEC Specific 158

Section 10: Collocation

C-1: Collocation Average Response Time 161
C-2: Collocation Average Arrangement Time 163
C-3: Collocation Percent of Due Dates Missed 165

Section 11: Change Management

CM-1: Timeliness of Change Management Notices 167
CM-2: Change Management Notice Average Delay Days 169
CM-3: Timeliness of Documents Associated with Change 171
CM-4: Change Management Documentation Average Delay Days 173
CM-5: Notification of CLEC Interface Outages 175
CM-6: Percent of Software Errors Corrected in "X" (10, 30, 45) Business Days 177
CM-7: Percent of Change Requests Accepted or Rejected within 10 Days 179
CM-8: Percent Change Requests Rejected 180
CM-9: Number of Defects in Production Releases (Type 6 CR) 182
CM-10: Software Validations 184
CM-11: Percent of Change Requests Implemented within 60 Weeks of Prioritization 186

Appendix A: Reporting Scope
A-1: Standard Service Groupings 188
A-2: Standard Service Order Activities 188

Appendix B: Glossary of Acronyms and Terms
..... 189

Appendix C: BellSouth Audit Policy
C-1: BellSouth's Internal Audit Policy 199
C-2: BellSouth's External Audit Policy 199

Appendix D: OSS Tables
..... 200

Appendix E: Flow-Through Matrix
..... 205

Section 1: Operations Support Systems (OSS)

OSS-1: Average Response Interval and Percent within Interval (Pre-Ordering/Ordering)

Definition

The average response interval and percent within the Interval is the average times and percent of requests responded to within certain intervals for accessing legacy data associated with appointment scheduling, service and feature availability, address verification, request for Telephone numbers (TNs), and Customer Service Records (CSRs).

Exclusions

- Syntactically incorrect queries
- Scheduled OSS Maintenance
- Retail usage of LENS

Business Rules

The average response interval for retrieving pre-order/order information from a given legacy system is determined by summing the response times for all requests submitted to the legacy systems during the reporting period and dividing by the total number of legacy system requests for that month.

The response interval starts when the application (LENS or TAG for CLECs and RNS or ROS for BellSouth) submits a request to the legacy system and ends when the appropriate response is received by the client application. The percent of accesses to the legacy systems during the reporting period which take less than 2.3 seconds, the percent of accesses which take more than 6 seconds, and the percent which are less than or equal to 6.3 seconds are also captured. BellSouth will not schedule maintenance during the hours from 8:00 a.m. until 9:00 p.m., Monday through Friday.

Calculation

Response Interval = (a - b)

- a = Date and Time of Legacy Response
- b = Date and Time of Legacy Request

Average Response Interval = c / d

- c = Sum of Response Intervals
- d = Number of Legacy Requests During the Reporting Period

Percent within Interval = (e / f) X 100

- e = Count of requests within the designated Interval within the reporting period.
- f = Number of Legacy Requests during the Reporting Period for System for which a response was provided.

Report Structure

- Interface Type
- Not CLEC Specific
- Not Product/Service Specific
- Regional Level

Data Retained

Relating to CLEC Experience

- Report Month
- Legacy Contract (per reporting dimension)
- Response Interval
- Regional Scope

Relating to BellSouth Performance

- Report Month
- Legacy Contract (per reporting dimension)
- Response Interval
- Regional Scope

SQM Disaggregation - Analog/Benchmark

SQM Level of Disaggregation

- **RSAG – Address** (Regional Street Address Guide-Address) – stores street address information used to validate customer addresses. CLECs and BellSouth query this legacy system.
- **RSAG – TN** (Regional Street Address Guide-Telephone number) – contains information about facilities available and telephone numbers working at a given address. CLECs and BellSouth query this legacy system.
- **ATLAS** (Application for Telephone Number Load Administration and Selection) – acts as a warehouse for storing telephone numbers that are available for assignment by the system. It enables CLECs and BellSouth service reps to select and reserve telephone numbers. CLECs and BellSouth query this legacy system.
- **COFFI** (Central Office Feature File Interface) – stores information about product and service offerings and availability. CLECs query this legacy system.
- **DSAP** (DOE Support Application) – provides due date information. CLECs and BellSouth query this legacy system.
- **CRIS** (Customer Record Information System) – Source of CSR (Customer Service Record) information. Contains information about individual customers including listings, addresses, features, services, etc. CLECs and BellSouth can query for CSR information.
- **P/SIMS** (Product/Services Inventory Management system) – provides information on capacity, tariffs, inventory and service availability. CLECs query this legacy system.
- **OASIS** (Obtain Available Services Information Systems) – Information on feature and rate availability. BellSouth queries this legacy system.

SQM Analog/Benchmark

- Parity + 2 seconds

(See Appendix D: Tables for SQM OSS Legacy Access Times)

SEEM Measure

SEEM	Tier I	Tier II	Tier III
Yes	.....	 X	.....

SEEM Disaggregation - Analog/Benchmark

SEEM Disaggregation

- **RSAG – Address** (Regional Street Address Guide-Address) – stores street address information used to validate customer addresses. CLECs and BellSouth query this legacy system.
- **RSAG – TN** (Regional Street Address Guide-Telephone number) – contains information about facilities available and telephone numbers working at a given address. CLECs and BellSouth query this legacy system.
- **ATLAS** (Application for Telephone Number Load Administration and Selection) – acts as a warehouse for storing telephone numbers that are available for assignment by the system. It enables CLECs and BellSouth service reps to select and reserve

telephone numbers. CLECs and BellSouth query this legacy system.

- **COFFI** (Central Office Feature File Interface) – stores information about product and service offerings and availability. CLECs query this legacy system.
- **DSAP** (DOE Support Application) – provides due date information. CLECs and BellSouth query this legacy system.
- **CRIS** (Customer Record Information System) – Source of CSR (Customer Service Record) information. Contains information about individual customers including listings, addresses, features, services, etc. CLECs and BellSouth can query for CSR information.
- **P/SIMS** (Product/Services Inventory Management system) – provides information on capacity, tariffs, inventory and service availability. CLECs query this legacy system.
- **OASIS** (Obtain Available Services Information Systems) – Information on feature and rate availability. BellSouth queries this legacy system.

SEEM Analog/Benchmark

- Parity + 2 Seconds

(See Appendix D: Tables for SEEM OSS Legacy Systems)

OSS-2: OSS Availability (Pre-Ordering/Ordering)

Definition

Percent of time OSS interface is functionally available compared to scheduled availability. Availability percentages for CLEC interface and for all Legacy systems accessed by them are captured. ("Functional Availability" is the amount of time in hours during the reporting period that the legacy systems are available to users. The planned System Scheduled Availability is the time in hours per day that the legacy system is scheduled to be available.)

Scheduled availability is posted on the Interconnection website: (www.interconnection.bellsouth.com/oss/osshour.html)

Exclusions

- CLEC impacting troubles caused by factors outside of BellSouth's purview, e.g., troubles in customer equipment, troubles in networks owned by telecommunications companies other than BellSouth, etc.
- Degraded service outages which are defined as a critical function that is normally performed by the CLEC or is normally provided by an application or system available to the CLEC, but with significantly reduced response or processing time.
- Scheduled OSS Maintenance

Business Rules

This measurement captures the functional availability of applications/interfaces as a percentage of scheduled availability for the same systems. Only full and Loss of Functionality outages are included in the calculation for this measure. Full outages are defined as occurrences of either of the following:

- Application/Interface application is down or totally inoperative.
- Application is totally inoperative for customers attempting to access or use the application. This includes transport outages when they may be directly associated with a specific application.
- Loss of Functionality outages are defined as:
  - A critical function that is normally performed by the CLEC or is normally provided by an application or system is temporarily unavailable to the CLEC.

Comparison to an internal benchmark provides a vehicle for determining whether or not CLECs and retail BellSouth entities are given comparable opportunities for use of pre-ordering and ordering systems.

(Note: Scheduled maintenance will not be performed between the hours of 8:00 a.m through 9:00 p.m. Monday through Friday.)

Calculation

OSS Availability (Pre-Ordering/Ordering) = (a / b) X 100

- a = Functional Availability
- b = Scheduled Availability

Report Structure

- Interface Type
- Not CLEC Specific
- Not Product/Service Specific
- Regional Level

Data Retained

Relating to CLEC Experience

- Report Month
- Legacy Contract Type (per reporting dimension)
- Regional Scope
- Hours of Downtime

Relating to BellSouth Performance

- Report Month
- Legacy Contract Type (per reporting dimension)
- Regional Scope
- Hours of Downtime

SQM Disaggregation - Analog/Benchmark

SQM Level of Disaggregation	SQM Analog/Benchmark
• Regional Level, Per OSS Interface	>= 99.5%

(See Appendix D: Tables for SQM OSS Availability)

SEEM Measure

SEEM	Tier I	Tier II
Yes		X

SEEM Disaggregation - Analog/Benchmark

SEEM Disaggregation	SEEM Analog/Benchmark
• Regional Level, Per OSS Interface	>= 99.5%

(See Appendix D: Tables for SEEM OSS Availability)

OSS-3: OSS Availability (Maintenance & Repair)

Definition

Percent of time applications are functionally available as compared to scheduled availability. Calculations are based upon availability of applications and interfacing applications utilized by CLECs for maintenance and repair. "Functional Availability" is defined as the number of hours in the reporting period that the applications/interfaces are available to users. "Scheduled Availability" is defined as the number of hours in the reporting period that the applications/interfaces are scheduled to be available.

Scheduled availability is posted on the Interconnection website: (www.interconnection.bellsouth.com/oss/osshour.html)

Exclusions

- CLEC-impacting trouble caused by factors outside of BellSouth's purview, e.g., troubles in customer equipment, troubles in networks owned by telecommunications companies other than BellSouth, etc.
- Degraded service outages which are defined as a critical function that is normally performed by the CLEC or is normally provided by an application or system available to the CLEC, but with significantly reduced response or processing time.

Business Rules

This measurement captures the functional availability of applications/interfaces as a percentage of scheduled availability for the same systems. Only full outages are included in the calculations for this measure. Full outages are defined as occurrences of either of the following:

- Application/interfacing application is down or totally inoperative.
- Application is totally inoperative for customers attempting to access or use the application. This includes transport outages when they may be directly associated with a specific application.

Loss of Functionality outages are defined as:

- A critical function that is normally performed by the CLEC or is normally provided by an application or system is temporarily unavailable to the CLEC.

Comparison to an internal benchmark provides a vehicle for determining whether or not CLECs and retail BellSouth entities are given comparable opportunities for use of maintenance and repair systems.

Calculation

OSS Availability (a / b) X 100

- a = Functional Availability
- b = Scheduled Availability

Report Structure

- Interface Type
- Not CLEC Specific
- Not Product/Service Specific
- Regional Level

Data Retained

Relating to CLEC Experience

- Availability of CLEC TAFI
- Availability of LMOS HOST, MARCH, SOCS, CRIS, PREDICTOR, LNP and OSPCM

- ECTA

Relating to BellSouth Performance

- Availability of BellSouth TAFI
- Availability of LMOS HOST, MARCH, SOCS, CRIS, PREDICTOR, LNP and OSPCM

SQM Disaggregation - Analog/Benchmark

SQM Level of Disaggregation	SQM Analog/Benchmark
• Regional Level, Per OSS Interface	>= 99.5%

(See Appendix D: Tables for OSS Availability (M&R)

SEEM Measure

SEEM	Tier I	Tier II
Yes		X

SEEM Disaggregation - Analog/Benchmark

SEEM Disaggregation	SEEM Analog/Benchmark
• Regional Level, Per OSS Interface	>= 99.5%

(See Appendix D: Tables for SEEM OSS Availability (M&R)

OSS-4: Response Interval (Maintenance & Repair)

Definition

The response intervals are determined by subtracting the time a request is received on the BellSouth side of the interface from the time the response is received from the legacy system. Percentages of requests falling into each interval category are reported, along with the actual number of requests falling into those categories.

Exclusions

None

Business Rules

This measure is designed to monitor the time required for the CLEC and BellSouth interface system to obtain from BellSouth's legacy systems the information required to handle maintenance and repair functions. The clock starts on the date and time when the request is received on the BellSouth side of the interface and the clock stops when the response has been transmitted through that same point to the requester.

Note: The OSS Response Interval BellSouth Total Report is a combination of BellSouth Residence and Business Total.

Calculation

OSS Response Interval = (a - b)

- a = Query Response Date and Time
- b = Query Request Date and Time

Percent Response Interval (per category) = (c / d) X 100

- c = Number of Response Intervals in category "X"
- d = Number of Queries Submitted in the Reporting Period

where, "X" is <= 4, > 4 <= 10, <= 10, > 10, or > 30 seconds.

Average Interval = (e / f)

- e = Sum of Response Intervals
- f = Number of Queries Submitted in the Reporting Period

Report Structure

- Not CLEC Specific
- Not Product/Service Specific
- Regional Level

Data Retained

Relating to CLEC Experience

- CLEC Transaction Intervals

Relating to BellSouth Performance

- BellSouth Business and Residential Transactions Intervals

SQM Disaggregation - Analog/Benchmark

SQM Level of Disaggregation	SQM Analog/Benchmark
• Regional Level, Per OSS Interface	Parity with Retail

(See Appendix D: Tables for Legacy System Access Times for M&R)

Note: BellSouth's Appendix D lists the query functions and the appropriate legacy systems that the queries travel through to return a response.

SEEM Measure

SEEM	Tier I	Tier II
Yes		X

SEEM Disaggregation - Analog/Benchmark

SEEM Disaggregation	SEEM Analog/Benchmark
• Region Level, Per OSS Interface	Parity with Retail

PO-1: Loop Makeup - Response Time – Manual

Definition

This report measures the average interval and percent within the interval from the submission of a Manual Loop Makeup Service Inquiry (LMUSI) to the distribution of Loop Makeup information back to the CLEC.

Exclusions

- Inquiries, which are submitted electronically
- Designated Holidays are excluded from the interval calculation
- Weekends are excluded from the interval calculation
- Canceled Inquiries

Business Rules

The CLEC Manual Loop Makeup Service Inquiry (LMUSI) process includes inquiries submitted via E-mail or FAX to BellSouth's Complex Resale Support Group (CRSG)

This measurement combines three intervals:

1. From receipt of a valid Service Inquiry for Loop Makeup to hand off to the Service Advocacy Center (SAC) for "Look-up."
2. From SAC start date to SAC complete date
3. From SAC complete date to date the Complex Resale Support Group (CRSG) distributes loop makeup information back to the CLEC.

The "Receive Date" is defined as the date the Manual LMUSI is received by the CRSG. It is counted as day Zero. LMU "Return Date" is defined as the date the LMU information is sent back to the CLEC from BellSouth. The interval calculation is reset to Zero when a CLEC initiated change occurs on the Manual LMU request.

Note: The Loop Makeup Service Inquiry Form does not require the CLEC to furnish the type of Loop. The CLEC determines whether the loop makeup will support the type of service they wish to order or not and qualifies the loop. If the loop makeup will support the service, a firm order LSR is submitted by the CLEC.

(A valid Service Inquiry is an inquiry that has all required fields populated correctly and has not been returned for clarification.)

Calculation

Response Interval = (a - b)

- a = Date the LMUSI returned to CLEC
- b = Date the LMUSI is received

Average Interval = (c / d)

- c = Sum of all Response Intervals
- d = Total Number of LMUSIs received within the reporting period

Percent within interval = (e / f) X 100

- e = Total LMUSIs received within the interval
- f = Total Number of LMUSIs processed within the reporting period

Report Structure

- CLEC Aggregate
- CLEC Specific
- Geographic Scope
  - State
  - Region
- Interval for manual LMUs:
  0 – <=1 day
  >1 – <= 2 days
  >2 – <= 3 days
  0 - <= 3 days
  >3 – <= 6 days
  >6 – <= 10 days
  > 10 days
- Average Interval in days

Data Retained

Relating to CLEC Experience

- Report Month
- Total Number of Inquiries
- SI Intervals
- State and Region

Relating to BellSouth Performance

SQM Disaggregation - Analog/Benchmark

SQM Level of Disaggregation	SQM Analog/Benchmark
• Loops	Benchmark: 95% <= 3 Business Days

SEEM Measure

SEEM	Tier I	Tier II
Yes	X	X

SEEM Disaggregation - Analog/Benchmark

SEEM Disaggregation	SEEM Analog/Benchmark
• Loops	Benchmark: 95% <= 3 Business Days

PO-2: Loop Makeup - Response Time - Electronic

Definition

This report measures the average interval and the percent within the interval from the electronic submission of a Loop Makeup Service Inquiry (LMUSI) to the distribution of Loop Makeup information back to the CLEC.

Exclusions

- Manually submitted inquiries
- Canceled Requests

Business Rules

The response interval starts when the CLEC's Mechanized Loop Makeup Service Inquiry (LMUSI) is submitted electronically through the Operational Support Systems interface, TAG. It ends when BellSouth's Loop Facility Assignment and Control System (LFACS) responds electronically to the CLEC with the requested Loop Makeup data via the TAG Interface. LSRs submitted via LENs will be reflected in the results for the TAG interface.

> **Note**: The Loop Makeup Service Inquiry Form does not require the CLEC to furnish the type of Loop. The CLEC determines whether the loop makeup will support the type of service they wish to order or not and qualifies the loop. If the loop makeup will support the service, a firm order LSR is submitted by the CLEC. EDI is not a pre-ordering system, and, therefore, is not applicable in this measure.

Calculation

Response Interval = (a - b)

- a = Date and Time the LMUSI returned to CLEC
- b = Date and Time the LMUSI is received

Average Interval = (c / d)

- c = Sum of all response intervals
- d = Total Number of LMUSIs received within the reporting period

Percent within interval = (e / f) X 100

- e = Total LMUSIs received within the interval
- f = Total Number of LMUSIs processed within the reporting period

Report Structure

- CLEC Aggregate
- CLEC Specific
- Geographic Scope
  - State
  - Region
- Interval for electronic LMUs:
  0 – <= 1 minute
  >1 – <= 5 minutes
  0 - <= 5 minutes
  > 5 – <= 8 minutes
  > 8 – <= 15 minutes

> 15 minutes
- Average Interval in minutes

Data Retained

Relating to CLEC Experience

- Report Month
- Total Number of Inquires
- SI Interval
- State and Region

Relating to BellSouth Performance

- Not Applicable

SQM Disaggregation - Analog/Benchmark

SQM Level of Disaggregation	SQM Analog/Benchmark
• Loop	Benchmark: 95% <= 1 Minute

SEEM Measure

SEEM	Tier I	Tier II
Yes	X	X

SEEM Disaggregation - Analog/Benchmark

SEEM Disaggregation	SEEM Analog/Benchmark
• Loop	95% <= 1 Minute

Section 2: Ordering

O-1: Acknowledgement Message Timeliness

Definition

This measurement provides the response interval and percent within the interval from the time an LSR or transmission (may contain multiple LSRs from one or more CLECs in multiple states) is electronically submitted via EDI or TAG until an acknowledgement notice is sent by the system.

Exclusions

- Scheduled OSS Maintenance
- Manually Submitted LSRs

Business Rules

The process includes EDI and TAG system functional acknowledgements for all Local Service Requests (LSRs) which are electronically submitted by the CLEC. The start time is the receipt time of the LSR at BellSouth's side of the interface (gateway). The end time is when the acknowledgement is transmitted by BellSouth at BellSouth's side of the interface (gateway). For those CLECs using EDI, if more than one CLEC uses the same ordering center, an Acknowledgement Message will be returned to the "Aggregator", however, BellSouth will not be able to determine which specific CLEC this message represented.

Calculation

Response Interval = (a - b)

- a = Date and Time Acknowledgement Notices returned to CLEC
- b = Date and Time Messages/LSRs electronically submitted by the CLEC via EDI or TAG respectively

Average Response Interval = (c / d)

- c = Sum of all Response Intervals for returned acknowledgements
- d = Total number of electronically submitted Messages/LSRs received, via EDI or TAG respectively, for which Acknowledgement Notices were returned in the Reporting Period.

Percent within Interval = (e / f) X 100

- e = Total number of electronically submitted messages/LSRs received, from CLEC via EDI or TAG respectively, in the Reporting Period.
- f = Total number of electronically submitted messages/LSRs acknowledged in the Reporting Period.

Reporting Structure

- CLEC Aggregate
- CLEC Specific
- Geographic Scope
  - Region
- Electronically Submitted LSRs
  0 – <=10 minutes
  > 10 – <= 20 minutes
  > 20 – <= 30 minutes
  0 – <= 30 minutes
  > 30 – <= 45 minutes
  > 45 – <= 60 minutes

> 60 – <= 120 minutes
> 120 minutes
- Average interval for electronically submitted LSRs in minutes

Data Retained

Relating to CLEC Experience

- Report Month
- Record of Functional Acknowledgements

Relating to BellSouth Performance

- Not Applicable

SQM Disaggregation - Analog/Benchmark

SQM Level of Disaggregation	SQM Analog/Benchmark
EDI	EDI – 95% <= 30 Minutes
TAG	TAG – 95% <= 30 Minutes

SEEM Measure

SEEM	Tier I	Tier II
Yes	X	X

SEEM Disaggregation - Analog/Benchmark

SEEM Disaggregation	SEEM Analog/Benchmark
EDI	EDI – 95% <= 30 Minutes
TAG	TAG – 95% <= 30 Minutes

O-2: Acknowledgement Message Completeness

Definition

This measurement provides the percent of Messages/LSRs received via EDI or TAG, which are acknowledged electronically.

Exclusions

Manually submitted LSRs

Business Rules

EDI and TAG send Functional Acknowledgements for all LSRs, which are electronically submitted by a CLEC. For those CLECs using EDI, if more than one CLEC uses the same ordering center, an Acknowledgement Message will be returned to the "Aggregator", however, BellSouth will not be able to determine which specific CLEC this message represented. The Acknowledgement Message is returned prior to the determination of whether the LSR will be partially mechanized or fully mechanized.

Calculation

Acknowledgement Completeness = (a / b) X 100

- a = Total number of Functional Acknowledgements returned in the reporting period for Messages/LSRs electronically submitted by EDI or TAG respectively
- b = Total number of electronically submitted Messages/LSRs received in the reporting period by EDI or TAG respectively

Report Structure

- CLEC Aggregate
- CLEC Specific
- Geographic Scope
  - Region

Note: Acknowledgement message is generated before the system recognizes whether this message (LSR) will be partially or fully mechanized.

Data Retained

Relating to CLEC Experience

- Report Month
- Record of Functional Acknowledgements

Relating to BellSouth Performance

- Not Applicable

SQM Disaggregation - Analog/Benchmark

SQM Level of Disaggregation	SQM Analog/Benchmark
EDI	Benchmark: 99.9%
TAG	Benchmark: 99.5%

SEEM Measure

SEEM	Tier I	Tier II
Yes	X	X

SEEM Disaggregation - Analog/Benchmark

SEEM Disaggregation	SEEM Analog/Benchmark
• EDI	Benchmark: 99.9%
• TAG	Benchmark: 99.5%

O-3: Percent Flow-Through Service Requests (Summary)

Definition

The percentage of Local Service Requests (LSR) and LNP Local Service Requests (LNP LSRs) submitted electronically via the CLEC mechanized ordering process that flow through and reach a status for a FOC to be issued, without manual intervention.

Exclusions

- Fatal Rejects
- Auto Clarification
- Manual Fallout for Percent Flow-Through only
- CLEC System Fallout
- Scheduled OSS Maintenance

Business Rules

The CLEC mechanized ordering process includes all LSRs, including supplements (subsequent versions) which are submitted through one of the three gateway interfaces (TAG, EDI and LENS), that flow through and reach a status for a FOC to be issued, without manual intervention. These LSRs can be divided into two classes of service: Business and Residence, and two types of service: Resale, and Unbundled Network Elements (UNE). The CLEC mechanized ordering process does not include LSRs which are submitted manually (for example, fax and courier) or are not designed to flow through (for example, Manual Fallout.)

Definitions:

Fatal Rejects: Errors that prevent an LSR, submitted electronically by the CLEC, from being processed further. When an LSR is submitted by a CLEC, LEO/LNP Gateway will perform edit checks to ensure the data received is correctly formatted and complete. For example, if the PON field contains an invalid character, LEO/LNP Gateway will reject the LSR and the CLEC will receive a Fatal Reject.

Auto-Clarification: Clarifications that occur due to invalid data within the LSR. LESOG/LAUTO will perform data validity checks to ensure the data within the LSR is correct and valid. For example, if the address on the LSR is not valid according to RSAG, or if the LNP is not available for the NPA NXX requested, the CLEC will receive an Auto-Clarification.

Manual Fallout: Planned Fallout that occur by design. Certain LSRs are designed to fallout of the Mechanized Order Process due to their complexity. These LSRs are manually processed by the LCSC. When a CLEC submits an LSR, LESOG/LAUTO will determine if the LSR should be forwarded to LCSC for manual handling. Following are the categories for Manual Fallout:

1. Complex*
2 Special pricing plans
3. Some Partial migrations (All LNP Partial Migrations)
4. New telephone number not yet posted to BOCRIS
5. Pending order review required
6. CSR inaccuracies such as invalid or missing CSR data in CRIS
7. Expedites (requested by the CLEC)
8. Denials-restore and conversion, or disconnect and conversion orders
9. Class of service invalid in certain states with some types of service
10. Low volume such as activity type “T” (move)
11. More than 25 business lines, or more than 15 loops
12. Transfer of calls option for the CLEC end users
13. Directory Listings (Identions and Captions)
14. LNP Only – Supplement LSRs except supps of O-2 (Due Date Changes) on Req Type CB

*See LSR Flow-Through Matrix in Appendix E for a list of services, including complex services, and whether LSRs issued for the services are eligible to flow through. The matrix is updated automatically when new services are added or the systems are improved to allow a service to flow through. The current version of the Flow-Through Matrix is on the PMAP website (http://pmap.bellsouth.com) in the Documentation/Exhibits folder. Any change in the flow-through order category from flow-through to non-flow-through shall require prior

Commission approval.

Total System Fallout: Errors that require manual review by the LCSC to determine if the error is caused by the CLEC, or is due to BellSouth system functionality. If it is determined the error is caused by the CLEC, the LSR will be sent back to the CLEC for clarification. If it is determined the error is BellSouth caused, the LCSC representative will correct the error, and the LSR will continue to be processed.

Z Status: LSRs that receive a supplemental LSR submission prior to final disposition of the original LSR.

Calculation

Percent Flow Through = a / [b - (c + d + e + f)] X 100

- a = the total number of LSRs that flow through LESOG/LAUTO and reach a status for a FOC to be issued
- b = the number of LSRs passed from LEO/LNP Gateway to LESOG/LAUTO
- c = the number of LSRs that fallout for manual processing
- d = the number of LSRs that are returned to the CLEC for auto clarification
- e = the number of LSRs that are returned to the CLEC from the LCSC due to CLEC clarification
- f = the number of LSRs that receive a Z status.

Percent Achieved Flow Through = a / [b - (c + d + e)] X 100

- a = the number of LSRs that flow through LESOG/LAUTO and reach a status for a FOC to be issued.
- b = the number of LSRs passed from LEO/LNP Gateway to LESOG/LAUTO
- c = the number of LSRs that are returned to the CLEC for auto clarification
- d = the number of LSRs that are returned to the CLEC from the LCSC due to CLEC clarification
- e = the number of LSRs that receive Z status

Report Structure

- CLEC Aggregate
  - Region

Data Retained

Relating to CLEC Experience

- Report Month
- Total Number of LSRs Received, by Interface, by CLEC
  - TAG
  - EDI
  - LENS
- Total Number of Errors by Type, by CLEC
  - Fatal Rejects
  - Auto Clarification
  - CLEC Caused System Fallout
- Total Number of Errors by Error Code
- Total Fallout for Manual Processing

Relating to BellSouth Performance

- Report Month
- Total Number of Errors by Type
  - BellSouth System Error

SQM Disaggregation - Analog/Benchmark

SQM Level of Disaggregation	SQM Analog/Benchmark[a]
• Residence	Benchmark: 95%
• Business	Benchmark: 90%
• UNE - Loops	Benchmark: 85%
• UNE-P	Benchmark: 90%
• LNP	Benchmark: 85%

SEEM Measure

SEEM	Tier I	Tier II
Yes		X

SEEM Disaggregation - Analog/Benchmark

SEEM Disaggregation	SEEM Analog/Benchmark[a]
• Residence	Benchmark: 95%
• Business	Benchmark: 90%
• UNE - Loops	Benchmark: 85%
• UNE-P	Benchmark: 90%
• LNP	Benchmark: 85%

[a] *Benchmarks do not apply to the "Percent Achieved Flow-Through."*

O-4: Percent Flow-Through Service Requests (Detail)

Definition

A detailed list, by CLEC, of the percentage of Local Service Requests (LSR) and LNP Local Service Requests (LNP LSRs) submitted electronically via the CLEC mechanized ordering process that flow through and reach a status for a FOC to be issued, without manual or human intervention.

Exclusions

- Fatal Rejects
- Auto Clarification
- Manual Fallout for Percent Flow-Through only
- CLEC System Fallout
- Scheduled OSS Maintenance

Business Rules

The CLEC mechanized ordering process includes all LSRs, including supplements (subsequent versions) which are submitted through one of the three gateway interfaces (TAG, EDI, and LENS), that flow through and reach a status for a FOC to be issued, without manual intervention. These LSRs can be divided into two classes of service: Business and Residence, and two types of service: Resale, and Unbundled Network Elements (UNE). The CLEC mechanized ordering process does not include LSRs, which are submitted manually (for example, fax and courier) or are not designed to flow through (for example, Manual Fallout.)

Definitions:

Fatal Rejects: Errors that prevent an LSR, submitted electronically by the CLEC, from being processed further. When an LSR is submitted by a CLEC, LEO/LNP Gateway will perform edit checks to ensure the data received is correctly formatted and complete. For example, if the PON field contains an invalid character, LEO/LNP Gateway will reject the LSR and the CLEC will receive a Fatal Reject.

Auto-Clarification: Clarifications that occur due to invalid data within the LSR. LESOG/LAUTO will perform data validity checks to ensure the data within the LSR is correct and valid. For example, if the address on the LSR is not valid according to RSAG, or if the LNP is not available for the NPA NXX requested, the CLEC will receive an Auto-Clarification.

Manual Fallout: Planned Fallout that occur by design. Certain LSRs are designed to fallout of the Mechanized Order Process due to their complexity. These LSRs are manually processed by the LCSC. When a CLEC submits an LSR, LESOG/LAUTO will determine if the LSR should be forwarded to LCSC for manual handling. Following are the categories for Manual Fallout:

1. Complex*
2 Special pricing plans
3. Some Partial migrations (All LNP Partial Migrations)
4. New telephone number not yet posted to BOCRIS
5. Pending order review required
6. CSR inaccuracies such as invalid or missing CSR data in CRIS
7. Expedites (requested by the CLEC)
8. Denials-restore and conversion, or disconnect and conversion orders
9. Class of service invalid in certain states with some types of service
10. Low volume such as activity type “T” (move)
11. More than 25 business lines, or more than 15 loops
12. Transfer of calls option for the CLEC end users
13. Directory Listings (Identions and Captions)
14. LNP Only – Supplement LSRs except supps of O-2 (Due Date Changes) on Req Type CB

*See LSR Flow-Through Matrix in Appendix E for a list of services, including complex services, and whether LSRs issued for the services are eligible to flow through. The matrix is updated automatically when new services are added or the systems are improved to allow a service to flow through. The current version of the Flow-Through Matrix is on the PMAP website (http://pmap.bellsouth.com) in the

Documentation/Exhibits folder. Any change in the flow-through order category from flow-through to non-flow-through shall require prior Commission approval.

Total System Fallout: Errors that require manual review by the LCSC to determine if the error is caused by the CLEC, or is due to BellSouth system functionality. If it is determined the error is caused by the CLEC, the LSR will be sent back to the CLEC for clarification. If it is determined the error is BellSouth caused, the LCSC representative will correct the error, and the LSR will continue to be processed.

Z Status: LSRs that receive a supplemental LSR submission prior to final disposition of the original LSR.

Calculation

Percent Flow Through = a / [b - (c + d + e + f)] X 100

- a = the total number of LSRs that flow through LESOG/LAUTO and reach a status for a FOC to be issued
- b = the number of LSRs passed from LEO/LNP Gateway to LESOG/LAUTO
- c = the number of LSRs that fallout for manual processing
- d = the number of LSRs that are returned to the CLEC for auto clarification
- e = the number of LSRs that are returned to the CLEC from the LCSC due to CLEC clarification
- f = the number of LSRs that receive a Z status.

Percent Achieved Flow Through = a / [b - (c + d + e)] X 100

- a = the number of LSRs that flow through LESOG/LAUTO and reach a status for a FOC to be issued
- b = the number of LSRs passed from LEO/LNP Gateway to LESOG/LAUTO
- c = the number of LSRs that are returned to the CLEC for auto clarification
- d = the number of LSRs that are returned to the CLEC from the LCSC due to CLEC clarification
- e = the number of LSRs that receive Z status

Report Structure

Provides the flow through percentage for each CLEC (by alias designation) submitting LSRs through the CLEC mechanized ordering process. The report provides the following:

- CLEC (by alias designation)
- Number of fatal rejects
- Mechanized interface used
- Total mechanized LSRs
- Total manual fallout
- Number of auto clarifications returned to CLEC
- Number of validated LSRs
- Number of BellSouth caused fallout
- Number of CLEC caused fallout
- Number of Service Orders Issued
- Base calculation
- CLEC error excluded calculation
- Region

Data Retained

Relating to CLEC Experience

- Report Month
- Total Number of LSRs Received, by Interface, by CLEC
  - TAG
  - EDI
  - LENS
- Total Number of Errors by Type, by CLEC
  - Fatal Rejects
  - Auto Clarification

- CLEC Errors
- Total Number of Errors by Error Code
- Total Fallout for Manual Processing

Relating to BellSouth Performance

- Report Month
- Total Number of Errors by Type
  - BellSouth System Error

SQM Disaggregation - Analog/Benchmark

SQM Level of Disaggregation	SQM Analog/Benchmark[a]
Residence	Benchmark: 95%
Business	Benchmark: 90%
UNE - Loops	Benchmark: 85%
UNE-P	Benchmark: 90%
LNP	Benchmark: 85%

SEEM Measure

SEEM	Tier I	Tier II
Yes	X	

SEEM Disaggregation - Analog/Benchmark

SEEM Disaggregation	SEEM Analog/Benchmark
Residence	Benchmark: 95%
Business	Benchmark: 90%
UNE- Loops	Benchmark: 85%
UNE-P	Benchmark: 90%
LNP	Benchmark: 85%

[a] *Benchmarks do not apply to the "Percent Achieved Flow-Through."*

Flow-Through Error Analysis

Definition

An analysis of each error type (by error code) that was experienced by the LSRs that did not flow through or reached a status for a FOC to be issued.

Exclusions

Each Error Analysis is error code specific, therefore exclusions are not applicable.

Business Rules

The CLEC mechanized ordering process includes all LSRs, including supplements (subsequent versions) which are submitted through one of the three gateway interfaces (TAG, EDI, and LENS), that flow through and reach a status for a FOC to be issued. The CLEC mechanized ordering process does not include LSRs which are submitted manually (for example, fax and courier).

Calculation

Total for each error type

Report Structure

Provides an analysis of each error type (by error code). The report is in descending order by count of each error code and provides the following:

- Error Type (by error code)
- Count of each error type
- Percent of each error type
- Cumulative percent
- Error Description
- CLEC Caused Count of each error code
- Percent of aggregate by CLEC caused count
- Percent of CLEC caused count
- BellSouth Caused Count of each error code
- Percent of aggregate by BellSouth caused count
- Percent of BellSouth by BellSouth caused count.

Data Retained

Relating to CLEC Experience

- Report Month
- Total Number of LSRs Received
- Total Number of Errors by Type (by Error Code)
  - CLEC caused error

Relating to BellSouth Performance

- Report Month
- Total Number of Errors by Type (by Error Code)
  - BellSouth System Error

SQM Disaggregation - Analog/Benchmark

SQM Level of Disaggregation	SQM Analog/Benchmark
• Not Applicable	Not Applicable

SEEM Measure

SEEM	Tier I	Tier II
No		

SEEM Disaggregation - Analog/Benchmark

SEEM Disaggregation	SEEM Analog/Benchmark
• Not Applicable	Not Applicable

O-6: CLEC LSR Information

Definition

A list with the flow through activity of LSRs by CC, PON and Ver, issued by each CLEC during the report period.

Exclusions

- Fatal Rejects
- LSRs Submitted Manually

Business Rules

The CLEC mechanized ordering process includes all LSRs, including supplements (subsequent versions) which are submitted through one of the three gateway interfaces (TAG, EDI, and LENS), that flow through and reach a status for a FOC to be issued. The CLEC mechanized ordering process does not include LSRs which are submitted manually (for example, fax and courier).

Calculation

Not Applicable

Report Structure

Provides a list with the flow through activity of LSRs by CC, PON and Ver, issued by each CLEC during the report period with an explanation of the columns and content. This report is available on a CLEC specific basis. The report provides the following for each LSR.

- CC
- PON
- Ver
- Timestamp
- Type
- Err #
- Note or Error Description

Data Retained

Relating to CLEC Experience

- Report Month
- Record of LSRs Received by CC, PON and Ver
- Record of Timestamp, Type, Err # and Note or Error Description for Each LSR by CC, PON and Ver

Relating to BellSouth Performance

- Not Applicable

SQM Disaggregation - Analog/Benchmark

SQM Level of Disaggregation	SQM Analog/Benchmark
Not Applicable	Not Applicable

SEEM Measure

SEEM	Tier I	Tier II
No		

SEEM Disaggregation - Analog/Benchmark

SEEM Disaggregation	SEEM Analog/Benchmark
• Not Applicable	Not Applicable

O-7: Percent Rejected Service Requests

Definition

Percent Rejected Service Request is the percent of total Service Requests [(Local Service Requests (LSRs) or Access Service Requests (ASRs)] received which are rejected due to error or omission. Service Requests are considered valid when they are submitted by the CLEC and pass edit checks to insure the data received is correctly formatted and complete.

Exclusions

- Service Requests canceled by the CLEC prior to being rejected/clarified.
- Fatal Rejects
- Order Activities of BellSouth or the CLEC associated with internal or administrative use of local services (Record Orders, Test Orders, etc.) where identifiable
- LSRs identified as "Projects"

Business Rules

Fully Mechanized: An LSR/Service Request is considered "rejected" when it is submitted electronically but does not pass edit checks in the ordering systems (EDI, LENS, TAG, LESOG, LNP Gateway, LAUTO) and is returned to the CLEC without manual intervention. There are two types of "Rejects" in the Mechanized category:

A **Fatal Reject** occurs when a CLEC attempts to electronically submit an LSR but required fields are either not populated or incorrectly populated and the request is returned to the CLEC before it is considered a valid LSR.

Fatal rejects are reported in a separate column, and for informational purposes ONLY. They are not considered in the calculation of the percent of total LSRs rejected or the total number of rejected LSRs.

An **Auto Clarification** occurs when a valid LSR is electronically submitted but rejected from LESOG or LAUTO because it does not pass further edit checks for order accuracy.

Partially Mechanized: A valid LSR, which is electronically submitted (via EDI, LENS, TAG) but cannot be processed electronically and "falls out" for manual handling. It is then put into "clarification" and sent back (rejected) to the CLEC.

Non-Mechanized: LSRs which are faxed or mailed to the LCSC for processing and "clarified" (rejected) back to the CLEC by the BellSouth service representative.

Interconnection Trunks: Interconnection Trunks are ordered on Access Service Requests (ASRs). ASRs are submitted to and processed by the Local Interconnection Service Center (LISC). Trunk data is reported as a separate category.

Calculation

Percent Rejected Service Requests = (a / b) X 100

- a = Total Number of Service Requests Rejected in the reporting period
- b = Total Number of Service Requests Received in the reporting period

Report Structure

- Fully Mechanized, Partially Mechanized, Non-Mechanized
- Trunks
- CLEC Specific
- CLEC Aggregate
- Geographic Scope
  - State

- Region
- Product Specific percent Rejected
- Total percent Rejected

Data Retained

Relating to CLEC Experience

- Report Month
- Total Number of LSRs
- Total Number of Rejects
- State and Region
- Total Number of ASRs (Trunks)

Relating to BellSouth Performance

- Not Applicable

SQM Disaggregation - Analog/Benchmark

SQM Level of Disaggregation	SQM Analog/Benchmark
Mechanized, Partially Mechanized and Non-Mechanized	
Resale – Residence	Diagnostic
Resale - Business	
Resale – Design (Special)	
Resale PBX	
Resale Centrex	
Resale ISDN	
LNP (Standalone)	
INP (Standalone)	
2W Analog Loop Design	
2W Analog Loop Non-Design	
2W Analog Loop with INP Design	
2W Analog Loop with INP Non-Design	
2W Analog Loop with LNP Design	
2W Analog Loop with LNP Non-Design	
UNE Digital Loop < DS1	
UNE Digital Loop >= DS1	
UNE Loop + Port Combinations	
UNE Combination Other	
UNE ISDN Loop	
UNE Other Design	
UNE Other Non-Design	
UNE Line Splitting	
EELs	
Switch Ports	
UNE xDSL (ADSL, HDSL, UCL)	
Line Sharing	
Local Interoffice Transport	
Local Interconnection Trunks	

SEEM Measure

SEEM	Tier I	Tier II
No		

SEEM Disaggregation - Analog/Benchmark

SEEM Disaggregation	SEEM Analog/Benchmark
• Not Applicable	Not Applicable

O-8: Reject Interval

Definition

Reject Interval is the average reject time from receipt of Service Requests [(Local Service Requests (LSRs) or Access Service Requests (ASRs)] to the distribution of a Reject. Service Requests are considered valid when they are submitted by the CLEC and pass edit checks to insure the data received is correctly formatted and complete. When there are multiple rejects on a single version of an LSR, the first reject issued is used for the calculation of the interval duration.

Exclusions

- Service Requests canceled by CLEC prior to being rejected/clarified.
- Fatal Rejects
- Designated Holidays are excluded from the interval calculation for partially mechanized and non-mechanized LSRs/ASRs only.
- LSRs which are identified and classified as "Projects"

  Non-business hours for Partially Mechanized and Non-Mechanized LSRs are excluded from the interval calculation. The excluded time is the time outside of normal operations which can be found at the following website: http://www.interconnection.bellsouth.com/centers/html/lcsc.html

  Local Interconnection Service Center (LISC) - Monday through Friday 4:30 PM until 8:00 AM
  From 4:30 PM Friday until 8:00 AM Monday

  The hours excluded will be altered to reflect changes in the Center operating hours. The LCSC will accept faxed LSRs only during posted hours of operation.

  The interval will be the amount of time accrued from receipt of the LSR until normal closing of the center if an LSR is worked using overtime hours.

  In the case of a Partially Mechanized LSR received and worked after normal business hours, the interval will be set at one (1) minute.

Business Rules

The Reject interval is determined for each rejected LSR processed during the reporting period. The Reject interval is the elapsed time from when BellSouth receives LSR (date and time stamps in EDI or TAG) until that LSR is rejected back to the CLEC. Elapsed time for each LSR (date and time stamps in EDI or TAG) is accumulated for each reporting dimension. The accumulated time for each reporting dimension is then divided by the associated total number of rejected LSRs to produce the reject interval distribution.

Fully Mechanized: The elapsed time from receipt of a valid electronically submitted LSR (date and time stamp in EDI translator or TAG) until the LSR is rejected (date and time stamp or reject in EDI translator, or TAG). Auto Clarifications are considered in the Fully Mechanized category.

Partially Mechanized: The elapsed time from receipt of a valid electronically submitted LSR (date and time stamp in EDI translator or TAG) until it falls out for manual handling. The stop time on partially mechanized LSRs is when the LCSC Service Representative clarifies the LSR back to the CLEC via EDI translator, or TAG.

Non-Mechanized: The elapsed time from receipt of a valid LSR (date and time stamp of FAX or date and time mailed LSR is received in the LCSC) until notice of the reject (clarification) is returned to the CLEC via LON.

Interconnection Trunks: Interconnection Trunks are ordered on Access Service Requests (ASRs). ASRs are submitted to and processed by the Local Interconnection Service Center (LISC). Trunk data is reported as a separate category.

Calculation

Reject Interval = (a - b)

- a = Date and Time of Service Request Rejection
- b = Date and Time of Service Request Receipt

Average Reject Interval = (c / d)

- c = Sum of all Reject Intervals
- d = Number of Service Requests Rejected in Reporting Period

Reject Interval Distribution = (e / f) X 100

- e = Service Requests Rejected in reported interval
- f = Total Number of Service Requests Rejected in Reporting Period

Report Structure

- Fully Mechanized, Partially Mechanized, Non-Mechanized
- CLEC Specific
- CLEC Aggregate
- Geographic Scope
  - State
  - Region
- Fully Mechanized:
  0 - <= 4 minutes
  > 4 - <= 8 minutes
  >8 - <= 12 minutes
  > 12 - <= 60 minutes
  0 - <= 1 hour
  > 1 - <= 4 hours
  > 4 - <= 8 hours
  > 8 - <= 12 hours
  > 12 - <= 16 hours
  > 16 - <= 20 hours
  > 20 - <= 24 hours
  > 24 hours
- Partially Mechanized:
  0 - <= 1 hour
  > 1 - <= 4 hours
  > 4 - <= 8 hours
  > 8 - <= 10 hours
  0 - <= 10 hours
  > 10 - <= 18 hours
  0 - <= 18 hours
  > 18 - <= 24 hours
  > 24 hours
- Non-mechanized:
  0 - <= 1 hour
  > 1 - <= 4 hours
  > 4 - <= 8 hours
  > 8 - <= 12 hours
  > 12 - <= 16 hours
  > 16 - <= 20 hours
  > 20 - <= 24 hours
  0 - <= 24 hours
  > 24 hours
- Trunks:

0 - <= 36 hours
> 36 hours
- Average Interval is reported in business hours.

Data Retained

Relating to CLEC Experience

- Report Month
- Reject Interval
- Total Number of LSRs
- Total Number of Rejects
- State and Region
- Total Number of ASRs (Trunks)

Relating to BellSouth Performance

- Not Applicable

SQM Disaggregation - Analog/Benchmark

SQM Level of Disaggregation	SQM Analog/Benchmark
Resale – Residence	Fully Mechanized: 97% <= 1 Hour
Resale – Business	Partially Mechanized: 95% <= 10 Hours
Resale – Design (Special)	Non Mechanized: 95% <= 24 Hours
Resale PBX	
Resale Centrex	
Resale ISDN	
LNP (Standalone)	
INP (Standalone)	
2W Analog Loop Design	
2W Analog Loop Non-Design	
2W Analog Loop with INP Design	
2W Analog Loop with INP Non-Design	
2W Analog Loop with LNP Design	
2W Analog Loop with LNP Non-Design	
UNE Digital Loop < DS1	
UNE Digital Loop >= DS1	
UNE Loop + Port Combinations	
UNE Combination Other	
UNE ISDN Loop	
UNE Other Design	
UNE Other Non-Design	
UNE Line Splitting	
EELs	
Switch Ports	
UNE xDSL (ADSL, HDSL, UCL)	
Line Sharing	
Local Interoffice Transport	
Local Interconnection Trunks	Trunks: 95% <= 36 Hours

SEEM Measure

SEEM	Tier I	Tier II
Yes	X	X

SEEM Disaggregation - Analog/Benchmark

SEEM Disaggregation	SEEM Analog/Benchmark
• Fully Mechanized	97% <= 1 hour
• Partially Mechanized	95% <= 10 hours
• Non-Mechanized	95% <= 24 hours
• Local Interconnection Trunks	95% <= 36 hours

O-9: Firm Order Confirmation Timeliness

Definition

Interval for Return of a Firm Order Confirmation (FOC Interval) is the average response time from receipt of valid LSR or ASR to distribution of a Firm Order Confirmation. The interval will include an electronic facilities check.

Exclusions

- Service Requests canceled by CLEC prior to being confirmed.
- Designated Holidays are excluded from the interval calculation for partially mechanized and non-mechanized LSRs/ASRs only.
- LSRs which are identified and classified as "Projects"

  Non-business hours for Partially Mechanized and Non-Mechanized LSRs are excluded from the interval calculation. The excluded time is the time outside of normal operations which can be found at the following website: http://www.interconnection.bellsouth.com/centers/html/lcsc.html

  For ASRs processed in the Local Interconnection Service Center (LISC) - From 4:30 PM All hours outside of Monday – Friday 8:00 AM – 4:30 PM CST, should be excluded.

  The hours excluded will be altered to reflect changes in the Center operating hours. The Centers will accept faxed LSRs only during posted hours of operation.

  The interval will be the amount of time accrued from receipt of the LSR until normal closing of the center if an LSR is worked using overtime hours.

  In the case of a Partially Mechanized LSR received and worked after normal business hours, the interval will be set at one (1) minute.

Business Rules

Fully Mechanized: The elapsed time from receipt of a valid electronically submitted LSR (date and time stamp in EDI or TAG) until the LSR is processed, appropriate service orders are generated and a Firm Order Confirmation is returned to the CLEC via EDI translator or TAG.

Partially Mechanized: The elapsed time from receipt of a valid electronically submitted LSR (date and time stamp in EDI, or TAG) which falls out for manual handling until appropriate service orders are issued by a BellSouth service representative via Direct Order Entry (DOE) or Service Order Negotiation Generation System (SONGS) to SOCS and a Firm Order Confirmation is returned to the CLEC via EDI translator, or TAG.

Non-Mechanized: The elapsed time from receipt of a valid paper LSR (date and time stamp of FAX or date and time paper LSRs received in LCSC) until appropriate service orders are issued by a BellSouth service representative via Direct Order Entry (DOE) or Service Order Negotiation Generation System (SONGS) to SOCS and a Firm Order Confirmation is sent to the CLEC via LON.

Interconnection Trunks: Interconnection Trunks are ordered on Access Service Requests (ASRs). ASRs are submitted to and processed by the Local Interconnection Service Center (LISC). The elapsed time is measured from receipt of a valid ASR (date and time stamp of a FAX or paper ASR received in the LISC) until the appropriate orders are issued by a BellSouth representative and a FOC issued in EXACT. Trunk data is reported as a separate category.

Note: When multiple FOCs occur on a single version of an LSR, the first FOC is used to measure the interval.

Calculation

Firm Order Confirmation Interval = (a - b)

- a = Date and Time of Firm Order Confirmation
- b = Date and Time of Service Request Receipt

Average FOC Interval = (c / d)

- c = Sum of all Firm Order Confirmation Times
- d = Number of Service Requests Confirmed in Reporting Period

FOC Interval Distribution = (e / f) X 100

- e = Service Requests Confirmed in Designated Interval
- f = Total Service Requests Confirmed in the Reporting Period

Report Structure

- Fully Mechanized, Partially Mechanized, Non-Mechanized
  - CLEC Specific
  - CLEC Aggregate
- Geographic Scope
  - State
  - Region
- Fully Mechanized:
  0 - <= 15 minutes
  > 15 - <= 30 minutes
  > 30 - <= 45 minutes
  > 45 - <= 60 minutes
  > 60 - <= 90 minutes
  > 90 - <= 120 minutes
  > 120 - <= 180 minutes
  0 - <= 3 hours
  > 3 - <= 6 hours
  > 6 - <= 12 hours
  > 12 - <= 24 hours
  > 24 - <= 48 hours
  > 48 hours
- Partially Mechanized:
  0 - <= 4 hours
  > 4 - <= 8 hours
  > 8 - <= 10 hours
  0 - <= 10 hours
  > 10 - <= 18 hours
  0 - <= 18 hours
  > 18 - <= 24 hours
  > 24 - <= 48 hours
  > 48 hours
- Non-mechanized:
  0 - <= 4 hours
  > 4 - <= 8 hours
  > 8 - <= 12 hours
  > 12 - <= 16 hours
  0 - <= 24 hours
  > 16 - <= 20 hours
  > 20 - <= 24 hours
  > 24 - <= 36 hours
  0 - <= 36 hours

> 36 - <= 48 hours
> 48 hours

- Trunks:
  0 - <= 48 hours
  > 48 hours
- Average Interval is reported in business hours

Data Retained

Relating to CLEC Experience

- Report Month
- Interval for FOC
- Total Number of LSRs
- State and Region
- Total Number of ASRs (Trunks)

Relating to BellSouth Performance

- Not Applicable

SQM Disaggregation - Analog/Benchmark

SQM Level of Disaggregation	SQM Analog/Benchmark
Resale – Residence	Fully Mechanized: 95% <= 3 Hours
Resale – Business	Partially Mechanized: 95% <= 10 Hours
Resale – Design (Special)	Non-Mechanized: 95% <= 24 Hours
Resale PBX	
Resale Centrex	
Resale ISDN	
LNP (Standalone)	
INP (Standalone)	
2W Analog Loop Design	
2W Analog Loop Non-Design	
2W Analog Loop with INP Design	
2W Analog Loop with INP Non-Design	
2W Analog Loop with LNP Design	
2W Analog Loop with LNP Non-Design	
UNE Digital Loop < DS1	
UNE Digital Loop >= DS1	
UNE Loop + Port Combinations	
UNE Combination Other	
UNE ISDN Loop	
UNE Other Design	
UNE Other Non-Design	
UNE Line Splitting	
EELs	
Switch Ports	
UNE xDSL (ADSL, HDSL, UCL)	
Line Sharing	
Local Interoffice Transport	
Local Interconnection Trunks	Trunks: 95% <= 48 Hours

SEEM Measure

SEEM	Tier I	Tier II
Yes	X	X

SEEM Disaggregation - Analog/Benchmark

SEEM Disaggregation	SEEM Analog/Benchmark
• Fully Mechanized	95% <= 3 Hours
• Partially Mechanized	95% <= 10 Hours
• Non-Mechanized	95% <= 24 Hours
• Local Interconnection Trunks	95% <= 48 Hours

O-10: Service Inquiry with LSR Firm Order Confirmation (FOC) Response Time Manual[1]

Definition

This report measures the interval and the percent within the interval from the submission of a Service Inquiry (SI) with Firm Order LSR to the distribution of a Firm Order Confirmation (FOC).

Exclusions

- Designated Holidays are excluded from the interval calculation.
- Weekend hours from 5:00 PM Friday until 8:00AM Monday are excluded from the interval calculation of the Service Inquiry.
- Canceled Requests
- Electronically Submitted Requests
- Non-business hours for Partially Mechanized and Non-Mechanized LSRs are excluded from the interval calculation. The excluded time is the time outside of normal operations which can be found at the following website: http//www.interconnection.bellsouth.com/centers/html/lcsc.html

Business Rules

This measurement combines four intervals:

1. From receipt of a valid Service Inquiry with LSR to hand off to the Service Advocacy Center (SAC) for Loop 'Look-up'.
2. From SAC start date to SAC complete date.
3. From SAC complete date to the Complex Resale Support Group (CRSG) complete date with hand off to LCSC.
4. From receipt of a valid SI/LSR in the LCSC to Firm Order Confirmation.

(A valid Service Inquiry is an inquiry that has all required fields populated correctly and has not been returned for clarification.)

Calculation

FOC Timeliness Interval with SI = (a - b)

- a = Date and Time Firm Order Confirmation (FOC) for SI with LSR returned to CLEC
- b = Date and Time SI with LSR received

Average Interval = (c / d)

- c = Sum of all FOC Timeliness Intervals with SI
- d = Total number of SIs with LSRs received in the reporting period

Percent Within Interval = (e / f) X 100

- e = Total number of Service Inquiries with LSRs received by the CRSG to distribution of FOC by the Local Carrier Service Center (LCSC)
- f = Total number of Service Inquiries with LSRs received in the reporting period

Report Structure

- CLEC Aggregate
- CLEC Specific
- Geographic Scope
  - State
  - Region

[1] *See O-9 for FOC Timeliness*

- Intervals
  0 – <= 3 days
  > 3 – <= 5 days
  0 – <=5 days
  > 5 – <= 7 days
  > 7 – <= 10 days
  > 10 – <= 15 days
  >15 days
- Average Interval measured in days

Data Retained

Relating to CLEC Experience

- Report Month
- Total Number of Requests
- SI Intervals
- State and Region

Relating to BellSouth Performance

- Not Applicable

SQM Disaggregation - Analog/Benchmark

SQM Level of Disaggregation	SQM Analog/Benchmark
• xDSL (includes UNE unbundled ADSL, HDSL and UNE Unbundled Copper Loops)	95% Returned <= 5 Business Days
• Unbundled Interoffice Transport	

SEEM Measure

SEEM	Tier I	Tier II
No		

SEEM Disaggregation - Analog/Benchmark

SEEM Disaggregation	SEEM Analog/Benchmark
• Not Applicable	Not Applicable

O-11: Firm Order Confirmation and Reject Response Completeness

Definition

A response is expected from BellSouth for every Local Service Request transaction (version). Firm Order Confirmation and Reject Response Completeness is the corresponding number of Local Service Requests received to the combination of Firm Order Confirmation and Reject Responses.

Exclusions

- Service Requests canceled by the CLEC prior to FOC or Rejected/Clarified
- Fatal Rejects
- LSRs identified as "Projects"

Business Rules

Mechanized – The number of FOCs or Auto Clarifications sent to the CLEC from EDI, or TAG in response to electronically submitted LSRs.

Partially Mechanized – The number of FOCs or Rejects sent to the CLEC from EDI, or TAG in response to electronically submitted LSRs which fall out for manual handling by the LCSC personnel.

Non-Mechanized: The number of FOCs or Rejects sent to the CLECs by FAX server.

Interconnection Trunks: Interconnection Trunks are ordered on Access Service Requests (ASRs). ASRs are submitted to and processed by the Local Interconnection Service Center (LISC). Trunk data is reported as a separate category.

For CLEC Results:

Percent responses is determined by computing the number of Firm Order Confirmations and Rejects transmitted by BellSouth and dividing by the number of Local Service Requests (all versions) received in the reporting period.

Calculation

Firm Order Confirmation / Reject Response Completeness = (a / b) X 100

- a = Total Number of Service Requests for which a Firm Order Confirmation or Reject is Sent
- b = Total Number of Service Requests Received in the Report Period

Report Structure

Fully Mechanized, Partially Mechanized, Non-Mechanized and Interconnection Trunks

- State and Region
- CLEC Specific
- CLEC Aggregate

Data Retained

Relating to CLEC Experience

- Report Month
- Total Number of LSRs
- Total Number of rejects

- Total Number of ASRs (Trunks)
- Total Number of FOCs

Relating to BellSouth Performance

- Not Applicable

SQM Disaggregation - Analog/Benchmark

SQM Level of Disaggregation	SQM Analog/Benchmark
Resale Residence	95% Returned
Resale Business	
Resale Design (Special)	
Resale PBX	
Resale Centrex	
Resale ISDN	
LNP (Standalone)	
INP (Standalone)	
2W Analog Loop Design	
2W Analog Loop Non-Design	
2W Analog Loop with INP Design	
2W Analog Loop with INP Non-Design	
2W Analog Loop with LNP Design	
2W Analog Loop with LNP Non-Design	
UNE Digital Loop < DS1	
UNE Digital Loop >= DS1	
UNE Loop + Port Combinations	
UNE Combination Other	
UNE ISDN Loop	
UNE Other Design	
UNE Other Non-Design	
UNE Line Splitting	
EELs	
Switch Ports	
UNE xDSL (ADSL, HDSL, UCL)	
Line Sharing	
Local Interoffice Transport	
Local Interconnection Trunks	

SEEM Measure

SEEM	Tier I	Tier II
Yes	X	X

SEEM Disaggregation - Analog/Benchmark

SEEM Disaggregation	SEEM Analog/Benchmark
Fully Mechanized	95% Returned
Partially Mechanized	
Non-Mechanized	
Local Interconnection Trunks	

O-12: Speed of Answer in Ordering Center

Definition

Measures the average time a customer is in queue.

Exclusions

None

Business Rules

The clock starts when the appropriate option is selected (i.e., 1 for Resale Consumer, 2 for Resale Multiline, and 3 for UNE-LNP, etc.) and the call enters the queue for that particular group in the LCSC. The clock stops when a BellSouth service representative in the LCSC answers the call. The speed of answer is determined by measuring and accumulating the elapsed time from the entry of a CLEC call into the BellSouth automatic call distributor (ACD) until a service representative in BellSouth's Local Carrier Service Center (LCSC) answers the CLEC call.

Calculation

Speed of Answer in Ordering Center = (a / b)

- a = Total seconds in queue
- b = Total number of calls answered in the Reporting Period

Report Structure

Aggregate

- CLEC – Local Carrier Service Center
- BellSouth
  - Business Service Center
- Geographic Scope
  - Region

Data Retained

Relating to CLEC Experience

- Mechanized Tracking Through LCSC Automatic Call Distributor

Relating to BellSouth Performance

- Mechanized Tracking Through BellSouth Retail Center Support System

SQM Disaggregation - Analog/Benchmark

SQM Level of Disaggregation	SQM Analog/Benchmark
Aggregate	
• CLEC – Local Carrier Service Center	Parity with Retail (Business Service Center)

SEEM Measure

SEEM	Tier I	Tier II
Yes		X

SEEM Disaggregation - Analog/Benchmark

SEEM Disaggregation	SEEM Analog/Benchmark
• CLEC - Local Carrier Service Center	Parity with Retail (Business Service Center)

Section 3: Provisioning

P-1: Mean Held Order Interval & Distribution Intervals

Definition

When delays occur in completing CLEC orders, the average period that CLEC orders are held for BellSouth reasons, pending a delayed completion, should be no worse for the CLEC when compared to BellSouth delayed orders. Calculation of the interval is the total days orders are held and pending but not completed that have passed the currently committed due date; divided by the total number of held orders. This report is based on orders still pending, held and past their committed due date. The distribution interval is based on the number of orders held and pending but not completed over 15 and 90 days. (Orders reported in the >90 day interval are also included in the >15 day interval.)

Exclusions

- Order Activities of BellSouth or the CLEC associated with internal or administrative use of local services (Record Orders, Listing Orders, Test Orders, etc.) Test order types may be C, N, R, or T
- Disconnect (D) & From (F) orders
- Orders with Appointment Code of 'A', i.e., orders for locations requiring special construction including locations where no address exists and a technician must make a field visit to determine how to get facilities to the location.

Business Rules

Mean Held Order Interval: This metric is computed at the close of each report period. The held order interval is established by first identifying all orders, at the close of the reporting interval, that both have not been reported as completed in SOCS and have passed the currently committed due date for the order and identifying all orders that have been reported as completed in SOCS after the currently committed due date for the order. For each such order, the number of calendar days between the earliest committed due date on which BellSouth had a company missed appointment and the close of the reporting period is established and represents the held order interval for that particular order. The held order interval is accumulated by the standard groupings, unless otherwise noted, and the reason for the order being held. The total number of days accumulated in a category is then divided by the number of held orders within the same category to produce the mean held order interval. The interval is by calendar days with no exclusions for Holidays or Sundays.

CLEC Specific reporting is by type of held order (facilities, equipment, other), total number of orders held, and the total and average days.

Held Order Distribution Interval: This measure provides data to report total days held and identifies these in categories of >15 days and > 90 days. (Orders counted in >90 days are also included in > 15 days).

Calculation

Mean Held Order Interval = a / b

- a = Sum of held-over-days for all Past Due Orders Held with a BellSouth Missed Appointment from the earliest BellSouth missed appointment
- b = Number of Past Due Orders Held and Pending But Not Completed and past the committed due date

Held Order Distribution Interval (for each interval) = (c / d) X 100

- c = # of Orders Held for >= 15 days or # of Orders Held for >= 90 days
- d = Total # of Past Due Orders Held and Pending But Not Completed)

Report Structure

- CLEC Specific
- CLEC Aggregate
- BellSouth Aggregate
- Circuit Breakout < 10, >= 10 (except trunks)
- Dispatch/Non-Dispatch
- Geographic Scope
  - State
  - Region

Data Retained

Relating to CLEC Experience

- Report Month
- CLEC Order Number and PON (PON)
- Order Submission Date (TICKET_ID)
- Committed Due Date (DD)
- Service Type (CLASS_SVC_DESC)
- Hold Reason
- Total Line/Circuit Count
- Geographic Scope

Note: Code in parentheses is the corresponding header found in the raw data file.

Relating to BellSouth Performance

- Report Month
- BellSouth Order Number
- Order Submission Date
- Committed Due Date
- Service Type
- Hold Reason
- Total Line/Circuit Count
- Geographic Scope

SQM Disaggregation - Analog/Benchmark

SQM Level of Disaggregation	SQM Analog/Benchmark
Resale Residence	Retail Residence
Resale Business	Retail Business
Resale Design	Retail Design
Resale PBX	Retail PBX
Resale Centrex	Retail Centrex
Resale ISDN	Retail ISDN
LNP (Standalone)	Retail Residence and Business (POTS)
INP (Standalone)	Retail Residence and Business (POTS)
2W Analog Loop Design	Retail Residence and Business Dispatch
2W Analog Loop Non-Design	Retail Residence and Business – (POTS Excluding Switch-Based Orders)
2W Analog Loop with LNP - Design	Retail Residence and Business Dispatch
2W Analog Loop with LNP- Non-Design	Retail Residence and Business – (POTS Excluding Switch-Based Orders)
2W Analog Loop with INP-Design	Retail Residence and Business Dispatch
2W Analog Loop with INP-Non-Design	Retail Residence and Business – (POTS Excluding Switch-Based Orders)

- UNE Digital Loop < DS1 ..... Retail Digital Loop < DS1
- UNE Digital Loop >= DS1 ..... Retail Digital Loop >= DS1
- UNE Loop + Port Combinations ..... Retail Residence and Business
  - Dispatch In ..... - Dispatch
  - Switch Based ..... - Switched Based
- UNE Switch Ports ..... Retail Residence and Business (POTS)
- UNE Combo Other ..... Retail Residence, Business and Design Dispatch
- UNE xDSL (HDSL, ADSL and UCL) ..... ADSL Provided to Retail
- UNE ISDN (Includes UDC) ..... Retail ISDN - BRI
- UNE Line Sharing ..... ADSL Provided to Retail
- UNE Other Design ..... Retail Design
- UNE Other Non-Design ..... Retail Residence and Business
- Local Transport (Unbundled Interoffice Transport) ..... Retail DS1/DS3 Interoffice
- Local Interconnection Trunks ..... Parity with Retail
- UNE Line Splitting ..... ADSL to Retail
- EELs ..... Retail DS1/DS3

SEEM Measure

SEEM	Tier I	Tier II
No		

SEEM Disaggregation - Analog/Benchmark

SEEM Disaggregation	SEEM Analog/Benchmark
Not Applicable	Not Applicable

P-2: Average Jeopardy Notice Interval & Percentage of Orders Given Jeopardy Notices

(Deleted)

P-2A: Jeopardy Notice Interval

Definition

When BellSouth can determine in advance that a committed due date is in jeopardy for facility delay, it will provide advance notice to the CLEC.

The interval is from the date/time the notice is released to the CLEC/BellSouth systems until 5pm on the due date of the order.

Exclusions

- Orders held for CLEC end user reasons
- Disconnect (D) and From (F) orders
- Orders with Jeopardy Notice when jeopardy is identified on the due date. This exclusion only applies when the technician on premises has attempted to provide service but must refer to Engineer or Cable Repair for facility jeopardy.
- Orders issued with a due date of < = 48 hours.

Business Rules

When BellSouth can determine in advance that a committed due date is in jeopardy for facility delay, it will provide advance notice to the CLEC. The number of committed orders in a report period is the number of orders that have a due date in the reporting period. Jeopardy notices for interconnection trunk results are usually zero as these trunks seldom experience facility delays. The Committed Due Date is considered the Confirmed Due Date. This report measures dispatched orders only. If an order is originally sent as non-dispatch and it is determined there is a facility delay, the order is converted to a dispatch code so the facility problem can be corrected. It will remain coded dispatched until completion.

Calculation

Jeopardy Interval = a - b

- a = Date and Time of Scheduled Due Date on Service Order
- b = Date and Time of Jeopardy Notice

Average Jeopardy Interval = c / d

- c = Sum of all Jeopardy Intervals
- d = Number of Orders Notified of Jeopardy in Reporting Period

Report Structure

- CLEC Specific
- CLEC Aggregate
- BellSouth Aggregate
- Mechanized Orders
- Non-Mechanized Orders
- Dispatch/Non-Dispatch
- Geographic Scope
  - State
  - Region

Data Retained

Relating to CLEC Experience

- Report Month
- CLEC Order Number and PON

- Date and Time Jeopardy Notice Sent
- Committed Due Date
- Service Type

Relating to BellSouth Performance

- Report Month
- BellSouth Order Number
- Date and Time Jeopardy Notice Sent
- Committed Due Date
- Service Type

SQM Disaggregation - Analog/Benchmark

SQM Level of Disaggregation	SQM Analog/Benchmark
• Resale Residence	95% > = 48 hours
• Resale Business	95% > = 48 hours
• Resale Design	95% > = 48 hours
• Resale PBX	95% > = 48 hours
• Resale Centrex	95% > = 48 hours
• Resale ISDN	95% > = 48 hours
• LNP (Standalone)	95% > = 48 hours
• INP (Standalone)	95% > = 48 hours
• 2W Analog Loop Design	95% > = 48 hours
• 2W Analog Loop Non-Design	95% > = 48 hours
• 2W Analog Loop with LNP - Design	95% > = 48 hours
• 2W Analog Loop with LNP- Non-Design	95% > = 48 hours
• 2W Analog Loop with INP-Design	95% > = 48 hours
• 2W Analog Loop with INP-Non-Design	95% > = 48 hours
• UNE Digital Loop < DS1	95% > = 48 hours
• UNE Digital Loop >= DS1	95% > = 48 hours
• UNE Loop + Port Combinations	95% > = 48 hours
- Dispatch In	- Dispatch In
- Switch Based	- Switch Based
• UNE Switch Ports	95% > = 48 hours
• UNE Combo Other	95% > = 48 hours
• UNE xDSL (HDSL, ADSL and UCL)	95% > = 48 hours
• UNE ISDN (Includes UDC)	95% > = 48 hours
• UNE Line Sharing	95% > = 48 hours
• UNE Other Design	95% > = 48 hours
• UNE Other Non-Design	95% > = 48 hours
• Local Transport (Unbundled Interoffice Transport)	95% > = 48 hours
• Local Interconnection Trunks	95% > = 48 hours
• UNE Line Splitting	95% > = 48 hours
• EELs	95% > = 48 hours

SEEM Measure

SEEM	Tier I	Tier II
No		

SEEM Disaggregation	SEEM Analog/Benchmark
• Not Applicable	Not Applicable

P-2B: Percentage of Orders Given Jeopardy Notices

Definition

When BellSouth can determine in advance that a committed due date is in jeopardy for facility delay, it will provide advance notice to the CLEC.

The Percent of Orders is the percentage of orders given jeopardy notices for facility delay in the count of orders confirmed in the report period.

Exclusions

- Orders held for CLEC end user reasons
- Disconnect (D) and From (F) orders

Business Rules

When BellSouth can determine in advance that a committed due date is in jeopardy for facility delay, it will provide advance notice to the CLEC. The number of committed orders in a report period is the number of orders that have a due date in the reporting period. Jeopardy notices for interconnection trunks results are usually zero as these trunks seldom experience facility delays. The Committed due date is considered the Confirmed due date. This report measures dispatched orders only. If an order is originally sent as non-dispatch and it is determined there is a facility delay, the order is converted to a dispatch code so the facility problem can be corrected. It will remain coded dispatched until completion.

Calculation

Percent of Orders Given Jeopardy Notice = (a / b) X 100

- a = Number of Orders Given Jeopardy Notices in Reporting Period
- b = Number of Orders Confirmed (due) in Reporting Period

Percent of Orders Given Jeopardy Notice > = 48 hours = (c / d) X 100

- c = Number of Orders Given Jeopardy Notice >= 48 hours in Reporting Period (electronic only)
- d = Number of Orders Given Jeopardy Notices in Reporting Period (electronic only)

Report Structure

- CLEC Specific
- CLEC Aggregate
- BellSouth Aggregate
- Mechanized Orders
- Non-Mechanized Orders
- Dispatch/Non-Dispatch
- Geograhic Scope
  - State
  - Region

Data Retained

Relating to CLEC Experience

- Report Month
- CLEC Order Number and PON

- Date and Time Jeopardy Notice sent
- Committed Due Date
- Service Type

Relating to BellSouth Performance

- Report Month
- BellSouth Order Number
- Date and Time Jeopardy Notice sent
- Committed Due Date
- Service Type

SQM Disaggregation - Analog/Benchmark

SQM Level of Disaggregation	SQM Analog/Benchmark
• Resale Residence	Retail Residence
• Resale Business	Retail Business
• Resale Design	Retail Design
• Resale PBX	Retail PBX
• Resale Centrex	Retail Centrex
• Resale ISDN	Retail ISDN
• LNP (Standalone)	Retail Residence and Business (POTS)
• INP (Standalone)	Retail Residence and Business (POTS)
• 2W Analog Loop Design	Retail Residence and Business Dispatch
• 2W Analog Loop Non-Design	Retail Residence and Business – (POTS Excluding Switch-Based Orders)
• 2W Analog Loop with LNP - Design	Retail Residence and Business Dispatch
• 2W Analog Loop with LNP - Non-Design	Retail Residence and Business – (POTS Excluding Switch-Based Orders)
• 2W Analog Loop with INP-Design	Retail Residence and Business Dispatch
• 2W Analog Loop with INP-Non-Design	Retail Residence and Business – (POTS Excluding Switch-Based Orders)
• UNE Digital Loop <DS1	Retail Digital Loop <DS1
• UNE Digital Loop >=DS1	Retail Digital Loop >=DS1
• UNE Loop + Port Combinations	Retail Residence and Business
- Dispatch In	- Dispatch In
- Switch Based	- Switch Based
• UNE Switch Ports	Retail Residence and Business (POTS)
• UNE Combo Other	Retail Residence, Business and Design Dispatch
• UNE xDSL (HDSL, ADSL and UCL)	ADSL Provided to Retail
• UNE ISDN (Includes UDC)	Retail ISDN - BRI
• UNE Line Sharing	ADSL Provided to Retail
• UNE Other Design	Retail Design
• UNE Other Non-Design	Retail Residence and Business
• Local Transport (Unbundled Interoffice Transport)	Retail DS1/DS3 Interoffice
• Local Interconnection Trunks	Parity with Retail
• UNE Line Splitting	ADSL Provided to Retail
• EELs	Retail DS1/DS3

SEEM Measure

SEEM	Tier I	Tier II
No		

SEEM Disaggregation	SEEM Analog/Benchmark
• Not Applicable	Not Applicable

P-3: Percent Missed Initial Installation Appointments

Definition

"Percent missed initial installation appointments" monitors the reliability of BellSouth commitments with respect to committed due dates to assure that the CLEC can reliably quote expected due dates to their retail customer as compared to BellSouth. This measure is the percentage of total orders processed for which BellSouth is unable to complete the service orders on the committed due dates and reported for Total misses and End User Misses.

Exclusions

- Orders canceled prior to the due date including orders that are to be provisioned on the same day they are placed. ("Zero Due Date Orders")
- Order Activities of BellSouth or the CLEC associated with internal or administrative use of local services (Record Orders, Listing Orders Test Orders, etc., Order types may be coded C, N, R or T)
- Disconnect (D) & From (F) orders
- End User Misses

Business Rules

Percent Missed Initial Installation Appointments (PMI) is the percentage of orders with completion dates in the reporting period that are past the original committed due date. Missed Appointments caused by end-user reasons will be excluded and reported separately. The first commitment date on the service order that is a missed appointment is the missed appointment code used for calculation whether it is a BellSouth missed appointment or an End User missed appointment. The "due date" is any time on the confirmed due date. Which means there cannot be a cutoff time for commitments, as certain types of orders are requested to be worked after standard business hours. Also, during Daylight Savings Time, field technicians are scheduled until 9PM in some areas and the customer is offered a greater range of intervals from which to select.

Calculation

Percent Missed Installation Appointments = (a / b) X 100

- a = Number of Orders with Completion date in Reporting Period past the Original Committed Due Date
- b = Number of Orders Completed in Reporting Period

Report Structure

- CLEC Specific
- CLEC Aggregate
- BellSouth Aggregate
- Report in Categories of <10 lines/circuits >= 10 lines/circuits (except trunks)
- Dispatch/Non-Dispatch (except Trunks)
- Geographic Scope
  - State
  - Region

Data Retained

Relating to CLEC Experience

- Report Month
- CLEC Order Number and PON (PON)
- Committed Due Date (DD)

- Completion Date (CMPLTN DD)
- Status Type
- Status Notice Date
- Standard Order Activity

Note: Code in parentheses is the corresponding header found in the raw data file.

Relatng to BellSouth Performance

- Report Month
- BellSouth Order Number
- Committed Due Date (DD)
- Completion Date (CMPLTN DD)
- Status Type
- Status Notice Date
- Standard Order Activity

SQM Disaggregation - Analog/Benchmark

SQM Level of Disaggregation	SQM Analog/Benchmark
• Resale Residence	Retail Residence
• Resale Business	Retail Business
• Resale Design	Retail Design
• Resale PBX	Retail PBX
• Resale Centrex	Retail Centrex
• Resale ISDN	Retail ISDN
• LNP (Standalone)	Retail Residence and Business (POTS)
• INP (Standalone)	Retail Residence and Business (POTS)
• 2W Analog Loop Design	Retail Residence and Business Dispatch
• 2W Analog Loop Non-Design	Retail Residence and Business – (POTS Excluding Switch- Based Orders)
• 2W Analog Loop With LNP - Design	Retail Residence and Business Dispatch
• 2W Analog Loop With LNP- Non-Design	Retail Residence and Business – (POTS Excluding Switch-Based Orders)
• 2W Analog Loop With INP-Design	Retail Residence and Business Dispatch
• 2W Analog Loop With INP-Non-Design	Retail Residence and Business – (POTS Excluding Switch-Based Orders)
• UNE Digital Loop < DS1	Retail Digital Loop < DS1
• UNE Digital Loop >= DS1	Retail Digital Loop >= DS1
• UNE Loop + Port Combinations	Retail Residence and Business
- Dispatch In	- Dispatch In
- Switch Based	- Switched Based
• UNE Switch Ports	Retail Residence and Business (POTS)
• UNE Combo Other	Retail Residence, Business and Design Dispatch
• UNE xDSL (HDSL, ADSL and UCL)	ADSL Provided to Retail
- Without Conditioning	- Without Conditioning
- With Conditioning	- With Conditioning (BellSouth does not offer this service to Retail)
• UNE ISDN	Retail ISDN - BRI
• UNE Line Sharing Without Conditioning	ADSL Provided to Retail
With Conditioning	ADSL Provided to Retail
• UNE Other Design	Retail Design
• UNE Other Non-Design	Retail Residence and Business
• Local Transport (Unbundled Interoffice Transport)	Retail DS1/DS3 Interoffice
• Local Interconnection Trunks	Parity with Retail
• UNE Line Splitting Without Conditioning	ADSL Provided to Retail
• With Conditioning	ADSL Provided to Retail
• EELs	Retail DS1/DS3
• UNE UDC/IDSL	Retail ISDN - BRI

SEEM Measure

SEEM	Tier I	Tier II
Yes	X	X

SEEM Disaggregation - Analog/Benchmark

SEEM Disaggregation	SEEM Analog/Benchmark
• Resale Residence	Retail Residence
• Resale Business	Retail Business
• Resale Design	Retail Design
• Resale PBX	Retail PBX
• Resale Centrex	Retail Centrex
• Resale ISDN	Retail ISDN
• LNP (Standalone)	Retail Residence and Business (POTS)
• INP (Standalone)	Retail Residence and Business (POTS)
• 2W Analog Loop Design	Retail Residence and Business Dispatch
• 2W Analog Loop Non-Design	Retail Residence and Business – (POTS Excluding Switch-Based Orders)
• 2W Analog Loop With LNP - Design	Retail Residence and Business Dispatch
• 2W Analog Loop With LNP- Non-Design	Retail Residence and Business – (POTS Excluding Switch-Based Orders)
• 2W Analog Loop With INP-Design	Retail Residence and Business Dispatch
• 2W Analog Loop With INP-Non-Design	Retail Residence and Business – (POTS Excluding Switch-Based Orders)
• UNE Digital Loop < DS1	Retail Digital Loop < DS1
• UNE Digital Loop >= DS1	Retail Digital Loop >=DS1
• UNE Loop + Port Combinations	Retail Residence and Business
- Dispatch In	- Dispatched In
- Switch Based	- Switch Based
• UNE Switch Ports	Retail Residence and Business (POTS)
• UNE Combo Other	Retail Residence, Business and Design Dispatch
• UNE xDSL (HDSL, ADSL and UCL)	ADSL Provided to Retail
- Without Conditioning	- Without Conditioning
- With Conditioning	- With Conditioning (BellSouth does not offer this service to Retail)
• UNE ISDN	Retail ISDN - BRI
• UNE Line Sharing Without Conditioning	ADSL Provided to Retail
With Conditioning	ADSL Provided to Retail
• Local Transport (Unbundled Interoffice Transport)	Retail DS1/DS3 Interoffice
• Local Interconnection Trunks	Parity with Retail
• UNE Line Splitting Without Conditioning	ADSL Provided to Retail
• With Conditioning	ADSL Provided to Retail
• UNE Other Design	Retail Design
• UNE Other Non-Design	Retail Residence and Business
• EELs	Retail DS1/DS3
• UNE UDC/IDSL	Retail ISDN - BRI

P-3A: Percent Missed Installation Appointments Including Subsequent Appointments

(Deleted)

P-4: Average Completion Interval (OCI) & Order Completion Interval Distribution

Definition

The "average completion interval" measure monitors the interval of time it takes BellSouth to provide service for the CLEC or its own customers. The "Order Completion Interval Distribution" provides the percentages of orders completed within certain time periods. This report measures how well BellSouth meets the interval offered to customers on service orders.

Exclusions

- Canceled Service Orders
- Order Activities of BellSouth or the CLEC associated with internal or administrative use of local services (Record Orders, Listing Orders, Test Orders, etc.)
- Disconnect (D & F) orders (Except "D" orders associated with LNP Standalone)
- "L" Appointment coded orders (where the customer has requested a later than offered interval)
- End user-caused misses

Business Rules

The actual completion interval is determined for each order processed during the reporting period. The completion interval is the elapsed time from when BellSouth issues a FOC or SOCS date time stamp receipt of an order from the CLEC to BellSouth's actual order completion date. The clock starts when a valid order number is assigned by SOCS and stops when the technician or system completes the order in SOCS. Elapsed time for each order is accumulated for each reporting dimension. The accumulated time for each reporting dimension is then divided by the associated total number of orders completed. Orders that are worked on zero due dates are calculated with a .33-day interval (8 hours) in order to report a portion of a day interval. These orders are issued and worked/completed on the same day. They can be either flow through orders (no field work-non-dispatched) or field orders (dispatched).

The interval breakout for UNE and Design is: 0-5 = 0-< 5, 5-10 = 5-<10, 10-15 = 10-< 15, 15-20 = 15- < 20, 20-25 = 20-< 25, 25-30 = 25-< 30, >= 30 = 30 and greater.

Calculation

Completion Interval = (a - b)

- a = Completion Date
- b = FOC/SOCS date time-stamp (application date)

Average Completion Interval = (c / d)

- c = Sum of all Completion Intervals
- d = Count of Orders Completed in Reporting Period

Order Completion Interval Distribution (for each interval) = (e / f) X 100

- e = Service Orders Completed in "X" days
- f = Total Service Orders Completed in Reporting Period

Report Structure

- CLEC Specific
- CLEC Aggregate
- BellSouth Aggregate
- Dispatch/Non-Dispatch categories applicable to all levels except trunks
- Residence and Business reported in day intervals = 0,1,2,3,4,5,5+
- UNE and Design reported in day intervals =0-5,5-10,10-15,15-20,20-25,25-30, >= 30
- All Levels are reported <10 line/circuits; >= 10 line/circuits (except trunks)

- Geographic Scope
  - State
  - Region

Data Retained

Relating to CLEC Experience

- Report Month
- CLEC Company Name
- Order Number (PON)
- Application Date and Time
- Completion Date (CMPLTN_DT)
- Service Type (CLASS_SVC_DESC)
- Geographic Scope

Note: Code in parentheses is the corresponding header found in the raw data file.

Relating to BellSouth Performance

- Report Month
- BellSouth Order Number
- Order Submission Date and Time
- Order Completion Date and Time
- Service Type
- Geographic Scope

SQM Disaggregation - Analog/Benchmark

SQM Level of Disaggregation	SQM Analog/Benchmark
Resale Residence	Retail Residence
Resale Business	Retail Business
Resale Design	Retail Design
Resale PBX	Retail PBX
Resale Centrex	Retail Centrex
Resale ISDN	Retail ISDN
LNP (Standalone)	Retail Residence and Business (POTS)
INP (Standalone)	Retail Residence and Business (POTS)
2W Analog Loop Design	Retail Residence and Business Dispatch
2W Analog Loop Non-Design	Retail Residence and Business – (POTS Excluding Switch-Based Orders)
2W Analog Loop with LNP - Design	Retail Residence and Business Dispatch
2W Analog Loop with LNP- Non-Design	Retail Residence and Business – (POTS Excluding Switch-Based Orders)
2W Analog Loop with INP-Design	Retail Residence and Business Dispatch
2W Analog Loop with INP-Non-Design	Retail Residence and Business – (POTS Excluding Switch-Based Orders)
UNE Digital Loop < DS1	Retail Digital Loop < DS1
UNE Digital Loop >= DS1	Retail Digital Loop >= DS1
UNE Loop + Port Combinations	Retail Residence and Business
- Dispatch In	- Dispatch In
- Switch Based	- Switch Based
UNE Switch Ports	Retail Residence and Business (POTS)
UNE Combo Other	Retail Residence, Business and Design Dispatch
UNE xDSL (HDSL, ADSL and UCL)	
- Without Conditioning	- <= 5 Days
- With Conditioning	- <= 12 Days
UNE ISDN	Retail ISDN - BRI
UNE Line Sharing Without Conditioning	ADSL Provided to Retail

With Conditioning ..... <= 12 Days
- Local Transport (Unbundled Interoffice Transport) ..... Retail DS1/DS3 Interoffice
- Local Interconnection Trunks ..... Parity with Retail
- UNE Line Splitting Without Conditioning ..... ADSL Provided to Retail
- With Conditioning ..... <= 12 Days
- UNE Other Design ..... Retail Design
- UNE Other Non-Design ..... Retail Residence and Business
- EELs ..... Retail DS1/DS3
- UNE UDC/IDSL ..... Retail ISDN - BRI

SEEM Measure

SEEM	Tier I	Tier II
Yes	X	X

SEEM Disaggregation - Analog/Benchmark

SEEM Disaggregation	SEEM Analog/Benchmark
Resale Residence	Retail Residence
Resale Business	Retail Business
Resale Design	Retail Design
Resale PBX	Retail PBX
Resale Centrex	Retail Centrex
Resale ISDN	Retail ISDN
LNP (Standalone)	Retail Residence and Business (POTS)
INP (Standalone)	Retail Residence and Business (POTS)
2W Analog Loop Design	Retail Residence and Business Dispatch
2W Analog Loop Non-Design	Retail Residence and Business – (POTS Excluding Switch-Based Orders)
2W Analog Loop with LNP - Design	Retail Residence and Business Dispatch
2W Analog Loop with LNP- Non-Design	Retail Residence and Business – (POTS Excluding Switch-Based Orders)
2W Analog Loop with INP-Design	Retail Residence and Business Dispatch
2W Analog Loop with INP-Non-Design	Retail Residence and Business – (POTS Excluding Switch-Based Orders)
UNE Digital Loop < DS1	Retail Digital Loop < DS1
UNE Digital Loop >= DS1	Retail Digital Loop >=DS1
UNE Loop + Port Combinations	Retail Residence and Business
- Dispatch In	- Dispatch In
- Switch Based	- Switch Based
UNE Switch Ports	Retail Residence and Business (POTS)
UNE Combo Other	Retail Residence, Business and Design Dispatch
UNE xDSL (HDSL, ADSL and UCL)	
- Without Conditioning	- <= 5 Days
- With Conditioning	- <= 12 Days
UNE ISDN	Retail ISDN - BRI
UNE Line Sharing Without Conditioning	ADSL Provided to Retail
With Conditioning	<= 12 Days
Local Transport (Unbundled Interoffice Transport)	Retail DS1/DS3 Interoffice
Local Interconnection Trunks	Parity with Retail
UNE Line Splitting Without Conditioning	ADSL Provided to Retail
With Conditioning	<= 12 Days
UNE Other Design	Retail Design
UNE Other Non-Design	Retail Residence and Business
EELs	Retail DS1/DS3
UNE UDC/IDSL	Retail ISDN/BRI

P-4A: Average Order Completion and Completion Notice Interval (AOCCNI) Distribution

(Deleted)

P-5: Average Completion Notice Interval

Definitions

The Completion Notice Interval is the elapsed time between the BellSouth reported completion of work and the issuance of a valid completion notice to the CLEC.

Exclusions

- Canceled Service Orders
- Order Activities of BellSouth or the CLEC associated with internal or administrative use of local services (Record Orders, Listing Orders, Test Orders, etc.) Test order types may be C, N, R, or T.
- D & F orders (Exception: "D" orders associated with LNP Standalone)

Business Rules

Measurement on interval of completion date and time entered by a field technician on dispatched orders, and 5PM start time on the due date for non-dispatched orders; to the release of a notice to the CLEC/BellSouth of the completion status. The field technician notifies the CLEC the work was complete and then he/she enters the completion time stamp information in his/her computer. This information switches through to the SOCS systems either completing the order or rejecting the order to the Work Management Center (WMC). If the completion is rejected, it is manually corrected and then completed by the WMC. The notice is returned on each individual order.

The start time for all orders is the completion stamp either by the field technician or the 5PM due date stamp; the end time for mechanized orders is the time stamp the notice was delivered to the CLEC interface (LENS, EDI, OR TAG). For non-mechanized orders-the end time will be date and timestamp of order update from the FAX record via LON or C-SOTS system. For the retail analog, the start time is when the technician completes the order and the end time is when the order status is changed to complete in SOCS.

Calculation

Completion Notice Interval = (a - b)

- a = Date and Time of Notice of Completion
- b = Date and Time of Work Completion

Average Completion Notice Interval = c / d

- c = Sum of all Completion Notice Intervals
- d = Number of Orders with Notice of Completion in Reporting Period

Report Structure

- CLEC Specific
- CLEC Aggregate
- BellSouth Aggregate
- Mechanized Orders
- Non-Mechanized Orders
- Dispatch/Non-Dispatch
- Reporting intervals in Hours; 0,1- <= 2, > 2 - <= 4, > 4 - <= 8, > 8 - <= 12, > 12- <= 24, > 24 plus Overall Average Hour Interval
- Reported in categories of <10 line / circuits; >= 10 line/circuits (except trunks)
- Geographic Scope
  - State
  - Region

Data Retained

Relating to CLEC Experience

- Report Month
- CLEC Order Number (so_nbr)
- Work Completion Date (cmpltn_dt)
- Work Completion Time
- Completion Notice Availability Date
- Completion Notice Availability Time
- Service Type
- Geographic Scope

Note: Code in parentheses is the corresponding header found in the raw data file.

Relating to BellSouth Performance

- Report Month
- BellSouth Order Number (so_nbr)
- Work Completion Date (cmpltn_dt)
- Work Completion Time
- Completion Notice Availability Date
- Completion Notice Availability Time
- Service Type
- Geographic Scope

Note: Code in parentheses is the corresponding header found in the raw data file.

SQM Disaggregation - Analog/Benchmark

SQM Level of Disaggregation	SQM Analog/Benchmark
Resale Residence	Retail Residence
Resale Business	Retail Business
Resale Design	Retail Design
Resale PBX	Retail PBX
Resale Centrex	Retail Centrex
Resale ISDN	Retail ISDN
LNP (Standalone)	Retail Residence and Business (POTS)
INP (Standalone)	Retail Residence and Business (POTS)
2W Analog Loop Design	Retail Residence and Business Dispatch
2W Analog Loop Non-Design	Retail Residence and Business – (POTS Excluding Switch-Based Orders)
2W Analog Loop with LNP - Design	Retail Residence and Business Dispatch
2W Analog Loop with LNP- Non-Design	Retail Residence and Business - POTS Excluding Switch-Based Orders
2W Analog Loop with INP-Design	Retail Residence and Business Dispatch
2W Analog Loop with INP-Non-Design	Retail Residence and Business - POTS Excluding Switch-Based Orders
UNE Digital Loop < DS1	Retail Digital Loop < DS1
UNE Digital Loop >= DS1	Retail Digital Loop >= DS1
UNE Loop + Port Combinations	Retail Residence and Business
- Dispatch In	- Dispatch In
- Switch Based	- Switch Based
UNE Switch Ports	Retail Residence and Business (POTS)
UNE Combo Other	Retail Residence, Business and Design Dispatch
UNE xDSL (HDSL, ADSL and UCL)	ADSL Provided to Retail

- UNE ISDN (Includes UDC) ..... Retail ISDN - BRI
- UNE Line Sharing ..... ADSL Provided to Retail
- Local Transport (Unbundled Interoffice Transport) ..... Retail DS1/DS3 Interoffice
- Local Interconnection Trunks ..... Parity with Retail
- UNE Line Splitting ..... ADSL to Retail
- UNE Other Design ..... Retail Design
- UNE Other Non-Design ..... Retail Residence and Business
- EELs ..... Retail DS1/DS3

SEEM Measure

SEEM	Tier I	Tier II
No		

SEEM Disaggregation - Analog/Benchmark

SEEM Disaggregation	SEEM Analog/Benchmark
• Not Applicable	Not Applicable

P-6: % Completions/Attempts without Notice or < 24 hours Notice

Definition

The purpose of this measure is to report if BellSouth is returning a FOC to the CLEC in time for the CLEC to notify their customer of the scheduled date.

Exclusions

- Canceled Orders
- Expedited Orders
- "0" dated orders or any request where the subscriber requested an earlier due date of < 24 hours prior to the original commitment date, or any LSR received < 24 hours prior to the original commitment date.

Business Rules

For CLEC Results:

Calculation would exclude any successful or unsuccessful service delivery where the CLEC was informed at least 24 hours in advance. BellSouth may also exclude from calculation any LSRs received from the requesting CLEC with less than 24 hour notice prior to the commitment date.

Calculation

Percent Completions or Attempts without Notice or with Less Than 24 Hours Notice = (a / b) X 100

- a = Completion Dispatches (Successful and Unsuccessful) With No FOC or FOC Received < 24 Hours of Original Committed Due Date
- b = All Completions

Report Structure

- CLEC Specific
- CLEC Aggregate
- Dispatch /Non-Dispatch
- Total Orders FOC < 24 Hours
- Total Completed Service Orders
- % FOC < 24 Hours
- Geographic Scope
  - State
  - Region

Data Retained

Relating to CLEC Experience

- Committed Due Date (DD)
- FOC End Timestamp
- Report Month
- CLEC Order Number and PON

Relating to BellSouth Performance

- Not Applicable

SQM Disaggregation - Analog/Benchmark

SQM Level of Disaggregation	SQM Analog/Benchmark
• Resale Residence	<= 5%
• Resale Business	
• Resale Design	
• Resale PBX	
• Resale Centrex	
• Resale ISDN	
• LNP (Standalone)	
• INP (Standalone)	
• 2W Analog Loop Design	
• 2W Analog Loop Non-Design	
• 2W Analog Loop Design with LNP	
• 2W Analog Loop Non-Design with LNP	
• 2W Analog Loop Design with INP	
• 2W Analog Loop Non-Design with INP	
• UNE Digital Loop < DS1	
• UNE Digital Loop >= DS1	
• UNE Loop + Port Combinations	
- Dispatch In	
- Switch Based	
• UNE Switch Ports	
• UNE Combo Other	
• UNE xDSL (HDSL, ADSL and UCL)	
• UNE ISDN (Includes UDC)	
• UNE Line Sharing	
• UNE Line Splitting	
• Local Transport (Unbundled Interoffice Transport)	
• Local Interconnection Trunks	
• EELS	

SEEM Measure

SEEM	Tier I	Tier II
No		

SEEM Disaggregation - Analog/Benchmark

SEEM Disaggregation	SEEM Analog/Benchmark
• Not Applicable	Not Applicable

P-6: % Completions/Attempts without Notice or < 24 hours Notice

P-7: Coordinated Customer Conversions Interval

Definition

This report measures the average time it takes BellSouth to disconnect an unbundled loop from the BellSouth switch and cross connect it to CLEC equipment. This measurement applies to service orders with INP and LNP, and where the CLEC has requested BellSouth to provide a coordinated cutover.

Exclusions

- Any order canceled by the CLEC will be excluded from this measurement.
- Delays due to CLEC following disconnection of the unbundled loop
- Unbundled Loops where there is no existing subscriber loop and loops where coordination is not requested.

Business Rules

Where the service order includes LNP, the interval includes the total time for the cutover including the translation time to place the line back in service on the ported line. When the service order includes INP, the interval includes the total time for the cutover including the translation time to place the link back in service on the ported line. The interval is calculated for the entire cutover time for the service order and then divided by items worked in that time to give the average per-item interval for each service order.

Calculation

Coordinated Customer Conversions Interval = (a - b)

- a = Completion Date and Time for Cross Connection of a Coordinated Unbundled Loop
- b = Disconnection Date and Time of an Coordinated Unbundled Loop

Percent Coordinated Customer Conversions (for each interval) = (c / d) X 100

- c = Total number of Coordinated Customer Conversions for each interval
- d = Total Number of Unbundled Loop with Coordinated Conversions (items) for the reporting period

Report Structure

- CLEC Specific
- CLEC Aggregate
- The interval breakout is 0-5 = 0-<=5, 5-15 = >5-<=15, >=15 = 15 and greater, plus Overall Average Interval
- Geographic Scope
  - State
  - Region

Data Retained

Relating to CLEC Experience

- Report Month
- CLEC Order Number
- Committed Due Date (DD)
- Service Type (CLASS_SVC_DESC)
- Cutover Start Time
- Cutover Completion time
- Portability Start and Completion Times (INP orders)
- Total Conversions (Items)

Note: Code in parentheses is the corresponding header found in the raw data file.

Relating to BellSouth Performance

- No BellSouth Analog Exists

SQM Disaggregation - Analog/Benchmark

SQM Level of Disaggregation	SQM Analog/Benchmark
• Unbundled Loops with INP	95% <= 15 minutes
• Unbundled Loops with LNP	95% <= 15 minutes

SEEM Measure

SEEM	Tier I	Tier II
Yes	X	X

SEEM Disaggregation - Analog/Benchmark

SEEM Disaggregation	SEEM Analog/Benchmark
• Unbundled Loops With INP	95% <= 15 minutes
• Unbundled Loops With LNP	95% <= 15 minutes

P-7A: Coordinated Customer Conversions – Hot Cut Timeliness % within Interval and Average Interval

Definition

This category measures whether BellSouth begins the cutover of an unbundled loop on a coordinated and/or a time specific order at the CLEC requested start time. It measures the percentage of orders where the cut begins within 15 minutes of the requested start time of the order and the average interval.

Exclusions

- Any order canceled by the CLEC will be excluded from this measurement.
- Delays caused by the CLEC
- Unbundled Loops where there is no existing subscriber loop and loops where coordination is not requested.
- All unbundled loops on multiple loop orders after the first loop
- Test Orders

Business Rules

This report measures whether BellSouth begins the cutover of an unbundled loop on a coordinated and/or a time specific order at the CLEC requested start time. The cut is considered on time if it starts 15 minutes before or after the requested start time. Using the scheduled time and the actual cutover start time, the measurement will calculate the percent within interval and the average interval. If a cut involves multiple lines, the cut will be considered "on time" if the first line is cut within the interval. <= 15 minutes includes intervals that began 15:00 minutes or less before the scheduled cut time and cuts that began 15 minutes or less after the scheduled cut time; >15 minutes, <= 30 minutes includes cuts within 15:00 – 30:00 minutes either prior to or after the scheduled cut time; >30 minutes includes cuts greater than 30:00 minutes either prior to or after the scheduled cut time. If IDLC is involved, a four hour window applies to the start time. (8 A.M. to Noon or 1 P.M. to 5 P.M.) This only applies if BellSouth notifies the CLEC by 10:30 A.M. on the day before the due date that the service is on IDLC.

Calculation

% within Interval = (a / b) X 100

- a = Total Number of Coordinated Unbundled Loop Orders for the interval
- b = Total Number of Coordinated Unbundled Loop Orders for the reporting period

Interval = (c - d)

- c = Scheduled Time for Cross Connection of a Coordinated Unbundled Loop Order
- d = Actual Start Date and Time of a Coordinated Unbundled Loop Order

Average Interval = (e / f)

- Sum of all Intervals
- Total Number of Coordinated Unbundled Loop Orders for the reporting period.

Report Structure

- CLEC Specific
- CLEC Aggregate
  Reported in intervals of early, on time and late cuts % <= 15 minutes; % >15 minutes, <= 30 minutes; % >30 minutes, plus Overall Average Interval
- Geographic Scope
  - State
  - Region
- Percentages are reported in intervals of early, on time and late cuts for IDLC and non-IDLC cuts

  On Time (Non-IDLC)
  <= 15 minutes
  Note: This is a 30-minute bucket representing a cut that begins 15 minutes or less before or after the scheduled start time.

  Early (Non-IDLC)
  >15 minutes - <= 30 minutes
  >30 minutes - <= 60 minutes
  >60 minutes - <= 120 minutes
  >120 minutes - <= 180 minutes
  >180 minutes - <= 240 minutes
  <= 240 minutes

  Late (Non-IDLC)
  >15 minutes - <= 30 minutes
  >30 minutes - <= 60 minutes
  >60 minutes - <= 120 minutes
  >120 minutes - <= 180 minutes
  >180 minutes - <= 240 minutes
  >240 minutes
  Overall Average Interval for non-IDLC

  On Time (IDLC)
  <= 2 hours
  Note: This is a 4-hour bucket representing a cut involving IDLC that begins 2 hours or less before or after the scheduled start time

  Early (IDLC)
  >2 hours

  Late (IDLC)
  >2 hours
  Overall Average Interval for IDLC

Data Retained

Relating to CLEC Experience

- Report Month
- CLEC Order Number (so_nbr)
- Committed Due Date (DD)
- Service Type (CLASS_SVC_DESC)
- Cutover Scheduled Start Time
- Cutover Actual Start Time
- Total Conversions Orders

Note: Code in parentheses is the corresponding header found in the raw data file.

Relating to BellSouth Performance

- No BellSouth Analog exists

SQM Disaggregation - Analog/Benchmark

SQM Level of Disaggregation	SQM Analog/Benchmark
• Product Reporting Level	95% within + or – 15 Minutes of Scheduled Start Time
- SL1 Time Specific	
- SL1 Non-Time Specific	
- SL2 Time Specific	
- SL2 Non-Time Specific	
- SL1 IDLC	95% within 4-Hour Window
- SL2 IDLC	

SEEM Measure

SEEM	Tier I	Tier II
Yes	X	X

SEEM Disaggregation - Analog/Benchmark

SEEM Disaggregation	SEEM Analog/Benchmark
- SL1 Time Specific	95% within + or – 15 Minutes of Scheduled Start Time
- SL1 IDLC	
- SL1 Non-Time Specific	
- SL2 Time Specific	
- SL2 Non-Time Specific	95% within 4-Hour Window
- SL2 IDLC	

P-7B: Coordinated Customer Conversions – Average Recovery Time

Definition

Measures the time between notification and resolution by BellSouth of a service outage found that can be isolated to the BellSouth side of the network. The time between notification and resolution by BellSouth must be measured to ensure that CLEC customers do not experience unjustifiable lengthy service outages during a Coordinated Customer Conversion. This report measures outages associated with Coordinated Customer Conversions prior to service order completion.

Exclusions

- Cutovers where service outages are due to CLEC caused reasons when the CLEC agrees
- Cutovers where service outages are due to end-user caused reasons when the CLEC agrees
- Test Orders

Business Rules

Measures the outage duration time related to Coordinated Customer Conversions from the initial trouble notification until the trouble has been restored and the CLEC has been notified. The duration time is defined as the time from the initial trouble notification until the trouble has been restored and the CLEC has been notified. The interval is calculated on the total outage time for the circuits divided by the total number of outages restored during the report period to give the average outage duration.

Calculation

Recovery Time = (a - b)

- a = Date and Time That Trouble is Closed by CLEC
- b = Date and Time Initial Trouble is Opened with BellSouth

Average Recovery Time = (c / d)

- c = Sum of all the Recovery Times per circuit
- d = Number of Troubles per circuit Referred to BellSouth

Report Structure

- CLEC Specific
- CLEC Aggregate
- Geographic Scope
  - State
  - Region

Data Retained

Relating to CLEC Experience

- Report Month
- CLEC Company Name
- CLEC Order Number (so_nbr)
- Committed Due Date (DD)
- Service Type (CLASS_SVC_DESC)
- CLEC Acceptance Conflict (CLEC_CONFLICT)
- CLEC Conflict Resolved (CLEC_CON_RES)
- CLEC Conflict MFC (CLEC_CONFLICT_MFC)

- Total Conversion Orders

Note: Code in parentheses is the corresponding header found in the raw data file.

Relating to BellSouth Performance

- None

SQM Disaggregation - Analog/Benchmark

SQM Level of Disaggregation	SQM Analog/Benchmark
• Unbundled Loops with INP	<= 5 Hours
• Unbundled Loops with LNP	<= 5 Hours

SEEM Measure

SEEM	Tier I	Tier II
No		

SEEM Disaggregation - Analog/Benchmark

SEEM Disaggregation	SEEM Analog/Benchmark
• Not Applicable	Not Applicable

P-7C: Hot Cut Conversions - % Provisioning Troubles Received within 7 Days of a Completed Service Order

Definition

The Percent Provisioning Troubles received within 7 days of a completed service order associated with a Hot Cut Conversion (CCC) measures the quality and accuracy of Coordinated Customer Conversion Activities.

Exclusions

- Any order cancelled by the CLEC
- Troubles caused by Customer Provided Equipment
- Test Orders

Business Rules

Measures the quality and accuracy of completed service orders associated with Coordinated and Non-coordinated Customer Conversions. The first trouble report received on a circuit ID within 7 days following a service order completion is counted in this measure. Subsequent trouble reports are measured in Repeat Report Rate. Reports are calculated searching in the prior report period for completed Coordinated Customer Conversion service orders and following 7 days after the completion of the service order for a trouble report issue date.

Calculation

% Provisioning Troubles within 7 days of service order completion = (a / b) X 100

- a = The sum of all CCC Circuits with a trouble within 7 days following service order(s) completion
- b = The total number of CCC service order circuits completed in the previous report calendar month

Report Structure

- CLEC Specific
- CLEC Aggregate
- Dispatch/Non-Dispatch
- Geographic Scope
  - State
  - Region

Data Retained

Relating to CLEC Experience

- Report Month
- CLEC Order Number (so_nbr)
- PON
- Order Submission Date (TICKET_ID)
- Order Submission Time (TICKET_ID)
- Status Type
- Status Notice Date
- Standard Order Activity
- Geographic Scope
- Total Conversion Circuits

Note: Code in parentheses is the corresponding header found in the raw data file.

Relating to BellSouth Performance

- No BellSouth Analog exists

SQM Disaggregation - Analog/Benchmark

SQM Level of Disaggregation	SQM Analog/Benchmark
• UNE Loop Design	<= 3%
• UNE Loop Non-Design	<= 3%

SEEM Measure

SEEM	Tier I	Tier II
Yes	X	X

SEEM Disaggregation - Analog/Benchmark

SEEM Disaggregation	SEEM Analog/Benchmark
• UNE Loop Design	<= 3%
• UNE Loop Non-Design	<= 3%

P-8: Cooperative Acceptance Testing - % of xDSL Loops Successfully Passing Cooperative Testing

Definition

A loop will be considered successfully cooperatively tested when both the CLEC and BellSouth representatives agree that the loop meets the technical specifications set forth in TR 73600.

Exclusions

- Testing failures due to CLEC (incorrect contact number, CLEC not ready, etc.)
- xDSL lines with no request for cooperative testing
- Test Orders

Business Rules

When a BellSouth technician finishes delivering an order for an xDSL loop where the CLEC order calls for cooperative testing at the customer's premise, the BellSouth technician is to call a toll free number to the CLEC testing center. The BellSouth technician and the CLEC representative at the center then test the line. As an example of the type of testing performed, the testing center may ask the technician to put a short on the line so that the center can run a test to see if it can identify the short. CLEC caused failures will be captured in the raw data files.

Calculation

Cooperative Acceptance Testing - % of xDSL Loops Successfully Tested = (a / b) X 100

- a = Total number of successful xDSL cooperative tests for xDSL lines where cooperative testing was requested in the reporting period
- b = Total Number of xDSL line tests requested by the CLEC and scheduled in the reporting period

Report Structure

- CLEC Specific
- CLEC Aggregate
- Type of Loop Tested
- Geographic Scope
  - State
  - Region

Data Retained

Relating to CLEC Experience

- Report Month
- CLEC Company Name (OCN)
- CLEC Order Number (so_nbr) and PON (PON)
- Committed Due Date (DD)
- Service Type (CLASS_SVC_DESC)
- Acceptance Testing Completed (ACCEPT_TESTING)
- Acceptance Testing Declined (ACCEPT_TESTING)
- Total xDSL Orders
- Missed Appointments Code (SO_MISSED_CMMT_CD)

Note: Code in parentheses is the corresponding header found in the raw data file.

Relating to BellSouth Performance

- No BellSouth Analog Exists

SQM Disaggregation - Analog/Benchmark

SQM Level of Disaggregation	SQM Analog/Benchmark
• UNE xDSL	95% of Lines Successfully Tested
- ADSL	
- HDSL	
- UCL	
- OTHER	

SEEM Measure

SEEM	Tier I	Tier II
Yes	X	X

SEEM Disaggregation - Analog/Benchmark

SEEM Disaggregation	SEEM Analog/Benchmark
• UNE xDSL	95% of Lines Successfully Tested
- ADSL	
- HDSL	
- UCL	
- Other	

P-9: % Provisioning Troubles within 30 Days of Service Order Completion

Definition

Percent Provisioning Troubles within 30 days of Service Order Completion measures the quality and accuracy of Service order activities.

Exclusions

- Cancelled Service Orders
- Order Activities of BellSouth or the CLEC associated with internal or administrative use of local services (Record Orders, Listing Orders, Test Orders, etc.) Test order types may be C, N, R, or T.
- D & F orders
- Trouble reports caused and closed out to Customer Provided Equipment (CPE)

Business Rules

Measures the quality and accuracy of completed orders. The first trouble report received after service order completion is counted in this measure. Subsequent trouble reports are measured in Repeat Report Rate. Reports are calculated searching in the prior report period for completed service orders and following 30 days after completion of the service order for a trouble report issue date.

D & F orders are excluded as there is no subsequent activity following a disconnect.

Note: Standalone LNP historical data is not available in the maintenance systems (LMOS or WFA).

Calculation

% Provisioning Troubles within 30 days of Service Order Activity = (a / b) X 100

- a = Trouble reports on all completed orders within 30 days following service order(s) completion
- b = All Service Orders completed in the previous report calendar month

Report Structure

- CLEC Specific
- CLEC Aggregate
- BellSouth Aggregate
- Reported in categories of <10 line/circuits; >= 10 line/circuits (except trunks)
- Dispatch /Non-Dispatch (except trunks)
- Geographic Scope
  - State
  - Region

Data Retained

Relating to CLEC Experience

- Report Month
- CLEC Order Number and PON
- Order Submission Date (TICKET_ID)
- Order Submission Time (TICKET_ID)
- Status Type
- Status Notice Date

- Standard Order Activity
- Geographic Scope

Note: Code in parentheses is the corresponding header found in the raw data file.

Relating to BellSouth Performance

- Report Month
- BellSouth Order Number
- Order Submission Date
- Order Submission Time
- Status Type
- Status Notice Date
- Standard Order Activity
- Geographic Scope

SQM Disaggregation - Analog/Benchmark

SQM Level of Disaggregation	SQM Analog/Benchmark
Resale Residence	Retail Residence
Resale Business	Retail Business
Resale Design	Retail Design
Resale PBX	Retail PBX
Resale Centrex	Retail Centrex
Resale ISDN	Retail ISDN
LNP (Standalone)	Retail Residence and Business (POTS)
INP (Standalone)	Retail Residence and Business (POTS)
2W Analog Loop Design	Retail Residence and Business Dispatch
2W Analog Loop Non-Design	Retail Residence and Business - (POTS Excluding Switch-Based Orders)
2W Analog Loop with LNP Design	Retail Residence and Business Dispatch
2W Analog Loop with LNP Non-Design	Retail Residence and Business - (POTS Excluding Switch-Based Orders)
2W Analog Loop with INP Design	Retail Residence and Business Dispatch
2W Analog Loop with INP Non-Design	Retail Residence and Business (POTS - Excluding Switch-Based Orders)
UNE Digital Loop < DS1	Retail Digital Loop < DS1
UNE Digital Loop >= DS1	Retail Digital Loop >= DS1
UNE xDSL (HDSL, ADSL and UCL)	ADSL provided to Retail
UNE ISDN (Includes UDC)	Retail ISDN BRI
UNE Line Sharing	ADSL Provided to Retail
UNE Loop + Port Combinations	Retail Residence and Business
- Dispatch In	- Dispatch In
- Switch-Based	- Switch Based
UNE Switch Ports	Retail Residence and Business (POTS)
UNE Combo Other	Retail Residence, Business and Design Dispatch (Including Dispatch Out and Dispatch In)
Local Transport (Unbundled Interoffice Transport)	Retail DS1/DS3 Interoffice
UNE Other Non-Design	Retail Residence and Business
UNE Other Design	Retail Design
Local Interconnection Trunks	Parity with Retail
UNE Line Splitting	ADSL to Retail
EELs	Retail DS1/DS3

SEEM Measure

SEEM	Tier I	Tier II
Yes	X	X

SEEM Disaggregation - Analog/Benchmark

SEEM Disaggregation	SEEM Analog/Benchmark
• Resale Residence	Retail Residence
• Resale Business	Retail Business
• Resale Design	Retail Design
• Resale PBX	Retail PBX
• Resale Centrex	Retail Centrex
• Resale ISDN	Retail ISDN
• LNP (Standalone)	Retail Residence and Business (POTS)
• INP (Standalone)	Retail Residence and Business (POTS)
• 2W Analog Loop Design	Retail Residence and Business Dispatch
• 2W Analog Loop Non-Design	Retail Residence and Business - (POTS Excluding Switch-Based Orders)
• 2W Analog Loop with LNP Design	Retail Residence and Business Dispatch
• 2W Analog Loop with LNP Non-Design	Retail Residence and Business - (POTS Excluding Switch-Based Orders)
• 2W Analog Loop with INP Design	Retail Residence and Business Dispatch
• 2W Analog Loop with INP Non-Design	Retail Residence and Business (POTS - Excluding Switch-Based Orders)
• UNE Digital Loop < DS1	Retail Digital Loop < DS1
• UNE Digital Loop >= DS1	Retail Digital Loop >= DS1
• UNE Loop + Port Combinations	Retail Residence and Business
- Dispatch In	- Dispatch In
- Switch-Based	- Switch-Based
• UNE Switch Ports	Retail Residence and Business (POTS)
• UNE Combo Other	Retail Residence, Business and Design Dispatch (Including Dispatch Out and Dispatch In)
• UNE xDSL (HDSL, ADSL and UCL)	ADSL provided to Retail
• UNE ISDN (Includes UDC)	Retail ISDN BRI
• UNE Line Sharing	ADSL Provided to Retail
• Local Transport (Unbundled Interoffice Transport)	Retail DS1/DS3 Interoffice
• Local Interconnection Trunks	Parity with Retail
• UNE Line Splitting	ADSL Provided to Retail
• UNE Other Non-Design	Retail Residence and Business
• UNE Other Design	Retail Design
• EELs	Retail DS1/DS3

P-10: Total Service Order Cycle Time (TSOCT)
(Deleted)

P-11: Service Order Accuracy

Definition

The "service order accuracy" measurement measures the accuracy and completeness of BellSouth service orders by comparing what was ordered and what was completed.

Exclusions

- Canceled Service Orders
- Order Activities of BellSouth or the CLEC associated with internal or administrative use of local services (Record Orders, Listing Orders, Test Orders, etc.)
- D & F orders

Business Rules

A statistically valid sample of service orders, completed during a monthly reporting period, is compared to the original account profile and the order that the CLEC sent to BellSouth. An order is "completed without error" if all service attributes and account detail changes (as determined by comparing the original order) completely and accurately reflect the activity specified on the original order and any supplemental CLEC order. For both small and large sample sizes, when a Service Request cannot be matched with a corresponding Service Order, it will not be counted. For small sample sizes an effort will be made to replace the service request.

Service Order Accuracy Sampling Process: A list of all orders completed in the report month is generated. The orders are then listed by the disaggregations specified in the SQM. For each disaggregation, the quantity of completed orders and the error rate for each disaggregation from the previous month are entered into a "Stratified Random Sampling for Proportions" formula. This formula determines the number of orders that are to be reviewed for each disaggregation. Once the sample size for each disaggregation is determined, the specified quantity of orders for each disaggregation are pulled for review.

Calculation

Percent Service Order Accuracy = (a / b) X 100

- a = Orders Completed without Error
- b = Orders Completed in Reporting Period

Report Structure

- CLEC Aggregate
- Reported in categories of <10 line/circuits; >= 10 line/circuits
- Dispatch/Non-Dispatch

Data Retained

Relating to CLEC Experience

- Report Month
- CLEC Order Number and PON
- Local Service Request (LSR)
- Order Submission Date
- Committed Due Date
- Service Type
- Standard Order Activity

Relating to BellSouth Performance

- No BellSouth Analog Exist

SQM Disaggregation - Analog/Benchmark

SQM Level of Disaggregation	SQM Analog/Benchmark
• Resale Residence	95% Accurate
• Resale Business	
• Resale Design (Specials)	
• UNE Specials (Design)	
• UNE (Non-Design)	
• Local Interconnection Trunks	

SEEM Measure

SEEM	Tier I	Tier II
Yes		X

SEEM Disaggregation - Analog/Benchmark

SEEM Disaggregation	SEEM Analog/Benchmark
• Resale	95%
• UNE	95%
• UNE-P	95%

Note: This measure to be replaced when P-11A is implemented.

***Note*: This measure becomes effective with September 2003 service orders. The Service Order Accuracy measure as defined in the previous SQM will be effective prior to that time.**

P-11A: Service Order Accuracy

Definition

The Service Order Accuracy measurement measures the accuracy and completeness of CLEC requests for service by comparing the CLEC Local Service Request (LSR) to the completed service order after provisioning has been completed. Only electronically submitted LSRs that require manual handling by a BellSouth service representative in the LCSC are measured.

Exclusions

- Canceled Service Orders
- Order Activities of BellSouth or the CLEC associated with internal or administrative use of local services (Record Orders, Listing Orders, orders using test OCNs, which may be coded C, N, R or T etc.)
- Disconnect Orders
- CLEC LSRs submitted manually (FAX or Courier)
- CLEC LSRs submitted electronically that are not manually handled by BellSouth (Flow Through)

Business Rules

Only CLEC LSRs submitted electronically that fall out of the electronic system for manual processing (partially mechanized) by a BellSouth representative and the resulting service orders are selected for this measure. The CLEC requested services on the LSR are compared to the completed service order using the CLEC-Affecting Service Attributes shown below.

Selected CLEC-Affecting Service Attributes

The BellSouth Local Service Request (LSR) fields identified below will be used, as applicable, for this Service Order Accuracy review process.

BellSouth LSR Fields

The fields listed below would only be captured as a miss when they are service affecting. For the purpose of the Service Order Accuracy measure, if any of the fields listed below are populated on the LSR and do not match the corresponding field on the Service Order, but this mismatch does not affect the correct provisioning of the Service Order, the field is not considered to be service affecting and therefore will not be included as a miss in this measure. An example would be LCSC/System workarounds, which will be identified in a document posted on the Interconnection website. CLECs may discuss any of the posted LCSC/System Workarounds during the regular PMAP notification calls.

- Company Code
- PON
- Billed Telephone Number
- Telephone Number
- Ported Telephone Number
- Circuit ID
- PIC
- LPIC
- Directory Listing
  - Directory Delivery Address
  - Listing Activity
  - Alphanumeric Listing Identifier Code
  - Record Type

  - Listing Type
  - Listed Telephone Number
  - Listed Name, Last Name
  - Listed Name, First Name
  - Address Indicator
  - Listed Address House Number
  - Listed Address House Number Suffix
  - Listed Address Street Directional
  - Listed Address Street Name
  - Listed Address Thoroughfare
  - Listed Address Street Suffix
  - Listed Address Locality
  - Yellow Pages Heading
- Features
  - Feature Activity
  - Feature Codes
  - Feature Detail*
- Hunting
  - Hunt Group Activity
  - Hunt Group Identifier
  - Telephone Number Identifier
  - Hunt Type Code
  - Hunt Line Activity
  - Hunting Sequence
  - Number Type
  - Hunting Telephone Number
- E911 Listing
  - Service Address House Number
  - Service Address House Number Suffix
  - Service Address Street Directional
  - Service Address Street Name
  - Service Address Thoroughfare
  - Service Address Street Suffix
  - Service Address Descriptive Location
- EATN
- ATN
- APOT
- CFA
- NC
- NCI

* Feature Detail will only be checked for the following USOCs: GCE, GCJ, CREX4, GCJRC, GCZ, DRS, VMSAX, S98VM, S98AF, SMBBX, MBBRX. USOCs and FIDs for Feature Detail will be posted on the Interconnection Website. Any changes to the USOCs and FIDs required to continue checking the identical service will be updated on this Website.

Calculation

Percent Service Order Accuracy = (a / b) X 100

- a = Applicable Orders Completed without Error
- b = Applicable Orders Completed in Reporting Period

Report Structure

- CLEC Specific
- CLEC Aggregate
- Geographic Scope
  - Region

Data Retained

Relating to CLEC Experience

- Report Month
- CLEC Order Number (PON)
- Local Service Request (LSR) Number
- BellSouth Service Order Number
- BellSouth Service Order Completion Date
- Service Type (Resale, UNE, UNE-P)
- Standard Order Activity

Relating to BellSouth Performance

- No BellSouth Analog Exists

SQM Disaggregation – Analog/Benchmark

SQM Level of Disaggregation	SQM Analog/Benchmark
Resale	95% Accurate
UNE	95% Accurate
UNE-P	95% Accurate

SEEM Measure

SEEM	Tier I	Tier II	Tier III
Yes	X	X	

SEEM Disaggregation - Analog/Benchmark

SEEM Disaggregation	SEEM Analog/Benchmark
Resale	95% Accurate
UNE	95% Accurate
UNE-P	95% Accurate

P-12: LNP-Average Disconnect Timeliness Interval & Disconnect Timeliness Interval Distribution

(Deleted)

P-13B: LNP - Percent Out of Service < 60 Minutes

Definition

The Number of LNP related conversions where the time required to facilitate the activation of the port in BellSouth's network is less than 60 minutes, expressed as a percentage of total number of activations that took place.

Exclusions

- CLEC-caused errors
- NPAC caused errors unless caused by BellSouth
- Standalone LNP orders with more than 500 number activations

Business Rules

The Start time is the Receipt of the NPAC broadcast activation message in BellSouth's LSMS. The End time is when the Provisioning event is successfully completed in BellSouth's network as reflected in BellSouth's LSMS. Count the number of activations that took place in less than 60 minutes.

Calculation

Percent Out of Service < 60 Minutes = (a / b) X 100

- a = Number of activations provisioned in less than 60 minutes
- b = Total LNP activations

Report Structure

- CLEC Specific
- CLEC Aggregate
- Geographic Scope
  - State
  - Region

Data Retained

Relating to CLEC Experience

- Order Number
- Telephone Number/Circuit Number
- Committed Due Date
- Date/Time of Recent Change Notice

Relating to BellSouth Performance

- SOCS Completion Date and Time Stamp
- CLEC Activate Message

SQM Disaggregation – Analog/Benchmark

SQM Level of Disaggregation	SQM Analog/Benchmark
• LNP	> = 96.5%

SEEM Measure

SEEM	Tier I	Tier II	Tier III
Yes	X	X	

SEEM Disaggregation - Analog/Benchmark

SEEM Disaggregation	SEEM Analog/Benchmark
• LNP	> = 96.5%

P-13C: LNP – Percentage of Time BellSouth Applies the 10-Digit Trigger Prior to the LNP Order Due Date

Definition

Percentage of time BellSouth applies 10-digit trigger for LNP TNs prior to the due date.

Exclusions

Excludes CLEC or Customer caused misses or delays.

Business Rules

Obtain number of LNP TNs where the 10-digit trigger was applicable prior to due date, and the total number of LNP TNs where the 10-digit trigger was applicable.

Calculation

Percentage of 10-Digit Applications = (a / b) X 100

- a = Count of LNP TNs for which 10-digit trigger was applied prior to due date
- b = Total LNP TNs for which 10-digit triggers were applicable

Report Structure

- CLEC Specific
- CLEC Aggregate
- Geographic Scope
  - State
  - Region

Data Retained

Relating to CLEC Experience

- Order Number
- Telephone Number/Circuit Number
- Committed Due Date
- Date/Time of Recent Change Notice

Relating to BellSouth Performance

- SOCS Completion Date and Time Stamp
- CLEC Activate Message

SQM Disaggregation - Analog/Benchmark

SQM Level of Disaggregation	SQM Analog/Benchmark
• LNP (Standalone)	Benchmark: 95%

SEEM Measure

SEEM	Tier I	Tier II
Yes	X	X

SEEM Disaggregation	SEEM Analog/Benchmark
• LNP (Standalone)	Benchmark: 95%

P-13D: LNP - Average Disconnect Timeliness Interval (Non-Trigger)

Definition

Disconnect Timeliness is defined as the interval between the time ESI Number Manager receives the valid 'Number Ported' message from NPAC (signifying the CLEC 'Activate') until the time the Disconnect is completed in the Central Office switch. This interval effectively measures BellSouth responsiveness by isolating it from impacts that are caused by CLEC related activities.

Exclusions

- Canceled Service Orders
- Order Activities of BellSouth or the CLEC associated with internal or administrative use of local services (Record Orders, Listing Orders, Test Orders, etc.) where identifiable. Order types may be C, N, R, or T.
- CLEC-caused errors
- NPAC-caused errors, unless caused by BellSouth
- Incomplete Ports where only a subset of activate messages have been received compared with the LSR and create messages.
- Orders which are candidates for 10 digit triggers, except those that did not receive 10 digit triggers prior to the port out date.
- LSRs where the CLEC did not contact BST within 30 minutes after Activate Message.

Business Rules

The Disconnect Timeliness interval is determined for each telephone number ported associated with a disconnect service order processed on an LSR during the reporting period. The Disconnect Timeliness interval is the elapsed time from when BellSouth receives a valid 'Number Ported' message in ESI Number Manager (signifying the CLEC 'Activate') for each telephone number ported until each number on the service order is disconnected in the Central Office switch. Elapsed time for each ported number is accumulated for each reporting dimension. The accumulated time for each reporting dimension is then divided by the total number of selected telephone numbers disconnected in the reporting period. Non-Business hours will be excluded from the duration calculation for unscheduled after hours LNP ports. This will yield a benchmark equivalent to by 12:00 noon the next business day thus, keeping the benchmark at 4 hours.

Calculation

Disconnect Timeliness Interval = (a - b)

- a = Completion Date and Time in Central Office switch for each number on disconnect order
- b = Valid 'Number Ported' message received date and time

Average Disconnect Timeliness Interval = (c / d)

- c = Sum of all Disconnect Timeliness Intervals
- d = Total Number of disconnected numbers completed in reporting period

Report Structure

- CLEC Specific
- CLEC Aggregate
- Geographic Scope
  - State
  - Region

Data Retained

Relating to CLEC Experience

- Order Number
- Telephone Number/Circuit Number
- Committed Due Date
- Receipt Date/Time (ESI Number Manager)
- Date/Time of Recent Change Notice

Relating to BellSouth Performance

- SOCS Completion Date and Time Stamp
- CLEC Activate Message

SQM Disaggregation – Analog/Benchmark

SQM Level of Disaggregation	SQM Analog/Benchmark
LNP (Normal Working Hours and Approved After Hours)	95% < = 4 Hours
LNP (Unscheduled After Hours Ports)	95% <= 4 Hours (excluding non-business hours)

SEEM Measure

SEEM	Tier I	Tier II
Yes	X	X

SEEM Disaggregation - Analog/Benchmark

- LNP (Normal Working Hours and Approved After Hours)..... 95% < = 4 Hours
- LNP (Unscheduled After Hours Ports)..... 95% <= 4 Hours (excluding non-business hours)

Section 4: Maintenance & Repair

M&R-1: Missed Repair Appointments

Definition

The percent of customer trouble reports not cleared by the committed date and time.

Exclusions

- Trouble tickets canceled at the CLEC request
- BellSouth trouble reports associated with internal or administrative service
- Customer Provided Equipment (CPE) troubles or CLEC Equipment Trouble

Business Rules

The negotiated commitment date and time is established when the repair report is received. The cleared time is the date and time that BellSouth personnel clear the trouble and closes the trouble report in his/her Computer Access Terminal (CAT) or workstation. If this is after the Commitment time, the report is flagged as a "Missed Commitment" or a missed repair appointment. When the data for this measure is collected for BellSouth and a CLEC, it can be used to compare the percentage of the time repair appointments are missed due to BellSouth reasons. (No access reports are not part of this measure because they are not a missed appointment.)

> **Note**: Appointment intervals vary with force availability in the POTS environment. Specials and Trunk intervals are standard interval appointments of no greater than 24 hours. Standalone LNP historical data is not available in the maintenance systems (LMOS or WFA).

Calculation

Percentage of Missed Repair Appointments = (a / b) X 100

- a = Count of Customer Troubles Not Cleared by the Quoted Commitment Date and Time
- b = Total Customer Trouble reports closed in Reporting Period

Report Structure

- Dispatch/Non-Dispatch
- CLEC Specific
- CLEC Aggregate
- BellSouth Aggregate
- Geographic Scope
  - State
  - Region

Data Retained

Relating to CLEC Experience

- Report Month
- CLEC Company Name
- Submission Date and Time (TICKET_ID)
- Completion Date (CMPLTN_DT)
- Service Type (CLASS_SVC_DESC)
- Disposition and Cause (CAUSE_CD & CAUSE_DESC)

Note: Code in parentheses is the corresponding header found in the raw data file.

Relating to BellSouth Performance

- Report Month
- BellSouth Company Code
- Submission Date and Time
- Completion Date
- Service Type
- Disposition and Cause (Non-Design /Non-Special Only)
- Trouble Code (Design and Trunking Services)

SQM Disaggregation - Analog/Benchmark

SQM Level of Disaggregation	SQM Analog/Benchmark
Resale Residence	Retail Residence
Resale Business	Retail Business
Resale Design	Retail Design
Resale PBX	Retail PBX
Resale Centrex	Retail Centrex
Resale ISDN	Retail ISDN
2W Analog Loop Design	Retail Residence & Business Dispatch
2W Analog Loop Non – Design	Retail Residence & Business (POTS) (Exclusion of Switch-based feature troubles)
UNE Digital Loop < DS1	Retail Digital Loop < DS1
UNE Digital Loop >= DS1	Retail Digital Loop >= DS1
UNE Loop + Port Combinations	Retail Residence and Business
UNE Switch ports	Retail Residence and Business (POTS)
UNE Combo Other	Retail Residence, Business and Design Dispatch
UNE xDSL (HDSL, ADSL and UCL)	ADSL Provided to Retail
UNE ISDN	Retail ISDN – BRI
UNE Line Sharing	ADSL provided to Retail
UNE Other Design	Retail Design
UNE Other Non-Design	Retail Residence and Business
Local Interconnection Trunks	Parity with Retail
Local Transport (Unbundled Interoffice Transport)	Retail DS1/DS3 Interoffice

SEEM Measure

SEEM	Tier I	Tier II
Yes	X	X

SEEM Disaggregation - Analog/Benchmark

SEEM Disaggregation	SEEM Analog/Benchmark
• Resale Residence	Retail Residence
• Resale Business	Retail Business
• Resale Design	Retail Design
• Resale PBX	Retail PBX
• Resale Centrex	Retail Centrex
• Resale ISDN	Retail ISDN
• 2W Analog Loop Design	Retail Residence and Business Dispatch
• 2W Analog Loop Non – Design	Retail Residence and Business (POTS) (Exclusion of Switch-based feature troubles)
• UNE Digital Loop < DS1	Retail Digital Loop < DS1
• UNE Digital Loop >= DS1	Retail Digital Loop >= DS1
• UNE Loop + Port Combinations	Retail Residence & Business
• UNE Switch ports	Retail Residence & Business (POTS)
• UNE Combo Other	Retail Residence, Business and Design Dispatch
• UNE xDSL (HDSL, ADSL and UCL)	ADSL provided to Retail
• UNE ISDN	Retail ISDN – BRI
• UNE Line Sharing	ADSL Provided to Retail
• UNE Other Design	Retail Design
• UNE Other Non-Design	Retail Residence and Business
• Local Transport (Unbundled Interoffice Transport)	Retail DS1/DS3 Interoffice
• Local Interconnection Trunks	Parity with Retail

M&R-2: Customer Trouble Report Rate

Definition

Initial and repeated customer direct or referred customer troubles reported within a calendar month per 100 lines/circuits in service.

Exclusions

- Trouble tickets canceled at the CLEC request.
- BellSouth trouble reports associated with internal or administrative service.
- Customer Provided Equipment (CPE) troubles or CLEC Equipment Trouble.

Business Rules

Customer Trouble Report Rate is computed by accumulating the number of maintenance initial and repeated trouble reports during the reporting period. The resulting number of trouble reports are divided by the total "number of service" lines, ports or combination that exist for the CLECs and BellSouth respectively at the end of the report month.

Calculation

Customer Trouble Report Rate = (a / b) X 100

- a = Count of Initial and Repeated Customer Trouble Reports closed in the Current Period
- b = Number of Service Access Lines in service at End of the Report Period

Report Structure

- CLEC Specific
- CLEC Aggregate
- BellSouth Aggregate
- Dispatch/Non-Dispatch
- Geographic Scope
  - State
  - Region

Data Retained

Relating to CLEC Experience

- Report Month
- CLEC Company Name
- Ticket Submission Date and Time (TICKET_ID)
- Ticket Completion Date (CMPLTN_DT)
- Service Type (CLASS_SVC_DESC)
- Disposition and Cause (CAUSE_CD & CAUSE_DESC)
- # Service Access Lines in Service at the end of period

Note: Code in parentheses is the corresponding header found in the raw data file.

Relating to BellSouth Performance

- Report Month
- BellSouth Company Code
- Ticket Submission Date and Time
- Ticket Completion Date
- Service Type
- Disposition and Cause (Non-Design /Non-Special Only)
- Trouble Code (Design and Trunking Services)
- # Service Access Lines in Service at the end of period

SQM Disaggregation - Analog/Benchmark

SQM Level of Disaggregation	SQM Analog/Benchmark
Resale Residence	Retail Residence
Resale Business	Retail Business
Resale Design	Retail Design
Resale PBX	Retail PBX
Resale Centrex	Retail Centrex
Resale ISDN	Retail ISDN
2W Analog Loop Design	Retail Residence and Business Dispatch
2W Analog Loop Non – Design	Retail Residence and Business (POTS) (Exclusion of Switch-based feature troubles)
UNE Digital Loop < DS1	Retail Digital Loop < DS1
UNE Digital Loop >= DS1	Retail Digital Loop >= DS1
UNE Loop + Port Combinations	Retail Residence and Business
UNE Switch Ports	Retail Residence and Business (POTS)
UNE Combo Other	Retail Residence, Business and Design Dispatch
UNE xDSL (HDSL, ADSL and UCL)	ADSL Provided to Retail
UNE ISDN	Retail ISDN – BRI
UNE Line Sharing	ADSL Provided to Retail
UNE Other Design	Retail Design
UNE Other Non-Design	Retail Residence and Business
Local Interconnection Trunks	Parity with Retail
Local Transport (Unbundled Interoffice Transport)	Retail DS1/DS3 Interoffice

SEEM Measure

SEEM	Tier I	Tier II
Yes	X	X

SEEM Disaggregation - Analog/Benchmark

SEEM Disaggregation	SEEM Analog/Benchmark
Resale Residence	Retail Residence
Resale Business	Retail Business
Resale Design	Retail Design
Resale PBX	Retail PBX
Resale Centrex	Retail Centrex
Resale ISDN	Retail ISDN
2W Analog Loop Design	Retail Residence and Business Dispatch
2W Analog Loop Non – Design	Retail Residence and Business (POTS) (Exclusion of Switch-based feature troubles)
UNE Digital Loop < DS1	Retail Digital Loop < DS1
UNE Digital Loop > DS1	Retail Digital Loop >= DS1
UNE Loop + Port Combinations	Retail Residence and Business
UNE Switch Ports	Retail Residence and Business (POTS)
UNE Combo Other	Retail Residence, Business and Design Dispatch

- UNE xDSL (HDSL, ADSL and UCL) ..... ADSL Provided to Retail
- UNE ISDN ..... Retail ISDN – BRI
- UNE Line Sharing ..... ADSL Provided to Retail
- UNE Other Design..... Retail Design
- UNE Other Non-Design ..... Retail Residence and Business
- Local Transport (Unbundled Interoffice Transport) ..... Retail DS1/DS3 Interoffice
- Local Interconnection Trunks..... Parity with Retail

M&R-3: Maintenance Average Duration

Definition

The Average duration of Customer Trouble Reports from the receipt of the Customer Trouble Report to the time the trouble report is cleared.

Exclusions

- Trouble tickets canceled at the CLEC request.
- BellSouth trouble reports associated with internal or administrative service.
- Customer Provided Equipment (CPE) troubles or CLEC Equipment Trouble.

Business Rules

For Average Duration the clock starts on the date and time of the receipt of the correct report information, i.e. correct telephone number, correct circuit identification, trouble description, etc. for the repair request. The clock stops on the date and time the service is restored and the BellSouth or CLEC customer is notified (when the technician completes the trouble ticket on his/her CAT or work systems).

Calculation

Maintenance Duration = (a - b)

- a = Date and Time of Service Restoration
- b = Date and Time Customer Trouble Ticket was Opened

Average Maintenance Duration = (c / d)

- c = Total of all maintenance durations in the reporting period
- d = Total Closed Customer Troubles in the reporting period

Report Structure

- Dispatch/Non-Dispatch
- CLEC Specific
- CLEC Aggregate
- BellSouth Aggregate
- Geographic Scope
  - State
  - Region

Data Retained

Relating to CLEC Experience

- Report Month
- Total Tickets (LINE_NBR)
- CLEC Company Name
- Ticket Submission Date and Time (TICKET_ID)
- Ticket Completion Date (CMPLTN_DT)
- Service Type (CLASS_SVC_DESC)
- Disposition and Cause (CAUSE_CD & CAUSE_DESC)

Note: Code in parentheses is the corresponding header found in the raw data file.

Relating to BellSouth Performance

- Report Month
- Total Tickets
- BellSouth Company Code
- Ticket Submission Date
- Ticket Submission Time
- Ticket Completion Date
- Ticket Completion Time
- Total Duration Time
- Service Type
- Disposition and Cause (Non-Design/Non-Special Only)
- Trouble Code (Design and Trunking Services)

SQM Disaggregation - Analog/Benchmark

SQM Level of Disaggregation	SQM Analog/Benchmark
Resale Residence	Retail Residence
Resale Business	Retail Business
Resale Design	Retail Design
Resale PBX	Retail PBX
Resale Centrex	Retail Centrex
Resale ISDN	Retail ISDN
2W Analog Loop Design	Retail Residence and Business Dispatch
2W Analog Loop Non – Design	Retail Residence and Business (POTS) (Exclusion of Switch-based feature troubles)
UNE Digital Loop < DS1	Retail Digital Loop < DS1
UNE Digital Loop >= DS1	Retail Digital Loop >= DS1
UNE Loop + Port Combinations	Retail Residence and Business
UNE Switch ports	Retail Residence and Business (POTS)
UNE Combo Other	Retail Residence, Business & Design Dispatch
UNE xDSL (HDSL, ADSL and UCL)	ADSL Provided to Retail
UNE ISDN	Retail ISDN – BRI
UNE Line Sharing	ADSL Provided to Retail
UNE Other Design	Retail Design
UNE Other Non-Design	Retail Residence and Business
Local Transport (Unbundled Interoffice Transport)	Retail DS1/DS3 Interoffice
Local Interconnection Trunks	Parity with Retail

SEEM Measure

SEEM	Tier I	Tier II
Yes	X	X

SEEM Disaggregation - Analog/Benchmark

SEEM Disaggregation	SEEM Analog/Benchmark
Resale Residence	Retail Residence
Resale Business	Retail Business
Resale Design	Retail Design
Resale PBX	Retail PBX
Resale Centrex	Retail Centrex
Resale ISDN	Retail ISDN
2W Analog Loop Design	Retail Residence and Business Dispatch
2W Analog Loop Non – Design	Retail Residence and Business (POTS) (Exclusion of Switch-based feature troubles)
UNE Digital Loop < DS1	Retail Digital Loop < DS1

- UNE Digital Loop >= DS1 ..... Retail Digital Loop >= DS1
- UNE Loop + Port Combinations ..... Retail Residence and Business
- UNE Switch ports ..... Retail Residence and Business (POTS)
- UNE Combo Other ..... Retail Residence, Business and Design Dispatch
- UNE xDSL (HDSL, ADSL and UCL) ..... ADSL Provided to Retail
- UNE ISDN ..... Retail ISDN – BRI
- UNE Line Sharing ..... ADSL Provided to Retail
- UNE Other Design ..... Retail Design
- UNE Other Non-Design ..... Retail Residence and Business
- Local Transport (Unbundled Interoffice Transport) ..... Retail DS1/DS3 Interoffice
- Local Interconnection Trunks ..... Parity with Retail

M&R-4: Percent Repeat Troubles within 30 Days

Definition

Percent Customer Repeat Troubles within 30 Days measures the percent of customer troubles, during the current reporting period, that had at least one prior trouble ticket on the same line/circuit, anytime in the proceeding 30 calendar days from the receipt of the current trouble report.

Exclusions

- Trouble tickets canceled at the CLEC request.
- BellSouth trouble reports associated with internal or administrative service.
- Customer Provided Equipment (CPE) troubles or CLEC Equipment Trouble.

Business Rules

This measure includes Customer trouble reports on the same line/circuit, received within 30 days of an original Customer trouble report, using the 'cleared date' of the first trouble and the 'received date' of the next trouble.

Calculation

Percent Repeat Customer Troubles within 30 Days = (a / b) X 100

- a = Count of Customer Troubles using the 'received date' where more than one trouble report was logged for the same service line/circuit, within a continuous 30 days
- b = Count of Total Customer Trouble Reports using the 'cleared date', in the Reporting Period

Report Structure

- Dispatch/Non-Dispatch
- CLEC Specific
- CLEC Aggregate
- BellSouth Aggregate
- Geographic Scope
  - State
  - Region

Data Retained

Relating to CLEC Experience

- Report Month
- Total Tickets (LINE_NBR)
- CLEC Company Name
- Ticket Submission Date and Time (TICKET_ID)
- Ticket Completion Date (CMPLTN_DT)
- Total and Percent Repeat Customer Trouble Reports within 30 Days (TOT_REPEAT)
- Service Type
- Disposition and Cause (CAUSE_CD & CAUSE_DESC)

Note: Code in parentheses is the corresponding header found in the raw data file.

Relating to BellSouth Performance

- Report Month

- Total Tickets
- BellSouth Company Code
- Ticket Submission Date
- Ticket Submission Time
- Ticket Completion Date
- Ticket Completion Time
- Total and Percent Repeat Customer Trouble Reports within 30 Days
- Service Type
- Disposition and Cause (Non-Design /Non-Special Only)
- Trouble Code (Design and Trunking Services)

SQM Disaggregation - Analog/Benchmark

SQM Level of Disaggregation	SQM Analog/Benchmark
Resale Residence	Retail Residence
Resale Business	Retail Business
Resale Design	Retail Design
Resale PBX	Retail PBX
Resale Centrex	Retail Centrex
Resale ISDN	Retail ISDN
2W Analog Loop Design	Retail Residence and Business Dispatch
2W Analog Loop Non – Design	Retail Residence and Business (POTS) (Exclusion of Switch-based feature troubles)
UNE Digital Loop < DS1	Retail Digital Loop < DS1
UNE Digital Loop >= DS1	Retail Digital Loop >= DS1
UNE Loop + Port Combinations	Retail Residence and Business
UNE Switch ports	Retail Residence and Business (POTS)
UNE Combo Other	Retail Residence, Business and Design Dispatch
UNE xDSL (HDSL, ADSL and UCL)	ADSL Provided to Retail
UNE ISDN	Retail ISDN – BRI
UNE Line Sharing	ADSL Provided to Retail
UNE Other Design	Retail Design
UNE Other Non-Design	Retail Residence and Business
Local Transport (Unbundled Interoffice Transport)	Retail DS1/DS3 Interoffice
Local Interconnection Trunks	Parity with Retail

SEEM Measure

SEEM	Tier I	Tier II
Yes	X	X

SEEM Disaggregation - Analog/Benchmark

SEEM Disaggregation	SEEM Analog/Benchmark
Resale Residence	Retail Residence
Resale Business	Retail Business
Resale Design	Retail Design
Resale PBX	Retail PBX
Resale Centrex	Retail Centrex
Resale ISDN	Retail ISDN
2W Analog Loop Design	Retail Residence and Business Dispatch
2W Analog Loop Non – Design	Retail Residence and Business (POTS) (Exclusion of Switch-based feature troubles)
UNE Digital Loop < DS1	Retail Digital Loop < DS1
UNE Digital Loop >= DS1	Retail Digital Loop >= DS1
UNE Loop + Port Combinations	Retail Residence and Business
UNE Switch ports	Retail Residence and Business (POTS)
UNE Combo Other	Retail Residence, Business and Design Dispatch

- UNE xDSL (HDSL, ADSL and UCL) ..... ADSL Provided to Retail
- UNE ISDN ..... Retail ISDN – BRI
- UNE Line Sharing ..... ADSL Provided to Retail
- UNE Other Design..... Retail Design
- UNE Other Non-Design ..... Retail Residence and Business
- Local Transport (Unbundled Interoffice Transport) ..... Retail DS1/DS3 Interoffice
- Local Interconnection Trunks..... Parity with Retail

M&R-5: Out of Service (OOS) > 24 Hours

Definition

For Out of Service Customer Troubles (no dial tone, cannot be called or cannot call out) the percentage of Total OOS Customer Troubles cleared in excess of 24 hours. (All design services are considered to be out of service).

Exclusions

- Trouble Reports canceled at the CLEC request
- BellSouth Trouble Reports associated with administrative service
- Customer Provided Equipment (CPE) Troubles or CLEC Equipment Troubles.

Business Rules

Customer Trouble reports that are out of service and cleared in excess of 24 hours. The clock begins when the customer trouble report is created in LMOS/WFA and the customer trouble is counted if the elapsed time exceeds 24 hours.

Calculation

Out of Service (OOS) > 24 hours = (a / b) X 100

- a = Total Cleared Customer Troubles OOS > 24 Hours
- b = Total OOS Customer Troubles in Reporting Period

Report Structure

- Dispatch/Non-Dispatch
- CLEC Specific
- BellSouth Aggregate
- CLEC Aggregate
- Geographic Scope
  - State
  - Region

Data Retained

Relating to CLEC Experience

- Report Month
- Total Tickets
- CLEC Company Name
- Ticket Submission Date and Time (TICKET_ID)
- Ticket Completion Date (CMPLTN_DT
- Percentage of Customer Troubles out of Service > 24 Hours (OOS>24_FLAG)
- Service type (CLASS_SVC_DESC)
- Disposition and Cause (CAUSE_CD & CAUSE-DESC)

Note: Code in parentheses is the corresponding header found in the raw data file.

Relating to BellSouth Performance

- Report Month
- Total Tickets
- BellSouth Company Code
- Ticket Submission Date
- Ticket Submission time
- Ticket Completion Date
- Ticket Completion Time
- Percent of Customer Troubles out of Service > 24 Hours
- Service Type
- Disposition and Cause (Non-Design/Non-Special only)
- Trouble Code (Design and Trunking Services)

SQM Disaggregation - Analog/Benchmark

SQM Level of Disaggregation	SQM Analog/Benchmark
Resale Residence	Retail Residence
Resale Business	Retail Business
Resale Design	Retail Design
Resale PBX	Retail PBX
Resale Centrex	Retail Centrex
Resale ISDN	Retail ISDN
2W Analog Loop Design	Retail Residence and Business Dispatch
2W Analog Loop Non – Design	Retail Residence and Business (POTS) (Exclusion of Switch-based feature troubles)
UNE Digital Loop < DS1	Retail Digital Loop < DS1
UNE Digital Loop >= DS1	Retail Digital Loop >= DS1
UNE Loop + Port Combinations	Retail Residence and Business
UNE Switch ports	Retail Residence and Business (POTS)
UNE Combo Other	Retail Residence, Business and Design Dispatch
UNE xDSL (HDSL, ADSL and UCL)	ADSL provided to Retail
UNE ISDN	Retail ISDN – BRI
UNE Line Sharing	ADSL Provided to Retail
UNE Other Design	Retail Design
UNE Other Non-Design	Retail Residence and Business
Local Transport (Unbundled Interoffice Transport)	Retail DS1/DS3 Interoffice
Local Interconnection Trunks	Parity with Retail

SEEM Measure

SEEM	Tier I	Tier II
Yes	X	X

SEEM Disaggregation - Analog/Benchmark

SEEM Disaggregation	SEEM Analog/Benchmark
Resale Residence	Retail Residence
Resale Business	Retail Business
Resale Design	Retail Design
Resale PBX	Retail PBX
Resale Centrex	Retail Centrex
Resale ISDN	Retail ISDN
2W Analog Loop Design	Retail Residence and Business Dispatch
2W Analog Loop Non – Design	Retail Residence and Business (POTS) (Exclusion of Switch-based feature troubles)
UNE Digital Loop < DS1	Retail Digital Loop < DS1

- UNE Digital Loop >= DS1 ..... Retail Digital Loop >= DS1
- UNE Loop + Port Combinations ..... Retail Residence and Business
- UNE Switch Ports ..... Retail Residence and Business (POTS)
- UNE Combo Other ..... Retail Residence, Business and Design Dispatch
- UNE xDSL (HDSL, ADSL and UCL) ..... ADSL Provided to Retail
- UNE ISDN ..... Retail ISDN – BRI
- UNE Line Sharing ..... ADSL Provided to Retail
- UNE Other Design ..... Retail Design
- UNE Other Non-Design ..... Retail Residence and Business
- Local Transport (Unbundled Interoffice Transport) ..... Retail DS1/DS3 Interoffice
- Local Interconnection Trunks ..... Parity with Retail

M&R-6: Average Answer Time – Repair Centers

Definition

This report measures the average time a customer is in queue when calling a BellSouth Repair Center.

Exclusions

- Abandoned Calls

Business Rules

The clock starts when a CLEC Representative or BellSouth customer makes a choice on the Repair Center's menu and is put in queue for the next repair attendant. The clock stops when the repair attendant answers the call.

Note: The Total Column is a combined BellSouth Residence and Business number.

Calculation

Answer Time for BellSouth Repair Centers = (a - b)

- a = Time BellSouth Repair Attendant Answers Call
- b = Time of entry into queue after ACD Selection

Average Answer Time for BellSouth Repair Centers = (c / d)

- c = Sum of all Answer Times
- d = Total number of calls by reporting period

Report Structure

- CLEC Aggregate
- BellSouth Aggregate
- Geographic Scope
  - Region

Data Retained

Relating to CLEC Experience

- CLEC Average Answer Time

Relating to BellSouth Performance

- BellSouth Average Answer Time

SQM Disaggregation - Analog/Benchmark

SQM Level of Disaggregation

- Region. CLEC/BellSouth Service Centers and BellSouth Repair Centers are regional.

SQM Analog/Benchmark

- For CLEC, Average Answer Times in UNE Center and BRMC are comparable to the Average Answer Times in the BellSouth Repair Centers.

SEEM Measure

SEEM	Tier I	Tier II
No		

SEEM Disaggregation - Analog/Benchmark

SEEM Disaggregation	SEEM Analog/Benchmark
• Not Applicable	Not Applicable

M&R-7: Mean Time To Notify CLEC of Network Outages

Definition

BellSouth will inform the CLEC and appropriate BellSouth personnel of any Network outages (customer impacting).

Exclusions

None

Business Rules

The time it takes for the Network Management Center (NMC) to notify the CLEC and appropriate BellSouth personnel of a customer impacting network incident in equipment that may be utilized by the CLEC. When BellSouth becomes aware of a network incident, the CLEC and appropriate BellSouth personnel will be notified electronically. The notification time for each outage will be measured in minutes and divided by the number of outages for the reporting period. The CLECs will be notified the same way and at the same time as BellSouth personnel. These are broadcast messages. It is up to those receiving the message to determine if they have customers affected by the incident.

Calculation

Time to Notify = (a - b)

- a = Date and Time NMC Notified
- b = Date and Time NMC detected network incident

Mean Time to Notify = (c / d)

- c = Sum of all Times to Notify
- d = Count of all Network Incidents

Report Structure

- BellSouth Aggregate
- CLEC Aggregate
- CLEC Specific
- Geographic Scope
  - Region

Data Retained

Relating to CLEC Experience

- Report Month
- Major Network Events
- Date/Time of Incident
- Date/Time of Notification

Relating to BellSouth Performance

- Report Month
- Major Network Events
- Date/Time of Incident
- Date/Time of Notification

SQM Disaggregation - Analog/Benchmark

SQM Level of Disaggregation	SQM Analog/Benchmark
• BellSouth Aggregate	Parity with Retail
• CLEC Aggregate	Parity with Retail
• CLEC Specific	Parity with Retail

SEEM Measure

SEEM	Tier I	Tier II
No		

SEEM Disaggregation - Analog/Benchmark

SEEM Disaggregation	SEEM Analog/Benchmark
• Not Applicable	Not Applicable

Section 5: Billing

B-1: Invoice Accuracy

Definition

This measure provides the percentage of accuracy of the billing invoices rendered to CLECs during the current month.

Exclusions

- Adjustments not related to billing errors (e.g., credits for service outage, special promotion credits, adjustments to satisfy the customer)
- Test Accounts

Business Rules

The accuracy of billing invoices delivered by BellSouth to the CLEC must enable them to provide a degree of billing accuracy comparative to BellSouth bills rendered to retail customers of BellSouth. CLECs request adjustments on bills determined to be incorrect. The BellSouth Billing verification process includes manually analyzing a sample of local bills from each bill period. The bill verification process draws from a mix of different customer billing options and types of service. An end-to-end auditing process is performed for new products and services. Internal measurements and controls are maintained on all billing processes. The CLEC-specific raw data file (which is available on the PMAP web site) will contain the number of bills and adjustments for the reporting month. The number of bills and bill adjustments will be displayed by OCN and/or ACNA.

Calculation

Invoice Accuracy = [(a - b) / a] X 100

- a = Absolute Value of Total Billed Revenues during current month
- b = Absolute Value of Total Billing Related Adjustments during current month

Measure of Adjustments = [(c-d) / c] X 100

- c = Number of Bills in current month
- d = Number of Billing-related Adjustments in current month

Report Structure

- CLEC Specific
- CLEC Aggregate
- BellSouth Aggregate
- Geographic Scope
  - State
  - Region
- Number of Adjustments

Data Retained

Relating to CLEC Experience

- Report Month
- Invoice Type
  - UNE
  - Resale
  - Interconnection

- Total Billed Revenue
- Total Billing Related Adjustments
- Number of Bills
- Number of Adjustments

Relating to BellSouth Performance

- Report Month
- Retail Type
  - CRIS
  - CABS
- Total Billed Revenue
- Total Billing Related Adjustments

SQM Disaggregation - Analog/Benchmark

SQM Level of Disaggregation	SQM Analog/Benchmark
• Product/Invoice Type	Parity with BellSouth Retail Aggregate
- Resale	
- UNE	
- Interconnection	

SEEM Measure

SEEM	Tier I	Tier II
Yes	X	X

SEEM Disaggregation - Analog/Benchmark

SEEM Disaggregation	SEEM Analog/Benchmark
• Resale	Parity with Retail
• UNE	
• Interconnection	

B-2: Mean Time to Deliver Invoices

Definition

This report measures the mean interval for timeliness of billing invoices sent to CLECs in an agreed upon format. CRIS-based invoices are measured in business days, and CABS-based invoices in calendar days.

Exclusions

None

Business Rules

Bill Distribution is calculated as follows: CRIS BILLS-The number of workdays is reported for CRIS bills. This is calculated by counting the Bill Period date as the first workday. Weekends and holidays are excluded when counting workdays. J/N Bills are counted in the CRIS work day category for the purposes of the measurement since their billing account number (Q account) is provided from the CRIS system.

CABS BILLS-The number of calendar days is reported for CABS bills. This is calculated by counting the day following the Bill Period date as the first calendar day. Weekends and holidays are included when counting the calendar days.

Calculation

Invoice Timeliness = (a - b)

- a = Invoice Transmission Date
- b = Close Date of Scheduled Bill Cycle

Mean Time To Deliver Invoices = (c / d)

- c = Sum of all Invoice Timeliness intervals
- d = Count of Invoices Transmitted in Reporting Period

Report Structure

- CLEC Specific
- CLEC Aggregate
- BellSouth Aggregate
- Geographic Scope
  - State
  - Region

Data Retained

Relating to CLEC Experience

- Report Month
- Invoice Type
  - UNE
  - Resale
  - Interconnection
  - State
- Invoice Transmission Count
- Date of Scheduled Bill Close

Relating to BellSouth Performance

- Report Month
- Invoice Type
  - CRIS
  - CABS
- Invoice Transmission Count
- Date of Scheduled Bill Close

SQM Disaggregation - Analog/Benchmark

SQM Level of Disaggregation

Product/Invoice Type

- Resale
- UNE
- Interconnection
- State

SQM Analog/Benchmark

- CLEC Average Delivery Intervals for both CRIS and CABS Invoices are comparable to BellSouth Average delivery for both systems.

SEEM Measure

SEEM	Tier I	Tier II
Yes	X	X

SEEM Disaggregation - Analog/Benchmark

SEEM Disaggregation	SEEM Analog/Benchmark
CLEC State	Parity with Retail
- CRIS	
- CABS	
BST-State	

B-3: Usage Data Delivery Accuracy

Definition

This measurement captures the percentage of recorded usage that is delivered error free and in an acceptable format to the appropriate Competitive Local Exchange Carrier (CLEC). These percentages will provide the necessary data for use as a comparative measurement for BellSouth performance. This measurement captures Data Delivery Accuracy rather than the accuracy of the individual usage recording.

Exclusions

None

Business Rules

The accuracy of the data delivery of usage records delivered by BellSouth to the CLEC must enable them to provide a degree of accuracy comparative to BellSouth bills rendered to their retail customers. If errors are detected in the delivery process, they are investigated, evaluated and documented. Errors are corrected and the data retransmitted to the CLEC.

Calculation

Usage Data Delivery Accuracy (Packs) = (a - b) / a X 100 **(This calculation not ordered by the FPSC)**

- a = Total number of usage data packs sent during current month
- b = Total number of usage data packs requiring retransmission during current month

Usage Data Delivery Accuracy (Records) = (c - d) / c X 100

- c = Total number of usage records sent during current month
- d = Total number of usage records requiring retransmission during current month

Report Structure

- CLEC Aggregate
- BellSouth Aggregate
- Geographic Scope
  - Region

Data Retained

Relating to CLEC Experience

- Report Month
- Record Type
  - BellSouth Recorded
  - Non-BellSouth Recorded
- Number of Records
- Packs

Relating to BellSouth Performance

- Report Month
- Record Type
- Number of Records
- Packs

SQM Disaggregation - Analog/Benchmark

SQM Level of Disaggregation	SQM Analog/Benchmark
• Region	Parity With Retail

SEEM Measure

SEEM	Tier I	Tier II
Yes	X	X

SEEM Disaggregation - Analog/Benchmark

SEEM Disaggregation	SEEM Analog/Benchmark
• CLEC State (In Florida, SEEM is based on records)	Parity with Retail
• BellSouth Region	

B-4: Usage Data Delivery Completeness

Definition

This measurement provides percentage of complete and accurately recorded usage data (usage recorded by BellSouth and usage recorded by other companies and sent to BellSouth for billing) that is processed and transmitted to the CLEC within thirty (30) days of the message recording date. A parity measure is also provided showing completeness of BellSouth messages processed and transmitted via CMDS. BellSouth delivers its own retail usage from recording location to billing location via CMDS as well as delivering billing data to other companies. Timeliness, Completeness and Mean Time to Deliver Usage measures are reported on the same report.

Exclusions

None

Business Rules

The purpose of these measurements is to demonstrate the level of quality of usage data delivered to the appropriate CLEC. Method of delivery is at the option of the CLEC.

Calculation

Usage Data Delivery Completeness = (a / b) X 100

- a = Total number of Recorded usage records delivered during current month that are within thirty (30) days of the message recording date
- b = Total number of Recorded usage records delivered during the current month

Report Structure

- CLEC Specific
- CLEC Aggregate
- Region

Data Retained

Relating to CLEC Experience

- Report Month
- Record Type
  - BellSouth Recorded
  - Non-BellSouth Recorded

Relating to BellSouth Performance

- None

SQM Disaggregation - Analog/Benchmark

SQM Level of Disaggregation	SQM Analog/Benchmark
Region	>= 98% within 30 Calendar Days

SEEM Measure

SEEM	Tier I	Tier II
No		

SEEM Disaggregation - Analog/Benchmark

SEEM Disaggregation	SEEM Analog/Benchmark
• Not Applicable	Not Applicable

B-5: Usage Data Delivery Timeliness

Definition

This measurement provides a percentage of recorded usage data (usage recorded by BellSouth and usage recorded by other companies and sent to BellSouth for billing) that is delivered to the appropriate CLEC within six (6) calendar days from the receipt of the initial recording. A parity measure is also provided showing timeliness of BellSouth messages processed and transmitted via CMDS. Timeliness, Completeness and Mean Time to Deliver Usage measures are reported on the same report.

Exclusions

None

Business Rules

The purpose of this measurement is to demonstrate the level of timeliness for processing and transmission of usage data delivered to the appropriate CLEC. The usage data will be mechanically transmitted or mailed to the CLEC data processing center once daily. The Timeliness interval of usage recorded by other companies is measured from the date BellSouth receives the records to the date BellSouth distributes to the CLEC. Method of delivery is at the option of the CLEC

Calculation

Usage Data Delivery Timeliness Current month = (a / b) X 100

- a = Total number of usage records sent within six (6) calendar days from initial recording/receipt
- b = Total number of usage records sent

Report Structure

- CLEC Aggregate
- CLEC Specific
- Region

Data Retained

Relating to CLEC Experience

- Report Month
- Record Type
  - BellSouth Recorded
  - Non-BellSouth Recorded

Relating to BellSouth Performance

- None

SQM Level of Disaggregation - Analog/Benchmark

SQM Level of Disaggregation	SQM Analog/Benchmark
• Region	>= 95% Delivered within 6 Calendar Days

SEEM Measure

SEEM	Tier I	Tier II
No		

SEEM Disaggregation - Analog/Benchmark

SEEM Disaggregation	SEEM Analog/Benchmark
• Not Applicable	Not Applicable

B-6: Mean Time to Deliver Usage

Definition

This measurement provides the average time it takes to deliver Usage Records to a CLEC. A parity measure is also provided showing timeliness of BellSouth messages processed and transmitted via CMDS. Timeliness, Completeness and Mean Time to Deliver Usage measures are reported on the same report.

Exclusions

None

Business Rules

The purpose of this measure is to calculate the average number of days it takes BellSouth to deliver usage data to the appropriate CLEC. The calculation reflects the differences between the date the data is transmitted or mailed to the CLEC and the date the data is generated by Customer divided by the total record volume delivery.

Each delivery record is calculated as the time, in days, between when the customer generates the call and when BellSouth delivers the usage data to the CLEC. Each delivery record is categorized by the resulting number of days.

An estimated interval is calculated for each category by taking the total number of usage data records delivered for that period and multiplying it by the total number of days in that period. The mean (average) time to deliver the usage data is calculated by summing all estimated intervals and dividing by the total number of records delivered.

> **Note:** Any usage record falling in the 30+ day interval will be added using an average figure of 31.5 days.

Usage data is mechanically transmitted or mailed to the CLEC data processing center once daily. Method of delivery is at the option of the CLEC.

Calculation

Delivery Interval Record = (a - b)

- a = Date BellSouth delivers the usage data
- b = Date usage data is generated by the customer

Estimated Interval = (c X d)

- c = Number of records delivered in each category
- d = Number of days to deliver for the category

Mean Time to Deliver Usage = (e / f)

- e = Sum of all estimated intervals
- f = Total number of records delivered

Report Structure

- CLEC Aggregate
- CLEC Specific
- Region

Data Retained

Relating to CLEC Experience

- Report Month
- Record Type
  - BellSouth Recorded
  - Non-BellSouth Recorded

Relating to BellSouth Performance

- None

SQM Level of Disaggregation - Analog/Benchmark

SQM Level of Disaggregation	SQM Analog/Benchmark
• Region	<= 6 Days

SEEM Measure

SEEM	Tier I	Tier II
No		

SEEM Disaggregation - Analog/Benchmark

SEEM Disaggregation	SEEM Analog/Benchmark
• Not Applicable	Not Applicable

B-7: Recurring Charge Completeness

Definition

This measure captures percentage of fractional recurring charges appearing on the correct bill.

Exclusions

None

Business Rules

The effective date of the recurring charge must be within 30 days of the bill date for the charge to appear on the correct bill. The count of fractional recurring charges in the calculation refers to a sum of absolute total dollar values either billed on the correct bill or absolute value of total fractional recurring charges on the bill.

Calculation

Recurring Charge Completeness = (a / b) X 100

- a = Count of fractional recurring charges that are on the correct bill[1]
- b = Total count of fractional recurring charges that are on the bill

[1]Correct bill = next available bill

Report Structure

- CLEC Specific
- CLEC Aggregate
- BellSouth Aggregate

Data Retained

Relating to CLEC Experience

- Report Month
- Invoice Type
- Total Recurring Charges Billed
- Total Billed On Time

Relating to BellSouth Performance

- Report Month
- Retail Analog
- Total Recurring Charges Billed
- Total Billed On Time

SQM Level of Disaggregation - Analog/Benchmark

SQM Level of Disaggregation	SQM Analog/Benchmark
Product/Invoice Type	
• Resale	Parity
• UNE	Benchmark 90%
• Interconnection	Benchmark 90%

SEEM Measure

SEEM	Tier I	Tier II
No		

SEEM Disaggregation - Analog/Benchmark

SEEM Disaggregation	SEEM Analog/Benchmark
• Not Applicable	Not Applicable

B-8: Non-Recurring Charge Completeness

Definition

This measure captures percentage of non-recurring charges appearing on the correct bill.

Exclusions

None

Business Rules

The effective date of the non-recurring charge must be within 30 days of the bill date for the charge to appear on the correct bill. The count of non-recurring charges in the calculation refers to a sum of absolute total dollar values either billed on the correct bill or absolute value of total non-recurring charges on the bill.

Calculation

Non-Recurring Charge Completeness = (a / b) X 100

- a = Count of non-recurring charges that are on the correct bill[1]
- b = Total count of non-recurring charges that are on the bill

[1]Correct bill = next available bill

Report Structure

- CLEC Specific
- CLEC Aggregate
- BellSouth Aggregate
- Geographic Scope
  - State

Data Retained

Relating to CLEC Experience

- Report Month
- Invoice Type
- Total Non-Recurring Charges Billed
- Total Billed On Time

Relating to BellSouth Performance

- Report Month
- Retail Analog
- Total Non-Recurring Charges Billed
- Total Billed On Time

SQM Level of Disaggregation - Analog/Benchmark

SQM Level of Disaggregation	SQM Analog/Benchmark
Product/Invoice Type	
• Resale	Parity
• UNE	Benchmark 90%
• Interconnection	Benchmark 90%

SEEM Measure

SEEM	Tier I	Tier II
No		

SEEM Disaggregation - Analog/Benchmark

SEEM Disaggregation	SEEM Analog/Benchmark
• Not Applicable	Not Applicable

B-9: Percent Daily Usage Feed Errors Corrected in "X" Business Days

Definition

Measures the timely correction of Daily Usage Feed (DUF) errors in record information and Pack formats measured separately. Errors included (1) Pack Failure errors and (2) EMI content errors in records.

Exclusions

- Usage that cannot be corrected and resent or usage that the CLEC doesn't want Retransmitted.
- CLEC Problem/Issue/File Retransmission forms disputed by BellSouth SMEs that do not result in an EMI error.
- CLEC notification received by BellSouth > 10 business days from transmission date of errored messages or packs.

Business Rules

This measure will provide the % of errors corrected in "X" Business days.

Pack Failure errors are defined as a DUF header/trailer error containing one or more of the following conditions: Grand total records not equal to records in pack or sequence/invoice numbers for a from RAO is not sequential

EMI content errors are defined as those records with errors contained in the EMI detail records that cause a message to be unbillable by the CLEC

Only notification received via the CLEC Problem/Issue/File Retransmission form will be included in this measure. To locate the form, go to the PMAP web site (http://pmap.bellsouth.com/) and click the Documentation/Exhibits link, then select the "CLEC Problem/Issue/File Retransmission form."

When circumstances arise for multiple content errors it is not necessary for the form to be filled out in its entirety, the CLECs agree to provide sufficient information for content error research so that a thorough investigation and resolution can be completed.

For each type error condition, a new CLEC Problem/Issue/File Retransmission form should be submitted.

EMI content errors should be attached in a separate file from the CLEC Problem/Issue/File Retransmission form

Elapsed time is measured in business days.

The clock starts when BellSouth receives CLEC's Problem/Issue/File Retransmission form.

The clock stops when BellSouth provides the corrected usage to the CLEC using the predesignated DUF delivery method.

This measure applies only to CLECs that are ODUF and ADUF participants

Calculation

Timeliness of Daily Usage EMI Content Errors Corrected = (a / b) X 100

- a = Total number of Daily Usage Records with EMI Content Errors Corrected in the reporting month within 10 Business Days.
- b = Total number of Daily Usage Records with EMI Content Errors corrected in reporting month.

Timeliness of Daily Usage Pack Format Errors Corrected = (c / d) X 100

- c = Total number of Daily Usage Packs with Format Errors Corrected in the reporting month within 4 Business Days.
- d = Total number of Daily Usage Packs with Format Errors corrected in reporting month

Report Structure

- CLEC Specific
  - Total number of BST disputed Daily Usage Records with EMI Content Errors received in reporting month.
  - Total number of Daily Usage Records with EMI Content Errors received in reporting month.
  - Total number of BST disputed Daily Usage Packs with Format Errors received in reporting month
  - Total number of Daily Usage Packs with Format Errors received in reporting month
- CLEC Aggregate
- Geographic Scope
  - Region

Data Retained

Relating to CLEC Experience

- Report Month
  - BellSouth Recorded
  - Non-BellSouth Recorded

Relating to BellSouth Performance

- None

SQM Level of Disaggregation - Analog/Benchmark

SQM Level of Disaggregation	SQM Analog/Benchmark
• Region	Diagnostic

SEEM Measure

SEEM	Tier I	Tier II
No		

SEEM Disaggregation - Analog/Benchmark

SEEM Disaggregation	SEEM Analog/Benchmark
• Not Applicable	Not Applicable

B-10: Percent Billing Errors Corrected in "X" Business Days

Definition

Measures timely carrier bill adjustments.

Exclusions

Adjustments that are initiated by BellSouth

Business Rules

This measure applies to CLEC wholesale bill adjustment requests. IXC Access billing adjustment requests are not reflected in this measure. Elapsed time is measured in business days. The clock starts when BellSouth receives the CLEC Billing Adjustment Request (BAR) form and the clock stops when BellSouth either makes an adjustment through BOCRIS or ACATS (generally next CLEC bill unless adjustment request after middle of the month) or BellSouth denies the request in BDATS or ACATS and BellSouth notifies the CLEC of the BAR resolution. BellSouth will report separately those adjustment requests that are disputed by BellSouth. (BAR form and instructions are found at www.interconnection.bellsouth.com/forms/html/billing&collections.html).

Calculation

Percent Billing Errors Corrected in 45 Business Days = (a / b) X 100

- a = Number of BAR resolutions sent in 45 Business Days
- b = Total Number of BAR resolutions due in Reporting Period

Report Structure

- CLEC Specific
- CLEC Aggregate
- Geographic Scope
  - State
  - Region

Data Retained

Relating to CLEC Experience

- Number of BellSouth Adjustments in 45 Business Days
- Total number of Billing Adjustment Requests in Reporting Period
- Number of Adjustments disputed by BellSouth (reported separately)

Relating to BellSouth Performance

- None

SQM Disaggregation - Retail Analog/Benchmark

SQM Level of Disaggregation	SQM Analog/Benchmark
• State	90% Billing Disputes <= 45 Business Days

SEEM Measure

SEEM	Tier I	Tier II
Yes	X	X

SEEM Disaggregation - Analog/Benchmark

SEEM Disaggregation	SEEM Analog/Benchmark
• State	90% Billing Disputes <= 45 Business Days

Note: In order to set an appropriate penalty provision, staff recommends deferring implementation of the penalty until conclusion of the commission proceeding on the remedy structure of the SEEM Plan, or 120 days, whichever comes first.

Section 6: Operator Services and Directory Assistance

OS-1: Speed to Answer Performance/Average Speed to Answer – Toll

Definition

Measurement of the average time in seconds calls wait before answered by a toll operator.

Exclusions

None

Business Rules

The clock starts when the customer enters the queue and the clock stops when a BellSouth representative answers the call or the customer abandons the call. The length of each call is determined by measuring, using a scanning technique, and accumulating the elapsed time from the entry of a customer call into the BellSouth call management system queue until the customer call is abandoned or transferred to BellSouth personnel assigned to handle calls for assistance. The system makes no distinction between CLEC customers and BellSouth customers.

Calculation

Speed to Answer Performance/Average Speed to Answer – Toll = a / b

- a = Total queue time
- b = Total calls answered

Note: Total queue time includes time that answered calls wait in queue as well as time abandoned calls wait in queue prior to abandonment.

Report Structure

- Reported for the aggregate of BellSouth and CLECs
  - State

Data Retained (on Aggregate Basis)

- For the items below, BellSouth's Performance Measurement Analysis Platform (PMAP) receives a final computation; therefore, no raw data file is available in PMAP
- Month
- Call Type (Toll)
- Average Speed of Answer

SQM Disaggregation - Analog/Benchmark

SQM Level of Disaggregation	SQM Analog/Benchmark
None	Parity by Design

SEEM Measure

SEEM	Tier I	Tier II
No		

SEEM Disaggregation - Analog/Benchmark

SEEM Disaggregation	SEEM Analog/Benchmark
• Not Applicable	Not Applicable

OS-2: Speed to Answer Performance/Percent Answered within "X" Seconds – Toll

Definition

Measurement of the percent of toll calls that are answered in less than ten seconds

Exclusions

None

Business Rules

The clock starts when the customer enters the queue and the clock stops when a BellSouth representative answers the call or the customer abandons the call. The length of each call is determined by measuring, using a scanning technique, and accumulating the elapsed time from the entry of a customer call into the BellSouth call management system queue until the customer call is abandoned or transferred to BellSouth personnel assigned to handle calls for assistance. The system makes no distinction between CLEC customers and BellSouth customers.

Calculation

The Percent Answered within "X" Seconds measurement for toll is derived by using the BellCore Statistical Answer Conversion Tables, to convert the Average Speed to Answer measure into a percent of calls answered within "X" seconds. The BellCore Conversion Tables are specific to the defined parameters of work time, number of operators, max queue size and call abandonment rates.

Report Structure

- Reported for the aggregate of BellSouth and CLECs
  - State

Data Retained (on Aggregate Basis)

- For the items below, BellSouth's Performance Measurement Analysis Platform (PMAP) receives a final computation; therefore, no raw data file is available in PMAP
- Month
- Call Type (Toll)
- Average Speed of Answer

SQM Disaggregation - Analog/Benchmark

SQM Level of Disaggregation:	SQM Analog/Benchmark
None	Parity by Design

SEEM Measure

SEEM	Tier I	Tier II
No		

SEEM Disaggregation - Analog/Benchmark

SEEM Disaggregation	SEEM Analog/Benchmark
• Not Applicable	Not Applicable

DA-1: Speed to Answer Performance/Average Speed to Answer – Directory Assistance (DA)

Definition

Measurement of the average time in seconds calls wait before answered by a DA operator.

Exclusions

None

Business Rules

The clock starts when the customer enters the queue and the clock stops when a BellSouth representative answers the call or the customer abandons the call. The length of each call is determined by measuring, using a scanning technique, and accumulating the elapsed time from the entry of a customer call into the BellSouth call management system queue until the customer call is abandoned or transferred to BellSouth personnel assigned to handle calls for assistance. The system makes no distinction between CLEC customers and BellSouth customers.

Calculation

Speed to Answer Performance/Average Speed to Answer – Directory Assistance (DA) = a / b

- a = Total queue time
- b = Total calls answered

Note: Total queue time includes time that answered calls wait in queue as well as time abandoned calls wait in queue prior to abandonment.

Report Structure

- Reported for the aggregate of BellSouth and CLECs
  - State

Data Retained (on Aggregate Basis)

- For the items below, BellSouth's Performance Measurement Analysis Platform (PMAP) receives a final computation; therefore, no raw data file is available in PMAP
- Month
- Call Type (DA)
- Average Speed of Answer

SQM Level of Disaggregation - Analog/Benchmark

SQM Level of Disaggregation	SQM Analog/Benchmark
None	Parity by Design

SEEM Measure

SEEM	Tier I	Tier II
No		

SEEM Disaggregation - Analog/Benchmark

SEEM Disaggregation	SEEM Analog/Benchmark
• Not Applicable	Not Applicable

DA-2: Speed to Answer Performance/Percent Answered within "X" Seconds – Directory Assistance (DA)

Definition

Measurement of the percent of DA calls that are answered in less than twelve seconds.

Exclusions

None

Business Rules

The clock starts when the customer enters the queue and the clock stops when a BellSouth representative answers the call or the customer abandons the call. The length of each call is determined by measuring, using a scanning technique, and accumulating the elapsed time from the entry of a customer call into the BellSouth call management system queue until the customer call is abandoned or transferred to BellSouth personnel assigned to handle calls for assistance. The system makes no distinction between CLEC customers and BellSouth customers.

Calculation

The Percent Answered within "X" Seconds measurement for DA is derived by using the BellCore Statistical Answer Conversion Tables, to convert the Average Speed to Answer measure into a percent of calls answered within "X" seconds. The BellCore Conversion Tables are specific to the defined parameters of work time, number of operators, max queue size and call abandonment rates.

Report Structure

- Reported for the aggregate of BellSouth and CLECs
  - State

Data Retained (on Aggregate Basis)

- For the items below, BellSouth's Performance Measurement Analysis Platform (PMAP) receives a final computation; therefore, no raw data file is available in PMAP.
- Month
- Call Type (DA)
- Average Speed of Answer

SQM Disaggregation - Analog/Benchmark

SQM Level of Disaggregation	SQM Analog/Benchmark
None	Parity by Design

SEEM Measure

SEEM	Tier I	Tier II
No		

SEEM Disaggregation - Analog/Benchmark

SEEM Disaggregation	SEEM Analog/Benchmark
• Not Applicable	Not Applicable

Section 7: Database Update Information

D-1: Average Database Update Interval

Definition

This report measures the interval from receipt of the database change request to the completion of the update to the database for Line Information Database (LIDB), Directory Assistance and Directory Listings.

Exclusions

- Updates Canceled by the CLEC
- Initial update when supplemented by CLEC
- BellSouth updates associated with internal or administrative use of local services.

Business Rules

The interval for this measure begins with the date and time stamp when a service order is completed and the completion notice is released to all systems to be updated with the order information including Directory Assistance, Directory Listings, and Line Information Database (LIDB). The end time stamp is the date and time of completion of updates to the system. This metric includes updates from stand-alone directory listing orders.

For BellSouth Results:

The BellSouth computation is identical to that for the CLEC with the clarifications noted below.

Other Clarifications and Qualification:

- For LIDB, the elapsed time for a BellSouth update is measured from the point in time when the BellSouth file maintenance process makes the LIDB update information available until the date and time reported by BellSouth that database updates are completed.
- Results for the CLECs are captured and reported at the update level by Reporting Dimension (see below).
- The Completion Date is the date upon which BellSouth issues the Update Completion Notice to the CLEC.
- If the CLEC initiates a supplement to the originally submitted update and the supplement reflects changes in customer requirements (rather than responding to BellSouth initiated changes), then the update submission date and time will be the date and time of BellSouth receipt of a syntactically correct update supplement. Update activities responding to BellSouth initiated changes will not result in changes to the update submission date and time used for the purposes of computing the update completion interval.
- Elapsed time is measured in hours and hundredths of hours rounded to the nearest tenth of an hour.
- Because this should be a highly automated process, the accumulation of elapsed time continues through off-schedule, weekends and holidays; however, scheduled maintenance windows are excluded.

Calculation

Update Interval = (a - b)

- a = Completion Date and Time of Database Update
- b = Submission Date and Time of Database Change

Average Update Interval = (c / d)

- c = Sum of all Update Intervals
- d = Total Number of Updates Completed During Reporting Period

Report Structure

- CLEC Specific (Under development)
- CLEC Aggregate
- BellSouth Aggregate
- Geographic Scope
  - Region

Data Retained

Relating to CLEC Experience

- Database File Submission Time
- Database File Update Completion Time
- CLEC Number of Submissions
- Total Number of Updates

Relating to BellSouth Performance

- Database File Submission Time
- Database File Update Completion Time
- BellSouth Number of Submissions
- Total Number of Updates

SQM Disaggregation - Analog/Benchmark

SQM Level of Disaggregation	SQM Analog/Benchmark
• Database Type	Parity by Design
• LIDB	
• Directory Listings	
• Directory Assistance	

SEEM Measure

SEEM	Tier I	Tier II
No		

SEEM Disaggregation - Analog/Benchmark

SEEM Disaggregation	SEEM Analog/Benchmark
• Not Applicable	Not Applicable

D-2: Percent Database Update Accuracy

Definition

This report measures the accuracy of database updates by BellSouth for Line Information Database (LIDB) Directory Assistance and Directory Listings using a statistically valid sample of completed CLEC Service Orders in a manual review. This manual review is not conducted on BellSouth Service Orders.

Exclusions

- Updates canceled by the CLEC
- Initial update when supplemented by CLEC
- CLEC orders that had CLEC errors
- BellSouth updates associated with internal or administrative use of local services.

Business Rules

For each update reviewed during the reporting period, the original update that the CLEC sent to BellSouth is compared to the database following completion of the update by BellSouth. An update is "completed without error" if the database completely and accurately reflects the activity specified on the original and supplemental update (e.g., orders) submitted by the CLEC. Each database (e.g., LIDB, Directory Assistance and Directory Listings) should be separately tracked and reported.

A statistically valid sample of completed CLEC Service Orders is pulled each month. This metric includes updates from stand-alone directory listing orders.

Calculation

Percent Update Accuracy = (a / b) X 100

- a = Number of Updates Completed Without Error
- b = Number Updates Completed

Report Structure

- CLEC Aggregate
- CLEC Specific (not available in this report)
- BellSouth Aggregate (not available in this report)
- Geographic Scope
  - Region

Data Retained

Relating to CLEC Experience

- Report Month
- CLEC Order Number (so_nbr) and PON (PON)
- Local Service Request (LSR)
- Order Submission Date
- Number of Orders Reviewed

Note: Code in parentheses is the corresponding header found in the raw data file.

Relating to BellSouth Performance

- Not Applicable

SQM Disaggregation - Analog/Benchmark

SQM Level of Disaggregation	SQM Analog/Benchmark
• Database Type - LIDB - Directory Listings - Directory Assistance	95% Accurate

SEEM Measure

SEEM	Tier I	Tier II
No		

SEEM Disaggregation - Analog/Benchmark

SEEM Disaggregation	SEEM Analog/Benchmark
• Not Applicable	Not Applicable

D-3: Percent NXXs and LRNs Loaded by the LERG Effective Date

Definition

Measurement of the percent of NXX(s) and Location Routing Numbers LRN(s) loaded and tested in new end office and/or tandem switches by the Local Exchange Routing Guide (LERG) effective date when facilities are in place. BellSouth has a single provisioning process for both NXX(s) and LRN(s). In this measure BellSouth will identify whether or not a particular NXX has been flagged as LNP capable (set triggers for dips) by the LERG effective date.

Exclusions

- Activation requests where the CLEC's interconnection arrangements and facilities are not in place by the LERG effective date.
- Expedite requests

Business Rules

Data for the initial NXX(s) and LRN(s) in a local calling area will be based on the LERG effective date or completion of the initial interconnection trunk group(s), whichever is longer. Data for additional NXX(s) in the local calling area will be based on the LERG effective date. The LERG effective date is loaded into the system at the request of the CLEC. It is contingent upon the CLEC to engineer, order, and install interconnection arrangements and facilities prior to that date.

The total Count of NXX(s) and LRN(s) that were scheduled to be loaded and those that were loaded by the LERG effective date in BellSouth switches will be captured in the Work Force Administration - Dispatch In database.

An LRN is assigned by the owner of the switch and is placed into the software translations for every switch to be used as an administrative pointer to route NXX(s) in LNP capable switches. The LRN is a result of Local Number Porting and is housed in a national database provided by the Number Portability Administration Center (NPAC). The switch owner is responsible for notifying NPAC and requesting the effective date that will be reflected in the LERG. The national database downloads routing tables into BellSouth's Service Control Point (SCP) regional databases, which are queried by switches when routing ported numbers.

The basic NXX routing process includes the addition of all NXX(s) in the response translations. This addition to response translations is what supports LRN routing. Routing instructions for all NXX(s), including LRN(s), are received from the Advance Routing & Trunking System (ARTS) and all routing, including response, is established based on the information contained in the Translation Work Instructions (TWINs) document.

Calculation

Percent NXXs/LRNs Loaded and Tested Prior to the LERG Effective Date = (a / b) X 100

- a = Count of NXXs and LRNs loaded by the LERG effective date
- b = Total NXXs and LRNs to be scheduled and loaded by the LERG effective date

Report Structure

- CLEC Specific
- CLEC Aggregate
- BellSouth (Not Applicable)
- Geographic Scope
  - Region

Data Retained

Relating to CLEC Experience

- Company Name
- Company Code
- NPA/NXX
- LERG Effective Date
- Loaded Date

Relating to BellSouth Performance

- Not Applicable

SQM Disaggregation - Analog/Benchmark

SQM Level of Disaggregation	SQM Analog/Benchmark
• Geographic Scope - Region	100% by LERG Effective Date

SEEM Measure

SEEM	Tier I	Tier II
No		

SEEM Disaggregation - Analog/Benchmark

SEEM Disaggregation	SEEM Analog/Benchmark
• Not Applicable	Not Applicable

Section 8: E911

E-1: Timeliness

Definition

Measures the percent of batch orders for E911 database updates (to CLEC resale and BellSouth retail records) processed successfully within a 24-hour period.

Exclusions

- Any resale order canceled by a CLEC
- Facilities-based CLEC orders

Business Rules

The 24-hour processing period is calculated based on the date and time processing starts on the batch orders and the date and time processing stops on the batch orders. Mechanical processing starts when SCC (the BellSouth E911 vendor) receives E911 files containing batch orders extracted from the BellSouth Service Order Control System (SOCS). Processing stops when SCC loads the individual records to the E911 database. The E911 database includes updates to the Automatic Location Identification (ALI) database. The system makes no distinction between CLEC resale records and BellSouth retail records.

Calculation

E911 Timeliness = (a / b) X 100

- a = Number of batch orders processed within 24 hours
- b = Total number of batch orders submitted

Report Structure

Reported for the aggregate of CLEC resale updates and BellSouth retail updates

- State
- Region

Data Retained

- Report Month
- Aggregate Data

SQM Disaggregation - Analog/Benchmark

SQM Level of Disaggregation	SQM Analog/Benchmark
None	Parity by Design

SEEM Measure

SEEM	Tier I	Tier II
No		

SEEM Disaggregation - Analog/Benchmark

SEEM Disaggregation	SEEM Analog/Benchmark
• Not Applicable	Not Applicable

E-2: Accuracy

Definition

Measures the percent of E911 telephone number (TN) record updates (to CLEC resale and BellSouth retail records) processed successfully for E911 (including the Automatic Location Identification (ALI) database).

Exclusions

- Any resale order canceled by a CLEC
- Facilities-based CLEC orders

Business Rules

Accuracy is based on the number of records processed without error at the conclusion of the processing cycle. Mechanical processing starts when SCC (the BellSouth E911 vendor) receives E911 files containing telephone number (TN) records extracted from BellSouth's Service Order Control System (SOCS). The system makes no distinction between CLEC resale records and BellSouth retail records.

Calculation

E911 Accuracy = (a / b) X 100

- a = Number of record individual updates processed with no errors
- b = Total number of individual record updates

Report Structure

Reported for the aggregate of CLEC resale updates and BellSouth retail updates

- State
- Region

Data Retained

- Report Month
- Aggregate Data

SQM Disaggregation - Analog/Benchmark

SQM Level of Disaggregation	SQM Analog/Benchmark
• None	Parity by Design

SEEM Measure

SEEM	Tier I	Tier II
No		

SEEM Disaggregation - Analog/Benchmark

SEEM Disaggregation	SEEM Analog/Benchmark
• Not Applicable	Not Applicable

E-3: Mean Interval

Definition

Measures the mean interval processing of E911 batch orders (to update CLEC resale and BellSouth retail records) including processing against the Automatic Location Identification (ALI) database.

Exclusions

- Any resale order canceled by a CLEC
- Facilities-based CLEC orders

Business Rules

The processing period is calculated based on the date and time processing starts on the batch orders and the date and time processing stops on the batch orders. Data is posted is 4-hour increments up to and beyond 24 hours. The system makes no distinction between CLEC resale records and BellSouth retail records.

Calculation

E911 Interval = (a - b)

- a = Date and time of batch order completion
- b = Date and time of batch order submission

E911 Mean Interval = (c / d)

- c = Sum of all E911 Intervals
- d = Number of batch orders completed

Report Structure

Reported for the aggregate of CLEC resale updates and BellSouth retail updates

- State
- Region

Data Retained

- Report Month
- Aggregate Data

SQM Disaggregation - Analog/Benchmark

SQM Level of Disaggregation	SQM Analog/Benchmark
None	Parity by Design

SEEM Measure

SEEM	Tier I	Tier II
No		

SEEM Disaggregation - Analog/Benchmark

SEEM Disaggregation	SEEM Analog/Benchmark
• Not Applicable	Not Applicable

Section 9: Trunk Group Performance

TGP-1: Trunk Group Performance-Aggregate

Definition

The Trunk Group Performance report displays, over a reporting cycle, aggregate, average trunk group blocking data for each hour of each day of the reporting cycle, for both CLEC affecting and BellSouth affecting trunk groups.

Exclusions

- Trunk Groups blocked due to unanticipated significant increase in CLEC traffic
- Orders that are delayed or refused by CLEC
- Trunk Groups for which there was no valid data available for an entire study period
- Duplicate trunk group information
- Trunk Groups blocked due to CLEC network/equipment failure
- Final Groups actually overflowing, not blocked

Business Rules

The purpose of the Trunk Group Performance Report is to provide trunk blocking measurements on CLEC and BellSouth trunk groups for comparison only. It is not the intent of the report that it be used for network management and/or engineering. BellSouth should notify the CLEC when such blocking meets this exclusion criteria (orders that are delayed or refused by the CLEC) and report the results, both with and without the exclusions. An unanticipated significant increase in traffic is indicated by a 20% increase for small trunk groups or 1800 CCS for large groups over the previous months traffic when the increase was not forecasted by the CLEC.

Monthly Average Blocking:

- The reporting cycle includes both business and non-business days in a calendar month.
- Monthly average blocking values are calculated for each trunk group for each of the 24 time consistent hours across a reporting cycle.

Aggregate Monthly Blocking:

- Used to compare aggregate blocking across trunk groups which terminate traffic at CLEC points of presence versus BellSouth switches.
- Aggregate monthly blocking data is calculated for each hour of the day across all trunk groups assigned to a category.

Trunk Categorization:

- This report displays, over a reporting cycle, aggregate, average blocking data for each hour of a day. Therefore, for each reporting cycle, 24 blocking data points are generated for two aggregate groups of selected trunk groups. These groups are CLEC affecting and BellSouth affecting trunk groups. In order to assign trunk groups to each aggregate group, all trunk groups are first assigned to a category. A trunk group's end points and the type of traffic that is transmitted on it define a category. Selected categories of trunk groups are assigned to the aggregate groups so that trunk reports can be generated. The categories to which trunk groups have been assigned for this report are as follows.

CLEC Affecting Categories:

	Point A	Point B
Category 1:	BellSouth End Office	BellSouth Access Tandem
Category 3:	BellSouth End Office	CLEC Switch
Category 4:	BellSouth Local Tandem	CLEC Switch
Category 5:	BellSouth Access Tandem	CLEC Switch

Category 10:..... BellSouth End Office ..... BellSouth Local Tandem

Category 16:..... BellSouth Tandem..... BellSouth Tandem

BellSouth Affecting Categories:

	Point A	Point B
Category 1:	BellSouth End Office	BellSouth Access Tandem
Category 9:	BellSouth End Office	BellSouth End Office
Category 10:	BellSouth End Office	BellSouth Local Tandem
Category 16:	BellSouth Tandem	BellSouth Tandem

Calculation

Monthly Average Blocking:

- For each hour of the day, each day's raw data are summed across all valid measurements days in a report cycle for blocked and attempted calls.
- The sum of the blocked calls is divided by the total number of calls attempted in a reporting period.

Aggregate Monthly Blocking:

- For each hour of the day, the monthly sums of the blocked and attempted calls from each trunk group are separately aggregated over all trunk groups within each assigned category.
- The total blocked calls is divided by the total call attempts within a group to calculate an aggregate monthly blocking for each assigned group.
- The result is an aggregate monthly average blocking value for each of the 24 hours by group.
- The difference between the CLEC and BellSouth affecting trunk groups are also calculated for each hour.

Report Structure

- CLEC Aggregate
- BellSouth Aggregate
  - State
- With and Without Exclusion for Orders Delayed or Refused by CLEC

Data Retained

Relating to CLEC Experience

- Report Month
- Total Trunk Groups
- Number of Trunk Groups by CLEC
- Hourly Blocking Per Trunk Group
- Hourly Usage Per Trunk Group
- Hourly Call Attempts Per Trunk Group

Related to BellSouth Performance

- Report Month
- Total Trunk Groups
- Aggregate Hourly Blocking Per Trunk Group
- Hourly Usage Per Trunk Group
- Hourly Call Attempts Per Trunk Group

SQM Disaggregation - Analog/Benchmark

SQM Level of Disaggregation	SQM Analog/Benchmark
• CLEC Aggregate	Any consecutive 2 hour period in 24 hours where CLEC blockage exceeds BellSouth blockage by more than 0.5% using trunk groups 1, 3, 4, 5, 10, 16 for CLECs and 9 for BellSouth
• BellSouth Aggregate	

SEEM Measure

SEEM	Tier I	Tier II
Yes		X

SEEM Disaggregation - Analog/Benchmark

SEEM Disaggregation	SEEM Analog/Benchmark
• CLEC Aggregate	Any consecutive 2 hour period in 24 hours where CLEC blockage exceeds BellSouth blockage by more than 0.5% using trunk groups 1,3,4,5,10,16 for CLECs and 9 for BellSouth
• BellSouth Aggregate	

TGP-2: Trunk Group Performance – CLEC Specific

Definition

The Trunk Group Performance report displays, over a reporting cycle, CLEC specific, average trunk group blocking data for each hour of each day of the reporting cycle, for both CLEC affecting and BellSouth affecting trunk groups.

Exclusions

- Trunk Groups blocked due to unanticipated significant increase in CLEC traffic
- Orders that are delayed or refused by CLEC
- Trunk Groups for which there was no valid data available for an entire study period
- Duplicate trunk group information
- Trunk Groups blocked due to CLEC network/equipment failure
- Final Groups actually overflowing not blocked

Business Rules

The purpose of the Trunk Group Performance Report is to provide trunk blocking measurements on CLEC and BellSouth trunk groups for comparison only. It is not the intent of the report that it be used for network management and/or engineering. BellSouth should notify the CLEC when such blocking meets this exclusion criteria (orders that are delayed or refused by the CLEC) and report the results, both with and without the exclusions. An unanticipated significant increase in traffic is indicated by a 20% increase for small trunk groups or 1800 CCS for large groups over the previous months traffic when the increase was not forecasted by the CLEC.

Monthly Average Blocking:

- The reporting cycle includes both business and non-business days in a calendar month.
- Monthly average blocking values are calculated for each trunk group for each of the 24 time consistent hours across a reporting cycle.

Aggregate Monthly Blocking:

- Used to compare aggregate blocking across trunk groups which terminate traffic at CLEC points of presence versus BellSouth switches.
- Aggregate monthly blocking data is calculated for each hour of the day across all trunk groups assigned to a category.

Trunk Categorization:

- This report displays, over a reporting cycle, aggregate, average blocking data for each hour of a day. Therefore, for each reporting cycle, 24 blocking data points are generated for two aggregate groups of selected trunk groups. These groups are CLEC affecting and BellSouth affecting trunk groups. In order to assign trunk groups to each aggregate group, all trunk groups are first assigned to a category. A trunk group's end points and the type of traffic that is transmitted on it define a category. Selected categories of trunk groups are assigned to the aggregate groups so that trunk reports can be generated. The categories to which trunk groups have been assigned for this report are as follows.

CLEC Affecting Categories:

	Point A	Point B
Category 1:	BellSouth End Office	BellSouth Access Tandem
Category 3:	BellSouth End Office	CLEC Switch
Category 4:	BellSouth Local Tandem	CLEC Switch
Category 5:	BellSouth Access Tandem	CLEC Switch
Category 10:	BellSouth End Office	BellSouth Local Tandem

Category 16:..... BellSouth Tandem..... BellSouth Tandem

BellSouth Affecting Categories:

	Point A	Point B
Category 1:	BellSouth End Office	BellSouth Access Tandem
Category 9:	BellSouth End Office	BellSouth End Office
Category 10:	BellSouth End Office	BellSouth Local Tandem
Category 16:	BellSouth Tandem	BellSouth Tandem

Calculation

Monthly Average Blocking:

- For each hour of the day, each day's raw data are summed across all valid measurements days in a report cycle for blocked and attempted calls.
- The sum of the blocked calls is divided by the total number of calls attempted in a reporting period.

Aggregate Monthly Blocking:

- For each hour of the day, the monthly sums of the blocked and attempted calls from each trunk group are separately aggregated over all trunk groups within each assigned category.
- The total blocked calls is divided by the total call attempts within a group to calculate an aggregate monthly blocking for each assigned group.
- The result is an aggregate monthly average blocking value for each of the 24 hours by group.
- The difference between the CLEC and BellSouth affecting trunk groups are also calculated for each hour.

Report Structure

- CLEC Specific
  - State
- With and Without Exclusion for Orders Delayed or Refused by CLEC

Data Retained

Relating to CLEC Experience

- Report Month
- Total Trunk Groups
- Number of Trunk Groups by CLEC
- Hourly Blocking Per Trunk Group
- Hourly Usage Per Trunk Group
- Hourly Call Attempts Per Trunk Group

Relating to BellSouth Performance

- Report Month
- Total Trunk Groups
- Aggregate Hourly Blocking Per Trunk Group
- Hourly Usage Per Trunk Group
- Hourly Call Attempts Per Trunk Group

SQM Disaggregation - Analog/Benchmark

SQM Level of Disaggregation	SQM Analog/Benchmark
• CLEC Trunk Group	Any 2 consecutive hour period in 24 hours where CLEC blockage exceeds BellSouth blockage by more than 0.5% using trunk groups 1, 3, 4, 5, 10, 16 for CLECs and 9 for BellSouth

SEEM Measure

SEEM	Tier I	Tier II
Yes	X	

SEEM Disaggregation - Analog/Benchmark

SEEM Disaggregation	SEEM Analog/Benchmark
• CLEC Trunk Group	Any 2 consecutive hour period in 24 hours where CLEC blockage exceeds BellSouth blockage by more than 0.5% using trunk groups 1, 3, 4, 5, 10, 16 for CLECs and 9 for BellSouth
• BellSouth Trunk Group	

Section 10: Collocation

C-1: Collocation Average Response Time

Definition

Measures the average time (counted in calendar days) from the receipt of a complete and accurate collocation application (including receipt of application fee if required) to the date BellSouth returns a response electronically or in writing. Within the number of calendar days as designated by the Collocation order after having received a bona fide application for physical collocation, BellSouth must respond with space availability and a price quote.

Exclusions

Any application canceled by the CLEC

Business Rules

The clock starts on the date that BellSouth receives a complete and accurate collocation application accompanied by the appropriate application fee if required. The clock stops on the date that BellSouth returns a response. The clock will restart upon receipt of changes to the original application request.

Calculation

Response Time = (a - b)

- a = Request Response Date
- b = Request Submission Date

Average Response Time = (c / d)

- c = Sum of all Response Times
- d = Count of Responses Returned within Reporting Period

Report Structure

- Individual CLEC (alias) aggregate
- Aggregate of all CLECs
- Geographic Scope
  - State

Data Retained

- Report period
- Aggregate data

SQM Disaggregation - Analog/Benchmark

SQM Level of Disaggregation	SQM Analog/Benchmark
State	Virtual - 15 Calendar Days
Virtual-Initial	Physical Caged - 15 Calendar Days
Virtual-Augment	Physical Cageless - 15 Calendar Days
Physical Caged-Initial	
Physical Caged-Augment	
Physical-Cageless-Initial	
Physical Cageless-Augment	

SEEM Measure

SEEM	Tier I	Tier II
No		

SEEM Disaggregation - Analog/Benchmark

SEEM Disaggregation	SEEM Analog/Benchmark
• Not Applicable	Not Applicable

C-2: Collocation Average Arrangement Time

Definition

Measures the average time (counted in calendar days) from receipt of a complete and accurate Bona Fide firm order (including receipt of appropriate fee if required) to the date BellSouth completes the collocation arrangement and notifies the CLEC.

Exclusions

Any Bona Fide firm order canceled by the CLEC

Business Rules

The clock starts on the date that BellSouth receives a complete and accurate Bone Fide firm order accompanied by the appropriate fee. The clock stops on the date that BellSouth completes the collocation arrangement and notifies the CLEC. The cable assignments associated with the specific collocation request will be provided prior to completion of the arrangement.

Calculation

Arrangement Time = (a - b)

- a = Date Collocation Arrangement is Complete
- b = Date Order for Collocation Arrangement Submitted

Average Arrangement Time = (c / d)

- c = Sum of all Arrangement Times
- d = Total Number of Collocation Arrangements Completed during Reporting Period

Report Structure

- Individual CLEC (alias) Aggregate
- Aggregate of all CLECs
- Geographic Scope
  - State

Data Retained

- Report Period
- Aggregate Data

SQM Disaggregation - Analog/Benchmark

SQM Level of Disaggregation	SQM Analog/Benchmark
• State	Virtual - 60 Calendar Days
• Virtual-Initial	Virtual-Augment - 60 Calendar Days (Without Space Increase)
• Virtual-Augment	Virtual-Augment - 60 Calendar Days (With Space Increase)
• Physical Caged-Initial	Physical Caged - 90 Calendar Days (Ordinary)
• Physical Caged-Augment	Physical Caged-Augment - 45 Calendar Days (Without Space Increase)
• Physical Cageless-Initial	Physical Caged-Augment - 90 Calendar Days (With Space Increase)
• Physical Cageless-Augment	Physical Cageless - 90 Calendar Days Physical Cagedless-Augment - 45 Calendar Days (Without

Space Increase)
Physical Cagedless-Augment - 90 Calendar Days (With Space Increase)

SEEM Measure

SEEM	Tier I	Tier II
No		

SEEM Disaggregation - Analog/Benchmark

SEEM Disaggregation	SEEM Analog/Benchmark
• Not Applicable	Not Applicable

C-3: Collocation Percent of Due Dates Missed

Definition

Measures the percent of missed due dates for both virtual and physical collocation arrangements

Exclusions

Any Bona Fide firm order canceled by the CLEC

Business Rules

Percent Due Dates Missed is the percent of total collocation arrangements which BellSouth is unable to complete by end of the BellSouth committed due date. The arrangement is considered a missed due date if it is not completed on or before the committed due date.

Calculation

% of Due Dates Missed = (a / b) X 100

- a = Number of Completed Orders that were not completed by BellSouth Committed Due Date during Reporting Period
- b = Number of Orders Completed in Reporting Period

Report Structure

- Individual CLEC (alias) aggregate
- Aggregate of all CLECs
- Geographic Scope
  - State

Data Retained

- Report Period
- Aggregate Data

SQM Disaggregation - Analog/Benchmark

SQM Level of Disaggregation	SQM Analog/Benchmark
State	>= 95% on time
Virtual-Initial	
Virtual- Augment	
Physical Caged- Initial	
Physical Caged- Augment	
Physical Cageless- Initial	
Physical Cageless- Augment	

SEEM Measure

SEEM	Tier I	Tier II
Yes	X	X

SEEM Disaggregation - Analog/Benchmark

SEEM Disaggregation	SEEM Analog/Benchmark
• All Collocation Arrangements	>= 95% on time

Section 11: Change Management

CM-1: Timeliness of Change Management Notices

Definition

Measures whether CLECs receive required software release notices on time to prepare for BellSouth interface/system changes so CLEC interfaces are not impaired by change.

Exclusions

- Changes to release dates for reasons outside BellSouth control, such as the system software vendor changes. For example: a patch to fix a software problem.
- Type 6 Change Requests (Defects/Expedites), as defined by the Change Control Process (CCP)

Business Rules

This metric is designed to measure the percent of change management notices sent to the CLECs according to notification standards and time frames set forth in the Change Control Process. The CCP is used by BellSouth and the CLECs to manage requested changes to the BellSouth Local Interfaces.

The clock starts on the notification date. The clock stops on the software release date. When project events occur (scope changes, analysis information, etc.), the software release date may change. A revised notification would be required and the clock would restart. Based on release constraints for defects/expedites, notification may be less than the agreed upon interval in the CCP for new features.

Calculation

Timeliness of Change Management Notices = (a / b) X 100

- a = Total number of Change Management Notifications Sent Within Required Time frames
- b = Total Number of Change Management Notifications Sent

Report Structure

- BellSouth Aggregate
- Geographic Scope
  - Region

Data Retained

- Report Period
- Notice Date
- Release Date

SQM Disaggregation - Analog/Benchmark

SQM Level of Disaggregation	SQM Analog/Benchmark
• Region	98% on time

SEEM Measure

SEEM	Tier I	Tier II
Yes		X

SEEM Disaggregation - Analog/Benchmark

SEEM Disaggregation	SEEM Analog/Benchmark
• Region	98% on time

CM-2: Change Management Notice Average Delay Days

Definition

Measures the average delay days for change management system release notices sent outside the time frame set forth in the Change Control Process.

Exclusions

- Changes to release dates for reasons outside BellSouth control, such as the system vendor
- Type 6 Change Requests (Defects/Expedites), as defined by the Change Control Process

Business Rules

This metric is designed to compute the average delay days for change management notices sent to the CLECs outside the time frames set forth in the Change Control Process. The CCP is used by BellSouth and the CLECs to manage requested changes to the BellSouth Local Interfaces.

The clock starts on the notification due date. The clock stops on the software release date. When project events occur (scope changes, analysis information, etc.), the software release date may change. A revised notification would be required and the clock would restart. Based on release constraints for defects/expedites, notification may be less than the agreed upon interval in the CCP for new features

Calculation

Change Management Notice Delay Days = (a - b)

- a = Date Notice Sent
- b = Date Notice Due

Change Management Notice Average Delay Days = (c / d)

- c = Sum of all Change Management Notice Delay Days
- d = Total Number of Notices Sent Late

Report Structure

- BellSouth Aggregate
- Geographic Scope
  - Region

Data Retained

- Report Period
- Notice Date
- Release Date

SQM Disaggregation - Analog/Benchmark

SQM Level of Disaggregation	SQM Analog/Benchmark
Region	<= 5 Days

SEEM Measure

SEEM	Tier I	Tier II
No		

SEEM Disaggregation - Analog/Benchmark

SEEM Disaggregation	SEEM Analog/Benchmark
• Not Applicable	Not Applicable

CM-3: Timeliness of Documents Associated with Change

Definition

Measures whether CLECs received requirements or business rule documentation on time to prepare for BellSouth interface/system changes so CLEC interfaces are not impaired by change.

Exclusions

- Documentation for release dates that slip less than 30 days for a change mandated by regulatory or legal entities (Federal Communications Commission [FCC], a state commission/authority, or state and federal courts) or CLEC request.
- Type 6 Change Requests (Defects/Expedites), as defined by the Change Control Process.

Business Rules

This metric is designed to measure the percent of requirements or business rule documentation sent to the CLECs according to documentation standards and time frames set forth in the Change Control Process, a copy of which can be found at http://www.interconnection.bellsouth.com/markets/lec/ccp_live/index.html. The CCP is used by BellSouth and the CLECs to manage requested changes to the BellSouth Local Interfaces.

The clock starts on the business rule documentation release date. The clock stops on the software release date. When project events occur (scope changes, analysis information, etc.), the software release date may change. Revisions to documentation could be required and the clock would restart.

Calculation

Timeliness of Documents Associated with Change = (a / b) X 100

- a = Change Management Documentation Sent Within Required Time frames after Notices
- b = Total Number of Change Management Documentation Sent

Report Structure

- BellSouth Aggregate
- Geographic Scope
  - Region

Data Retained

- Report Period
- Notice Date
- Release Date

SQM Disaggregation - Analog/Benchmark

SQM Level of Disaggregation	SQM Analog/Benchmark
• Region	98% on Time

SEEM Measure

SEEM	Tier I	Tier II
Yes		X

SEEM Disaggregation - Analog/Benchmark

SEEM Disaggregation	SEEM Analog/Benchmark
• Region	98% on Time

CM-4: Change Management Documentation Average Delay Days

Definition

Measures the average delay days for requirements or business rule documentation sent outside the time frames set forth in the Change Control Process.

Exclusions

- Documentation for release dates that slip less than 30 days for reasons outside BellSouth control, such as changes due to Regulatory mandate or CLEC request.
- Type 6 Change Requests (Defects/Expedites), as defined by the Change Control Process.

Business Rules

This metric is designed to compute the average delay days for business rule documentation sent to the CLECs outside the time frames set forth in the Change Control Process. The CCP is used by BellSouth and the CLECs to manage requested changes to the BellSouth Local Interfaces.

The clock starts on the business rule documentation release date. The clock stops on the software release date. When project events occur (scope changes, analysis information, etc.), the software release date may change. Revisions to documentation could be required and the clock would restart.

Calculation

Change Management Documentation Delay Days = (a - b)

- a = Date Documentation Provided
- b = Date Documentation Due

Change Management Documentation Average Delay Days = (c / d)

- c = Sum of all CM Documentation Delay Days
- d = Total Change Management Documents Sent

Report Structure

- BellSouth Aggregate
- Geographic Scope
  - Region

Data Retained

- Report Period
- Notice Date
- Release Date

SQM Disaggregation - Analog/Benchmark

SQM Level of Disaggregation	SQM Analog/Benchmark
• Region	<= 5 Days

SEEM Measure

SEEM	Tier I	Tier II
No		

SEEM Disaggregation - Analog/Benchmark

SEEM Disaggregation	SEEM Analog/Benchmark
• Not Applicable	Not Applicable

CM-5: Notification of CLEC Interface Outages

Definition

Measures the time it takes BellSouth to notify the CLEC of an outage of an interface.

Exclusions

None

Business Rules

This metric measures the process of notifying CLECs of an interface outage as defined by the Change Control Process Documentation. BellSouth has 15 minutes to notify the CLECs via email, once the Help Desk has verified the existence of an outage. An outage is verified to exist when on or more of the following conditions occur:

1. BellSouth can duplicate a CLEC reported error.
2. BellSouth finds an error message within the system error log that identifiably matches a CLEC reported outage.
3. When 3 or more CLECs report the identical type of outage.
4. BellSouth detects a problem due to the loss of functionality for users of a system.

Note: The 15 minute clock begins once a CLEC reported or a BellSouth detected outage has lasted for 20 minutes and has been verified. If the outage is not verified within 20 minutes, the clock begins at the point of verification.

This metric will be expressed as a percentage.

Calculation

Notification of CLEC Interface Outages = (a / b) X 100

- a = Number of Interface Outages where CLECs are notified within 15 minutes
- b = Total Number of Interface Outages

Report Structure

- CLEC Aggregate
- Geographic Scope
  - Region

Data Retained

Relating to CLEC Experience

- Number of Interface Outages
- Number of Notifications <= 15 minutes

Relating to BellSouth Performance

- Not Applicable

SQM Disaggregation - Analog/Benchmark

SQM Level of Disaggregation	SQM Analog/Benchmark
• By interface type for all interfaces accessed by CLECs	97% <= 15 Minutes

Interface	Applicable to
EDI	CLEC
CSOTS	CLEC
LENS	CLEC
TAG	CLEC
ECTA	CLEC
TAFI	CLEC/BellSouth

SEEM Measure

SEEM	Tier I	Tier II
No		

SEEM Disaggregation - Analog/Benchmark

SEEM Disaggregation	SEEM Analog/Benchmark
• Not Applicable	Not Applicable

CM-6: Percent of Software Errors Corrected in "X" (10, 30, 45) Business Days

Definition

Measures the percent of all outstanding Software Errors due and overdue to be corrected by BellSouth in "X" (10, 30, 45) business days within the monthly report period.

Exclusions

- Software Corrections having implementation intervals that are longer than those defined in this measure and agreed upon by the CLECs
- Rejected or reclassified software errors (BellSouth must report the number of rejected or reclassified software errors disputed by the CLECs)

Business Rules

This metric is designed to measure BellSouth's performance each month in correcting identified Software Errors within the specified interval. The clock starts when a Software Error validated per the Change Control Process, a copy of which can be found at http://www.interconnection.bellsouth.com/markets/lec/ccp_live/index.html, and stops when the error is corrected and notice posted to the Change Control Website. The monthly report should include all defects due and overdue to be corrected within the report period. Software defects are defined as Type 6 Change Requests in the Change Control Process.

Calculation

Percent of Software Errors Corrected in "X" (10, 30, 45) Business Days = (a / b) X 100

- a = Total number of Software Errors Corrected where "X" = 10, 30, or 45 Business Days.
- b = Total number of Software Errors requiring correction where "X" = 10, 30, or 45 Business Days.

Report Structure

- Severity 2 = 10 Business Days
- Severity 3 = 30 Business Days
- Severity 4 = 45 Business Days

Data Retained

- Report Period
- Total Completed
- Total Completed within "X" Business Days
- Disputed, Rejected or Reclassified Software Errors

SQM Level of Disaggregation - Analog/Benchmark

SQM Level of Disaggregation	SQM Analog/Benchmark
• Region	95% within interval

SEEM Measure

SEEM	Tier I	Tier II
Yes		X

SEEM Disaggregation - Analog/Benchmark

SEEM Disaggregation	SEEM Analog/Benchmark
• Region	95% within interval

CM-7: Percent of Change Requests Accepted or Rejected within 10 Days

Definition

Measures the percent of Change Requests other than Type 1 or Type 6 Change Requests, submitted by CLECs that are Accepted or Rejected by BellSouth in 10 business days within the report period.

Exclusions

- Change Requests that are canceled or withdrawn before a response from BellSouth is due.

Business Rules

The Acceptance/Rejection interval starts when the acknowledgement is due to the CLEC per the Change Control Process, a copy of which can be found at http://www.interconnection.bellsouth.com/markets/lec/ccp_live/index.html. The clock ends when BellSouth issues an acceptance or rejection notice to the CLEC. This metric includes all change requests not subject to the above exclusions, not just those received and accepted or rejected in the reporting period.

Calculation

Percent of Change Requests Accepted or Rejected within 10 Business Days = (a / b) X 100

- a = Total number of Change Requests accepted or rejected within 10 business days
- b = Total number of Change Requests submitted in the reporting period

Report Structure

- BellSouth Aggregate

Data Retained

- Report Period
- Requests Accepted or Rejected
- Total Requests

SQM Level of Disaggregation - Analog/Benchmark

SQM Level of Disaggregation	SQM Analog/Benchmark
• Region	95% within interval

SEEM Measure

SEEM	Tier I	Tier II
Yes		X

SEEM Disaggregation - Analog/Benchmark

SEEM Disaggregation	SEEM Analog/Benchmark
• Region	95% within interval

CM-8: Percent Change Requests Rejected

Definition

Measures the percent of Change Requests (other than Type 1 or Type 6 Change Requests) submitted by CLECs that are rejected by reason within the report period.

Exclusions

- Change Requests that are canceled or withdrawn before a response from BellSouth is due.

Business Rules

This metric includes any rejected change requests in the reporting period, regardless of whether received early or late. The metric will be disaggregated by major categories of rejections per the Change Control Process, a copy of which can be found at http://www.interconnection.bellsouth.com/markets/lec/ccp_live/index.html. These reasons are: Cost, Technical Feasibility, and Industry Direction. This metric includes all change requests not subject to the above exclusions, not just those received and accepted or rejected in the same reporting period.

Calculation

Percent Change Requests Rejected = (a / b) X 100

- a = Total number of Change Requests rejected
- b = Total number of Change Requests submitted within the report period

Report Structure

- BellSouth Aggregate
- Cost
- Technical Feasibility

Data Retained

- Report Period
- Requests Rejected
- Total Requests

SQM Level of Disaggregation - Analog/Benchmark

SQM Level of Disaggregation	SQM Analog/Benchmark
Region	Diagnostic
Reason – Cost	
Reason – Technical Feasibility	
Reason – Industry Direction	

SEEM Measure

SEEM	Tier I	Tier II
No		

SEEM Disaggregation - Analog/Benchmark

SEEM Disaggregation	SEEM Analog/Benchmark
• Not Applicable	Not Applicable

CM-9: Number of Defects in Production Releases (Type 6 CR)

Definition

Measures the number of defects in Production Releases. This measure will be presented as the number of Type 6 Severity 1 defects, the number of Type 6 Severity 2 defects without a mechanized work around, and the number of Type 6 Severity 3 defects resulting within a three week period from a Production Release date. The definition of Type 6 Change Requests (CR) and Severity 1, Severity 2, and Severity 3 defects can be found in the Change Control Process Document.

Exclusions

None

Business Rules

This metric measures the number of Type 6 Severity 1 defects, the number of Type 6 Severity 2 defects without a mechanized work around, and the number of Type 6 Severity 3 defects resulting within a three week period from a Production Release date. The definitions of Type 6 Change Requests (CR) and Severity 1, 2, and 3 defects can be found in the Change Control Process, which can be found at http://www.interconnection.bellsouth.com/markets/lec/ccp_live/index.html.

Calculation

The number of Type 6 Severity 1 Defects, the number of Type 6 Severity 2 Defects without a mechanized work around, and the number of Type 6 Severity 3 defects.

Report Structure

- Production Releases
- Number of Type 6 Severity 1 defects
- Number of Type 6 Severity 2 defects without a mechanized work around
- Number of Type 6 Severity 3 defects

Data Retained

- Region
- Report Period
- Production Releases
- Number of Type 6 Severity 1 defects
- Number of Type 6 Severity 2 defects without a mechanized work around
- Number of Type 6 Severity 3 defects

SQM Level of Disaggregation - Analog/Benchmark

SQM Level of Disaggregation	SQM Analog/Benchmark
Region—Number of Type 6 Severity 1 Defects	0 Defects
Region—Number of Type 6 Severity 2 Defects	0 Defects without a mechanized work around
Region—Number of Type 6 Severity 3 Defects	0 Defects

SEEM Measure

SEEM	Tier I	Tier II
No		

SEEM Disaggregation	SEEM Analog/Benchmark
• Not Applicable	Not Applicable

CM-10: Software Validation

Definition

Measures software validation test results for Production Releases of BellSouth Local Interfaces.

Exclusions

None

Business Rules

BellSouth maintains a test deck of transactions that are used to validate that functionality in software Production Releases work as designed. Each transaction in the test deck is assigned a weight factor, which is based on the weights that have been assigned to the metrics. Within the software validation metric weight factors will be allocated among transaction types (e.g., Pre-Order, Order Resale, Order UNE, Order UNE-P) and then equally distributed across transactions within the specific type.

BellSouth will begin to execute the software validation test deck within one (1) business day following a Production Release. Test deck transactions will be executed using Production Release software in the CAVE environment. Within seven (7) business days following completion of the Production Release software validation test in CAVE, BellSouth will report the number of test deck transactions that failed. Each failed transaction will be multiplied by the transaction's weight factor.

A transaction is considered failed if the request cannot be submitted or processed, or results in incorrect or improperly formatted data.

The test deck scenario weight table can be found in the Change Control Process, a copy of which can be found at http://www.interconnection.bellsouth.com/markets/lec/ccp_live/index.html.

Calculation

This software validation metric is defined as the ratio of the sum of the weights of failed transactions using Production Release software in CAVE to the sum of the weights of all transactions in the test deck.

- Numerator = Sum of weights of failed transactions
- Denominator = Sum of weights of all transactions in the test deck

Report Structure

- BellSouth Aggregate

Data Retained

- Report Period
- Production Release Number
- Test Deck Weights
- % Test Deck Weight Failure

SQM Level of Disaggregation - Analog/Benchmark

SQM Level of Disaggregation	SQM Analog/Benchmark
• Region	<= 5%

SEEM Measure

SEEM	Tier I	Tier II
No		

SEEM Disaggregation	SEEM Analog/Benchmark
• Not Applicable	Not Applicable

CM-11: Percent of Change Requests Implemented within 60 Weeks of Prioritization

Definition

Measures whether BellSouth provides CLECs timely implementation of prioritized change requests.

Exclusions

- Change requests that are implemented later than 60 weeks with the consent of the CLECs
- Change requests for which BellSouth has regulatory authority to exceed the interval

Business Rules

This metric is designed to measure BellSouth's monthly performance in implementing prioritized change requests. The clock starts when a change request has first been prioritized as described in the Change Control Process. The clock stops when the change request has been implemented by BellSouth and made available to the CLECs. BellSouth will begin reporting this monthly measure with the next release for diagnostic purposes, and will be measured for SEEM purposes 60 weeks from first prioritization meeting following Commission approval of this measure.

Calculation

Percent of Type 5 CLEC initiated Change Requests implemented on time = (a / b) X 100

- a = Total number of prioritized Type 5 Change Requests implemented each month that are less than or equal to 60 weeks of age from the date of their first prioritization plus all other prioritized change requests existing at the end of the month that are less than or equal to 60 weeks of age from prioritization.

- b = All entries in "a" above plus all Type 5 Change Requests prioritized more than 60 weeks before the end of the monthly reporting period.

Percent of Type 4 BellSouth initiated Change Requests implemented on time = (a / b) X 100

- a = Total number of prioritized Type 4 Change Requests implemented each month that are less than or equal to 60 weeks of age from the date of the release prioritization list plus all other Type 4 prioritized change requests existing at the end of the month that are less than or equal to 60 weeks of age from prioritization.

- b = All entries in "a" above plus all Type 4 Change Requests prioritized more than 60 weeks before the end of the monthly reporting period.

Report Structure

- BellSouth Aggregate
- Type 4 requests implemented
- Type 5 requests implemented
- % implemented within 16, 32, 48, and 60 weeks

Data Retained

- Region
- Report Month
- Total implemented by type
- Total implemented within 60 weeks

SQM Level of Disaggregation - Analog/Benchmark

SQM Level of Disaggregation	SQM Analog/Benchmark
• Region	95% within interval
• Type 4 requests implemented	95% within interval
• Type 5 requests implemented	95% within interval

SEEM Measure

SEEM	Tier I	Tier II	Tier III
Yes		X	

SEEM Disaggregation	SEEM Analog/Benchmark
• Region	95% within interval

Appendix A: Reporting Scope

A-1: Standard Service Groupings

See individual reports in the body of the SQM.

A-2: Standard Service Order Activities

These are the generic BellSouth/CLEC service order activities which are included in the Pre-Ordering, Ordering, and Provisioning sections of this document. It is not meant to indicate specific reporting categories.

Service Order Activity Types

- Service Migrations Without Changes
- Service Migrations With Changes
- Move and Change Activities
- Service Disconnects (Unless noted otherwise)
- New Service Installations

Pre-Ordering Query Types

- Address
- Telephone Number
- Appointment Scheduling
- Customer Service Record
- Feature Availability
- Service Inquiry

Maintenance Query Types

TAFI - TAFI queries the systems below

- CRIS
- March
- Predictor
- LMOS
  - DLR
  - DLETH
  - LMOSupd
- LNP
- NIW
- OSPCM
- SOCS

Report Levels

- CLEC RESH
- CLEC State
- CLEC Region
- Aggregate CLEC State
- Aggregate CLEC Region
- BellSouth State
- BellSouth Region

Appendix B: Glossary of Acronyms and Terms

Symbols used in calculations

Σ
A mathematical symbol representing the sum of a series of values following the symbol.

-
A mathematical operator representing subtraction.

+
A mathematical operator representing addition.

/
A mathematical operator representing division.

<
A mathematical symbol that indicates the metric on the left of the symbol is less than the metric on the right.

<=
A mathematical symbol that indicates the metric on the left of the symbol is less than or equal to the metric on the right.

>
A mathematical symbol that indicates the metric on the left of the symbol is greater than the metric on the right.

>=
A mathematical symbol that indicates the metric on the left of the symbol is greater than or equal to the metric on the right.

( )
Parentheses, used to group mathematical operations which are completed before operations outside the parentheses.

A

ACD
Automatic Call Distributor - A service that provides status monitoring of agents in a call center and routes high volume incoming telephone calls to available agents while collecting management information on both callers and attendants.

Aggregate
Sum total of all items in like category, e.g. CLEC aggregate equals the sum total of all CLECs' data for a given reporting level.

ALEC
Alternative Local Exchange Company = FL CLEC

ADSL
Asymmetrical Digital Subscriber Line

ASR
Access Service Request - A request for access service terminating delivery of carrier traffic into a Local Exchange Carrier's network.

ATLAS

Application for Telephone Number Load Administration System - The BellSouth Operations System used to administer the pool of available telephone numbers and to reserve selected numbers from the pool for use on pending service requests/service orders.

ATLASTN
ATLAS software contract for Telephone Number.

Auto Clarification
The number of LSRs that were electronically rejected from LESOG and electronically returned to the CLEC for correction.

B

BFR:
Bona Fied Request

BILLING
The process and functions by which billing data is collected and by which account information is processed in order to render accurate and timely billing.

BOCRIS
Business Office Customer Record Information System (Front-end to the CRIS database.)

BRI
Basic Rate ISDN

BRC
Business Repair Center – The BellSouth Business Systems trouble receipt center which serves large business and CLEC customers.

BellSouth
BellSouth Telecommunications, Inc.

C

CABS
Carrier Access Billing System

CCC
Coordinated Customer Conversions

CCP
Change Control Process

Centrex
A business telephone service, offered by local exchange carriers, which is similar to a Private Branch Exchange (PBX) but the switching equipment is located in the telephone company Central Office (CO).

CKTID
A unique identifier for elements combined in a service configuration

CLEC
Competitive Local Exchange Carrier

CLP
Competitive Local Provider = NC CLEC

CM
Change Management

CMDS
Centralized Message Distribution System - Telcordia administered national system used to transfer specially formatted messages among companies.

COFFI
Central Office Feature File Interface - Provides information about USOCs and class of service. COFFI is a part of DOE/SONGS. It indicates all services available to a customer.

CRIS
Customer Record Information System - This system is used to retain customer information and render bills for telecommunications service.

CRSACCTS
CRIS software contract for CSR information

CRSG
Complex Resale Support Group

C-SOTS
CLEC Service Order Tracking System

CSR
Customer Service Record

CTTG
Common Transport Trunk Group - Final trunk groups between BellSouth & Independent end offices and the BellSouth access tandems.

D

DA
Directory Assistance

DESIGN
Design Service is defined as any Special or Plain Old Telephone Service Order which requires BellSouth Design Engineering Activities.

DISPOSITION & CAUSE
Types of trouble conditions, e.g. No Trouble Found, Central Office Equipment, Customer Premises Equipment, etc.

DLETH
Display Lengthy Trouble History - A history report that gives all activity on a line record for trouble reports in LMOS.

DLR
Detail Line Record - A report that gives detailed line record information on records maintained in LMOS

DS-0
The worldwide standard speed for one digital voice signal (64000 bps).

DS-1
24 DS-0s (1.544Mb/sec., i.e. carrier systems)

DOE
Direct Order Entry System - An internal BellSouth service order entry system used by BellSouth Service Representatives to input business service orders in BellSouth format.

DSAP
DOE (Direct Order Entry) Support Application - The BellSouth Operations System which assists a Service Representative or similar carrier agent in negotiating service provisioning commitments for non-designed services and Unbundled Network Elements.

DSAPDDI
DSAP software contract for schedule information.

DSL
Digital Subscriber Line

DUI
Database Update Information

E

E911
Provides callers access to the applicable emergency services bureau by dialing a 3-digit universal telephone number.

EDI
Electronic Data Interchange - The computer-to-computer exchange of inter and/or intra-company business documents in a public standard format.

ESSX
BellSouth Centrex Service

F G

Fatal Reject
The number of LSRs that were electronically rejected from LEO, which checks to see of the LSR has all the required fields correctly populated.

Flow-Through
In the context of this document, LSRs submitted electronically via the CLEC mechanized ordering process that flow through to the BellSouth OSS without manual or human intervention.

FOC
Firm Order Confirmation - A notification returned to the CLEC confirming that the LSR has been received and accepted, including the specified commitment date.

FX
Foreign Exchange

H

HAL
“Hands Off” Assignment Logic - Front end access and error resolution logic used in interfacing BellSouth Operations Systems such as ATLAS, BOCRIS, LMOS, PSIMS, RSAG and SOCS.

HALCRIS
HAL software contract for CSR information

HDSL
High Density Subscriber Loop/Line

I J K

ILEC
Incumbent Local Exchange Company

INP
Interim Number Portability

ISDN
Integrated Services Digital Network

IPC
Interconnection Purchasing Center

L

LAN
Local Area Network

LAUTO
The automatic processor in the LNP Gateway that validates LSRs and issues service orders.

LCSC
Local Carrier Service Center - The BellSouth center which is dedicated to handling CLEC LSRs, ASRs, and Preordering transactions along with associated expedite requests and escalations.

Legacy System
Term used to refer to BellSouth Operations Support Systems (see OSS)

LENS
Local Exchange Negotiation System - The BellSouth LAN/web server/OS application developed to provide both preordering and ordering electronic interface functions for CLECs.

LEO
Local Exchange Ordering - A BellSouth system which accepts the output of EDI, applies edit and formatting checks, and reformats the Local Service Requests in BellSouth Service Order format.

LERG
Local Exchange Routing Guide

LESOG
Local Exchange Service Order Generator - A BellSouth system which accepts the service order output of LEO and enters the Service Order into the Service Order Control System using terminal emulation technology.

LFACS
Loop Facilities Assessment and Control System

LIDB
Line Information Database

LMOS
Loop Maintenance Operations System - A system that provides a mechanized means of maintaining customer line records and for entering, processing, and tracking trouble reports.

LMOS HOST

LMOS host computer

LMOSupd
LMOS update allows trouble tickets on line records to be entered into LMOS.

LMU
Loop Make-up

LMUS
Loop Make-up Service Inquiry

LNP
Local Number Portability - In the context of this document, the capability for a subscriber to retain his current telephone number as he transfers to a different local service provider.

LNP Gateway
Local Number Portability (gateway)- A system that provides both internal and external communications with various interfaces and process including:

(1). Linking BellSouth to the Number Portability Administration Center (NPAC).

(2). Allowing for inter-company communications between BellSouth and the CLECs for electronic ordering.

(3). Providing interface between NPAC and AIN SMS for LNP routing processes.

LOOPS
Transmission paths from the central office to the customer premises.

LRN
Location Routing Number

LSR
Local Service Request – A request for local resale service or unbundled network elements from a CLEC.

M

Maintenance & Repair
The process and function by which trouble reports are passed to BellSouth and by which the related service problems are resolved.

MARCH
A memory administration system that translates line-related service order data into switch provisioning messages and automatically transmits the messages to targeted stored program control system switches.

N

NBR
New Business Request

NC
“No Circuits” - All circuits busy announcement.

NIW
Network Information Warehouse - A system that stores central office blockage data for use in processing trouble reports.

NMLI
Native Mode LAN Interconnection

NPA
Numbering Plan Area

NXX
The "exchange" portion of a telephone number.

O

OASIS
Obtain Availability Services Information System - A BellSouth front-end processor, which acts as an interface between COFFI and RNS. This system takes the USOCs in COFFI and translates them to English for display in RNS.

OASISBSN
OASIS software contract for feature/service

OASISNET
OASIS software contract for feature/service

OASISOCP
OASIS software contract for feature/service

ORDERING
The process and functions by which resale services or unbundled network elements are ordered from BellSouth as well as the process by which an LSR or ASR is placed with BellSouth.

Order Types
The following order types are used in this document:

(1). T - The "to" portion of a change of address. This Order Type is used to connect main service at a new address when a customer moves from one address to another in any of the nine states within the BellSouth region. A "T" Order Type is always pared with an "F" Order Type which will have the same telephone number following the "F" Order Type Code unless the orders are within different states.

(2). N - Orders establishing a new account. Also, this Order Type Code is occasionally used when changing from one type of system to another such as when changing from PBX to Centrex.

(3). C - Order Type used for the following conditions: changes or partial connections or disconnections of service or equipment; change of telephone number, grade or class of main line, additional lines, auxiliary lines, PBX trunks and stations; addition of trunks or lines to existing accounts; move of equipment (other than change of address); temporary suspension and restoration of service at customer's request.

(4). R - Order Type used for the following conditions: additions, removals or changes in directory listings; responsibility change orders, addition, removal or changes in directory and billing information; other record corrections where no "field work" is involved.

OSPCM
Outside Plant Contract Management System - A system that provides scheduling and completion information on outside plant construction activities.

OSS
Operations Support System - A support system or database which is used to mechanize the flow or performance of work. The term is used to refer to the overall system consisting of hardware complex, computer operating system(s), and

application which is used to provide the support functions.

OUT OF SERVICE
Customer has no dial tone and cannot call out.

P Q

PMAP
Performance Measurement Analysis Platform

PON
Purchase Order Number

POTS
Plain Old Telephone Service

PREDICTOR
A system which is used to administer proactive maintenance and rehabilitation activities on outside plant facilities, provide access to selected work groups to Mechanized Loop Testing and switching system I/O ports.

Preordering
The process and functions by which vital information is obtained, verified, or validated prior to placing a service request.

PRI
Primary Rate ISDN

Provisioning
The process and functions by which necessary work is performed to activate a service requested via an LSR or ASR and to initiate the proper billing and accounting functions.

PSIMS
Product/Service Inventory Management System - A BellSouth database Operations System which contains availability information on switching system features and capabilities and on BellSouth service availability. This database is used to verify the availability of a feature or service in an NXX prior to making a commitment to the customer.

PSIMSORB
PSIMS software contract for feature/service.

R

RNS
Regional Negotiation System - An internal BellSouth service order entry system used by BellSouth Consumer Services to input service orders in BellSouth format.

ROS
Regional Ordering System

RRC
Residence Repair Center - The BellSouth Consumer Services trouble receipt center which serves residential customers.

RSAG
Regional Street Address Guide - The BellSouth database, which contains street addresses validated to be accurate with state and local governments.

RSAGADDR
RSAG software contract for address search.

RSAGTN
RSAG software contract for telephone number search.

S

SAC
Service Advocacy Center

SEEM
Self Effectuating Enforcement Mechanism

SOCS
Service Order Control System - A system which routes service order images among BellSouth drop points and BellSouth OSS during the service provisioning process.

SOIR
Service Order Interface Record - any change effecting activity to a customer account by service order that impacts 911/E911

SONGS
Service Order Negotiation and Generation System.

Syntactically Incorrect Query
A query that cannot be fulfilled due to insufficient or incorrect input data from the end user. For example, A CLEC would like to query the legacy system for the following address: 1234 Main ST. Entering "1234 Main ST" will be considered syntactically correct because valid characters were used in the address field. However, entering "AB34 Main ST" will be considered syntactically incorrect because invalid characters (i.e., alpha characters were entered in numeric slots) were used in the address field.

T

TAFI
Trouble Analysis Facilitation Interface - The BellSouth Operations System that supports trouble receipt center personnel in taking and handling customer trouble reports.

TAG
Telecommunications Access Gateway – TAG was designed to provide an electronic interface, or machine-to-machine interface for the bi-directional flow of information between BellSouth's OSSs and participating CLECs.

TN
Telephone Number

Total Manual Fallout
The number of LSRs which are entered electronically but require manual entering into a service order generator.

U V

UNE
Unbundled Network Element

UCL
Unbundled Copper Link

USOC
Universal Service Order Code

W X Y Z

WATS
Wide Area Telephone Service

WFA
Work Force Administration

WMC
Work Management Center

WTN
Working Telephone Number.

Appendix C: BellSouth Audit Policy

C-1: BellSouth's Internal Audit Policy

BellSouth's internal efforts to make certain that the reports produced by the PMAP platform are of the highest accuracy has been formalized into a Performance Measurements Quality Assurance Plan (PMQAP) that documents and augments existing quality assurance processes integral to the production and validation of Performance Measurements data.

The plan consists of three sections:

1. Change Control addresses the quality assurance steps involved in the introduction of new measurements and changes to existing measurements.
2. Production addresses the quality assurance steps used to create monthly SQM reports.
3. Monthly Validation addresses the quality assurance steps used to ensure accurate posting of monthly results.

The BellSouth PMQAP will ensure that BellSouth effectively and consistently provides accurate performance measurements data for the activities included in the SQM. The BellSouth Internal Audit department will audit this plan and its quality assurance steps annually, beginning in 4Q01.

C-2: BellSouth's External Audit Policy

BellSouth currently provides many CLECs with audit rights as a part of their individual interconnection agreements. BellSouth has developed a proposed Audit Plan for use by the parties to an audit. If requested by a Public Service Commission or by a CLEC exercising contractual audit rights, BellSouth will agree to undergo a comprehensive audit of the current year aggregate level reports for both BellSouth and the CLECs for each of the next five (5) years (2001 - 2005), to be conducted by an independent third party auditor jointly selected by BellSouth and the CLEC. The results of audits will be made available to all the parties subject to proper safeguards to protect proprietary information. Requested audits include the following specifications:

1. The cost shall be borne by BellSouth.
2. The independent third party auditor shall be selected with input from BellSouth, the PSC, if applicable, and the CLEC(s).
3. BellSouth, the PSC and the CLECs shall jointly determine the scope of the audit.

These comprehensive audits are intended to provide the basis for the PSCs and CLECs to determine that the SQM, PMAP and SEEM produce accurate data that reflects each States Order for performance measurements. Once this has been verified by an initial audit, the BellSouth PMQAP will provide the basis for future audits.

Appendix D: OSS Tables

OSS-1: Average Response Interval and Percent Within Interval (Pre-Ordering/Ordering)

Table 1: Legacy System Access Times For RNS

System	Contract	Data	< 2.3 sec.	> 6 sec.	<= 6.3 sec.	Avg. Sec.	# of Calls
RSAG	RSAG-TN	Address	x	x	x	x	x
RSAG	RSAG-ADDR	Address	x	x	x	x	x
ATLAS	ATLAS-TN	TN	x	x	x	x	x
DSAP	DSAP-DDI	Schedule	x	x	x	x	x
CRIS	CRSACCTS	CSR	x	x	x	x	x
OASIS	OASISBIG	Feature/Service	x	x	x	x	x

Table 2: Legacy System Access Times For R0S

System	Contract	Data	< 2.3 sec.	> 6 sec.	<= 6.3 sec.	Avg. sec.	# of Calls
RSAG	RSAG-TN	Address	x	x	x	x	x
RSAG	RSAG-ADDR	Address	x	x	x	x	x
ATLAS	ATLAS-TN	TN	x	x	x	x	x
DSAP	DSAP-DDI	Schedule	x	x	x	x	x
CRIS	CRSOCSR	CSR	x	x	x	x	x
OASIS	OASISBIG	Feature/Service	x	x	x	x	x

Table 3: Legacy System Access Times For LENS

System	Contract	Data	< 2.3 sec.	> 6 sec.	<= 6.3 sec.	Avg. sec.	# of Calls
RSAG	RSAG-TN	Address	x	x	x	x	x
RSAG	RSAG-ADDR	Address	x	x	x	x	x
ATLAS	ATLAS-TN	TN	x	x	x	x	x
DSAP	DSAP	Schedule	x	x	x	x	x
CRIS	CRSECSRL	CSR	x	x	x	x	x
COFFI	COFFI/USOC	Feature/Service	x	x	x	x	x
P/SIMS	PSIMS/ORB	Feature/Service	x	x	x	x	x

Table 4: Legacy System Access Times For TAG

System	Contract	Data	< 2.3 sec.	> 6 sec.	<= 6.3 sec.	Avg. sec.	# of Calls
RSAG	RSAG-TN	Address	x	x	x	x	x
RSAG	RSAG-ADDR	Address	x	x	x	x	x
ATLAS	ATLAS-TN	TN	x	x	x	x	x
ATLAS	ATLAS-MLH	TN	x	x	x	x	x
ATLAS	ATLAS-DID	TN	x	x	x	x	x
DSAP	DSAP-DDI	Schedule	x	x	x	x	x
CRIS	TAG-CSR	CSR	x	x	x	x	x
P/SIMS	PSIM/ORB	Feature/Service	x	x	x	x	x

OSS-1: Average Response Interval and Percent Within Interval (Pre-Ordering/Ordering)

SEEM OSS Legacy System

System	BellSouth	CLEC
Telephone Number/Address		
RSAG-ADDR	RNS, ROS	TAG, LENS
RSAG-TN	RNS, ROS	TAG, LENS
Atlas	RNS,ROS	TAG. LENS
Appointment Scheduling		
DSAP	RNS, ROS	TAG, LENS
CSR Data		
CRSACCTS	RNS	
CRSOCSR	ROS	
CRSECSRL		LENS
TAG-CSR		TAG
Service/Feature Availability		
OASISBIG	RNS, ROS	
PSIMS/ORB, COFFI		LENS, TAG

OSS-2: OSS Availability (Pre-Ordering/Ordering)

OSS Availability

OSS Interface	Applicable to	% Availability
EDI	CLEC	x
LENS	CLEC	x
LEO	CLEC	x
LESOG	CLEC	x
PSIMS	CLEC	x
TAG	CLEC	x
LNP Gateway	CLEC	x
COG	CLEC	x
SOG	CLEC	x

DOM	CLEC	x
DOE	CLEC/BellSouth	x
CRIS	CLEC/BellSouth	x
ATLAS/COFFI	CLEC/BellSouth	x
BOCRIS	CLEC/BellSouth	x
DSAP	CLEC/BellSouth	x
RSAG	CLEC/BellSouth	x
SOCS	CLEC/BellSouth	x
SONGS	CLEC/BellSouth	x
RNS	BellSouth	x
ROS	BellSouth	x

OSS-2: OSS Availability (Pre-Ordering/Ordering)

SEEM OSS Availability

OSS Interface	Applicable to	% Availability
EDI	CLEC	x
LENS	CLEC	x
LEO	CLEC	x
LESOG	CLEC	x
PSIMS	CLEC	x
TAG	CLEC	x
LNP Gateway	CLEC	x
COG	CLEC	x
SOG	CLEC	x
DOM	CLEC	x

OSS-3: OSS Availability (Maintenance & Repair)

OSS Availability (M&R)

OSS Interface	% Availability
BellSouth TAFI	x
CLEC TAFI	x
CLEC ECTA	x
BellSouth & CLEC	
CRIS	x
LMOS HOST	x
LNP Gateway	x
MARCH	x
OSPCM	x
PREDICTOR	x
SOCS	x

OSS-3: OSS Availability (Maintenance & Repair)

SEEM OSS Availability (M&R)

OSS Interface	% Availability
CLEC TAFI	x
CLEC ECTA	x

OSS-4: Response Interval (Maintenance & Repair)

Legacy System Access Times for M&R

System	BellSouth & CLEC	Count <= 4	> 4 <= 10	<= 10	> 10	> 30	Avg. Int.
CRIS	x	x	x	x	x	x	x
DLETH	x	x	x	x	x	x	x
DLR	x	x	x	x	x	x	x
LMOS	x	x	x	x	x	x	x
LMOSupd	x	x	x	x	x	x	x
LNP	x	x	x	x	x	x	x
MARCH	x	x	x	x	x	x	x
OSPCM	x	x	x	x	x	x	x
Predictor	x	x	x	x	x	x	x
SOCS	x	x	x	x	x	x	x
NIW	x	x	x	x	x	x	x

TAFI

System	Open Trouble Ticket	Status Trouble Ticket	Mechanized Line Testing	Close Trouble Ticket
CRIS	x			
DLETH	x			
DLR	x			
LMOS	x	x		x
LMOSSupd	x	x	x	x
LNP	x			
MARCH	x			
OSPCM	x	x		
Predictor	x	x		
SOCS	x	x		
NIW	x			

Note: Depending on the type of customer report multiple systems maybe touched in one transaction.

Product	PRODUCT TYPE	REQTYPE	ACT TYPE	F/T[3]	COMPLEX SERVICE	COMPLEX ORDER	PLANNED FALLOUT FOR MANUAL HANDLING[1]	EDI	TAG[2]	LENS[4]	COMMENTS
2 wire analog DID trunk port	U	F	N	No	UNE	Yes	NA	N	N	N	
2 wire analog port	U	F	N	No	UNE	No	Yes	Y	Y	Y	
2 wire ISDN digital line	U	A	N,T	No	UNE	Yes	NA	N	N	N	
2 wire ISDN digital loop	U	A	N,C,D	Yes	UNE	Yes	No	Y	Y	N	
2 wire ISDN digital loop - LNP	U	B	V,P,Q	Yes	UNE	Yes	No	Y	Y	N	
3 Way Calling	R,B	E,M	N,C,V,W,P,Q,T	Yes	No	No	No	Y	Y	Y	
3rd Party Call Block	R,B	E,M	N,C,V,W,D,P,Q,T	Yes	No	No	No	Y	Y	Y	
4 wire analog voice grade loop	U	A	T	No	UNE	Yes	Yes	Y	Y	N	
4 wire analog voice grade loop	U	A	N	Yes	UNE	Yes	No	Y	Y	N	
4 wire DS1 & PRI digital loop	U	A	N,T	No	UNE	Yes	NA	N	N	N	
4 wire DSO & PRI digital loop	U	A	N,T	No	UNE	Yes	NA	N	N	N	
4 wire ISDN DSI digital trunk ports	U	A	N,T	No	UNE	Yes	NA	N	N	N	
4-WIRE DS1 LOOP WITH CHANNELIZATION WITH PORT DS1	C	M	N,C,D,V	No	Yes	Yes	NA	N	N	N	
4-WIRE DS1 LOOP WITH CHANNELIZATION WITH PORT TRUNK SERVICE	C	M	N,C,D,V	No	Yes	Yes	NA	N	N	N	
900 Call Block	R,B	E,M	N,C,V,W,D,P,Q,T	Yes	No	No	No	Y	Y	Y	
Accupulse	C	E	N,C,T,V,W	No	Yes	Yes	NA	N	N	N	
ADSL	R,B,C	E	V,W,D	Yes	C/S	C/S	No	Y	Y	Y	NOTE THIS PRODUCT CAN BE ORDERED FOR RES/BUS AND CENTREX
Analog Data/Private Line	C	E	N,C,T,V,W,D	No	Yes	Yes	NA	N	N	N	
Area Plus	R,B	E,M	N,C,V,W,P,Q,T	Yes	No	No	No	Y	Y	Y	
ATM (ASYNCHRONOUS TRANFER MODE)	C	E	N,C,V,W,D	No	Yes	Yes	NA	N	N	N	
Basic Rate ISDN *Unbundled	U	A	T	No	Yes	Yes	Yes	Y	Y	N	
Basic Rate ISDN *Unbundled	U	A	N,V,D	Yes	UNE	Yes	No	Y	Y	Y	
Basic Rate ISDN *Unbundled	U	A	C,T	No	UNE	Yes	Yes	Y	Y	Y	
Basic Rate ISDN 2 Wire UNE P	C	M	N,C,D,V	No	Yes	Yes	NA	N	N	N	Manual
Basic Rate ISDN 2 Wire	C	E	N,C, D,T,V,P,Q	No	Yes	Yes	Yes	Y	Y	Y	

Product	PRODUCT TYPE	REQTYPE	ACT TYPE	F/T[3]	COMPLEX SERVICE	COMPLEX ORDER	PLANNED FALLOUT FOR MANUAL HANDLING[1]	EDI	TAG[2]	LENS[4]	COMMENTS
BELLSOUTH CHANNELIZED TRUNKS	C	E	N,C,D,T,V,W,P,Q	No	Yes	Yes	NA	N	N	N	
Call Block	R,B	E,M	N,C,V,W,P,Q,T	Yes	No	No	No	Y	Y	Y	
Call Forwarding	R,B	E,M	N,C,V,W,P,Q,T	Yes	No	No	No	Y	Y	Y	
Call Return	R,B	E,M	N,C,V,W,P,Q,T	Yes	No	No	No	Y	Y	Y	
Call Selector	R,B	E,M	N,C,V,W,P,Q,T	Yes	No	No	No	Y	Y	Y	
Call Tracing	R,B	E,M	N,C,V,W,P,Q,T	Yes	No	No	No	Y	Y	Y	
Call Waiting	R,B	E,M	N,C,V,W,P,Q,T	Yes	No	No	No	Y	Y	Y	
Call Waiting Deluxe	R,B	E,M	N,C,V,W,P,Q,T	Yes	No	No	No	Y	Y	Y	
Caller ID	R,B	E,M	N,C,V,W,P,Q,T	Yes	No	No	No	Y	Y	Y	
BELLSOUTH CENTREX*	C	P	N,C,D,W,T,S,B,L,V,P	No	Yes	Yes	NA	N	N	N	
UNE P CENTREX	C	M	N,C,D,V	No	Yes	Yes	NA	N	N	N	
Collect Call Block	R,B	E,M	N,C,V,W,D,P,Q,T	Yes	No	No	No	Y	Y	Y	
DID	C	N	N,C,D,V,W,T,P,Q	No	Yes	Yes	Yes	Y	Y	Y	
2-WIRE DIRECT INWARD DIAL (DID) TRUNK PORT AND VOICE GRADE LOOP COMBINATION	C	M	N,C,D,V	No	Yes	Yes	NA	N	N	N	
Digital Data Transport	U	E	N,C,T,V,W	No	UNE	Yes	NA	N	N	N	
DIGITAL DIRECT INTEGRATION TERMINATION SERVICES (DDITS) DS1	C	M	N,C,D,V	No	Yes	Yes	NA	N	N	N	
DIGITAL DIRECT INTEGRATION TERMINATION SERVICES (DDITS) TRUNK SERVICE	C	M	N,C,D,V	No	Yes	Yes	NA	N	N	N	
Directory Listing Indentions	B,U	B,C,E,F,J,M,N	N,C,T,R,V,W,P,Q	No	No	No	Yes	Y	Y	Y	
Directory Listings (simple)	R,B,U	B,C,E,F,J,M,N	N,C,R,V,W,P,Q	Yes	No	No	No	Y	Y	Y	
Directory Listings (simple)	R,B,U	B,C,E,F,J,M,N	T	No	No	No	Yes	Y	Y	N	
Directory Listings Captions	R,B,U	B,C,E,F,J,M,N	N,C,T,R,V,W,P,Q	No	No	Yes	Yes	Y	Y	Y	
DIFFERENT PREMISE ADDRESS (DPA)	C	E	N,C,D,V,W,T	No	Yes	Yes	NA	N	N	N	
DS1Loop	U	A	N,D,V	Yes	UNE	Yes	No	Y	Y	Y	
DS3	U	A	N,C,V	No	UNE	Yes	NA	N	N	N	
DSO Loop	U	A	N,D,V	Yes	UNE	Yes	No	Y	Y	Y	
DSO Loop	U	A	C,T	No	No	No	Yes	Y	Y	Y	
Enhanced Caller ID	R,B	E	C,D,N,V,W,P,Q,T	Yes	No	No	No	Y	Y	Y	

Product	PRODUCT TYPE	REQTYPE	ACT TYPE	F/T[3]	COMPLEX SERVICE	COMPLEX ORDER	PLANNED FALLOUT FOR MANUAL HANDLING[1]	EDI	TAG[2]	LENS[4]	COMMENTS
Enhanced Extended Links (EELS)	U	A	C,D,N,T,V	Yes	No	No	No	Y	Y	Y	
ESSX	C	P	C,D,T,V,S,B,W,L,P,Q	No	Yes	Yes	NA	N	N	N	
Flat Rate/Business	B	E, M	C,D,N,V,W,T Y,B,L,S,D,T,P,Q	Yes	No	No	No	Y	Y	Y	
Flat Rate/Residence	R	E, M	C,D,N,V,W,T Y,B,L,S,D,T,P,Q	Yes	No	No	No	Y	Y	Y	
FLEXSERV	C	E	N,C,D,T,V,W,P,Q	No	Yes	Yes	NA	N	N	N	
Frame Relay	C	E	N,C,D,V,W	No	Yes	Yes	NA	N	N	N	
FX/FCO	C	E	N,C,D,T,V,W,P,Q	No	Yes	Yes	NA	N	N	N	
UNE P FX/FCO (RES,BUS,PBX) (NOTE: THIS PRODUCT WILL NOT BE AVAILABLE UNTIL 08--01-02	C	M	N,C,V,D,T,S,B,L,W,Y,P,Q	No	Yes	Yes	NA	N	N	N	
Ga. Community Calling	R,B	M	C,D,N,V,W,P,Q	No	No	No	NA	N	N	N	
Ga. Community Calling	R,B	E	T	No	No	No	Yes	Y	Y	N	
HDSL	U	A	T	No	UNE	No	Yes	Y	Y	N	
HDSL	U	A	N,C,D,V	Yes	UNE	No	No	Y	Y	Y	
Hunting MLH	R,B	E, M	C,D,N,T,V,W	No	C/S[4]	C/S	Yes	Y	Y	N	
Hunting Series Completion	R,B	E, M	C,D,N,V,W	Yes	C/S	C/S	No	Y	Y	Y	
Hunting Series Completion	R,B	E, M	T	No	No	No	Yes	Y	Y	N	
INP to LNP Conversion	U	C	C	No	UNE	Yes	Yes	Y	Y	N	
LightGate	C	E	N,C,D,T,V,W,P,Q	No	Yes	Yes	NA	N	N	N	
Line Sharing	U	A	N,C,D,V,P,Q	Yes	UNE	No	No	Y	Y	Y	
Line Splitting	U	A	N,C,D	Yes	UNE	No	No	Y	Y	Y	
LNP With Complex Listing	U	C	P,V,Q	No	UNE	Yes	Yes	Y	Y	N	
LNP with Complex Services	U	C	P,V,Q	No	UNE	Yes	Yes	Y	Y	N	
LNP with Partial Migration	U	C	P,V,Q	No	UNE	Yes	Yes	Y	Y	N	
LNP	U	C	P,V,Q	Yes	UNE	Yes	No	Y	Y	N	
Local Number Portability (INP to LNP)	U	C	C	No	UNE	No	Yes	Y	Y	N	
INP	U	B,C	D	No	UNE	No	Yes	Y	Y	N	
Loop+LNP	U	B	V,P,Q	Yes	UNE	No	No	Y	Y	N	
Measured Rate/Bus	R,B	E,M	C,D,N,V,W,P,Q,T Y,B,L,S,D	Yes	No	No	No	Y	Y	Y	

Product	PRODUCT TYPE	REQTYPE	ACT TYPE	F/T[3]	COMPLEX SERVICE	COMPLEX ORDER	PLANNED FALLOUT FOR MANUAL HANDLING[1]	EDI	TAG[2]	LENS[4]	COMMENTS
Measured Rate/Res	R,B	E,M	C,D,N,V,W,P,Q,T Y,B,L,S,D	Yes	No	No	No	Y	Y	Y	
Megalink POINT TO POINT	C	E	N,V,W,T,D,C,P,Q	No	Yes	Yes	NA	N	N	N	
Megalink CHANNELIZED	C	E	N,V,W,T,D,C,P,Q	No	Yes	Yes	NA	N	N	N	
Memory Call	R,B	E, M	C,D,N,V,W,P,Q,T	Yes	No	No	No	Y	Y	Y	
Memory Call Ans. Svc.	R,B	E, M	C,D,N,V,W,P,Q,T	Yes	No	No	No	Y	Y	Y	
Multiserv	C	P	N,C,D,T,V,S,B,W,L,P,Q	No	Yes	Yes	NA	N	N	N	
Native Mode LAN Interconnection (NMLI)	C	E	N,C,D,V,W	No	Yes	Yes	NA	N	N	N	
Off-Prem Stations	C	E	N,C,D,V,W,T,P,Q	No	Yes	Yes	NA	N	N	N	
Optional Calling Plan	R,B	E, M	N,V,P,Q,W	Yes	No	No	No	Y	Y	Y	
Package/Complete Choice and Area Plus	R,B	E, M	N,C,V,W,P,Q	Yes	No	No	No	Y	Y	Y	
Package/Complete Choice and Area Plus	R,B	E, M	T	No	No	No	Yes	Y	Y	N	
Pathlink/ Primary Rate ISDN	C	E	N,C,D,T,V,W,P,Q	No	Yes	Yes	NA	N	N	N	
4-WIRE ISDN PRI UNE COMBO	C	M	N,C,D,V	No	Yes	Yes	NA	N	N	N	
Pay Phone Provider	B	E,M	C,D,T,N,V,W,P,Q	Yes	No	No	No	Y	Y	Y	
PBX Standalone Port	C	F	N,C,D	No	Yes	Yes	Yes	Y	Y	N	
PBX Trunks	C	E	N,C,D,V,W,T,P,Q	No	Yes	Yes	Yes	Y	Y	N	
PIC/LPIC Change	R,B,C	E,M	C,V,P,Q,T	Yes	No	No	No	Y	Y	Y	
PIC/LPIC Freeze	R,B,C	E,M	N,C,V,P,Q,T	Yes	No	No	No	Y	Y	Y	
PORT/LOOP COMBO 2-WIRE PBX	C	M	N,C,D,V	No	No	No	Yes	Y	Y	N	
Port/Loop Simple	U	M	N,C,D,V	Yes	No	No	No	Y	Y	Y	
Preferred Call Forward	R,B,U	E,M	C,D,N,V,W,P,Q,T	Yes	No	No	No	Y	Y	Y	
RCF Basic	R,B	E,M	N,D,W,V,P,Q,T	No	No	No	Yes	Y	Y	N	
Remote Access to CF	R,B	E,M	C,D,N,V,W,P,Q,T	No	No	No	NA	Y	Y	N	
Repeat Dialing	R,B	E,M	C,D,N,V,W,P,Q,T	Yes	No	No	No	Y	Y	Y	
Ringmaster	R,B	E,M	C,D,N,V,W,P,Q,T	Yes	No	No	No	Y	Y	Y	
Smartpath	R,B	E	C,D,T,N,V,W	No	Yes	Yes	NA	N	N	N	
SmartRING	C	E	N,D,C,V,W	No	Yes	Yes	NA	N	N	N	
Speed Calling	R,B	E,M	C,D,N,V,W,P,Q,T	Yes	No	No	No	Y	Y	Y	
Synchronet	C	E	N,D,C,V,W	No	Yes	Yes	Yes	Y	Y	N	
Three Way Call Block	R,B	E,M	C,D,N,V,W,P,Q,T	Yes	No	No	No	Y	Y	N	

Product	PRODUCT TYPE	REQTYPE	ACT TYPE	F/T[3]	COMPLEX SERVICE	COMPLEX ORDER	PLANNED FALLOUT FOR MANUAL HANDLING[1]	EDI	TAG[2]	LENS[4]	COMMENTS
Tie Lines	C	E	N,C,D,V,W,T,P,Q	No	Yes	Yes	NA	N	N	N	
TOLL FREE DIALING (TFD)	C	E	N,C,D,V,W	No	Yes	Yes	NA	N	N	N	
Touchtone	R,B	E	C,D,N,V,W,P,Q,T	Yes	No	No	No	Y	Y	Y	
Unbundled Loop-Analog 2W, SL1, SL2	U	A,B	D,N,V	Yes	UNE	No	No	Y	Y	Y	
Unbundled Loop-Analog 2W, SL1,SL2	U	A,B	C **	Yes	UNE	No	Yes	Y	Y	Y	
Unbundled Universal Digital Channel (UDC) Loop	U	A	N,D	Yes	UNE	No	No	Y	Y	Y	
WATS*	C	E	W,D,N,C,V	No	Yes	Yes	NA	N	N	N	
XDSL	U	A,B	N,C,V,D	Yes	UNE	No	No	Y	Y	Y	
XDSL	U	A,B	T	No	No	No	Yes	Y	Y	N	

Product: U-UNE; C-Complex; B-Business; R-Residence

Reqtype: A-Loop; B-Loop with LNP/INP; C-LNP/INP; E-Resale; F-Port; J-Directory Listing and Directory Assistance; M–UNE-P; N-DID Resale; P-Centrex Resale, ACT: N-New installation-; C-Change an existing account; D-Disconnection; T-Outside move of end user location; R-Record activity is for ordering administrative changes; V-Conversion of service to new LSP as specified; W-Conversion of service to new LSP "as is"; S-Suspend; B-Restore; Y-Deny; L-Seasonal Suspend; P-Partial Migration (initial); Q-Partial Migration (subsequent)

Note 1: Planned Fallout for Manual Handling denotes those services that are electronically submitted and are not intended to flow-through due to the complexity of the service.

Note 2: The TAG column includes thse LSRs submitted via Robo TAG.

Note 3: For all services that indicate 'No' for flow-through, the following reasons, in addition to complex services or complex order, also prompt manual handling: Expedites from CLECs, special pricing plans, partial migrations (although conversions-as-is flow through for issue 9 unless migrating the main TN and a new TN must be assigned), class of service invalid in certain states with some TOS e.g. government, or cannot be changed when changing main TN on C activity, pnding order review required (Example: Any pending service order (PSO) not related to current PON, pending service order (PSO) with multiple service orders pending realted to current PON and SUP received), more than 25 business lines and more than 15 loops, CSR inaccuracies such as invalid or missing CSR data in CRIS, Directory listings with Indentions or Captions, , transfer of calls option for CLEC end user – new TN not yet posted to CRIS.

Note 4: Services with C/S in the Complex Service and/or the Complex Order columns can be either complex or simple.

Note 5: The following list of items will not FT:

LSRs with Project or RPON fields populated

**SL1 REQTYP A, ACT C, LNA N, C, or D

**SL2 REQTYP A, ACT C, LNA C

REQTYP B, C, ACT P when migrating main telephone number

REQTYP B, C ACT V with Complex

REQTYP E, M, N and P; ACT = V, LNA = V (LNP to Resale/UNE Switched Combinations)

Attachment 10

BellSouth Disaster Recovery Plan

CONTENTS

PAGE

1.0	Purpose	2
2.0	Single Point of Contact	2
3.0	Identifying the Problem	2
3.1	Site Control	3
3.2	Environmental Concerns	4
4.0	The Emergency Control Center (ECC)	4
5.0	Recovery Procedures	5
5.1	CLEC Outage	5
5.2	BellSouth Outage	5
5.2.1	Loss of Central Office	6
5.2.2	Loss of a Central Office with Serving Wire Center Functions	6
5.2.3	Loss of a Central Office with Tandem Functions	6
5.2.4	Loss of a Facility Hub	7
5.3	Combined Outage (CLEC and BellSouth Equipment)	7
6.0	T1 Identification Procedures	7
7.0	Acronyms	8

1.0 PURPOSE

In the unlikely event of a disaster occurring that affects BellSouth's long-term ability to deliver traffic to a Competitive Local Exchange Carrier (CLEC), general procedures have been developed by BellSouth to hasten the recovery process in accordance with the Telecommunications Service Priority (TSP) Program established by the Federal Communications Commission to identify and prioritize telecommunication services that support national security or emergency preparedness (NS/EP) missions. A description of the TSP Program as it may be amended from time to time is available at the following website: http://interconnection.bellsouth.com/products/vertical/tsp.html. Since each location is different and could be affected by an assortment of potential problems, a detailed recovery plan is impractical. However, in the process of reviewing recovery activities for specific locations, some basic procedures emerge that appear to be common in most cases.

These general procedures should apply to any disaster that affects the delivery of traffic for an extended time period. Each CLEC will be given the same consideration during an outage, and service will be restored as quickly as possible.

This document will cover the basic recovery procedures that would apply to every CLEC.

2.0 SINGLE POINT OF CONTACT

When a problem is experienced, regardless of the severity, the BellSouth Network Management Center (NMC) will observe traffic anomalies and begin monitoring the situation. Controls will be appropriately applied to insure the sanity of BellSouth's network; and, in the event that a switch or facility node is lost, the NMC will attempt to circumvent the failure using available reroutes.

BellSouth's NMC will remain in control of the restoration efforts until the problem has been identified as being a long-term outage. At that time, the NMC will contact BellSouth's Emergency Control Center (ECC) and relinquish control of the recovery efforts. Even though the ECC may take charge of the situation, the NMC will continue to monitor the circumstances and restore traffic as soon as damaged network elements are revitalized.

The telephone number for the BellSouth Network Management Center in Atlanta, as published in Telcordia's National Network Management Directory, is 404-321-2516.

3.0 IDENTIFYING THE PROBLEM

During the early stages of problem detection, the NMC will be able to tell which CLECs are affected by the catastrophe. Further analysis and/or first hand observation will determine if the disaster has affected CLEC equipment only, BellSouth equipment only or a combination. The initial restoration activity will be largely determined by the equipment that is affected.

Once the nature of the disaster is determined and after verifying the cause of the problem, the NMC will initiate reroutes and/or transfers that are jointly agreed upon by the affected CLECs' Network Management Center and the BellSouth NMC. The type and percentage of controls used will depend upon available network capacity. Controls necessary to stabilize the situation will be invoked and the NMC will attempt to re-establish as much traffic as possible.

For long-term outages, recovery efforts will be coordinated by the Emergency Control Center (ECC). Traffic controls will continue to be applied by the NMC until facilities are re-established. As equipment is made available for service, the ECC will instruct the NMC to begin removing the controls and allow traffic to resume.

3.1 SITE CONTROL

In the total loss of building use scenario, what likely exists will be a smoking pile of rubble. This rubble will contain many components that could be dangerous. It could also contain any personnel on the premises at the time of the disaster. For these reasons, the local fire marshal with the assistance of the police will control the site until the building is no longer a threat to surrounding properties and the companies have secured the site from the general public.

During this time, the majority owner of the building should be arranging for a demolition contractor to mobilize to the site with the primary objective of reaching the cable entrance facility for a damage assessment. The results of this assessment would then dictate immediate plans for restoration, both short term and permanent.

In a less catastrophic event, i.e., the building is still standing and the cable entrance facility is usable, the situation is more complex. The site will initially be controlled by local authorities until the threat to adjacent property has diminished. Once the site is returned to the control of the companies, the following events should occur.

An initial assessment of the main building infrastructure systems (mechanical, electrical, fire and life safety, elevators, and others) will establish building needs. Once these needs are determined, the majority owner should lead the building restoration efforts. There may be situations where the site will not be totally restored within the confines of the building. The companies must individually determine their needs and jointly assess the cost of permanent restoration to determine the overall plan of action.

Multiple restoration trailers from each company will result in the need for designated space and installation order. This layout and control is required to maximize the amount of restoration equipment that can be placed at the site, and the priority of placements.

Care must be taken in this planning to ensure other restoration efforts have logistical access to the building. Major components of telephone and building equipment will need to be removed and replaced. A priority for this equipment must also be jointly established to facilitate overall site restoration. (Example: If the AC switchgear has sustained damage, this would be of the highest priority in order to regain power, lighting, and HVAC throughout the building.)

If the site will not accommodate the required restoration equipment, the companies would then need to quickly arrange with local authorities for street closures, rights of way or other possible options available.

3.2 ENVIRONMENTAL CONCERNS

In the worse case scenario, many environmental concerns must be addressed. Along with the police and fire marshal, the state environmental protection department will be on site to monitor the situation.

Items to be concerned with in a large central office building could include:

1. Emergency engine fuel supply. Damage to the standby equipment and the fuel handling equipment could have created "spill" conditions that have to be handled within state and federal regulations.

2. Asbestos-containing materials that may be spread throughout the wreckage. Asbestos could be in many components of building, electrical, mechanical, outside plant distribution, and telephone systems.

3. Lead and acid. These materials could be present in potentially large quantities depending upon the extent of damage to the power room.

4. Mercury and other regulated compounds resident in telephone equipment.

5. Other compounds produced by the fire or heat.

Once a total loss event occurs at a large site, local authorities will control immediate clean up (water placed on the wreckage by the fire department) and site access.

At some point, the companies will become involved with local authorities in the overall planning associated with site clean up and restoration. Depending on the clean up approach taken, delays in the restoration of several hours to several days may occur.

In a less severe disaster, items listed above are more defined and can be addressed individually depending on the damage.

In each case, the majority owner should coordinate building and environmental restoration as well as maintain proper planning and site control.

4.0 THE EMERGENCY CONTROL CENTER (ECC)

The ECC is located in the Midtown 1 Building in Atlanta, Georgia. During an emergency, the ECC staff will convene a group of pre-selected experts to inventory the damage and initiate corrective actions. These experts have regional access to BellSouth's personnel and equipment and will assume control of the restoration activity anywhere in the nine-state area.

In the past, the ECC has been involved with restoration activities resulting from hurricanes, ice storms and floods. They have demonstrated their capabilities during these calamities as well as

during outages caused by human error or equipment failures. This group has an excellent record of restoring service as quickly as possible.

During a major disaster, the ECC may move emergency equipment to the affected location, direct recovery efforts of local personnel and coordinate service restoration activities with the CLECs. The ECC will attempt to restore service as quickly as possible using whatever means is available, leaving permanent solutions, such as the replacement of damaged buildings or equipment, for local personnel to administer.

Part of the ECC's responsibility, after temporary equipment is in place, is to support the NMC efforts to return service to the CLECs. Once service has been restored, the ECC will return control of the network to normal operational organizations. Any long-term changes required after service is restored will be made in an orderly fashion and will be conducted as normal activity.

5.0 RECOVERY PROCEDURES

The nature and severity of any disaster will influence the recovery procedures. One crucial factor in determining how BellSouth will proceed with restoration is whether or not BellSouth's equipment is incapacitated. Regardless of whose equipment is out of service, BellSouth will move as quickly as possible to aid with service recovery; however, the approach that will be taken may differ depending upon the location of the problem.

5.1 CLEC OUTAGE

For a problem limited to one CLEC (or a building with multiple CLECs), BellSouth has several options available for restoring service quickly. For those CLECs that have agreements with other CLECs, BellSouth can immediately start directing traffic to a provisional CLEC for completion. This alternative is dependent upon BellSouth having concurrence from the affected CLECs.

Whether or not the affected CLECs have requested a traffic transfer to another CLEC will not impact BellSouth's resolve to re-establish traffic to the original destination as quickly as possible.

5.2 BELLSOUTH OUTAGE

Because BellSouth's equipment has varying degrees of impact on the service provided to the CLECs, restoring service from damaged BellSouth equipment is different. The outage will probably impact a number of Carriers simultaneously. However, the ECC will be able to initiate immediate actions to correct the problem.

A disaster involving any of BellSouth's equipment locations could impact the CLECs, some more than others. A disaster at a Central Office (CO) would only impact the delivery of traffic to and from that one location, but the incident could affect many Carriers. If the Central Office is a Serving Wire Center (SWC), then traffic from the entire area to those Carriers served from that switch would also be impacted. If the switch functions as an Access Tandem, or there is a tandem in the building, traffic from every CO to every CLEC could be interrupted. A disaster that destroys a facility hub could disrupt various traffic flows, even though the switching equipment may be unaffected.

The NMC would be the first group to observe a problem involving BellSouth's equipment. Shortly after a disaster, the NMC will begin applying controls and finding re-routes for the

completion of as much traffic as possible. These reroutes may involve delivering traffic to alternate Carriers upon receiving approval from the CLECs involved. In some cases, changes in translations will be required. If the outage is caused by the destruction of equipment, then the ECC will assume control of the restoration.

5.2.1 Loss of a Central Office

When BellSouth loses a Central Office, the ECC will

a) Place specialists and emergency equipment on notice;

b) Inventory the damage to determine what equipment and/or functions are lost;

c) Move containerized emergency equipment and facility equipment to the stricken area, if necessary;

d) Begin reconnecting service on a parity basis for Hospitals, Police and other emergency agencies or End Users served by BellSouth or CLEC in accordance with the TSP priority restoration coding scheme entered in the BellSouth Maintenance database immediately prior to the emergency.

5.2.2 Loss of a Central Office with Serving Wire Center Functions

The loss of a Central Office that also serves as a Serving Wire Center (SWC) will be restored as described in Section 5.2.1.

5.2.3 Loss of a Central Office with Tandem Functions

When BellSouth loses a Central Office building that serves as an Access Tandem and as a SWC, the ECC will

a) Place specialists and emergency equipment on notice;

b) Inventory the damage to determine what equipment and/or functions are lost;

c) Move containerized emergency equipment and facility equipment to the stricken area, if necessary;

d) Begin reconnecting service on a parity basis for Hospitals, Police and other emergency agencies or End Users served by BellSouth or CLEC in accordance with the TSP priority restoration coding scheme entered in the BellSouth Maintenance database immediately prior to the emergency;

e) Re-direct as much traffic as possible to the alternate access tandem (if available) for delivery to those CLECs utilizing a different location as a SWC;

f) Begin aggregating traffic to a location near the damaged building. From this location, begin re-establishing trunk groups to the CLECs for the delivery of traffic normally found on the direct trunk groups. (This aggregation point may be the alternate access tandem location or another CO on a primary facility route.)

5.2.4 Loss of a Facility Hub

In the event that BellSouth loses a facility hub, the recovery process is much the same as above. Once the NMC has observed the problem and administered the appropriate controls, the ECC will assume authority for the repairs. The recovery effort will include

a) Placing specialists and emergency equipment on notice;

b) Inventorying the damage to determine what equipment and/or functions are lost;

c) Moving containerized emergency equipment to the stricken area, if necessary;

d) Reconnecting service on a parity basis for Hospitals, Police and other emergency agencies or End Users served by BellSouth or CLEC in accordance with the TSP priority restoration coding scheme entered in the BellSouth Maintenance database immediately prior to the emergency; and

e) If necessary, BellSouth will aggregate the traffic at another location and build temporary facilities. This alternative would be viable for a location that is destroyed and building repairs are required.

5.3 COMBINED OUTAGE (CLEC AND BELLSOUTH EQUIPMENT)

In some instances, a disaster may impact BellSouth's equipment as well as the CLECs'. This situation will be handled in much the same way as described in Section 5.2.3. Since BellSouth and the CLECs will be utilizing temporary equipment, close coordination will be required.

6.0 T1 IDENTIFICATION PROCEDURES

During the restoration of service after a disaster, BellSouth may be forced to aggregate traffic for delivery to a CLEC. During this process, T1 traffic may be consolidated onto DS3s and may become unidentifiable to the Carrier. Because resources will be limited, BellSouth may be forced to "package" this traffic entirely differently than normally received by the CLECs. Therefore, a method for identifying the T1 traffic on the DS3s and providing the information to the Carriers is required.

7.0 ACRONYMS

CLEC	-	Competitive Local Exchange Carrier
CO	-	Central Office (BellSouth)
DS3	-	Facility that carries 28 T1s (672 circuits)
ECC	-	Emergency Control Center (BellSouth)
NMC	-	Network Management Center
SWC	-	Serving Wire Center (BellSouth switch)
T1	-	Facility that carries 24 circuits
TSP	-	Telecommunications Service Priority

Hurricane Information

During a hurricane, BellSouth will make every effort to keep CLECs updated on the status of our network. Information centers will be set up throughout BellSouth Telecommunications. These centers are not intended to be used for escalations, but rather to keep the CLEC informed of network related issues, area damages and dispatch conditions, etc.

Hurricane-related information can also be found on line at http://www.interconnection.bellsouth.com/network/disaster/dis_resp.htm. Information concerning Mechanized Disaster Reports can also be found at this website by clicking on CURRENT MDR REPORTS or by going directly to http://www.interconnection.bellsouth.com/network/disaster/mdrs.htm.

BST Disaster Management Plan

BellSouth maintenance centers have geographical and redundant communication capabilities. In the event of a disaster removing any maintenance center from service another geographical center would assume maintenance responsibilities. The contact numbers will not change and the transfer will be transparent to the CLEC.

Attachment 11

Bona Fide Request and New Business Request Process

BONA FIDE REQUEST AND NEW BUSINESS REQUEST PROCESS

1. BONA FIDE REQUEST

1.1 The Parties agree that Neutral Tandem is entitled to order any Network Element, interconnection option or service option required to be made available by FCC or Commission requirements pursuant to the Act. A Bona Fide Request (BFR) is to be used when Neutral Tandem makes a request of BellSouth to provide a new or modified Network Element, interconnection option or other service option pursuant to the Act that was not previously provided for in this Agreement.

1.2 A BFR shall be submitted in writing by Neutral Tandem and shall specifically identify the requested service date, technical requirements, space requirements and/or such other specifications that clearly define the request such that BellSouth has sufficient information to analyze and prepare a response. Such a request shall also include Neutral Tandem's designation of the request as being pursuant to the Telecommunications Act of 1996 (i.e. a BFR). The request shall be sent to Neutral Tandem's designated BellSouth Sales contact or Local Contract Manager (LCM).

1.3 Within two (2) business days of receipt of a BFR, BellSouth shall acknowledge in writing its receipt and identify a single point of contact responsible for responding to the BFR and shall request any additional information needed to process the request to the extent known at that time. Notwithstanding the foregoing, BellSouth may reasonably request additional information from Neutral Tandem at any time during the processing of the BFR.

1.4 Within thirty (30) business days of BellSouth's receipt of the BFR, if the preliminary analysis of the requested BFR is not of such complexity that it will cause BellSouth to expend extraordinary resources to evaluate the BFR, BellSouth shall respond to Neutral Tandem by providing a preliminary analysis of the new or modified Network Element or interconnection option not ordered by the FCC or Commission that is the subject of the BFR. The preliminary analysis shall either confirm that BellSouth will offer access to the new or modified Network Element, interconnection option or service option or confirm that BellSouth will not offer the new or modified Network Element, interconnection option or service option.

1.5 For any new or modified Network Element, interconnection option or service option not ordered by the FCC or Commission, if the preliminary analysis states that BellSouth will offer the new or modified Network Element, interconnection option or service option, the preliminary analysis

will include an estimate of the costs of utilizing existing resources, both personnel and systems, in the development including, but not limited to, request parameters analysis, determination of impacted BellSouth departments, determination of required resources, project management resources, etc. (Development Rate) including a general breakdown of such costs associated with the Network Element, interconnection option or service option and the date the request can be met. If the preliminary analysis states that BellSouth will not offer the new or modified Network Element, interconnection option or service option, BellSouth will provide an explanation of why the request is not technically feasible, does not qualify as a BFR for the new or modified Network Element, interconnection option or service option, should actually be submitted as a NBR or is otherwise not required to be provided under the Act. If BellSouth cannot provide the Network Element, interconnection option or service option by the requested date, BellSouth shall provide an alternative proposed date together with a detailed explanation as to why BellSouth is not able to meet Neutral Tandem's requested date.

1.6 For any new or modified Network Element, interconnection option or service option not ordered by the FCC or Commission, if BellSouth determines that the preliminary analysis of the requested BFR is of such complexity that it will cause BellSouth to expend extraordinary resources to evaluate the BFR, BellSouth shall notify Neutral Tandem within ten (10) business days of BellSouth's receipt of BFR that a fee will be required prior to the preliminary evaluation of the BFR. Such fee shall be limited to BellSouth's extraordinary expenses directly related to the complex request that require the allocation and engagement of additional resources above the existing allocated resources used on BFR cost development which include, but are not limited to, expenditure of funds to develop feasibility studies, specific resources that are required to determine request requirements (such as operation support system analysts, technical managers, software developers), software impact analysis by specific software developers; software architecture development, hardware impact analysis by specific system analysts, etc. and the request for such fee shall be accompanied with a general breakdown of such costs. If Neutral Tandem accepts the complex request evaluation fee proposed by BellSouth, Neutral Tandem shall submit such fee within thirty (30) business days of BellSouth's notice that a complex request evaluation fee is required. Within thirty (30) business days of BellSouth's receipt of the complex request evaluation fee, BellSouth shall respond to Neutral Tandem by providing a preliminary analysis, consistent with Section 1.4 of this Attachment 11.

1.7 Neutral Tandem may cancel a BFR at any time up until thirty (30) business days after receiving BellSouth's preliminary analysis. If Neutral

Tandem cancels the BFR within thirty (30) business days after receipt of BellSouth's preliminary analysis, BellSouth shall be entitled to keep any complex request evaluation fee submitted in accordance with Section 1.6 above, minus those costs included in the fee that have not been incurred as of the date of cancellation.

1.8 Neutral Tandem will have thirty (30) business days from receipt of preliminary analysis to accept the preliminary analysis or cancel the BFR. If Neutral Tandem fails to respond within this thirty (30) business day period, the BFR will be deemed cancelled. Acceptance of the preliminary analysis must be in writing and accompanied by the estimated Development Rate for the new or modified Network Element, interconnection option or service option quoted in the preliminary analysis**.**

1.9 Notwithstanding any other provision of this Agreement, BellSouth shall propose a firm price quote, including the firm Development Rate, the firm nonrecurring rate and the firm recurring rate, and a detailed implementation plan within ten (10) business days of receipt of Neutral Tandem's accurate BFR application for a Network Element, interconnection option or service option that is operational at the time of the request; thirty (30) business days of receipt of Neutral Tandem's accurate BFR application for a new or modified Network Element, interconnection option or service option ordered by the FCC or Commission; and within sixty (60) business days of receipt of Neutral Tandem's accurate BFR application for a new or modified Network Element, interconnection option or service option not ordered by the FCC or Commission or not operational at the time of the request. The firm nonrecurring rate will not include any of the Development Rate or the complex request evaluation fee, if required, in the calculation of this rate. Such firm price quote shall not exceed the estimate provided with the preliminary analysis by more than 25%.

1.10 Neutral Tandem shall have thirty (30) business days from receipt of firm price quote to accept or deny the firm price quote and submit any additional Development or nonrecurring rates quoted in the firm price quote.

1.11 Unless Neutral Tandem agrees otherwise, all prices shall be consistent with the applicable pricing principles and provisions of the Act.

1.12 If Neutral Tandem believes that BellSouth's firm price quote is not consistent with the requirements of the Act, either Party may seek dispute resolution in accordance with the dispute resolution provisions set forth in the General Terms and Conditions of this Agreement.

1.13 Upon agreement to the rates, terms and conditions of a BFR, the Parties shall negotiate in good faith an amendment to this Agreement.

2 New Business Request

2.1 Neutral Tandem also shall be permitted to request the development of new or modified facilities or service options which may not be required by the Act. Procedures applicable to requesting the addition of such elements, services and options are specified in this Attachment 11. A New Business Request (NBR) is to be used by Neutral Tandem to make a request of BellSouth for a new or modified feature or capability of an existing product or service, a new product or service that is not deployed within the BellSouth network or operations and business support systems, or a new or modified service option that was not previously included in this Agreement (Requested NBR Services) and is not required by the Act.

2.2 An NBR shall be submitted in writing by Neutral Tandem and shall specifically identify the requested service date, technical requirements, space requirements and/or such specifications that clearly define the request such that BellSouth has sufficient information to analyze and prepare a response. The request shall be sent to Neutral Tandem's designated BellSouth Sales contact or LCM.

2.3 Within two (2) business days of receipt of an NBR, BellSouth shall acknowledge in writing its receipt and identify a single point of contact responsible for responding to the NBR and shall request any additional information needed to process the request to the extent known at that time. Notwithstanding the foregoing, BellSouth may reasonably request additional information from Neutral Tandem at any time during the processing of the NBR.

2.4 If the preliminary analysis of the request NBR is not of such complexity that it will cause BellSouth to expend extraordinary resources to evaluate the NBR, within thirty (30) business days of its receipt of the NBR, BellSouth shall respond to Neutral Tandem by providing a preliminary analysis of such Requested NBR Services that are the subject of the NBR. The preliminary analysis shall either confirm that BellSouth will offer access to the Requested NBR Services or confirm that BellSouth will not offer the Requested NBR Services.

2.5 If the preliminary analysis states that BellSouth will offer the Requested NBR Services, the preliminary analysis will include an estimate of the Development Rate including a general breakdown of costs and the date the request can be met. If BellSouth cannot provide the Requested NBR Service by the requested date, it shall provide an alternative proposed date

together with a detailed explanation as to why BellSouth is not able to meet Neutral Tandem's requested date.

2.6 If BellSouth determines that the preliminary analysis of the requested NBR is of such complexity that it will cause BellSouth to expend extraordinary resources to evaluate the NBR, BellSouth shall notify Neutral Tandem within ten (10) business days of BellSouth's notice that a complex request evaluation fee is required prior to the evaluation of the NBR. Such fee shall be limited to BellSouth's extraordinary expenses directly related to the complex request. If Neutral Tandem accepts the complex request evaluation fee amount proposed by BellSouth, Neutral Tandem shall submit such complex request evaluation fee within thirty (30) business days of BellSouth's notice that a complex request evaluation fee is required.

2.7 Within thirty (30) business days of BellSouth's receipt of the complex request evaluation fee, BellSouth shall respond to Neutral Tandem by providing a preliminary analysis of such Requested NBR Services.

2.8 Neutral Tandem may cancel an NBR at any time. If Neutral Tandem cancels the request more than ten (10) business days after submitting it, Neutral Tandem shall pay BellSouth's reasonable and demonstrable costs of processing and/or implementing the NBR up to the date of cancellation in addition to any fee submitted in accordance with Section 1.6 above.

2.9 Neutral Tandem will have thirty (30) business days from receipt of the preliminary analysis to accept the preliminary analysis or cancel the NBR. If Neutral Tandem fails to respond within this thirty (30) business day period, the NBR will be deemed cancelled.

2.10 Acceptance of the preliminary analysis must be in writing and accompanied by the estimated Development Rate for the Requested NBR Services quoted in the preliminary analysis.

2.11 BellSouth shall propose a firm price quote including the firm Development Rate, the firm nonrecurring rate, and the firm recurring rate, and a detailed implementation plan within ten (10) business days of receipt of Neutral Tandem's accurate NBR application for a Requested NBR Service that is operational at the time of the request and within sixty (60) business days of receipt of Neutral Tandem's accurate NBR application for the Requested NBR Services not operational at the time of the request. The firm nonrecurring rate will not include any of the Development Rate or the complex request evaluation fee, if required, in the calculation of this rate. Such firm price quote shall not exceed the estimate provided with the preliminary analysis by more than 25%.

2.12 Neutral Tandem shall have thirty (30) business days from receipt of the firm price quote to accept or deny the firm price quote and submit any additional nonrecurring, non-refundable fees quoted in the firm price quote. If the firm price quote is less than the preliminary analysis' estimate of the Development Rate, BellSouth will credit Neutral Tandem's account for the difference.

2.13 Upon agreement to the rates, terms and conditions of a NBR, an amendment to this Agreement, or a separate agreement, may be required and the Parties shall negotiate such agreement or amendment in good faith.

Amendment to the Agreement
Between
Neutral Tandem-Florida and Neutral Tandem-Georgia, LLC
and
BellSouth Telecommunications, Inc.
Dated February 25, 2005

Pursuant to this Amendment, (the "Amendment"), Neutral Tandem-Florida and Neutral Tandem-Georgia, LLC (Neutral Tandem), and BellSouth Telecommunications, Inc. (BellSouth), hereinafter referred to collectively as the "Parties", hereby agree to amend that certain Interconnection Agreement between the Parties dated February 25, 2005 (Agreement).

WHEREAS, on February 21, 2006, the Georgia Public Service Commission (Commission) issued a Letter Order in Docket No. 14361-U (Letter Order) establishing new UNE rates (New UNE Rates) to replace the rates previously ordered by the Commission on June 24, 2003 and September 22, 2003 in the first phase of Docket No. 14361-U (Old UNE Rates); and

WHEREAS, the Letter Order entitles BellSouth to recover the difference between the Old UNE Rates and the New UNE Rates for the period of time that BellSouth charged Neutral Tandem the Old UNE Rates; and

WHEREAS, the Parties are obligated to amend the Agreement to replace the Old UNE Rates in the Agreement with the New UNE Rates established by the Commission in its Letter Order; and

NOW, THEREFORE, in consideration of the mutual provisions contained herein and other good and valuable consideration, the receipt and sufficiency of which are hereby acknowledged, the Parties hereby covenant and agree as follows:

1. The Parties hereby agree to incorporate into the Agreement the New UNE Rates set forth in Exhibit 1 to Attachment 1, Exhibit 2 to Attachment 2, Exhibit 3 to Attachment 3, and Exhibit 4 to Attachment 4, all as attached hereto and incorporated herein by this reference, and such rates shall apply to services provided in the State of Georgia only.

2. To the extent that the New UNE Rates set forth in Exhibit 1 to Attachment 1, Exhibit 2 to Attachment 2, and Exhibit 4 to Attachment 4, all attached hereto, conflict with any other rates in the Agreement, the rates in these attached Exhibits shall prevail for the State of Georgia.

3. Exhibit A to Attachment 3 of the Agreement shall be deleted in its entirety, and Exhibit 3 to Attachment 3 as attached hereto shall be substituted in lieu thereof.

4. For purposes of amending the Agreement to incorporate the New UNE Rates on a going-forward basis, this Amendment shall be deemed effective on March 31, 2006 (Amendment Effective Date). For purposes of the true up of the difference between New UNE Rates set forth in the Letter Order and Old UNE Rates for the period of time that BellSouth billed Neutral Tandem the Old UNE Rates, the New UNE Rates for Attachment 3 of the Agreement shall become effective on

February 25, 2005, and the New UNE Rates for Attachments 1, 2 and 4 of the Agreement shall become effective on February 25, 2005.

5. All of the other provisions of the Agreement shall remain in full force and effect.

6. Either or both of the Parties is authorized to submit this Amendment to the respective state regulatory authorities for approval subject to Section 252(e) of the Federal Telecommunications Act of 1996.

IN WITNESS WHEREOF, the Parties have executed this Amendment the day and year written below.

BellSouth Telecommunications, Inc.

By: Kristen E. Shore

Name: Kristen E. Shore

Title: Director

Date: 10/11/06

Neutral Tandem-Florida and Neutral Tandem-Georgia, LLC

By:

Name: Ron Gavillet

Title: EVP

Date: 10/16/06

RESALE DISCOUNTS & RATES - Georgia														Attachment: 1 Exh: D			
CATEGORY		RATE ELEMENTS	Interim	Zone	BCS	USOC	RATES($)					Svc Order Submitted Elec per LSR	Svc Order Submitted Manually per LSR	Incremental Charge - Manual Svc Order vs. Electronic-1st	Incremental Charge - Manual Svc Order vs. Electronic-Add'l	Incremental Charge - Manual Svc Order vs. Electronic-Disc 1st	Incremental Charge - Manual Svc Order vs. Electronic-Disc Add'l
								Nonrecurring		Nonrecurring Disconnect		OSS Rates($)					
							Rec	First	Add'l	First	Add'l	SOMEC	SOMAN	SOMAN	SOMAN	SOMAN	SOMAN
ODUF/EODUF SERVICES																	
	OPTIONAL DAILY USAGE FILE (ODUF)																
		ODUF: Recording, per message					0.000007										
		ODUF: Message Processing, per message					0.002165										
		ODUF: Message Processing, per Magnetic Tape provisioned					36.02										
		ODUF: Data Transmission (CONNECT:DIRECT), per message					0.00010888										
	ENHANCED OPTIONAL DAILY USAGE FILE (EODUF)																
		EODUF: Message Processing, per message					0.229077										

UNBUNDLED NETWORK ELEMENTS - Georgia														Attachement 2 Exh: A			
CATEGORY		RATE ELEMENTS	Interim	Zone	BCS	USOC	RATES($)					Svc Order Submitted Elec per LSR	Svc Order Submitted Manually per LSR	Incremental Charge - Manual Svc Order vs. Electronic-1st	Incremental Charge - Manual Svc Order vs. Electronic-Add'l	Incremental Charge - Manual Svc Order vs. Electronic-Disc 1st	Incremental Charge - Manual Svc Order vs. Electronic-Disc Add'l
								Nonrecurring		Nonrecurring Disconnect		OSS Rates($)					
							Rec	First	Add'l	First	Add'l	SOMEC	SOMAN	SOMAN	SOMAN	SOMAN	SOMAN
	The "Zone" shown in the sections for stand-alone loops or loops as part of a combination refers to Geographically Deaveraged UNE Zones. To view Geographically Deaveraged UNE Zone Designations by Central Office, refer to internet Website: http://www.interconnection.bellsouth.com/become_a_clec/html/interconnection.htm																
OPERATIONS SUPPORT SYSTEMS (OSS) - "REGIONAL RATES"																	
		OSS - Manual Service Order Charge, Per Local Service Request (LSR) - UNE Only				SOMAN		11.71	0.00	6.13	0.00						
UNBUNDLED EXCHANGE ACCESS LOOP																	
	2-WIRE ANALOG VOICE GRADE LOOP																
		2-Wire Analog Voice Grade Loop - Service Level 1- Zone 1		1	UEANL	UEAL2	12.08	39.98	9.98	5.61	1.72						
		2-Wire Analog Voice Grade Loop - Service Level 1- Zone 2		2	UEANL	UEAL2	17.43	39.98	9.98	5.61	1.72						
		2-Wire Analog Voice Grade Loop - Service Level 1- Zone 3		3	UEANL	UEAL2	35.09	39.98	9.98	5.61	1.72						
		2-Wire Analog Voice Grade Loop - Service Level 1- Zone 1		1	UEANL	UEASL	12.08	39.98	9.98	5.61	1.72						
		2-Wire Analog Voice Grade Loop - Service Level 1- Zone 2		2	UEANL	UEASL	17.43	39.98	9.98	5.61	1.72						
		2-Wire Analog Voice Grade Loop - Service Level 1- Zone 3		3	UEANL	UEASL	35.09	39.98	9.98	5.61	1.72						
		Manual Order Coordiantion for UVL-SL1s (per loop)			UEANL	UEAMC		18.90	18.90								
		Order Coordination for Specified Conversion Time for UVL-SL1 (per LSR)			UEANL	OCOSL		57.73									
		Unbundled Non-Design Voice Loop, billing for BST providing make-up (Engineering Information - E.I.)			UEANL	UEANM		7.29	7.29								
	2-WIRE UNBUNDLED COPPER LOOP - NON-DESIGNED																
		2 Wire Unbundled Copper Loop Non-Designed- Zone 1		1	UEQ	UEQ2X	11.02	44.69	22.40	0.00	0.00						
		2 Wire Unbundled Copper Loop Non-Designed- Zone 2		2	UEQ	UEQ2X	12.72	44.69	22.40	0.00	0.00						
		2 Wire Unbundled Copper Loop Non-Designed-Zone 3		3	UEQ	UEQ2X	20.22	44.69	22.40	0.00	0.00						
		Manual Order Coordination 2 Wire Unbundled Copper Loop - Non-Designed (per loop)			UEQ	USBMC		18.90	18.90								
		Unbundled Copper Loop - Non-Design, billing for BST providing make-up (Engineering Information - E.I.)			UEQ	UEQMU		7.29	7.29								
UNBUNDLED EXCHANGE ACCESS LOOP																	
	2-WIRE ANALOG VOICE GRADE LOOP																
		2-Wire Analog Voice Grade Loop - Service Level 2 w/Loop or Ground Start Signaling - Zone 1		1	UEA	UEAL2	13.32	79.78	24.62	18.90	7.86						
		2-Wire Analog Voice Grade Loop - Service Level 2 w/Loop or Ground Start Signaling - Zone 2		2	UEA	UEAL2	18.66	79.78	24.62	18.90	7.86						
		2-Wire Analog Voice Grade Loop - Service Level 2 w/Loop or Ground Start Signaling - Zone 3		3	UEA	UEAL2	36.33	79.78	24.62	18.90	7.86						
		2-Wire Analog Voice Grade Loop - Service Level 2 w/Reverse Battery Signaling - Zone 1		1	UEA	UEAR2	13.32	79.78	24.62	18.90	7.86						
		2-Wire Analog Voice Grade Loop - Service Level 2 w/Reverse Battery Signaling - Zone 2		2	UEA	UEAR2	18.66	79.78	24.62	18.90	7.86						
		2-Wire Analog Voice Grade Loop - Service Level 2 w/Reverse Battery Signaling - Zone 3		3	UEA	UEAR2	36.33	79.78	24.62	18.90	7.86						
		Switch-as-is Conversion rate per UNE Loop, Single LSR (per DS0)*			UEA	URESL		5.69	5.69								
		Switch-as-is Conversion rate per UNE Loop, Spreadsheet (per DS0)*			UEA	URESP		5.69	5.69								
	4-WIRE ANALOG VOICE GRADE LOOP																
		4-Wire Analog Voice Grade Loop - Zone 1		1	UEA	UEAL4	21.04	92.92	28.14	19.50	8.12						
		4-Wire Analog Voice Grade Loop - Zone 2		2	UEA	UEAL4	24.49	92.92	28.14	19.50	8.12						
		4-Wire Analog Voice Grade Loop - Zone 3		3	UEA	UEAL4	33.40	92.92	28.14	19.50	8.12						
		Switch-as-is Conversion rate per UNE Loop, Single LSR (per DS0)*			UEA	URESL		5.69	5.69								
		Switch-as-is Conversion rate per UNE Loop, Spreadsheet (per DS0)*			UEA	URESP		5.69	5.69								
	2-WIRE ISDN DIGITAL GRADE LOOP																
		2-Wire ISDN Digital Grade Loop - Zone 1		1	UDN	U1L2X	21.89	180.06	35.25	18.23	6.97						
		2-Wire ISDN Digital Grade Loop - Zone 2		2	UDN	U1L2X	25.27	180.06	35.25	18.23	6.97						
		2-Wire ISDN Digital Grade Loop - Zone 3		3	UDN	U1L2X	40.17	180.06	35.25	18.23	6.97						
	2-WIRE ASYMMETRICAL DIGITAL SUBSCRIBER LINE (ADSL) COMPATIBLE LOOP																

UNBUNDLED NETWORK ELEMENTS - Georgia														Attachement 2 Exh: A			
CATEGORY		RATE ELEMENTS	Interim	Zone	BCS	USOC	RATES($)					Svc Order Submitted Elec per LSR	Svc Order Submitted Manually per LSR	Incremental Charge - Manual Svc Order vs. Electronic-1st	Incremental Charge - Manual Svc Order vs. Electronic-Add'l	Incremental Charge - Manual Svc Order vs. Electronic-Disc 1st	Incremental Charge - Manual Svc Order vs. Electronic-Disc Add'l
								Nonrecurring		Nonrecurring Disconnect		OSS Rates($)					
							Rec	First	Add'l	First	Add'l	SOMEC	SOMAN	SOMAN	SOMAN	SOMAN	SOMAN
		2 Wire Unbundled ADSL Loop including manual service inquiry & facility reservation - Zone 1		1	UAL	UAL2X	11.23	44.69	31.55	0.00	0.00						
		2 Wire Unbundled ADSL Loop including manual service inquiry & facility reservation - Zone 2		2	UAL	UAL2X	12.97	44.69	31.55	0.00	0.00						
		2 Wire Unbundled ADSL Loop including manual service inquiry & facility reservation - Zone 3		3	UAL	UAL2X	20.62	44.69	31.55	0.00	0.00						
		2 Wire Unbundled ADSL Loop without manual service inquiry & facility reservaton - Zone 1		1	UAL	UAL2W	11.23	44.69	31.55	0.00	0.00						
		2 Wire Unbundled ADSL Loop without manual service inquiry & facility reservaton - Zone 2		2	UAL	UAL2W	12.97	44.69	31.55	0.00	0.00						
		2 Wire Unbundled ADSL Loop without manual service inquiry & facility reservaton - Zone 3		3	UAL	UAL2W	20.62	44.69	31.55	0.00	0.00						
	2-WIRE HIGH BIT RATE DIGITAL SUBSCRIBER LINE (HDSL) COMPATIBLE LOOP																
		2 Wire Unbundled HDSL Loop including manual service inquiry & facility reservation - Zone 1		1	UHL	UHL2X	7.88	44.69	31.55	0.00	0.00						
		2 Wire Unbundled HDSL Loop including manual service inquiry & facility reservation - Zone 2		2	UHL	UHL2X	9.09	44.69	31.55	0.00	0.00						
		2 Wire Unbundled HDSL Loop including manual service inquiry & facility reservation - Zone 3		3	UHL	UHL2X	14.48	44.69	31.55	0.00	0.00						
		2 Wire Unbundled HDSL Loop without manual service inquiry and facility reservation - Zone 1		1	UHL	UHL2W	7.88	44.69	31.55	0.00	0.00						
		2 Wire Unbundled HDSL Loop without manual service inquiry and facility reservation - Zone 2		2	UHL	UHL2W	9.09	44.69	31.55	0.00	0.00						
		2 Wire Unbundled HDSL Loop without manual service inquiry and facility reservation - Zone 3		3	UHL	UHL2W	14.48	44.69	31.55	0.00	0.00						
	4-WIRE HIGH BIT RATE DIGITAL SUBSCRIBER LINE (HDSL) COMPATIBLE LOOP																
		4 Wire Unbundled HDSL Loop including manual service inquiry and facility reservation - Zone 1		1	UHL	UHL4X	10.39	44.69	31.55	0.00	0.00						
		4-Wire Unbundled HDSL Loop including manual service inquiry and facility reservation - Zone 2		2	UHL	UHL4X	12.00	44.69	31.55	0.00	0.00						
		4-Wire Unbundled HDSL Loop including manual service inquiry and facility reservation - Zone 3		3	UHL	UHL4X	19.07	44.69	31.55	0.00	0.00						
		4-Wire Unbundled HDSL Loop without manual service inquiry and facility reservation - Zone 1		1	UHL	UHL4W	10.39	44.69	31.55	0.00	0.00						
		4-Wire Unbundled HDSL Loop without manual service inquiry and facility reservation - Zone 2		2	UHL	UHL4W	12.00	44.69	31.55	0.00	0.00						
		4-Wire Unbundled HDSL Loop without manual service inquiry and facility reservation - Zone 3		3	UHL	UHL4W	19.07	44.69	31.55	0.00	0.00						
	4-WIRE DS1 DIGITAL LOOP																
		4-Wire DS1 Digital Loop - Zone 1		1	USL	USLXX	49.41	211.72	72.42	38.20	7.19						
		4-Wire DS1 Digital Loop - Zone 2		2	USL	USLXX	52.55	211.72	72.42	38.20	7.19						
		4-Wire DS1 Digital Loop - Zone 3		3	USL	USLXX	68.40	211.72	72.42	38.20	7.19						
		Switch-as-is Conversion rate per UNE Loop, Single LSR (per DS1)*			USL	URESL		5.69	5.69								
		Switch-as-is Conversion rate per UNE Loop, Spreadsheet (per DS1)*			USL	URESP		5.69	5.69								
	4-WIRE 19.2, 56 OR 64 KBPS DIGITAL GRADE LOOP																
		4 Wire Unbundled Digital Loop 2.4 Kbps - Zone 1		1	UDL	UDL2X	25.81	196.47	36.96	18.80	7.19						
		4 Wire Unbundled Digital Loop 2.4 Kbps - Zone 2		2	UDL	UDL2X	31.54	196.47	36.96	18.80	7.19						
		4 Wire Unbundled Digital Loop 2.4 Kbps - Zone 3		3	UDL	UDL2X	42.38	196.47	36.96	18.80	7.19						
		4 Wire Unbundled Digital Loop 4.8 Kbps - Zone 1		1	UDL	UDL4X	25.81	196.47	36.96	18.80	7.19						
		4 Wire Unbundled Digital Loop 4.8 Kbps - Zone 2		2	UDL	UDL4X	31.54	196.47	36.96	18.80	7.19						
		4 Wire Unbundled Digital Loop 4.8 Kbps - Zone 3		3	UDL	UDL4X	42.38	196.47	36.96	18.80	7.19						
		4 Wire Unbundled Digital Loop 9.6 Kbps - Zone 1		1	UDL	UDL9X	25.81	196.47	36.96	18.80	7.19						
		4 Wire Unbundled Digital Loop 9.6 Kbps - Zone 2		2	UDL	UDL9X	31.54	196.47	36.96	18.80	7.19						
		4 Wire Unbundled Digital Loop 9.6 Kbps - Zone 3		3	UDL	UDL9X	42.38	196.47	36.96	18.80	7.19						
		4 Wire Unbundled Digital 19.2 Kbps - Zone 1		1	UDL	UDL19	25.81	196.47	36.96	18.80	7.19						
		4 Wire Unbundled Digital 19.2 Kbps - Zone 2		2	UDL	UDL19	31.54	196.47	36.96	18.80	7.19						
		4 Wire Unbundled Digital 19.2 Kbps - Zone 3		3	UDL	UDL19	42.38	196.47	36.96	18.80	7.19						

UNBUNDLED NETWORK ELEMENTS - Georgia														Attachement 2 Exh: A			
CATEGORY		RATE ELEMENTS	Interim	Zone	BCS	USOC	RATES($)					Svc Order Submitted Elec per LSR	Svc Order Submitted Manually per LSR	Incremental Charge - Manual Svc Order vs. Electronic-1st	Incremental Charge - Manual Svc Order vs. Electronic-Add'l	Incremental Charge - Manual Svc Order vs. Electronic-Disc 1st	Incremental Charge - Manual Svc Order vs. Electronic-Disc Add'l
								Nonrecurring		Nonrecurring Disconnect		OSS Rates($)					
							Rec	First	Add'l	First	Add'l	SOMEC	SOMAN	SOMAN	SOMAN	SOMAN	SOMAN
		4 Wire Unbundled Digital Loop 56 Kbps - Zone 1		1	UDL	UDL56	25.81	196.47	36.96	18.80	7.19						
		4 Wire Unbundled Digital Loop 56 Kbps - Zone 2		2	UDL	UDL56	31.54	196.47	36.96	18.80	7.19						
		4 Wire Unbundled Digital Loop 56 Kbps - Zone 3		3	UDL	UDL56	42.38	196.47	36.96	18.80	7.19						
		4 Wire Unbundled Digital Loop 64 Kbps - Zone 1		1	UDL	UDL64	25.81	196.47	36.96	18.80	7.19						
		4 Wire Unbundled Digital Loop 64 Kbps - Zone 2		2	UDL	UDL64	31.54	196.47	36.96	18.80	7.19						
		4 Wire Unbundled Digital Loop 64 Kbps - Zone 3		3	UDL	UDL64	42.38	196.47	36.96	18.80	7.19						
		Switch-as-is Conversion rate per UNE Loop, Single LSR (per DS0)*			UDL	URESL		5.69	5.69								
		Switch-as-is Conversion rate per UNE Loop, Spreadsheet (per DS0)*			UDL	URESP		5.69	5.69								
	2-WIRE Unbundled COPPER LOOP																
		2-Wire Unbundled Copper Loop-Designed including manual service inquiry & facility reservation - Zone 1		1	UCL	UCLPB	12.02	44.69	31.55	0.00	0.00						
		2-Wire Unbundled Copper Loop-Designed including manual service inquiry & facility reservation - Zone 2		2	UCL	UCLPB	13.88	44.69	31.55	0.00	0.00						
		2 Wire Unbundled Copper Loop-Designed including manual service inquiry & facility reservation - Zone 3		3	UCL	UCLPB	22.07	44.69	31.55	0.00	0.00						
		2-Wire Unbundled Copper Loop-Designed without manual service inquiry and facility reservation - Zone 1		1	UCL	UCLPW	12.02	44.69	31.55	0.00	0.00						
		2-Wire Unbundled Copper Loop-Designed without manual service inquiry and facility reservation - Zone 2		2	UCL	UCLPW	13.88	44.69	31.55	0.00	0.00						
		2-Wire Unbundled Copper Loop-Designed without manual service inquiry and facility reservation - Zone 3		3	UCL	UCLPW	22.07	44.69	31.55	0.00	0.00						
		Order Coordination for Unbundled Copper Loops (per loop)			UCL	UCLMC		18.90	18.90								
	4-WIRE COPPER LOOP																
		4-Wire Copper Loop-Designed including manual service inquiry and facility reservation - Zone 1		1	UCL	UCL4S	16.65	44.69	31.55	0.00	0.00						
		4-Wire Copper Loop-Designed including manual service inquiry and facility reservation - Zone 2		2	UCL	UCL4S	19.22	44.69	31.55	0.00	0.00						
		4-Wire Copper Loop-Designed including manual service inquiry and facility reservation - Zone 3		3	UCL	UCL4S	30.55	44.69	31.55	0.00	0.00						
		4-Wire Copper Loop-Designed without manual service inquiry and facility reservation - Zone 1		1	UCL	UCL4W	16.65	44.69	31.55	0.00	0.00						
		4-Wire Copper Loop-Designed without manual service inquiry and facility reservation - Zone 2		2	UCL	UCL4W	19.22	44.69	31.55	0.00	0.00						
		4-Wire Copper Loop-Designed without manual service inquiry and facility reservation - Zone 3		3	UCL	UCL4W	30.55	44.69	31.55	0.00	0.00						
		Order Coordination for Unbundled Copper Loops (per loop)			UCL	UCLMC		18.90	18.90								
		Order Coordination for Specified Conversion Time (per LSR)			UEA, UDN, UAL, UHL, UDL, USL	OCOSL		57.73									
UNE LOOP COMMINGLING																	
	UNE LOOP COMMINGLING (Loop as part of a Multi-bandwidth commingling arrangement)																
	2-WIRE ANALOG VOICE GRADE LOOP - COMMINGLING																
		2-Wire Analog Voice Grade Loop - Service Level 2 w/Loop or Ground Start Signaling - Zone 1		1	NTCVG	UEAL2	13.32	79.78	24.62	18.90	7.86						
		2-Wire Analog Voice Grade Loop - Service Level 2 w/Loop or Ground Start Signaling - Zone 2		2	NTCVG	UEAL2	18.66	79.78	24.62	18.90	7.86						
		2-Wire Analog Voice Grade Loop - Service Level 2 w/Loop or Ground Start Signaling - Zone 3		3	NTCVG	UEAL2	36.33	79.78	24.62	18.90	7.86						
		2-Wire Analog Voice Grade Loop - Service Level 2 w/Reverse Battery Signaling - Zone 1		1	NTCVG	UEAR2	13.32	79.78	24.62	18.90	7.86						
		2-Wire Analog Voice Grade Loop - Service Level 2 w/Reverse Battery Signaling - Zone 2		2	NTCVG	UEAR2	18.66	79.78	24.62	18.90	7.86						
		2-Wire Analog Voice Grade Loop - Service Level 2 w/Reverse Battery Signaling - Zone 3		3	NTCVG	UEAR2	36.33	79.78	24.62	18.90	7.86						
		Switch-as-is Conversion rate per UNE Loop, Single LSR (per DS0)*			NTCVG	URESL		5.69	5.69								
		Switch-as-is Conversion rate per UNE Loop, Spreadsheet (per DS0)*			NTCVG	URESP		5.69	5.69								

UNBUNDLED NETWORK ELEMENTS - Georgia														Attachement 2 Exh: A			
CATEGORY		RATE ELEMENTS	Interim	Zone	BCS	USOC	RATES($)					Svc Order Submitted Elec per LSR	Svc Order Submitted Manually per LSR	Incremental Charge - Manual Svc Order vs. Electronic-1st	Incremental Charge - Manual Svc Order vs. Electronic-Add'l	Incremental Charge - Manual Svc Order vs. Electronic-Disc 1st	Incremental Charge - Manual Svc Order vs. Electronic-Disc Add'l
								Nonrecurring		Nonrecurring Disconnect		OSS Rates($)					
							Rec	First	Add'l	First	Add'l	SOMEC	SOMAN	SOMAN	SOMAN	SOMAN	SOMAN
	4-WIRE ANALOG VOICE GRADE LOOP																
		4-Wire Analog Voice Grade Loop - Zone 1		1	NTCVG	UEAL4	21.04	92.92	28.14	19.50	8.12						
		4-Wire Analog Voice Grade Loop - Zone 2		2	NTCVG	UEAL4	24.49	92.92	28.14	19.50	8.12						
		4-Wire Analog Voice Grade Loop - Zone 3		3	NTCVG	UEAL4	33.40	92.92	28.14	19.50	8.12						
		Switch-as-is Conversion rate per UNE Loop, Single LSR (per DS0)*			NTCVG	URESL		5.69	5.69								
		Switch-as-is Conversion rate per UNE Loop, Spreadsheet (per DS0)*			NTCVG	URESP		5.69	5.69								
	4-WIRE DS1 DIGITAL LOOP - COMMINGLING																
		4-Wire DS1 Digital Loop - Zone 1		1	NTCD1	USLXX	49.41	211.72	72.42	38.20	7.19						
		4-Wire DS1 Digital Loop - Zone 2		2	NTCD1	USLXX	52.55	211.72	72.42	38.20	7.19						
		4-Wire DS1 Digital Loop - Zone 3		3	NTCD1	USLXX	68.40	211.72	72.42	38.20	7.19						
		Switch-as-is Conversion rate per UNE Loop, Single LSR (per DS1)*			NTCD1	URESL		5.69	5.69								
		Switch-as-is Conversion rate per UNE Loop, Spreadsheet (per DS1)*			NTCD1	URESP		5.69	5.69								
	4-WIRE 19.2, 56 OR 64 KBPS DIGITAL GRADE LOOP - COMMINGLING																
		4 Wire Unbundled Digital Loop 2.4 Kbps - Zone 1		1	NTCUD	UDL2X	25.81	196.47	36.96	18.80	7.19						
		4 Wire Unbundled Digital Loop 2.4 Kbps - Zone 2		2	NTCUD	UDL2X	31.54	196.47	36.96	18.80	7.19						
		4 Wire Unbundled Digital Loop 2.4 Kbps - Zone 3		3	NTCUD	UDL2X	42.38	196.47	36.96	18.80	7.19						
		4 Wire Unbundled Digital Loop 4.8 Kbps - Zone 1		1	NTCUD	UDL4X	25.81	196.47	36.96	18.80	7.19						
		4 Wire Unbundled Digital Loop 4.8 Kbps - Zone 2		2	NTCUD	UDL4X	31.54	196.47	36.96	18.80	7.19						
		4 Wire Unbundled Digital Loop 4.8 Kbps - Zone 3		3	NTCUD	UDL4X	42.38	196.47	36.96	18.80	7.19						
		4 Wire Unbundled Digital Loop 9.6 Kbps - Zone 1		1	NTCUD	UDL9X	25.81	196.47	36.96	18.80	7.19						
		4 Wire Unbundled Digital Loop 9.6 Kbps - Zone 2		2	NTCUD	UDL9X	31.54	196.47	36.96	18.80	7.19						
		4 Wire Unbundled Digital Loop 9.6 Kbps - Zone 3		3	NTCUD	UDL9X	42.38	196.47	36.96	18.80	7.19						
		4 Wire Unbundled Digital 19.2 Kbps - Zone 1		1	NTCUD	UDL19	25.81	196.47	36.96	18.80	7.19						
		4 Wire Unbundled Digital 19.2 Kbps - Zone 2		2	NTCUD	UDL19	31.54	196.47	36.96	18.80	7.19						
		4 Wire Unbundled Digital 19.2 Kbps - Zone 3		3	NTCUD	UDL19	42.38	196.47	36.96	18.80	7.19						
		4 Wire Unbundled Digital Loop 56 Kbps - Zone 1		1	NTCUD	UDL56	25.81	196.47	36.96	18.80	7.19						
		4 Wire Unbundled Digital Loop 56 Kbps - Zone 2		2	NTCUD	UDL56	31.54	196.47	36.96	18.80	7.19						
		4 Wire Unbundled Digital Loop 56 Kbps - Zone 3		3	NTCUD	UDL56	42.38	196.47	36.96	18.80	7.19						
		4 Wire Unbundled Digital Loop 64 Kbps - Zone 1		1	NTCUD	UDL64	25.81	196.47	36.96	18.80	7.19						
		4 Wire Unbundled Digital Loop 64 Kbps - Zone 2		2	NTCUD	UDL64	31.54	196.47	36.96	18.80	7.19						
		4 Wire Unbundled Digital Loop 64 Kbps - Zone 3		3	NTCUD	UDL64	42.38	196.47	36.96	18.80	7.19						
		Order Coordination for Specified Conversion Time (per LSR)			NTCVG, NTCUD, NTCD1	OCOSL		57.73									
		Switch-as-is Conversion rate per UNE Loop, Single LSR (per DS0)*			NTCUD	URESL		5.69	5.69								
		Switch-as-is Conversion rate per UNE Loop, Spreadsheet (per DS0)*			NTCUD	URESP		5.69	5.69								
LOOP MODIFICATION																	
		Unbundled Loop Modification, Removal of Load Coils - 2 Wire pair less than or equal to 18k ft, per Unbundled Loop			UAL, UHL, UCL, UEQ, ULS, UEA, UEANL, UEPSR, UEPSB	ULM2L		0.00	0.00								
		Unbundled Loop Modification Removal of Load Coils - 4 Wire less than or equal to 18K ft, per Unbundled Loop			UHL, UCL, UEA	ULM4L		0.00	0.00								
		Unbundled Loop Modification Removal of Bridged Tap Removal, per Unbundled Loop			UAL, UHL, UCL, UEQ, ULS, UEA, UEANL, UEPSR, UEPSB	ULMBT		17.91									
SUB-LOOPS																	
	Sub-Loop Distribution																
		Sub-Loop - Per Cross Box Location - CLEC Feeder Facility Set-Up			UEANL, UEF	USBSA		255.51									
		Sub-Loop - Per Cross Box Location - Per 25 Pair Panel Set-Up			UEANL, UEF	USBSB		7.29									

UNBUNDLED NETWORK ELEMENTS - Georgia														Attachement 2 Exh: A			
CATEGORY		RATE ELEMENTS	Interim	Zone	BCS	USOC	RATES($)					Svc Order Submitted Elec per LSR	Svc Order Submitted Manually per LSR	Incremental Charge - Manual Svc Order vs. Electronic-1st	Incremental Charge - Manual Svc Order vs. Electronic-Add'l	Incremental Charge - Manual Svc Order vs. Electronic-Disc 1st	Incremental Charge - Manual Svc Order vs. Electronic-Disc Add'l
								Nonrecurring		Nonrecurring Disconnect		OSS Rates($)					
							Rec	First	Add'l	First	Add'l	SOMEC	SOMAN	SOMAN	SOMAN	SOMAN	SOMAN
		Sub-Loop - Per Building Equipment Room - CLEC Feeder Facility Set-Up			UEANL	USBSC		174.92									
		Sub-Loop - Per Building Equipment Room - Per 25 Pair Panel Set-Up			UEANL	USBSD		51.56									
		Unbundled Sub-Loops, Riser Cable, 2-Wire per Loop, Working and Spare Loop Activation			UEANL	USBRC	3.71	28.43	3.85	2.20	0.01						
		Unbundled Sub-Loops, Riser Cable, 4-Wire per Loop, Working and Spare Loop Activation			UEANL	USBRD	7.90	31.04	4.79	2.27	0.01						
		Sub-Loop Distribution Per 2-Wire Analog Voice Grade Loop - Zone 1		1	UEANL	USBN2	7.45	28.43	3.85	2.20	0.01						
		Sub-Loop Distribution Per 2-Wire Analog Voice Grade Loop - Zone 2		2	UEANL	USBN2	11.18	28.43	3.85	2.20	0.01						
		Sub-Loop Distribution Per 2-Wire Analog Voice Grade Loop - Zone 3		3	UEANL	USBN2	21.46	28.43	3.85	2.20	0.01						
		Sub-Loop Distribution Per 4-Wire Analog Voice Grade Loop - Zone 1		1	UEANL	USBN4	6.91	31.04	4.79	2.27	0.01						
		Sub-Loop Distribution Per 4-Wire Analog Voice Grade Loop - Zone 2		2	UEANL	USBN4	10.98	31.04	4.79	2.27	0.01						
		Sub-Loop Distribution Per 4-Wire Analog Voice Grade Loop - Zone 3		3	UEANL	USBN4	20.32	31.04	4.79	2.27	0.01						
		Order Coordination for Unbundled Sub-Loops, per sub-loop pair			UEANL	USBMC		18.90	18.90								
		Sub-Loop 2-Wire Intrabuilding Network Cable (INC)			UEANL	USBR2	3.71	28.43	3.85	2.20	0.01						
		Order Coordination for Unbundled Sub-Loops, per sub-loop pair			UEANL	USBMC		18.90	18.90								
		Sub-Loop 4-Wire Intrabuilding Network Cable (INC)			UEANL	USBR4	7.90	31.04	4.79	2.27	0.01						
		Order Coordination for Unbundled Sub-Loops, per sub-loop pair			UEANL	USBMC		18.90	18.90								
		2 Wire Copper Unbundled Sub-Loop Distribution - Zone 1		1	UEF	UCS2X	6.88	28.43	3.85	2.20	0.01						
		2 Wire Copper Unbundled Sub-Loop Distribution - Zone 2		2	UEF	UCS2X	8.32	28.43	3.85	2.20	0.01						
		2 Wire Copper Unbundled Sub-Loop Distribution - Zone 3		3	UEF	UCS2X	10.26	28.43	3.85	2.20	0.01						
		Order Coordination for Unbundled Sub-Loops, per sub-loop pair			UEF	USBMC		18.90	18.90								
		4 Wire Copper Unbundled Sub-Loop Distribution - Zone 1		1	UEF	UCS4X	7.55	31.04	4.79	2.27	0.01						
		4 Wire Copper Unbundled Sub-Loop Distribution - Zone 2		2	UEF	UCS4X	7.12	31.04	4.79	2.27	0.01						
		4 Wire Copper Unbundled Sub-Loop Distribution - Zone 3		3	UEF	UCS4X	10.26	31.04	4.79	2.27	0.01						
		Order Coordination for Unbundled Sub-Loops, per sub-loop pair			UEF	USBMC		18.90	18.90								
	Unbundled Sub-Loop Modification																
		Unbundled Sub-Loop Modification - 2-W Copper Dist Load Coil/Equip Removal per 2-W PR			UEF	ULM2X		0.00	0.00								
		Unbundled Sub-loop Modification - 4-W Copper Dist Load Coil/Equip Removal per 4-W PR			UEF	ULM4X		0.00	0.00								
		Unbundled Loop Modification, Removal of bridge Tap, per unbundled loop			UEF	ULMBT		0.00	0.00								
	Unbundled Network Terminating Wire (UNTW)																
		Unbundled Network Terminating Wire (UNTW) per Pair			UENTW	UENPP	0.5325	25.10	12.27								
	Network Interface Device (NID)																
		Network Interface Device (NID) - 1-2 lines			UENTW	UND12		32.82	20.67								
		Network Interface Device (NID) - 1-6 lines			UENTW	UND16		55.97	43.82								
		Network Interface Device Cross Connect - 2 W			UENTW	UNDC2		2.45	2.45								
		Network Interface Device Cross Connect - 4W			UENTW	UNDC4		2.45	2.45								
LOOP MAKE-UP																	
		Loop Makeup - Preordering Without Reservation, per working or spare facility queried (Manual).			UMK	UMKLW		15.18	15.18								
		Loop Makeup - Preordering With Reservation, per spare facility queried (Manual).			UMK	UMKLP		19.83	19.83								
		Loop Makeup--With or Without Reservation, per working or spare facility queried (Mechanized)			UMK	UMKMQ		0.823	0.823								

UNBUNDLED NETWORK ELEMENTS - Georgia														Attachement 2 Exh: A			
CATEGORY		RATE ELEMENTS	Interim	Zone	BCS	USOC	RATES($)					Svc Order Submitted Elec per LSR	Svc Order Submitted Manually per LSR	Incremental Charge - Manual Svc Order vs. Electronic-1st	Incremental Charge - Manual Svc Order vs. Electronic-Add'l	Incremental Charge - Manual Svc Order vs. Electronic-Disc 1st	Incremental Charge - Manual Svc Order vs. Electronic-Disc Add'l
								Nonrecurring		Nonrecurring Disconnect		OSS Rates($)					
							Rec	First	Add'l	First	Add'l	SOMEC	SOMAN	SOMAN	SOMAN	SOMAN	SOMAN
LINE SPLITTING																	
	END USER ORDERING-CENTRAL OFFICE BASED																
		Line Splitting - per line activation BST owned - physical			UEPSR UEPSB	UREBP	0.0197	34.43	22.35	10.38	7.34						
		Line Splitting - per line activation BST owned - virtual			UEPSR UEPSB	UREBV	0.0188	34.43	22.35	10.38	7.34						
	PHYSICAL COLLOCATION																
		Physical Collocation-2 Wire Cross Connects (Loop) for Line Splitting			UEPSR UEPSB	PE1LS	0.0202	0.00	0.00								
	VIRTUAL COLLOCATION																
		Virtual Collocation-2 Wire Cross Connects (Loop) for Line Splitting			UEPSR UEPSB	VE1LS	0.0192	0.00	0.00	0.00	0.00						
UNBUNDLED DEDICATED TRANSPORT																	
	INTEROFFICE CHANNEL - DEDICATED TRANSPORT																
		Interoffice Channel - 2-Wire Voice Grade - per mile			U1TVX	1L5XX	0.0059										
		Interoffice Channel - 2-Wire Voice Grade - Facility Termination			U1TVX	U1TV2	13.15	48.41	19.46	16.56	4.99						
		Interoffice Channel - 2-Wire Voice Grade Rev Bat. - per mile			U1TVX	1L5XX	0.0059										
		Interoffice Channel - 2-Wire VG Rev Bat. - Facility Termination			U1TVX	U1TR2	13.15	48.41	19.46	16.56	4.99						
		Interoffice Channel - 4-Wire Voice Grade - per mile			U1TVX	1L5XX	0.0059										
		Interoffice Channel - 4- Wire Voice Grade - Facility Termination			U1TVX	U1TV4	11.01	48.41	19.46	16.56	4.99						
		Interoffice Channel - 56 kbps - per mile			U1TDX	1L5XX	0.0059										
		Interoffice Channel - 56 kbps - Facility Termination			U1TDX	U1TD5	8.00	48.41	19.46	16.56	4.99						
		Interoffice Channel - 64 kbps - per mile			U1TDX	1L5XX	0.0059										
		Interoffice Channel - 64 kbps - Facility Termination			U1TDX	U1TD6	8.00	48.41	19.46	16.56	4.99						
		Interoffice Channel - DS1 - per mile			U1TD1	1L5XX	0.1199										
		Interoffice Channel - DS1 - Facility Termination			U1TD1	U1TF1	34.93	110.92	80.20	31.33	21.71						
		Interoffice Channel - DS3 - per mile			U1TD3	1L5XX	2.63										
		Interoffice Channel - DS3 - Facility Termination			U1TD3	U1TF3	349.42	320.16	86.24	66.71	52.76						
		Interoffice Channel - STS-1 - per mile			U1TS1	1L5XX	2.63										
		Interoffice Channel - STS-1 - Facility Termination			U1TS1	U1TFS	366.43	320.16	86.24	66.71	52.76						
	UNBUNDLED DARK FIBER																
		Dark Fiber - Interoffice Transport, Per Four Fiber Strands, Per Route Mile Or Fraction Thereof			UDF, UDFCX	1L5DF	24.17										
		Dark Fiber - Interoffice Transport, Per Four Fiber Strands, Per Route Mile Or Fraction Thereof			UDF, UDFCX	UDF14		1,774.79	89.66	73.57	18.69						
HIGH CAPACITY UNBUNDLED LOCAL LOOP																	
	DS-3/STS-1 UNBUNDLED LOCAL LOOP - Stand Alone																
		DS3 Unbundled Local Loop - per mile			UE3	1L5ND	11.40										
		DS3 Unbundled Local Loop - Facility Termination			UE3	UE3PX	258.44	1,751.51	131.77	112.80	75.81						
		STS-1Unbundled Local Loop - per mile			UDLSX	1L5ND	11.40										
		STS-1 Unbundled Local Loop - Facility Termination			UDLSX	UDLS1	311.51	1,751.51	131.77	112.80	75.81						
ENHANCED EXTENDED LINK (EELs)																	
	Network Elements Used in Combinations																
		2-Wire VG Loop (SL2) in Combination - Zone 1		1	UNCVX	UEAL2	13.32	195.75	36.35	18.40	6.86						
		2-Wire VG Loop (SL2) in Combination - Zone 2		2	UNCVX	UEAL2	18.66	195.75	36.35	18.40	6.86						
		2-Wire VG Loop (SL2) in Combination - Zone 3		3	UNCVX	UEAL2	36.33	195.75	36.35	18.40	6.86						
		4-Wire Analog Voice Grade Loop in Combination - Zone 1		1	UNCVX	UEAL4	21.04	195.75	36.35	18.40	6.86						
		4-Wire Analog Voice Grade Loop in Combination - Zone 2		2	UNCVX	UEAL4	24.49	195.75	36.35	18.40	6.86						
		4-Wire Analog Voice Grade Loop in Combination - Zone 3		3	UNCVX	UEAL4	33.40	195.75	36.35	18.40	6.86						
		2-Wire ISDN Loop in Combination - Zone 1		1	UNCNX	U1L2X	21.89	195.75	36.35	18.40	6.86						
		2-Wire ISDN Loop in Combination - Zone 2		2	UNCNX	U1L2X	25.27	195.75	36.35	18.40	6.86						
		2-Wire ISDN Loop in Combination - Zone 3		3	UNCNX	U1L2X	40.17	195.75	36.35	18.40	6.86						
		4-Wire 56Kbps Digital Grade Loop in Combination - Zone 1		1	UNCDX	UDL56	25.81	195.75	36.35	18.40	6.86						
		4-Wire 56Kbps Digital Grade Loop in Combination - Zone 2		2	UNCDX	UDL56	31.54	195.75	36.35	18.40	6.86						
		4-Wire 56Kbps Digital Grade Loop in Combination - Zone 3		3	UNCDX	UDL56	42.38	195.75	36.35	18.40	6.86						
		4-Wire 64Kbps Digital Grade Loop in Combination - Zone 1		1	UNCDX	UDL64	25.81	195.75	36.35	18.40	6.86						
		4-Wire 64Kbps Digital Grade Loop in Combination - Zone 2		2	UNCDX	UDL64	31.54	195.75	36.35	18.40	6.86						
		4-Wire 64Kbps Digital Grade Loop in Combination - Zone 3		3	UNCDX	UDL64	42.38	195.75	36.35	18.40	6.86						
		4-Wire DS1 Digital Loop in Combination - Zone 1		1	UNC1X	USLXX	49.41	209.25	70.37	37.87	6.86						

UNBUNDLED NETWORK ELEMENTS - Georgia														Attachement 2 Exh: A			
CATEGORY	RATE ELEMENTS	Interim	Zone	BCS	USOC	RATES($)					Svc Order Submitted Elec per LSR	Svc Order Submitted Manually per LSR	Incremental Charge - Manual Svc Order vs. Electronic-1st	Incremental Charge - Manual Svc Order vs. Electronic-Add'l	Incremental Charge - Manual Svc Order vs. Electronic-Disc 1st	Incremental Charge - Manual Svc Order vs. Electronic-Disc Add'l
							Nonrecurring		Nonrecurring Disconnect		OSS Rates($)					
						Rec	First	Add'l	First	Add'l	SOMEC	SOMAN	SOMAN	SOMAN	SOMAN	SOMAN
	4-Wire DS1 Digital Loop in Combination - Zone 2		2	UNC1X	USLXX	52.55	209.25	70.37	37.87	6.86						
	4-Wire DS1 Digital Loop in Combination - Zone 3		3	UNC1X	USLXX	68.40	209.25	70.37	37.87	6.86						
	DS3 Local Loop in combination - per mile			UNC3X	1L5ND	11.40										
	DS3 Local Loop in combination - Facility Termination			UNC3X	UE3PX	258.44	1,259.23	628.22	41.49	20.74						
	STS-1 Local Loop in combination - per mile			UNCSX	1L5ND	11.40										
	STS-1 Local Loop in combination - Facility Termination			UNCSX	UDLS1	311.51	1,259.23	628.22	41.49	20.74						
	Interoffice Channel in combination - 2-wire VG - per mile			UNCVX	1L5XX	0.0059										
	Interoffice Channel in combination - 2-wire VG - Facility Termination			UNCVX	U1TV2	13.15	66.47	33.57	43.38	27.57						
	Interoffice Channel in combination - 4-wire VG - per mile			UNCVX	1L5XX	0.0059										
	Interoffice Channel in combination - 4-wire VG - Facility Termination			UNCVX	U1TV4	11.01	66.47	33.57	43.38	27.57						
	Interoffice Channel in combination - 4-wire 56 kbps - per mile			UNCDX	1L5XX	0.0059										
	Interoffice Channel in combination - 4-wire 56 kbps - Facility Termination			UNCDX	U1TD5	8.00	66.47	33.57	43.38	27.57						
	Interoffice Channel in combination - 4-wire 64 kbps - per mile			UNCDX	1L5XX	0.0059										
	Interoffice Channel in combination - 4-wire 64 kbps - Facility Termination			UNCDX	U1TD6	8.00	66.47	33.57	43.38	27.57						
	Interoffice Channel in combination - DS1 - per mile			UNC1X	1L5XX	0.1199										
	Interoffice Channel in combination - DS1 Facility Termination			UNC1X	U1TF1	34.93	87.67	45.69	43.76	27.95						
	Interoffice Channel in combination - DS3 - per mile			UNC3X	1L5XX	2.63										
	Interoffice Channel in combination - DS3 - Facility Termination			UNC3X	U1TF3	349.42	325.59	76.99	49.51	32.85						
	Interoffice Channel in combination - STS-1 - per mile			UNCSX	1L5XX	2.63										
	Interoffice Channel in combination - STS-1 Facility Termination			UNCSX	U1TFS	366.43	325.59	76.99	49.51	32.85						
ADDITIONAL NETWORK ELEMENTS																
Optional Features & Functions:																
	DS1/DS0 Channel System			UNC1X	MQ1	71.23	86.01	0.00	0.00	0.00						
	DS3/DS1Channel System			UNC3X, UNCSX	MQ3	124.39	0.00	0.00	0.00	0.00						
	Voice Grade COCI in combination			UNCVX	1D1VG	0.479	27.30	2.90	16.85	1.04						
	Voice Grade COCI - for Stand Alone Local Loop			UEA	1D1VG	0.479	27.30	2.90	16.85	1.04						
	Voice Grade COCI - for connection to a channelized DS1 Local Channel in the same SWC as collocation			U1TUC	1D1VG	0.479	27.30	2.90	16.85	1.04						
	OCU-DP COCI (2.4-64kbs) in combination			UNCDX	1D1DD	1.02	27.30	2.90	16.85	1.04						
	OCU-DP COCI (2.4-64kbs) - for Stand Alone Local Loop			UDL	1D1DD	1.02	27.30	2.90	16.85	1.04						
	OCU-DP COCI (2.4-64kbs) - for connection to a channelized DS1 Local Channel in the same SWC as collocation			U1TUD	1D1DD	1.02	27.30	2.90	16.85	1.04						
	2-wire ISDN COCI (BRITE) in combination			UNCNX	UC1CA	1.70	27.30	2.90	16.85	1.04						
	2-wire ISDN COCI (BRITE) - for a Local Loop			UDN	UC1CA	1.70	27.30	2.90	16.85	1.04						
	2-wire ISDN COCI (BRITE) - for connection to a channelized DS1 Local Channel in the same SWC as collocation			U1TUB	UC1CA	1.70	27.30	2.90	16.85	1.04						
	DS1 COCI in combination			UNC1X	UC1D1	7.50	27.30	2.90	16.85	1.04						
	DS1 COCI - for Stand Alone Local Channel			ULDD1	UC1D1	7.50	27.30	2.90	16.85	1.04						
	DS1 COCI - for Stand Alone Interoffice Channel			U1TD1	UC1D1	7.50	27.30	2.90	16.85	1.04						
	DS1 COCI - for Stand Alone Local Loop			USL	UC1D1	7.50	27.30	2.90	16.85	1.04						
	DS1 COCI - for connection to a channelized DS1 Local Channel in the same SWC as collocation			U1TUA	UC1D1	7.50	27.30	2.90	16.85	1.04						
	Wholesale to UNE, Switch-As-Is Conversion Charge*			UNCVX, U1TVX, UNCDX, U1TDX, UNC1X, U1TD1,UNC3X, U1TD3, UNCSX, U1TS1, UDF,UDFCX	UNCCC		5.69	5.69	6.60	6.60						
Access to DCS - Customer Reconfiguration (FlexServ)																
	Customer Reconfiguration Establishment						1.40		1.63							
	DS1 DCS Termination with DS0 Switching					20.08	24.87	18.91	15.02	11.94						
	DS1 DCS Termination with DS1 Switching					7.24	18.16	12.19	11.13	8.05						
	DS3 DCS Termination with DS1 Switching					128.34	24.87	18.91	15.02	11.94						
COMMINGLING																

UNBUNDLED NETWORK ELEMENTS - Georgia														Attachement 2 Exh: A			
CATEGORY	RATE ELEMENTS	Interim	Zone	BCS	USOC	RATES($)					Svc Order Submitted Elec per LSR	Svc Order Submitted Manually per LSR	Incremental Charge - Manual Svc Order vs. Electronic-1st	Incremental Charge - Manual Svc Order vs. Electronic-Add'l	Incremental Charge - Manual Svc Order vs. Electronic-Disc 1st	Incremental Charge - Manual Svc Order vs. Electronic-Disc Add'l
							Nonrecurring		Nonrecurring Disconnect		OSS Rates($)					
						Rec	First	Add'l	First	Add'l	SOMEC	SOMAN	SOMAN	SOMAN	SOMAN	SOMAN
Commingled (UNE part of single bandwidth circuit)																
	Commingled VG COCI			XDV2X, NTCVG	1D1VG	0.479	27.30	2.90	16.85	1.04						
	Commingled Digital COCI			XDV6X, NTCUD	1D1DD	1.02	27.30	2.90	16.85	1.04						
	Commingled ISDN COCI			XDD4X	UC1CA	1.70	27.30	2.90	16.85	1.04						
	Commingled 2-wire VG Interoffice Channel			XDV2X	U1TV2	13.15	66.47	33.57	43.38	27.57						
	Commingled 4-wire VG Interoffice Channel			XDV6X	U1TV4	11.01	66.47	33.57	43.38	27.57						
	Commingled 56kbps Interoffice Channel			XDD4X	U1TD5	8.00	66.47	33.57	43.38	27.57						
	Commingled 64kbps Interoffice Channel			XDD4X	U1TD6	8.00	66.47	33.57	43.38	27.57						
	Commingled VG/DS0 Interoffice Channel Mileage			XDV2X, XDV6X, XDD4X	1L5XX	0.0059										
	Commingled 2-wire Local Loop Zone 1		1	XDV2X	UEAL2	13.32	195.75	36.35	18.40	6.86						
	Commingled 2-wire Local Loop Zone 2		2	XDV2X	UEAL2	18.66	195.75	36.35	18.40	6.86						
	Commingled 2-wire Local Loop Zone 3		3	XDV2X	UEAL2	36.33	195.75	36.35	18.40	6.86						
	Commingled 4-wire Local Loop Zone 1		1	XDV6X	UEAL4	21.04	195.75	36.35	18.40	6.86						
	Commingled 4-wire Local Loop Zone 2		2	XDV6X	UEAL4	24.49	195.75	36.35	18.40	6.86						
	Commingled 4-wire Local Loop Zone 3		3	XDV6X	UEAL4	33.40	195.75	36.35	18.40	6.86						
	Commingled 56kbps Local Loop Zone 1		1	XDD4X	UDL56	25.81	195.75	36.35	18.40	6.86						
	Commingled 56kbps Local Loop Zone 2		2	XDD4X	UDL56	31.54	195.75	36.35	18.40	6.86						
	Commingled 56kbps Local Loop Zone 3		3	XDD4X	UDL56	42.38	195.75	36.35	18.40	6.86						
	Commingled 64kbps Local Loop Zone 1		1	XDD4X	UDL64	25.81	195.75	36.35	18.40	6.86						
	Commingled 64kbps Local Loop Zone 2		2	XDD4X	UDL64	31.54	195.75	36.35	18.40	6.86						
	Commingled 64kbps Local Loop Zone 3		3	XDD4X	UDL64	42.38	195.75	36.35	18.40	6.86						
	Commingled ISDN Local Loop Zone 1		1	XDD4X	U1L2X	21.89	195.75	36.35	18.40	6.86						
	Commingled ISDN Local Loop Zone 2		2	XDD4X	U1L2X	25.27	195.75	36.35	18.40	6.86						
	Commingled ISDN Local Loop Zone 3		3	XDD4X	U1L2X	40.17	195.75	36.35	18.40	6.86						
	Commingled DS1 COCI			XDH1X, NTCD1	UC1D1	7.50	27.30	2.90	16.85	1.04						
	Commingled DS1 Interoffice Channel			XDH1X	U1TF1	34.93	87.67	45.69	43.76	27.95						
	Commingled DS1 Interoffice Channel Mileage			XDH1X	1L5XX	0.1199										
	Commingled DS1/DS0 Channel System			XDH1X	MQ1	71.23	86.01	0.00	0.00	0.00						
	Commingled DS1 Local Loop Zone 1		1	XDH1X	USLXX	49.41	209.25	70.37	37.87	6.86						
	Commingled DS1 Local Loop Zone 2		2	XDH1X	USLXX	52.55	209.25	70.37	37.87	6.86						
	Commingled DS1 Local Loop Zone 3		3	XDH1X	USLXX	68.40	209.25	70.37	37.87	6.86						
	Commingled DS3 Local Loop			HFQC6	UE3PX	258.44	1,751.51	131.77	112.80	75.81						
	Commingled DS3/STS-1 Local Loop Mileage			HFQC6, HFRST	1L5ND	11.40										
	Commingled STS-1 Local Loop			HFRST	UDLS1	311.51	1,751.51	131.77	112.80	75.81						
	Commingled DS3/DS1 Channel System			HFQC6	MQ3	124.39	0.00	0.00	0.00	0.00						
	Commingled DS3 Interoffice Channel			HFQC6	U1TF3	349.42	325.59	76.99	49.51	32.85						
	Commingled DS3 Interoffice Channel Mileage			HFQC6	1L5XX	2.63										
	Commingled STS-1Interoffice Channel			HFRST	U1TFS	366.43	325.59	76.99	49.51	32.85						
	Commingled STS-1Interoffice Channel Mileage			HFRST	1L5XX	2.63										
	Commingled Dark Fiber - Interoffice Transport, Per Four Fiber Strands, Per Route Mile Or Fraction Thereof			HEQDL	1L5DF	24.17										
	Commingled Dark Fiber - Interoffice Transport, Per Four Fiber Strands, Per Route Mile Or Fraction Thereof			HEQDL	UDF14		1,774.79	89.66	73.57	18.69						
SIGNALING (CCS7)																
	NOTE:"bk" beside a rate indicates that the parties have agreed to bill and keep for that element pursuant to the terms and conditions in Attachment 3.															
	CCS7 Signaling Usage, Per TCAP Message					0.0000536										
	CCS7 Signaling Usage, Per ISUP Message (same as E.3.3)					.0000134bk										
LNP Query Service																
	LNP Charge Per query					0.0008227										
	LNP Service Establishment Manual						12.47		11.07							
	LNP Service Provisioning with Point Code Establishment						574.30	293.39	251.23	184.73						
	*** NOTE: Switch-as-is rates are only applicable if agreement is TRO/TRRO Compliant**															

LOCAL INTERCONNECTION - Georgia													Attachment: 3 Exh: A			
CATEGORY	RATE ELEMENTS	Interim	Zone	BCS	USOC	RATES($)					Svc Order Submitted Elec per LSR	Svc Order Submitted Manually per LSR	Incremental Charge - Manual Svc Order vs. Electronic-1st	Incremental Charge - Manual Svc Order vs. Electronic-Add'l	Incremental Charge - Manual Svc Order vs. Electronic-Disc 1st	Incremental Charge - Manual Svc Order vs. Electronic-Disc Add'l
							Nonrecurring		Nonrecurring Disconnect		OSS Rates($)					
						Rec	First	Add'l	First	Add'l	SOMEC	SOMAN	SOMAN	SOMAN	SOMAN	SOMAN
LOCAL INTERCONNECTION (CALL TRANSPORT AND TERMINATION)																
	NOTE: "bk" beside a rate indicates that the Parties have agreed to bill and keep for that element pursuant to the terms and conditions in Attachment 3.															
	TANDEM SWITCHING															
	Tandem Switching Function Per MOU					0.0004186bk										
	Multiple Tandem Switching, per MOU (applies to intial tandem only)					0.0004186										
	Tandem Intermediary Charge, per MOU*					0.0025										
	* This charge is applicable only to transit traffic and is applied in addition to applicable switching and/or interconnection charges.															
	TRUNK CHARGE															
	Installation Trunk Side Service - per DS0			OHD	TPP6X		21.53	8.11								
	Installation Trunk Side Service - per DS0			OHD	TPP9X		21.53	8.11								
	Dedicated End Office Trunk Port Service-per DS0**			OHD	TDEOP	0.00										
	Dedicated End Office Trunk Port Service-per DS1**			OH1 OH1MS	TDE1P	0.00										
	Dedicated Tandem Trunk Port Service-per DS0**			OHD	TDWOP	0.00										
	Dedicated Tandem Trunk Port Service-per DS1**			OH1 OH1MS	TDW1P	0.00										
	** This rate element is recovered on a per MOU basis and is included in the End Office Switching and Tandem Switching, per MOU rate elements															
	COMMON TRANSPORT (Shared)															
	Common Transport - Per Mile, Per MOU					0.0000028bk										
	Common Transport - Facilities Termination Per MOU					0.0001955bk										
LOCAL INTERCONNECTION (DEDICATED TRANSPORT)																
	INTEROFFICE CHANNEL - DEDICATED TRANSPORT															
	Interoffice Channel - Dedicated Transport - 2-Wire Voice Grade - Per Mile per month			OHM	1L5NF	0.0059										
	Interoffice Channel - Dedicated Transport- 2- Wire Voice Grade - Facility Termination per month			OHM	1L5NF	13.15	48.41	19.46	16.56	4.99						
	Interoffice Channel - Dedicated Transport - 56 kbps - per mile per month			OHM	1L5NK	0.0059										
	Interoffice Channel - Dedicated Transport - 56 kbps - Facility Termination per month			OHM	1L5NK	8.00	48.41	19.46	16.56	4.99						
	Interoffice Channel - Dedicated Transport - 64 kbps - per mile per month			OHM	1L5NK	0.0059										
	Interoffice Channel - Dedicated Transport - 64 kbps - Facility Termination per month			OHM	1L5NK	8.00	48.41	19.46	16.56	4.99						
	Interoffice Channel - Dedicated Channel - DS1 - Per Mile per month			OH1, OH1MS	1L5NL	0.1199										
	Interoffice Channel - Dedicated Tranport - DS1 - Facility Termination per month			OH1, OH1MS	1L5NL	34.93	110.92	80.20	31.33	21.71						
	Interoffice Channel - Dedicated Transport - DS3 - Per Mile per month			OH3, OH3MS	1L5NM	2.63										
	Interoffice Channel - Dedicated Transport - DS3 - Facility Termination per month			OH3, OH3MS	1L5NM	349.42	320.16	86.24	66.71	52.76						
	LOCAL CHANNEL - DEDICATED TRANSPORT															
	Local Channel - Dedicated - 2-Wire Voice Grade per month			OHM	TEFV2	7.91	120.95	53.24	46.35	13.35						
	Local Channel - Dedicated - 4-Wire Voice Grade per month			OHM	TEFV4	8.90	125.50	54.38	46.35	13.35						
	Local Channel - Dedicated - DS1 per month			OH1	TEFHG	22.82	149.31	111.09	40.32	26.09						
	Local Channel - Dedicated - DS3 Facility Termination per month			OH3	TEFHJ	150.05	444.58	145.04	112.80	75.81						
	LOCAL INTERCONNECTION MID-SPAN MEET															
	Local Channel - Dedicated - DS1 per month			OH1MS	TEFHG	0.00	0.00									
	Local Channel - Dedicated - DS3 per month			OH3MS	TEFHJ	0.00	0.00									
	MULTIPLEXERS															
	Channelization - DS1 to DS0 Channel System			OH1, OH1MS	SATN1	71.23	105.57	41.55	23.73	4.19						
	DS3 to DS1 Channel System per month			OH3, OH3MS	SATNS	124.39	224.26	71.76	39.97	31.04						
	DS3 Interface Unit (DS1 COCI) per month			OH1, OH1MS	SATCO	7.50	15.79	11.38	6.60	6.60						
	Notes: If no rate is identified in the contract, the rates, terms, and conditions for the specific service or function will be as set forth in applicable BellSouth tariff.															
SIGNALING (CCS7)																
	NOTE:"bk" beside a rate indicates that the parties have agreed to bill and keep for that element pursuant to the terms and conditions in Attachment 3.															
	CCS7 Signaling Connection, Per 56Kbps Facility A-Link DS1			UDB	TPP6A	8.93	34.74	34.74	16.90	16.90						
	CCS7 Signaling Connection, Per 56Kbps Facility A-Link DS3			UDB	TPP9A	8.93	34.74	34.74	16.90	16.90						

LOCAL INTERCONNECTION - Georgia														Attachment: 3 Exh: A			
CATEGORY		RATE ELEMENTS	Interim	Zone	BCS	USOC	RATES($)					Svc Order Submitted Elec per LSR	Svc Order Submitted Manually per LSR	Incremental Charge - Manual Svc Order vs. Electronic-1st	Incremental Charge - Manual Svc Order vs. Electronic-Add'l	Incremental Charge - Manual Svc Order vs. Electronic-Disc 1st	Incremental Charge - Manual Svc Order vs. Electronic-Disc Add'l
								Nonrecurring		Nonrecurring Disconnect		OSS Rates($)					
							Rec	First	Add'l	First	Add'l	SOMEC	SOMAN	SOMAN	SOMAN	SOMAN	SOMAN
		CCS7 Signaling Connection, Per 56Kbps Facility B-Link DS1			UDB	TPP6B	8.93	34.74	34.74	16.90	16.90						
		CCS7 Signaling Connection, Per 56Kbps Facility B-Link DS3			UDB	TPP9B	8.93	34.74	34.74	16.90	16.90						
		CCS7 Signaling Termination, Per STP Port			UDB	PT8SX	111.30										
		CCS7 Signaling Usage, Per Call Setup Message					.0000134bk										
		CCS7 Signaling Usage, Per TCAP Message					0.0000536										
		CCS7 Signaling Usage, Per ISUP Message (same as E.3.3)					0.0000134bk										
		CCS7 Signaling Usage Surrogate, per link			UDB	STU56	921.93bk										
		CCS7 Signaling Point Code, Establishment or Change, per STP affected			UDB	CCAPO		28.12	28.12	33.29	33.29						
		CCS7 Signaling Connection, Switched access service, interface groups, transmissiom paths 6 DS1 level path with bit stream signaling			UDB	TPP6X	8.93	34.74	34.74	16.90	16.90						
		CCS7 Signaling Connection, Switched access service, interface groups, transmissiom paths 9 DS3 level path with bit stream signaling			UDB	TPP9X	8.93	34.74	34.74	16.90	16.90						

COLLOCATION - Georgia														Attachment: 4 Exh B			
CATEGORY		RATE ELEMENTS	Interim	Zone	BCS	USOC	RATES($)					Svc Order Submitted Elec per LSR	Svc Order Submitted Manually per LSR	Incremental Charge - Manual Svc Order vs. Electronic-1st	Incremental Charge - Manual Svc Order vs. Electronic-Add'l	Incremental Charge - Manual Svc Order vs. Electronic-Disc 1st	Incremental Charge - Manual Svc Order vs. Electronic-Disc Add'l
								Nonrecurring		Nonrecurring Disconnect		OSS Rates($)					
							Rec	First	Add'l	First	Add'l	SOMEC	SOMAN	SOMAN	SOMAN	SOMAN	SOMAN
PHYSICAL COLLOCATION																	
	Application																
		Physical Collocation - Initial Application Fee			CLO	PE1BA		1,284.72		0.59							
		Physical Collocation - Subsequent Application Fee			CLO	PE1CA		1,084.41		0.59							
	Space Preparation																
		Physical Collocation - Floor Space, per sq feet			CLO	PE1PJ	4.71										
		Physical Collocation - Space enclosure, welded wire, first 100 square feet			CLO	PE1BW	167.00										
		Physical Collocation - Space enclosure, welded wire, each additional 50 square feet			CLO	PE1CW	16.38										
		Physical Collocation - Space Preparation - C.O. Modification per square ft.			CLO	PE1SK	2.10										
		Physical Collocation - Space Preparation, Common Systems Modifications-Cageless, per square foot			CLO	PE1SL	2.27										
		Physical Collocation - Space Preparation - Common Systems Modifications-Caged, per cage			CLO	PE1SM	77.24										
		Physical Collocation - Space Preparation - Firm Order Processing			CLO	PE1SJ		140.96									
		Physical Collocation - Space Availability Report, per Central Office Requested			CLO	PE1SR		248.50									
	Power																
		Physical Collocation - Power, -48V DC Power - per Fused Amp Requested			CLO	PE1PL	4.84										
		Physical Collocation - Power, 120V AC Power, Single Phase, per Breaker Amp			CLO	PE1FB	5.16										
		Physical Collocation - Power, 240V AC Power, Single Phase, per Breaker Amp			CLO	PE1FD	10.34										
		Physical Collocation - Power, 120V AC Power, Three Phase, per Breaker Amp			CLO	PE1FE	15.50										
		Physical Collocation - Power, 277V AC Power, Three Phase, per Breaker Amp			CLO	PE1FG	35.79										
	Cross Connects (Cross Connects, Co-Carrier Cross Connects, and Ports)																
		Physical Collocation - 2-wire cross-connect, loop, provisioning			UEANL,UEQ, UNCNX, UEA, UCL, UAL, UHL, UDN, UNCVX	PE1P2	0.0202										
		Physical Collocation - 4-wire cross-connect, loop, provisioning			UEA, UHL, UNCVX, UNCDX, UCL, UDL	PE1P4	0.0403										
		Physical Collocation -DS1 Cross-Connect for Physical Collocation, provisioning			WDS1L, WDS1S, UXTD1, ULDD1, USLEL, UNLD1, U1TD1, UNC1X, UEPSR, UEPSB, UEPSE, UEPSP, USL, UEPEX, UEPDX	PE1P1	0.3807										
		Physical Collocation - DS3 Cross-Connect, provisioning			UE3, U1TD3, UXTD3, UXTS1, UNC3X, UNCSX, ULDD3, U1TS1, ULDS1, UNLD3, UEPEX, UEPDX, UEPSR, UEPSB, UEPSE, UEPSP	PE1P3	4.15										

COLLOCATION - Georgia													Attachment: 4 Exh B			
CATEGORY	RATE ELEMENTS	Interim	Zone	BCS	USOC	RATES($)					Svc Order Submitted Elec per LSR	Svc Order Submitted Manually per LSR	Incremental Charge - Manual Svc Order vs. Electronic-1st	Incremental Charge - Manual Svc Order vs. Electronic-Add'l	Incremental Charge - Manual Svc Order vs. Electronic-Disc 1st	Incremental Charge - Manual Svc Order vs. Electronic-Disc Add'l
							Nonrecurring		Nonrecurring Disconnect		OSS Rates($)					
						Rec	First	Add'l	First	Add'l	SOMEC	SOMAN	SOMAN	SOMAN	SOMAN	SOMAN
	Physical Collocation - 2-Fiber Cross-Connect			CLO, ULDO3, ULD12, ULD48, U1TO3, U1T12, U1T48, UDLO3, UDL12, UDF	PE1F2	1.76										
	Physical Collocation - 4-Fiber Cross-Connect			ULDO3, ULD12, ULD48, U1TO3, U1T12, U1T48, UDLO3, UDL12, UDF, UDFCX	PE1F4	3.38										
	Physical Collocation 2-Wire Cross Connect, Port			UEPSR, UEPSP, UEPSE, UEPSB, UEPSX, UEP2C	PE1R2	0.0202										
	Physical Collocation 4-Wire Cross Connect, Port			UEPEX, UEPDD	PE1R4	0.0403										
Security																
	Physical Collocation - Security Escort for Basic Time - normally scheduled work, per half hour			CLO	PE1BT		16.51	10.82								
	Physical Collocation - Security Escort for Overtime - outside of normally scheduled working hours on a scheduled work day, per half hour			CLO	PE1OT		21.90	14.17								
	Physical Collocation - Security Escort for Premium Time - outside of scheduled work day, per half hour			CLO	PE1PT		27.29	17.53								
	Physical Collocation - Security Access System - Security System per Central Office, per Sq. Ft.			CLO	PE1AY	0.011										
	Physical Collocation -Security Access System - New Card Activation, per Card Activation (First), per State			CLO	PE1A1		21.98									
	Physical Collocation-Security Access System-Administrative Change, existing Access Card, per Request, per State, per Card			CLO	PE1AA		5.37									
	Physical Collocation - Security Access System - Replace Lost or Stolen Card, per Card			CLO	PE1AR		16.99									
	Physical Collocation - Security Access - Initial Key, per Key			CLO	PE1AK		13.19									
	Physical Collocation - Security Access - Key, Replace Lost or Stolen Key, per Key			CLO	PE1AL		13.19									
Cable Records - Note: The rates in the First & Additional columns will actually be billed as "Initial I" and "Subsequent S" respectively																
	Physical Collocation - Cable Records, per request			CLO	PE1CR		I 742.92	S 477.59	125.63							
	Physical Collocation, Cable Records, VG/DS0 Cable, per cable record (maximum 3600 records)			CLO	PE1CD		317.29		177.60							
	Physical Collocation, Cable Records, VG/DS0 Cable, per each 100 pair			CLO	PE1CO		4.47		5.29							
	Physical Collocation, Cable Records, DS1, per T1 TIE			CLO	PE1C1		2.22		2.62							
	Physical Collocation, Cable Records, DS3, per T3 TIE			CLO	PE1C3		7.76		9.18							
	Physical Collocation - Cable Records, Fiber Cable, per cable record (maximum 99 records)			CLO	PE1CB		83.37		73.49							
	Physical Collocation, Cable Records,CAT5/RJ45			CLO	PE1C5		2.22		2.62							
Entrance Cable																
	Physical Collocation - Fiber Cable Installation, Pricing, non-recurring charge, per Entrance Cable			CLO	PE1BD		736.20		21.49							
	Physical Collocation - Fiber Cable Support Structure, per Entrance Cable			CLO	PE1PM	7.37										
	Physical Collocation, Entrance Cable Support Structure, Copper, per each 100 pairs or fraction thereof (CO Manhole to Collocation Space)			CLO	PE1EE	0.2686										
	Physical Collocation, Entrance Cable Installation, Copper, per Cable (CO Manhole to Collocation Space)			CLO	PE1EF		754.41		21.49							
	Physical Collocation, Entrance Cable Installation, Copper, per each 100 pairs or fraction thereof (CO Manhole to Collocation Space)			CLO	PE1EG		9.11									
VIRTUAL COLLOCATION																

COLLOCATION - Georgia														Attachment: 4 Exh B			
CATEGORY		RATE ELEMENTS	Interim	Zone	BCS	USOC	RATES($)					Svc Order Submitted Elec per LSR	Svc Order Submitted Manually per LSR	Incremental Charge - Manual Svc Order vs. Electronic-1st	Incremental Charge - Manual Svc Order vs. Electronic-Add'l	Incremental Charge - Manual Svc Order vs. Electronic-Disc 1st	Incremental Charge - Manual Svc Order vs. Electronic-Disc Add'l
								Nonrecurring		Nonrecurring Disconnect		OSS Rates($)					
							Rec	First	Add'l	First	Add'l	SOMEC	SOMAN	SOMAN	SOMAN	SOMAN	SOMAN
	Application																
		Virtual Collocation - Application Fee			AMTFS	EAF		608.92		0.59							
	Space Preparation																
		Virtual Collocation - Floor Space, per sq. ft.			AMTFS	ESPVX	4.71										
	Power																
		Virtual Collocation - Power, per fused amp			AMTFS	ESPAX	4.84										
	Cross Connects (Cross Connects, Co-Carrier Cross Connects, and Ports)																
		Virtual Collocation - 2-wire cross-connect, loop, provisioning			UEANL, UEA, UDN, UAL, UHL, UCL, UEQ, UNCVX, UNCDX, UNCNX	UEAC2	0.0192										
		Virtual Collocation - 4-wire cross-connect, loop, provisioning			UEA, UHL, UCL, UDL, UNCVX, UNCDX	UEAC4	0.0385										
		Virtual collocation - Special Access & UNE, cross-connect per DS1			ULR, UXTD1, UNC1X, ULDD1, U1TD1, USLEL, UNLD1, USL, UEPEX, UEPDX	CNC1X	0.3807										
		Virtual collocation - Special Access & UNE, cross-connect per DS3			USL, UE3, U1TD3, UXTS1, UXTD3, UNC3X, UNCSX, ULDD3, U1TS1, ULDS1, UDLSX, UNLD3	CND3X	4.15										
		Virtual Collocation - 2-Fiber Cross Connects			UDL12, UDLO3, U1T48, U1T12, U1TO3, ULDO3, ULD12, ULD48, UDF	CNC2F	1.76										
		Virtual Collocation - 4-Fiber Cross Connects			UDL12, UDLO3, U1T48, U1T12, U1TO3, ULDO3, ULD12, ULD48, UDF	CNC4F	3.53										
		Virtual Collocation 2-Wire Cross Connect, Port			UEPSX, UEPSB, UEPSE, UEPSP, UEPSR, UEP2C	VE1R2	0.0192										
		Virtual Collocation 4-Wire Cross Connect, Port			UEPDD, UEPEX	VE1R4	0.0385										
	Cable Records - Note: The rates in the First & Additional columns will actually be billed as "Initial I" & "Subsequent S" respectively																
		Virtual Collocation Cable Records - per request			AMTFS	VE1BA		742.92	477.59	125.63							
		Virtual Collocation Cable Records - VG/DS0 Cable, per cable record			AMTFS	VE1BB		317.29		177.60							
		Virtual Collocation Cable Records - VG/DS0 Cable, per each 100 pair			AMTFS	VE1BC		4.47		5.29							
		Virtual Collocation Cable Records - DS1, per T1TIE			AMTFS	VE1BD		2.22		2.62							
		Virtual Collocation Cable Records - DS3, per T3TIE			AMTFS	VE1BE		7.76		9.18							
		Virtual Collocation Cable Records - Fiber Cable, per 99 fiber records			AMTFS	VE1BF		83.37		73.49							
		Virtual Collocation Cable Records - CAT 5/RJ45			AMTFS	VE1B5		2.22		2.62							
	Security																
		Virtual collocation - Security escort, basic time, normally scheduled work hours			AMTFS	SPTBX		16.51	10.82								
		Virtual collocation - Security escort, overtime, outside of normally scheduled work hours on a normal working day			AMTFS	SPTOX		21.90	14.17								
		Virtual collocation - Security escort, premium time, outside of a scheduled work day			AMTFS	SPTPX		27.29	17.53								
	Maintenance																
		Virtual collocation - Maintenance in CO - Basic, per half hour			AMTFS	CTRLX		26.52	10.82								

COLLOCATION - Georgia														Attachment: 4 Exh B			
CATEGORY		RATE ELEMENTS	Interim	Zone	BCS	USOC	RATES($)					Svc Order Submitted Elec per LSR	Svc Order Submitted Manually per LSR	Incremental Charge - Manual Svc Order vs. Electronic-1st	Incremental Charge - Manual Svc Order vs. Electronic-Add'l	Incremental Charge - Manual Svc Order vs. Electronic-Disc 1st	Incremental Charge - Manual Svc Order vs. Electronic-Disc Add'l
								Nonrecurring		Nonrecurring Disconnect		OSS Rates($)					
							Rec	First	Add'l	First	Add'l	SOMEC	SOMAN	SOMAN	SOMAN	SOMAN	SOMAN
		Virtual collocation - Maintenance in CO - Overtime, per half hour			AMTFS	SPTOM		35.41	14.17								
		Virtual collocation - Maintenance in CO - Premium per half hour			AMTFS	SPTPM		44.30	17.53								
	Entrance Cable																
		Virtual Collocation - Cable Installation Charge, per cable			AMTFS	ESPCX		736.20		21.49							
		Virtual Collocation - Cable Support Structure, per cable			AMTFS	ESPSX	7.74										
		Virtual Collocation, Entrance Cable Support Structure, Copper, per each 100 pairs or fraction thereof (CO Manhole to Frame)			AMTFS	VE1EE	0.235										
		Virtual Collocation, Entrance Cable Installation, Copper, per Cable (CO Manhole to Frame)			AMTFS	VE1EF		754.41		21.49							
		Virtual Collocation, Entrance Cable Installation, Copper, per each 100 pairs or fraction thereof (CO Manhole to Frame)			AMTFS	VE1EG		9.11									
COLLOCATION IN THE REMOTE SITE																	
	Physical Remote Site Collocation																
		Physical Collocation in the Remote Site - Application Fee			CLORS	PE1RA		300.31		132.49							
		Cabinet Space in the Remote Site per Bay/ Rack			CLORS	PE1RB	148.11										
		Physical Collocation in the Remote Site - Security Access - Key			CLORS	PE1RD		13.19									
		Physical Collocation in the Remote Site - Space Availability Report per Premises Requested			CLORS	PE1SR		109.83									
		Physical Collocation in the Remote Site - Remote Site CLLI Code Request, per CLLI Code Requested			CLORS	PE1RE		36.00									
		Remote Site DLEC Data (BRSDD), per Compact Disk, per CO			CLORS	PE1RR		116.71									
		Physical Collocation - Security Escort for Basic Time - normally scheduled work, per half hour			CLORS	PE1BT		16.51	10.82								
		Physical Collocation - Security Escort for Overtime - outside of normally scheduled working hours on a scheduled work day, per half hour			CLORS	PE1OT		21.90	14.17								
		Physical Collocation - Security Escort for Premium Time - outside of scheduled work day, per half hour			CLORS	PE1PT		27.29	17.53								
	Virtual Remote Site Collocation																
		Virtual Collocation in the Remote Site - Application Fee			VE1RS	VE1RB		300.31		132.49							
		Virtual Collocation in the Remote Site - Per Bay/Rack of Space			VE1RS	VE1RC	148.11										
		Virtual Collocation in the Remote Site - Space Availability Report per Premises requested			VE1RS	VE1RR		109.83									
		Virtual Collocation in the Remote Site - Remote Site CLLI Code Request, per CLLI Code Requested			VE1RS	VE1RL		36.00									
ADJACENT COLLOCATION																	
		Adjacent Collocation - Space Charge per Sq. Ft.			CLOAC	PE1JA	0.1725										
		Adjacent Collocation - Electrical Facility Charge per Linear Ft.			CLOAC	PE1JC	4.12										
		Adjacent Collocation - 2-Wire Cross-Connects			UEANL,UEQ,UEA,UCL, UAL, UHL, UDN	PE1JE	0.0176										
		Adjacent Collocation - 4-Wire Cross-Connects			UEA,UHL,UDL,UCL	PE1JF	0.0353										
		Adjacent Collocation - DS1 Cross-Connects			USL	PE1JG	0.3686										
		Adjacent Collocation - DS3 Cross-Connects			UE3	PE1JH	4.83										
		Adjacent Collocation - 2-Fiber Cross-Connect			CLOAC	PE1JJ	1.69										
		Adjacent Collocation - 4-Fiber Cross-Connect			CLOAC	PE1JK	3.31										
		Adjacent Collocation - Application Fee			CLOAC	PE1JB		1,380.83		0.50							
		Adjacent Collocation - 120V, Single Phase Standby Power Rate per AC Breaker Amp			CLOAC	PE1JL	5.16										
		Adjacent Collocation - 240V, Single Phase Standby Power Rate per AC Breaker Amp			CLOAC	PE1JM	10.34										
		Adjacent Collocation - 120V, Three Phase Standby Power Rate per AC Breaker Amp			CLOAC	PE1JN	15.50										

COLLOCATION - Georgia														Attachment: 4 Exh B			
CATEGORY		RATE ELEMENTS	Interim	Zone	BCS	USOC	RATES($)					Svc Order Submitted Elec per LSR	Svc Order Submitted Manually per LSR	Incremental Charge - Manual Svc Order vs. Electronic-1st	Incremental Charge - Manual Svc Order vs. Electronic-Add'l	Incremental Charge - Manual Svc Order vs. Electronic-Disc 1st	Incremental Charge - Manual Svc Order vs. Electronic-Disc Add'l
								Nonrecurring		Nonrecurring Disconnect		OSS Rates($)					
							Rec	First	Add'l	First	Add'l	SOMEC	SOMAN	SOMAN	SOMAN	SOMAN	SOMAN
		Adjacent Collocation - 277V, Three Phase Standby Power Rate per AC Breaker Amp			CLOAC	PE1JO	35.79										

Amendment to the Agreement
Between
Neutral Tandem-Florida and Neutral Tandem-Georgia, LLC
and
BellSouth Telecommunications, Inc.
Dated February 25, 2005

Pursuant to this Amendment, (the "Amendment"), Neutral Tandem-Florida and Neutral Tandem-Georgia, LLC (Neutral Tandem), and BellSouth Telecommunications, Inc. (BellSouth), hereinafter referred to collectively as the "Parties," hereby agree to amend that certain Interconnection Agreement between the Parties dated February 25, 2005 (Agreement) to be effective thirty (30) calendar days after the date of the last signature executing the Amendment (Effective Date).

WHEREAS, BellSouth and Neutral Tandem entered into the Agreement on February 25, 2005, and;

NOW THEREFORE, in consideration of the mutual provisions contained herein and other good and valuable consideration, the receipt and sufficiency of which are hereby acknowledged, the Parties hereby covenant and agree as follows:

1. The Parties agree to replace the initial Section in the General Terms and Conditions with the following language:

   THIS AGREEMENT is made by and between BellSouth Telecommunications, Inc., (BellSouth), a Georgia corporation, and Neutral Tandem-Florida, LLC; Neutral Tandem-Georgia, LLC; Neutral Tandem-South Carolina, LLC and Neutral Tandem-Tennessee, LLC Collectively (Neutral Tandem), a Delaware corporation, and shall be effective on the Effective Date, as defined herein. This Agreement may refer to either BellSouth or Neutral Tandem or both as a "Party" or "Parties."

2. Delete Attachment 4, Collocation – Central Office, and Attachment 4, Collocation – Remote Site, in their entirety and replace with Attachment 4 - Collocation reflected as Exhibit 1, attached hereto and by reference incorporated into this Amendment.

3. Add the rates for South Carolina and Tennessee contained in Exhibit 2, attached hereto and by reference incorporated into this Amendment, to Attachment 1 - Resale Discounts & Rates.

4. Add the rates for South Carolina and Tennessee contained in Exhibit 3, attached hereto and by reference incorporated into this Amendment, to Attachment 2, Network Elements and Other Services Rates.

5. Add the rates for South Carolina and Tennessee contained in Exhibit 4, attached hereto and by reference incorporated into this Amendment, to Attachment 3, Network Interconnection Rates.

6. Add the rates for South Carolina and Tennessee contained in Exhibit 5, attached hereto and by reference incorporated into this Amendment, to Attachment 4, Collocation Rates .

7. All of the other provisions of the Agreement, dated February 25, 2005, shall remain in full force and effect.

8. Either or both of the Parties are authorized to submit this Amendment to the respective state regulatory authorities for approval subject to Section 252(e) of the Federal Telecommunications Act of 1996.

IN WITNESS WHEREOF, the Parties have executed this Amendment the day and year written below.

BellSouth Telecommunications, Inc.	**Neutral Tandem-Florida and Neutral Tandem-Georgia, LLC**
By:	By:
For Name: Kristen E. Shore	Name: DAVID TATAK
Title: Director	Title: VP BILLING
Date: 3/19/2007	Date: 3/15/07

Version: Generic Amendment Template

Attachment 4

BellSouth Collocation

Table of Contents

1. Scope of Attachment 3

2 Optional Reports 6

3 Collocation Options 7

4 Occupancy 12

5 Use of Collocation Space 14

6 Ordering and Preparation of Collocation Space 22

7 Construction and Provisioning 27

8 Rates and Charges 33

9 Insurance 45

10 Mechanics Lien 46

11 Inspections 47

12 Security and Safety Requirements 47

13 Destruction of Collocation Space 50

14 Eminent Domain 51

15 Nonexclusivity 51

Environmental & Safety Principles ..... Exhibit A

Rates ..... Exhibit B

BELLSOUTH COLLOCATION

1. Scope of Attachment

1.1 BellSouth Premises

1.1.1 The rates, terms and conditions contained within this Attachment shall only apply when Neutral Tandem is physically collocated as a sole occupant or as a Host within a BellSouth Premises pursuant to this Attachment. BellSouth Premises, as defined in this Attachment includes BellSouth Central Offices, and Remote Terminals (hereinafter "BellSouth Premises"). This Attachment is applicable to BellSouth Premises owned or leased by BellSouth. Where not specified, the language in this Attachment applies to both Central Office and Remote Site Collocation.

1.1.2 Third Party Property. If the BellSouth Premises, or the property on which it is located, is leased by BellSouth from a third party or otherwise controlled by a third party, special considerations and intervals may apply in addition to the terms and conditions of this Attachment. Additionally, where BellSouth notifies Neutral Tandem that BellSouth's agreement with a third party does not grant BellSouth the ability to provide access and use rights to others, upon Neutral Tandem's request, BellSouth will use commercially reasonable efforts to obtain the owner's consent and to otherwise secure such rights for Neutral Tandem. Neutral Tandem agrees to reimburse BellSouth for all costs incurred by BellSouth in obtaining such rights for Neutral Tandem. In cases where a third party agreement does not grant BellSouth the right to provide access and use rights to others as contemplated by this Attachment and BellSouth, is unable to secure such access and use rights for Neutral Tandem, Neutral Tandem shall be responsible for obtaining such permission to access and use such property. BellSouth shall cooperate with Neutral Tandem in obtaining such permission.

1.2 Right to Occupy

1.2.1 BellSouth shall offer to Neutral Tandem collocation on rates, terms and conditions that are just, reasonable, nondiscriminatory and consistent with the rules of the FCC. Subject to the rates, terms and conditions of this Attachment, where space is available and it is technically feasible, BellSouth will allow Neutral Tandem to occupy a certain area designated by BellSouth within a BellSouth Premises, or on BellSouth property upon which the BellSouth Premises is located, of a size which is specified by Neutral Tandem and agreed to by BellSouth (hereinafter "Collocation Space"). Except as otherwise specified, any references to Collocation Space shall be for physical collocation. The necessary rates, terms and conditions for a premises as defined by the FCC, other than BellSouth Premises, shall be negotiated upon reasonable request for collocation at such premises.

1.2.2 Neither BellSouth nor any of BellSouth's affiliates may reserve space for future use on more preferential terms than those set forth in this Attachment.

1.2.2.1 In all states other than Florida, the size specified by Neutral Tandem may contemplate a request for space sufficient to accommodate Neutral Tandem's growth within a twenty-four (24) month period.

1.2.2.2 In the state of Florida, the size specified by Neutral Tandem may contemplate a request for space sufficient to accommodate Neutral Tandem's growth within an eighteen (18) month period.

1.3 Space Allocation. BellSouth shall assign Neutral Tandem Collocation Space that utilizes existing infrastructure (e.g., heating, ventilation, air conditioning (HVAC), lighting and available power), if such space is available for collocation. Otherwise, BellSouth shall attempt to accommodate Neutral Tandem's requested space preferences, if any, including the provision of contiguous space for any subsequent request for collocation. In allocating Collocation Space, BellSouth shall not materially increase Neutral Tandem's cost or materially delay Neutral Tandem's occupation and use of the Collocation Space, assign Collocation Space that will impair the quality of service or otherwise limit the service Neutral Tandem wishes to offer, reduce unreasonably the total space available for physical collocation or preclude reasonable physical collocation within the BellSouth Premises. Space shall not be available for collocation if it is: (a) physically occupied by non-obsolete equipment; (b) assigned to another collocated telecommunications carrier; (c) used to provide physical access to occupied space; (d) used to enable technicians to work on equipment located within occupied space; (e) properly reserved for future use, either by BellSouth or another collocated telecommunications carrier; or (f) essential for the administration and proper functioning of the BellSouth Premises. BellSouth may segregate Collocation Space and require separate entrances for collocated telecommunications carriers to access their Collocation Space, pursuant to FCC Rules.

1.4 Transfer of Collocation Space

1.4.1 Neutral Tandem shall be allowed to transfer Collocation Space to another CLEC under the following conditions: (1) the BellSouth Premises is not at or near space exhaustion; (2) the transfer of space shall be contingent upon BellSouth's approval, which will not be unreasonably withheld; (3) Neutral Tandem has no unpaid, undisputed collocation charges; and (4) the transfer of the Collocation Space is in conjunction with Neutral Tandem's sale of all or substantially all, of the in-place collocation equipment to the same CLEC.

1.4.2 The responsibilities of Neutral Tandem shall include: (1) submitting a letter of authorization to BellSouth for the transfer; (2) entering into a transfer agreement with BellSouth and the acquiring CLEC; and (3) returning all Security Access Devices to BellSouth. The responsibilities of the acquiring CLEC shall include: (1) submitting an application to BellSouth for the transfer of the Collocation Space; (2) satisfying all requirements of its interconnection agreement with BellSouth; (3) submitting a letter to BellSouth for the assumption of services; and

(4) entering into a transfer agreement with BellSouth and Neutral Tandem.

1.4.3 In conjunction with a transfer of Collocation Space, any services associated with the Collocation Space shall be transferred pursuant to separately negotiated rates, terms and conditions.

1.5 Space Reclamation

1.5.1 In the event of space exhaust within a BellSouth Premises, BellSouth may include in its documentation for the Petition for Waiver filed with the Commission, any unutilized space in the BellSouth Premises. Neutral Tandem will be responsible for the justification of unutilized space within its Collocation Space, if the Commission requires such justification.

1.5.2 BellSouth may reclaim unused Collocation Space when a BellSouth Premises is at, or near, space exhaustion and Neutral Tandem cannot demonstrate that Neutral Tandem will utilize the Collocation Space in the time frames set forth below in Section 1.5.3. In the event of space exhaust or near exhaust within a BellSouth Premises, BellSouth will provide written notice to Neutral Tandem requesting that Neutral Tandem release non-utilized Collocation Space to BellSouth, when one hundred percent (100%) of the Collocation Space in Neutral Tandem's collocation arrangement is not being utilized.

1.5.3 Within twenty (20) days of receipt of written notification from BellSouth, Neutral Tandem shall either: (1) return the non-utilized Collocation Space to BellSouth in which case Neutral Tandem shall be relieved of all obligations for charges associated with that portion of the Collocation Space applicable from the date the Collocation Space is returned to BellSouth; or (2) for all states, with the exception of Florida, provide BellSouth with information demonstrating that the Collocation Space will be utilized within twenty-four (24) months from the date Neutral Tandem accepted the Collocation Space (Acceptance Date) from BellSouth. For Florida, Neutral Tandem shall provide information to BellSouth demonstrating that the Collocation Space will be utilized within eighteen (18) months from the Acceptance Date.

1.5.4 Disputes concerning BellSouth's claim of space exhaust, or near exhaust, or Neutral Tandem's refusal to return requested Collocation Space should be resolved by BellSouth and Neutral Tandem pursuant to the dispute resolution language contained in the General Terms and Conditions.

1.6 Use of Space. Neutral Tandem may only place in the Collocation Space equipment necessary for interconnection with BellSouth's services/facilities or for accessing BellSouth's unbundled network elements for the provision of Telecommunications Services, as specifically set forth in this Agreement. The Collocation Space assigned to Neutral Tandem may not be used for any purposes other than as specifically described herein, including, but not limited to office space or a place of reporting for Neutral Tandem's employees or certified

suppliers.

1.7 Rates and Charges. Neutral Tandem agrees to pay the rates and charges identified in Exhibit B.

1.8 Due Dates. If any due date contained in this Attachment falls on a weekend or a national holiday, then the due date will be the next business day thereafter. For intervals of ten (10) days or less, national holidays will be excluded. For purposes of this Attachment, national holidays include the following: New Year's Day, Martin Luther King, Jr. Day, President's Day (Washington's Birthday), Memorial Day, Independence Day, Labor Day, Columbus Day, Veteran's Day, Thanksgiving Day and Christmas Day.

1.9 Compliance. Subject to Section 24 of the General Terms and Conditions of this Agreement, the Parties agree to comply with all applicable federal, state, county, local and administrative laws, rules, ordinances, regulations and codes in the performance of their obligations hereunder.

2 Optional Reports

2.1 Space Availability Report. Upon request from Neutral Tandem and at Neutral Tandem's expense, BellSouth will provide a written report (Space Availability Report) describing in detail the space that is currently available for collocation at a particular BellSouth Premises. This report will include the amount of Collocation Space available at the BellSouth Premises requested, the number of collocators present at the BellSouth Premises, any modifications in the use of the space since the last report on the BellSouth Premises requested and the measures BellSouth is taking to make additional space available for collocation arrangements. A Space Availability Report does not reserve space at the BellSouth Premises for which the Space Availability Report was requested by Neutral Tandem.

2.1.1 The request from Neutral Tandem for a Space Availability Report must be in writing and include the BellSouth Premises street address, as identified in the LERG, and the CLLI code for the BellSouth Premises requested. CLLI code information is located in the NECA Tariff FCC No. 4.

2.1.2 BellSouth will respond to a request for a Space Availability Report for a particular BellSouth Premises within ten (10) days of the receipt of such request.

2.1.3 BellSouth will use commercially reasonable efforts to respond in ten (10) days to a Space Availability Report request when the request includes from two (2) to five (5) BellSouth Premises within the same state. The response time for Space Availability Report requests of more than five (5) BellSouth Premises, whether the request is for the same state or for two (2) or more states within the BellSouth Region, shall be negotiated between the Parties.

2.2 Remote Terminal Information. Upon request, BellSouth will provide Neutral Tandem with the following information concerning BellSouth's remote terminals:

(i) the address of the remote terminal; (ii) the CLLI code of the remote terminal; (iii) the carrier serving area of the remote terminal; (iv) the designation of which remote terminals subtend a particular central office; and (v) the number and address of customers that are served by a particular remote terminal.

2.2.1 BellSouth will provide this information within thirty (30) days of a Neutral Tandem request subject to the following conditions: (i) the information will only be provided on a CD in the same format in which it appears in BellSouth's systems; and (ii) the information will only be provided for each serving wire center designated by Neutral Tandem, up to a maximum of thirty (30) wire centers per Neutral Tandem request per month per state. BellSouth will bill the nonrecurring charge pursuant to the rates in Exhibit B at the time BellSouth sends the CD.

3 Collocation Options

3.1 Cageless Collocation. BellSouth shall allow Neutral Tandem to collocate Neutral Tandem's equipment and facilities without requiring the construction of a cage or similar structure. BellSouth shall allow Neutral Tandem to have direct access to Neutral Tandem's equipment and facilities in accordance with Section 5.1.2 below. BellSouth shall make cageless collocation available in single bay increments. Except where Neutral Tandem's equipment requires special technical considerations (e.g., special cable racking or isolated ground plane), BellSouth shall assign cageless Collocation Space in conventional equipment rack lineups where feasible. For equipment requiring special technical considerations, Neutral Tandem must provide the equipment layout, including spatial dimensions for such equipment pursuant to generic requirements contained in Telcordia GR-63-Core, and shall be responsible for compliance with all special technical requirements associated with such equipment.

3.2 Caged Collocation

3.2.1 BellSouth will make caged Collocation Space in Central Offices available in fifty (50) square foot increments. At Neutral Tandem's option and expense, Neutral Tandem will arrange with a Supplier certified by BellSouth (BellSouth Certified Supplier) to construct a collocation arrangement enclosure in accordance with BellSouth's specifications for a wire mesh enclosure prior to starting equipment installation. Where local building codes require enclosure specifications more stringent than BellSouth's wire mesh enclosure specifications, Neutral Tandem and Neutral Tandem's BellSouth Certified Supplier must comply with the more stringent local building code requirements. Neutral Tandem's BellSouth Certified Supplier shall be responsible for filing and obtaining any and all necessary permits and/or licenses for such construction. BellSouth or BellSouth's designated agent or contractor shall provide, at Neutral Tandem's expense, documentation, which may include existing building architectural drawings, enclosure drawings, specifications, etc., necessary for Neutral Tandem's BellSouth Certified Supplier to obtain all necessary permits and/or other licenses.

Neutral Tandem's BellSouth Certified Supplier shall bill Neutral Tandem directly for all work performed for Neutral Tandem. BellSouth shall have no liability for, nor responsibility to pay, such charges imposed by Neutral Tandem's BellSouth Certified Supplier. Neutral Tandem must provide the local BellSouth Central Office Building Contact with two (2) Access Keys that will allow entry into the locked enclosure. Except in the case of an emergency, BellSouth will not access Neutral Tandem's locked enclosure prior to notifying Neutral Tandem at least forty-eight (48) hours or two (2) business days, whichever is greater, before access to Neutral Tandem's Collocation Space is required. Upon request, BellSouth shall construct the enclosure for Neutral Tandem.

3.2.2 In the event Neutral Tandem's BellSouth Certified Supplier will construct the collocation arrangement enclosure, BellSouth may elect to review Neutral Tandem's plans and specifications, prior to allowing the construction to start, to ensure compliance with BellSouth's wire mesh enclosure specifications. BellSouth will notify Neutral Tandem of its desire to conduct this review in BellSouth's Application Response, as defined herein, to Neutral Tandem's Initial Application. If Neutral Tandem's Initial Application does not indicate its desire to construct its own enclosure and Neutral Tandem subsequently decides to construct its own enclosure prior to BellSouth's Application Response, then Neutral Tandem will resubmit its Initial Application, indicating its desire to construct its own enclosure. If Neutral Tandem subsequently decides construct its own enclosure after the bona fide firm order (hereinafter "BFFO") has been accepted by BellSouth, Neutral Tandem will submit a Subsequent Application, as defined in Section 6.2 below. If BellSouth elects to review Neutral Tandem's plans and specifications, then BellSouth will provide notification to Neutral Tandem within ten (10) days after the Initial Application BFFO date or, if a Subsequent Application is submitted as set forth in the preceding sentence, then the Subsequent Application BFFO date. BellSouth shall complete its review within fifteen (15) days after BellSouth's receipt of Neutral Tandem's plans and specifications. Regardless of whether or not BellSouth elects to review Neutral Tandem's plans and specifications, BellSouth reserves the right to inspect the enclosure after construction has been completed to ensure that it is constructed according to Neutral Tandem's submitted plans and specifications and/or BellSouth's wire mesh enclosure specifications, as applicable. If BellSouth decides to inspect the constructed Collocation Space, BellSouth will complete its inspection within fifteen (15) days after receipt of Neutral Tandem's written notification that the enclosure has been completed. Within seven (7) days after BellSouth has completed its inspection of Neutral Tandem's caged Collocation Space, BellSouth shall require Neutral Tandem, at Neutral Tandem's expense, to remove or correct any structure that does not meet Neutral Tandem's plans and specifications or BellSouth's wire mesh enclosure specifications, as applicable.

3.3 <u>Shared Caged Collocation</u>

3.3.1 Neutral Tandem may allow other telecommunications carriers to share Neutral

Tandem's caged Collocation Space, pursuant to the terms and conditions agreed to by Neutral Tandem (Host) and the other telecommunications carriers (Guests) contained in this Section, except where the BellSouth Premises is located within a leased space and BellSouth is prohibited by said lease from offering such an option to Neutral Tandem. BellSouth shall be notified in writing by Neutral Tandem upon the execution of any agreement between the Host and its Guest(s) prior to the submission of an application. Further, such notification shall include the name of the Guest(s), the term of the agreement, and a certification by Neutral Tandem that said agreement imposes upon the Guest(s) the same terms and conditions for Collocation Space as set forth in this Attachment between BellSouth and Neutral Tandem. The term of the agreement between the Host and its Guest(s) shall not exceed the term of this Agreement between BellSouth and Neutral Tandem.

3.3.2 Neutral Tandem, as the Host, shall be the sole interface and responsible Party to BellSouth for the assessment and billing of rates and charges contained within this Attachment and for the purposes of ensuring that the safety and security requirements of this Attachment are fully complied with by the Guest(s), its employees and agents. BellSouth shall provide Neutral Tandem with a pro-ration of the costs of the Collocation Space based on the number of collocators and the space used by each. There will be a minimum charge of one (1) bay/rack per Host/Guest. In addition to the above, for all states other than Florida, Neutral Tandem shall be the responsible Party to BellSouth for the purpose of submitting applications for initial and additional equipment placement for the Guest(s). In Florida, the Guest(s) may submit its own Initial Application and Subsequent Applications for equipment placement using the Host's ACNA. A separate Guest application shall result in the assessment of an Initial Application Fee or a Subsequent Application Fee, as set forth in Exhibit B, which will be billed to the Host on the date that BellSouth provides its written Application Response to the Guest(s) Bona Fide application.

3.3.3 Notwithstanding the foregoing, the Guest(s) may submit service orders directly to BellSouth to request the provisioning of interconnecting facilities between BellSouth and the Guest(s), the provisioning of services, and/or access to Network Elements. The bill for these interconnecting facilities, services and Network Elements will be charged to the Guest(s) pursuant to the applicable BellSouth Tariff or the Guest's Interconnection Agreement with BellSouth.

3.3.4 Neutral Tandem shall indemnify and hold harmless BellSouth from any and all claims, actions, causes of action, of whatever kind or nature arising out of the presence of Neutral Tandem's Guest(s) in the Collocation Space, except to the extent caused by BellSouth's sole negligence, gross negligence, or willful misconduct.

3.4 <u>Adjacent Collocation</u>

3.4.1 Subject to technical feasibility and space availability, BellSouth will permit an

adjacent collocation arrangement (Adjacent Arrangement) on BellSouth Premises' property only when space within the requested BellSouth Premises is legitimately exhausted and where the Adjacent Arrangement does not interfere with access to existing or planned structures or facilities on the BellSouth Premises' property. An Adjacent Arrangement shall be constructed or procured by Neutral Tandem or Neutral Tandem's BellSouth Certified Supplier and must be in conformance with the provisions of BellSouth's design and construction specifications. Further, Neutral Tandem shall construct, procure, maintain and operate said Adjacent Arrangement pursuant to all of the applicable rates, terms and conditions set forth in this Attachment.

3.4.2 If Neutral Tandem requests Adjacent Collocation, pursuant to the conditions stated in Section 3.4 above, Neutral Tandem must arrange with a BellSouth Certified Supplier to construct or procure the Adjacent Arrangement structure in accordance with BellSouth's specifications. BellSouth will provide the appropriate specifications upon request. Where local building codes require specifications more stringent than BellSouth's own specifications, Neutral Tandem and Neutral Tandem's BellSouth Certified Supplier shall comply with the more stringent local building code requirements. Neutral Tandem's BellSouth Certified Supplier shall be responsible for filing and obtaining any and all necessary zoning, permits and/or licenses for such construction. Neutral Tandem's BellSouth Certified Supplier shall bill Neutral Tandem directly for all work performed for Neutral Tandem to comply with this Attachment. BellSouth shall have no liability for, nor responsibility to pay such charges imposed by Neutral Tandem's BellSouth Certified Supplier. Neutral Tandem must provide the local BellSouth contact with two (2) cards, keys or other access devices used to gain entry into the locked enclosure. Except in the case of an emergency, BellSouth will not access Neutral Tandem's locked enclosure prior to notifying Neutral Tandem at least forty-eight (48) hours or two (2) business days, whichever is greater, before access to the Collocation Space is required.

3.4.3 Neutral Tandem must submit its Adjacent Arrangement construction plans and specifications to BellSouth when it places its Firm Order. BellSouth shall review Neutral Tandem's plans and specifications prior to the construction of an Adjacent Arrangement to ensure Neutral Tandem's compliance with BellSouth's specifications. BellSouth shall complete its review within fifteen (15) days after receipt of the plans and specifications from Neutral Tandem for the Adjacent Arrangement. BellSouth may inspect the Adjacent Arrangement during and after construction is completed to ensure that it is constructed according to Neutral Tandem's submitted plans and specifications. If BellSouth decides to inspect the completed Adjacent Arrangement, BellSouth will complete its inspection within fifteen (15) days after receipt of Neutral Tandem's written notification that the Adjacent Arrangement has been completed. Within seven (7) days after BellSouth has completed its inspection of Neutral Tandem's Adjacent Arrangement, BellSouth shall require Neutral Tandem, at Neutral Tandem's expense, to remove or correct any structure that does not meet its submitted plans

and specifications or BellSouth's specifications, as applicable.

3.4.4 Neutral Tandem shall provide a concrete pad, the structure housing the Adjacent Arrangement, HVAC, lighting and all of the facilities that are required to connect the structure (i.e., racking, conduits, etc.) to the BellSouth point of demarcation. At Neutral Tandem's option and where the local authority having jurisdiction permits, BellSouth shall provide an AC power source and access to physical Collocation services and facilities, subject to the same nondiscriminatory requirements as those applicable to any other physical Collocation arrangement.

3.5 Direct Connect

3.5.1 BellSouth will permit Neutral Tandem to directly interconnect between its own physical/virtual Collocation Spaces within the same BellSouth Premises (Direct Connect). Neutral Tandem shall contract with a BellSouth Certified Supplier to place the Direct Connect, which shall be provisioned using facilities owned by Neutral Tandem. A Direct Connect shall utilize BellSouth common cable support structure. There will be a recurring charge per linear foot, per cable, of the actual common cable support structure used by Neutral Tandem to provision the Direct Connect between its physical/virtual Collocation Spaces. In those instances where Neutral Tandem's physical/virtual Collocation Spaces are contiguous in the central office, Neutral Tandem will have the option of using Neutral Tandem's own technicians to deploy the Direct Connect using either electrical or optical facilities between its Collocation Spaces by constructing its own dedicated cable support structure. Neutral Tandem will deploy such electrical or optical connections directly between its own equipment without being routed through BellSouth's equipment or common cable support structure. Neutral Tandem may not self-provision a Direct Connect on any BellSouth distribution frame, Point of Termination (POT) Bay, Digital System Cross-Connect (DSX) panel or Light Guide Cross-Connect (LGX) panel. Neutral Tandem is solely responsible for ensuring the integrity of the signal.

3.5.2 To place an order for a Direct Connect, Neutral Tandem must submit an Initial Application or Subsequent Application to BellSouth. If no modification to the Collocation Space is requested other than the placement of a Direct Connect, the Co-Carrier Cross Connect/Direct Connect Application Fee for Direct Connect, as defined in Exhibit B, will apply. If other modifications are requested, in addition to the placement of a Direct Connect, either an Initial Application Fee or a Subsequent Application Fee will apply, pursuant to Section 6.2 below. BellSouth will bill this nonrecurring charge on the date that BellSouth provides an Application Response to Neutral Tandem.

3.6 Co-Carrier Cross Connect (CCXC)

3.6.1 A CCXC is a cross connection between Neutral Tandem and another collocated telecommunications carrier, other than BellSouth, in the same BellSouth Premises. Where technically feasible, BellSouth will permit Neutral Tandem to interconnect between its Collocation Space(s) and the physical/virtual collocation

space(s) of another collocated telecommunications carrier(s) within the same BellSouth Premises via a CCXC, pursuant to the FCC's Rules. The other collocated telecommunications carrier's agreement must also contain CCXC rates, terms and conditions before BellSouth will permit the provisioning of a CCXC between the two (2) collocated carriers. The applicable BellSouth charges will be assessed to Neutral Tandem upon Neutral Tandem's request for the CCXC. Neutral Tandem is prohibited from using the Collocation Space for the sole or primary purpose of cross-connecting to other collocated telecommunications carriers.

3.6.2 Neutral Tandem must contract with a BellSouth Certified Supplier to place the CCXC. The CCXC shall be provisioned using facilities owned by Neutral Tandem. Such cross-connections to other collocated telecommunications carriers may be made using either electrical or optical facilities. Neutral Tandem shall be responsible for providing a LOA, with the application, to BellSouth from the other collocated telecommunications carrier to which it will be cross-connecting. The CCXC shall utilize BellSouth common cable support structure. There will be a recurring charge per linear foot, per cable, of the common cable support structure used by Neutral Tandem to provision the CCXC to the other collocated telecommunications carrier. In those instances where Neutral Tandem's equipment and the equipment of the other collocated telecommunications carrier are located in contiguous caged Collocation Space, Neutral Tandem may use its own technicians to install the CCXC using either electrical or optical facilities between the equipment of both collocated telecommunications carriers by constructing a dedicated cable support structure between the two (2) contiguous cages. Neutral Tandem shall deploy such electrical or optical cross-connections directly between its own equipment and the equipment of the other collocated telecommunications carrier without being routed through BellSouth's equipment or, in the case of a CCXC provisioned between contiguous collocation spaces, common cable support structure. Neutral Tandem shall not provision CCXC on any BellSouth distribution frame, POT Bay, DSX panel or LGX panel. Neutral Tandem is solely responsible for ensuring the integrity of the signal.

3.6.3 To place an order for a CCXC, Neutral Tandem must submit an application to BellSouth. If no modification to the Collocation Space is requested other than the placement of a CCXC, the Co-Carrier Cross Connect/Direct Connect Application Fee for a CCXC, as defined in Exhibit B, will apply. If other modifications are requested, in addition to the placement of a CCXC, either an Initial Application or a Subsequent Application Fee will apply, pursuant to Section 6.2 below. BellSouth will bill this nonrecurring charge on the date that it provides an Application Response to Neutral Tandem.

4 Occupancy

4.1 Space Ready Notification. BellSouth will notify Neutral Tandem in writing when the Collocation Space is ready for occupancy (Space Ready Date).

4.2 Acceptance Walkthrough. Neutral Tandem will schedule and complete an acceptance walkthrough of new or additional provisioned Collocation Space with BellSouth within fifteen (15) days after the Space Ready Date. BellSouth will correct any identified deviations from Neutral Tandem's original or jointly amended application within seven (7) days after the walkthrough, unless the Parties mutually agree upon a different time frame. BellSouth will then establish a new Space Ready Date. Another acceptance walkthrough will be scheduled and conducted within fifteen (15) days after the new Space Ready Date. This follow-up acceptance walkthrough will be limited to only those deviations identified in the initial walkthrough. If Neutral Tandem completes its acceptance walkthrough within the fifteen (15) day interval associated with the applicable Space Ready Date, billing will begin upon the date of Neutral Tandem's acceptance of the Collocation Space (Space Acceptance Date). In the event Neutral Tandem fails to complete an acceptance walkthrough within the fifteen (15) day interval associated with the applicable Space Ready Date, the Collocation Space shall be deemed accepted by Neutral Tandem on the Space Ready Date and billing will commence from that date.

4.3 Early Space Acceptance. If Neutral Tandem decides to occupy the Collocation Space prior to the Space Ready Date, the date Neutral Tandem executes the Agreement for Customer Access and Acceptance to Unfinished Collocation Space is the date that will be deemed the Space Acceptance Date and billing will begin from that date.

4.4 Equipment Installation. Neutral Tandem shall notify BellSouth in writing that its collocation equipment installation is complete. Neutral Tandem's collocation equipment installation is complete when Neutral Tandem's equipment is connected to BellSouth's network for the purpose of provisioning Telecommunication Services to Neutral Tandem's customers. BellSouth may refuse to accept any orders for cross-connects until it has received such notice from Neutral Tandem.

4.5 Termination of Occupancy.

4.5.1 In addition to any other provisions addressing termination of occupancy in this Agreement, Neutral Tandem may terminate its occupancy of a particular Collocation Space by submitting a Subsequent Application requesting termination of occupancy for such Collocation Space. Such termination shall be effective upon BellSouth's acceptance of the Space Relinquishment Form. Billing for monthly recurring charges will cease on the date that Neutral Tandem and BellSouth conduct an inspection of the terminated space and jointly sign off on the Space Relinquishment Form or on the date that Neutral Tandem signs off on the Space Relinquishment Form and sends this form to BellSouth, provided no discrepancies are found during BellSouth's subsequent inspection of the terminated space. If the subsequent inspection by BellSouth reveals any discrepancies, billing will cease on the date that BellSouth and Neutral Tandem jointly conduct an inspection, confirming that Neutral Tandem has corrected all of

the noted discrepancies identified by BellSouth. A Subsequent Application Fee will not apply for the termination of occupancy; however, specific disconnect fees may apply to the services terminating to such Collocation Space. The particular disconnect fees that would apply in each state are contained in Exhibit B.

4.5.2 Upon termination of occupancy, Neutral Tandem, at its sole expense, shall remove its equipment and any other property owned, leased or controlled by Neutral Tandem from the Collocation Space. Neutral Tandem shall have thirty (30) days from the Bona Fide Firm Order (BFFO) date (Termination Date) to complete such removal, including the removal of all equipment and facilities of Neutral Tandem's Guest(s), unless Neutral Tandem's Guest(s) has assumed responsibility for the Collocation Space housing the Guest(s)'s equipment and executed the appropriate documentation required by BellSouth to transfer the Collocation Space to the Guest(s) prior to Neutral Tandem's Termination Date.

4.5.3 Neutral Tandem shall continue the payment of all monthly recurring charges to BellSouth until the date Neutral Tandem, and if applicable Neutral Tandem's Guest(s), has fully vacated the Collocation Space and the Space Relinquishment Form has been accepted by BellSouth. If Neutral Tandem or Neutral Tandem's Guest(s) fails to vacate the Collocation Space within thirty (30) days from the Termination Date, BellSouth shall have the right to remove and dispose of the equipment and any other property of Neutral Tandem or Neutral Tandem's Guest(s), in any manner that BellSouth deems fit, at Neutral Tandem's expense and with no liability whatsoever for Neutral Tandem's property or Neutral Tandem's Guest(s) property.

4.5.4 Upon termination of Neutral Tandem's right to occupy specific Collocation Space, the Collocation Space will revert back to BellSouth's central office space inventory. Neutral Tandem shall surrender the Collocation Space to BellSouth in the same condition as when it was first occupied by Neutral Tandem, with the exception of ordinary wear and tear, unless otherwise agreed to by the Parties. Neutral Tandem's BellSouth Certified Supplier shall be responsible for updating and making any necessary changes to BellSouth's records as required by BellSouth specifications including, but not limited to, BellSouth's Central Office Record Drawings and ERMA Records. Neutral Tandem shall be responsible for the cost of removing any Neutral Tandem constructed enclosure, as well as any supporting structures (e.g., racking, conduits, power cables, etc.), by the Termination Date and restoring the grounds to their original condition.

5 Use of Collocation Space

5.1 Equipment Type

5.1.1 BellSouth shall permit the collocation and use of any equipment necessary for interconnection to BellSouth's network and/or access to BellSouth's unbundled network elements in the provision of Telecommunications Services, as the term "necessary" is defined by FCC 47 C.F.R. § 51.323 (b). The primary purpose and function of any equipment collocated in a BellSouth Premises must be for

interconnection to BellSouth's network or access to BellSouth's unbundled network elements in the provision of Telecommunications Services. Equipment is necessary for interconnection if an inability to deploy that equipment would, as a practical, economical, or operational matter, preclude the requesting carrier from obtaining interconnection with BellSouth at a level equal in quality to that which BellSouth obtains within its own network or what BellSouth provides to any affiliate, subsidiary, or other party.

5.1.2 Examples of equipment that would not be considered necessary include, but are not limited to: traditional circuit switching equipment, equipment used exclusively for call-related databases, computer servers used exclusively for providing information services, OSS equipment used to support collocated telecommunications carrier network operations, equipment that generates customer orders, manages trouble tickets or inventory, or stores customer records in centralized databases, etc. BellSouth will determine upon receipt of an application if the requested equipment is necessary based on the criteria established by the FCC. Multifunctional equipment placed on a BellSouth Premises must not place any greater relative burden on BellSouth's property than comparable single-function equipment. BellSouth reserves the right to allow the collocation of any equipment on a nondiscriminatory basis.

5.1.3 Such equipment must, at a minimum, meet the following Telcordia Network Equipment Building Systems (NEBS) General Equipment Requirements: for Central Offices Criteria Level 1 requirements as outlined in Telcordia Special Report SR-3580, Issue 1 and for Remote Sites Criteria Level 3 requirements as outlined in the Telcordia Special report SR-3580, Issue 1. Except where otherwise required by a Commission, BellSouth shall comply with the applicable FCC rules relating to denial of collocation equipment based on Neutral Tandem's failure to comply with this Section.

5.1.3.1 To the extent Neutral Tandem wishes to place equipment in its collocation that does not meet the standards set forth in 5.1.3, Neutral Tandem may request in writing, pursuant to the Notices section of the General Terms & Conditions, a waiver to such standards. BellSouth may provide a waiver in its sole discretion.

5.1.4 At a Remote Site, all Neutral Tandem equipment installation shall comply with BellSouth TR 73503-11h, "Grounding - Engineering Procedures". Metallic cable sheaths and metallic strength members of optical fiber cables as well as the metallic cable sheaths of all copper conductor cables shall be bonded to the designated grounding bus for the Remote Site Location. All copper conductor pairs, working and non-working, shall be equipped with a solid-state protector unit (over-voltage protection only), which has been listed by a nationally recognized testing laboratory.

5.2 Terminations. Neutral Tandem shall not request more DS0, DS1, DS3 and/or optical terminations for a collocation arrangement than the total port or termination capacity of the equipment physically installed in the Collocation

Space. The total capacity of the equipment collocated in the Collocation Space will include equipment contained in an application, as well as any equipment already placed in the Collocation Space. If full network termination capacity of the equipment being installed is not requested in the application submitted by Neutral Tandem, additional network terminations for the installed equipment will require the submission of a Subsequent Application. In the event Neutral Tandem submits an application for terminations that will exceed the total capacity of the collocated equipment, Neutral Tandem will be informed of the discrepancy by BellSouth and required to submit a revision to the application.

5.3 Security Interest in Equipment. Commencing with the most current calendar quarter after the Effective Date of this Agreement, and thereafter with respect to each subsequent calendar quarter during the term of this Agreement, Neutral Tandem will, no later than thirty (30) days after the close of such calendar quarter, provide a report to ICS Collocation Product Management, Room 34th Floor, 675 W. Peachtree Street, Atlanta, Georgia 30375, listing any equipment in the Collocation Space (i) that was added during the calendar quarter to which such report pertains, and (ii) for which there is a UCC-1 lien holder or to another entity that has a secured financial interest in such equipment (Secured Equipment). If no Secured Equipment has been installed within a given calendar quarter, no report shall be due hereunder in connection with such calendar quarter.

5.4 No Marketing. Neutral Tandem shall not use the Collocation Space for marketing purposes, nor shall it place any identifying signs or markings outside the Collocation Space or on the grounds of the BellSouth Premises.

5.5 Equipment Identification. Neutral Tandem shall place a plaque or affix other identification (e.g., stenciling or labeling) to each piece of Neutral Tandem's equipment, including the appropriate emergency contacts with their corresponding telephone numbers, in order for BellSouth to properly identify Neutral Tandem's equipment in the case of an emergency. For caged Collocation Space, such identification must be placed on a plaque affixed to the outside of the caged enclosure.

5.6 Entrance Facilities.

5.6.1 Neutral Tandem may elect to place Neutral Tandem-owned or Neutral Tandem leased fiber entrance facilities into its Collocation Space. BellSouth will designate the point of interconnection in close proximity to the BellSouth Premises housing the Collocation Space, such as at an entrance manhole or a cable vault for Central Offices, which is physically accessible by both Parties. For Central Offices, Neutral Tandem will provide and place fiber cable in the entrance manhole of sufficient length to be pulled through conduit and into the splice location. Neutral Tandem will provide and install a sufficient length of fire retardant riser cable, to which BellSouth will splice the entrance cable. The fire retardant riser cable will extend from the splice location to Neutral Tandem's equipment in Neutral Tandem's Collocation Space. In the event Neutral Tandem

utilizes a non-metallic, riser-type entrance facility, a splice will not be required. For Remote Terminals Neutral Tandem will provide and place copper cable through conduit from the Remote Site Collocation Space to the feeder distribution interface. Such copper cable must be of sufficient length to reach the splice location for splicing by BellSouth. Neutral Tandem must contact BellSouth for authorization and instruction prior to placing any entrance facility cable in an entrance manhole or cable vault. Neutral Tandem is responsible for the maintenance of the entrance facilities. Nonrecurring charges for cable installation will be assessed on a per cable basis as set forth in Exhibit B upon receipt of Neutral Tandem's BFFO. Recurring charges for the cable support structure will be billed at the rates set forth in Exhibit B.

5.6.2 Central Office Microwave Transmission Facilities. At Neutral Tandem's request, BellSouth will accommodate, where technically feasible and space is available, a microwave entrance facility, pursuant to separately negotiated rates, terms and conditions.

5.6.3 Central Office Copper and Coaxial Cable Entrance Facilities. In Florida and Georgia, BellSouth shall permit Neutral Tandem to use copper or coaxial cable entrance facilities, if approved by the Commission, but only in those rare instances where Neutral Tandem demonstrates a necessity and entrance capacity is not at or near exhaust in a particular BellSouth Premises in which Neutral Tandem's Collocation Space is located. In Florida, Neutral Tandem must have approval by the Commission before it submits a request for copper entrance facilities. Notwithstanding the foregoing, in the case of adjacent collocation, copper facilities may be used between the adjacent collocation arrangement and the central office demarcation point, unless BellSouth determines that limited space is available for the placement of these entrance facilities.

5.7 Dual Entrance Facilities at a Central Office. BellSouth will provide at least two (2) interconnection points at each Central Office where at least two (2) such interconnection points are available and capacity exists. Upon receipt of a request by Neutral Tandem for dual entrance facilities to its physical Collocation Space, BellSouth shall provide Neutral Tandem with information regarding BellSouth's capacity to accommodate the requested dual entrance facilities. If conduit in the serving manhole(s) is available and is not reserved for another purpose or for utilization within twelve (12) months of the receipt of an application for collocation, BellSouth will make the requested conduit space available for the installation of a second entrance facility to Neutral Tandem's Collocation Space. The location of the serving manhole(s) will be determined at the sole discretion of BellSouth. Where dual entrance facilities are not available due to a lack of capacity, BellSouth will provide this information to Neutral Tandem in the Application Response.

5.8 Shared Use

5.8.1 Neutral Tandem may utilize spare capacity on an existing telecommunications

carrier's entrance facility for the purpose of obtaining an entrance facility to Neutral Tandem's Collocation Space within the same BellSouth Premises.

5.8.2 BellSouth shall allow the splice, as long as the fiber is non-working dark fiber. Neutral Tandem must arrange with BellSouth in accordance with BellSouth's Special Construction Procedures, RL93-11-030BT, and provide a LOA from the other telecommunications carrier authorizing BellSouth to perform the splice of the Neutral Tandem-provided riser cable to the spare capacity on the other telecommunications carrier's entrance facility. If Neutral Tandem desires to allow another telecommunications carrier to use its entrance facilities, the telecommunications carrier must arrange with BellSouth in accordance with BellSouth's Special Construction Procedures, RL93-11-030BT, and provide a LOA from Neutral Tandem authorizing BellSouth to perform the splice of the telecommunications carrier's provided riser cable to the spare capacity on Neutral Tandem's entrance facility.

5.9 Demarcation Point

5.9.1 In Tennessee, if Neutral Tandem elects the Tennessee Regulatory Authority (TRA) rates as set forth in Exhibit C, the additional language also set forth in Exhibit C for Demarcation Point, will be effective in conjunction with the remaining terms and conditions of this Attachment.

5.9.2 BellSouth will designate the point(s) of demarcation between Neutral Tandem's equipment and/or network facilities and BellSouth's network facilities. For 2-wire and 4-wire connections, the demarcation point shall be a common block on the BellSouth designated conventional distribution frame. Neutral Tandem shall be responsible for providing the common block and cabling and Neutral Tandem's BellSouth Certified Supplier shall be responsible for installing and properly labeling/stenciling the common block and any necessary cabling identified in Section 7 below. For DS1, DS3, STS1, and optical terminations, BellSouth shall designate, provide, and install demarcation point hardware on a per arrangement basis. Neutral Tandem shall be responsible for providing, and Neutral Tandem's BellSouth Certified Supplier shall be responsible for installing any necessary cabling and properly labeling/stenciling the demarcation point hardware for terminations identified in Section 7 below.

5.9.3 Neutral Tandem or its agent must install, maintain and operate the equipment/facilities on its side of the demarcation point, pursuant to Section 5.10 below and may self-provision cross-connects that may be required within its own Collocation Space to activate service requests.

5.10 Equipment and Facilities. Neutral Tandem, or if required by this Attachment, Neutral Tandem's BellSouth Certified Supplier, is solely responsible for the design, engineering, installation, testing, provisioning, performance, monitoring and maintenance/repair of the equipment and network facilities used by Neutral Tandem, which must be performed in compliance with all applicable BellSouth specifications. Such equipment and network facilities may include, but are not

limited to, cable(s), equipment, and POT connections. Neutral Tandem and its designated BellSouth Certified Supplier must follow and comply with all BellSouth specifications outlined in the following BellSouth Technical Requirements: TR 73503, TR 73519, TR 73572 and TR 73564.

5.11 BellSouth's Access to Collocation Space

5.11.1 From time to time, BellSouth may require access to Neutral Tandem's Collocation Space. BellSouth retains the right to access Neutral Tandem's Collocation Space for the purpose of making BellSouth equipment and building modifications (e.g., installing, altering or removing racking, ducts, electrical wiring, HVAC, and cabling). In such cases, BellSouth will give notice to Neutral Tandem at least forty-eight (48) hours before access to Neutral Tandem's Collocation Space is required. Neutral Tandem may elect to be present whenever BellSouth performs work in the Neutral Tandem's Collocation Space. The Parties agree that Neutral Tandem will not bear any of the expense associated with this type of work.

5.11.2 In the case of an emergency, BellSouth will provide oral notice of entry as soon as reasonably practicable after such entry.

5.11.3 Neutral Tandem must provide the local BellSouth Central Office Building Contact with two (2) Access Devices that will allow BellSouth entry into any enclosed and locked Collocation Space including, but not limited to, an Adjacent Arrangement, pursuant to the requirements contained in this Section.

5.12 Neutral Tandem's Access

5.12.1 Pursuant to Section 12 below, Neutral Tandem shall have access to its Collocation Space twenty-four (24) hours a day, seven (7) days a week. Neutral Tandem agrees to provide the name, date of birth and either the social security number or driver's license number of each employee, supplier or agent of Neutral Tandem or Neutral Tandem's Guest(s) with Neutral Tandem's written request for access keys or cards (Access Devices) for specific BellSouth Premises, prior to the issuance of said Access Devices, using Form RF-2906-C, the "CLEC and CLEC Certified Supplier Access Request and Acknowledgement" form. The appropriate key acknowledgement forms (the "Collocation Acknowledgement Sheet" for access cards and the "Key Acknowledgement Form" for keys) must be signed by Neutral Tandem and returned to BellSouth Access Management within fifteen (15) days of Neutral Tandem's receipt of these forms. Failure to return these properly acknowledged forms will result in the subsequent access key or card requests being held by BellSouth until the proper acknowledgement documents have been received by BellSouth and reflect current information. Charges for Security Access System and for Security Access Devices will be billed at the rates set forth in Exhibit B. Access Devices may not be duplicated under any circumstances. Neutral Tandem agrees to be responsible for all Access Devices and for the return of all Access Devices in the possession of Neutral Tandem's employees, suppliers, agents or Guests after termination of the employment relationship, the

contractual obligation with Neutral Tandem ends, upon the termination of this Agreement, or upon the termination of occupancy of Collocation Space in a specific BellSouth Premises. Neutral Tandem shall pay all applicable charges associated with lost or stolen Access Devices.

5.12.2 Neutral Tandem must submit to BellSouth the completed Access Control Request Form for all employees, suppliers, agents or Guests requiring access to a BellSouth Premises at least thirty (30) days prior to the date Neutral Tandem desires to gain access to the Collocation Space. In order to permit reasonable access during construction of the Collocation Space, Neutral Tandem may submit a request for its one (1) free accompanied site visit to its designated Collocation Space at any time subsequent to BellSouth's receipt of the BFFO. In the event Neutral Tandem desires access to its designated Collocation Space after the first accompanied free visit and Neutral Tandem's access request form(s) has not been approved by BellSouth or Neutral Tandem has not yet submitted an access request form to BellSouth, Neutral Tandem shall be permitted to access the Collocation Space accompanied by a BellSouth security escort, at Neutral Tandem's expense, which will be assessed pursuant to the Security Escort fees contained in Exhibit B. Neutral Tandem must request that escorted access be provided by BellSouth to Neutral Tandem's designated Collocation Space at least three (3) business days prior to the date such access is desired. A BellSouth security escort will be required whenever Neutral Tandem or its approved agent or supplier requires access to the entrance manhole.

5.13 Lost or Stolen Access Devices. Neutral Tandem shall immediately notify BellSouth in writing when any of its Access Devices have been lost or stolen. If it becomes necessary for BellSouth to re-key buildings or deactivate an Access Device as a result of a lost or stolen Access Device(s) or for failure of Neutral Tandem's employees, suppliers, agents or Guest(s) to return an Access Device(s), Neutral Tandem shall pay for the costs of re-keying the building or deactivating the Access Device(s).

5.14 Interference or Impairment

5.14.1 Notwithstanding any other provisions of this Attachment, Neutral Tandem shall not use any product or service provided under this Agreement, any other service related thereto or used in combination therewith, or place or use any equipment or facilities in any manner that (1) significantly degrades, interferes with or impairs service provided by BellSouth or any other entity or any person's use of its telecommunications services; (2) endangers or damages the equipment, facilities or any other property of BellSouth or any other entity or person; (3) compromises the privacy of any communications routed through the BellSouth Premises; or (4) creates an unreasonable risk of injury or death to any individual or to the public. If BellSouth reasonably determines that any equipment or facilities of Neutral Tandem violates the provisions of this paragraph, BellSouth shall provide written notice to Neutral Tandem, which shall direct Neutral Tandem to cure the violation within forty-eight (48) hours of Neutral Tandem's receipt of written notice or, if

such cure is not feasible, at a minimum, to commence curative measures within twenty-four (24) hours and exercise reasonable diligence to complete such measures as soon as possible thereafter. After receipt of the notice, the Parties agree to consult immediately and, if necessary, to conduct an inspection of the Collocation Space.

5.14.2 Except in the case of the deployment of an advanced service which significantly degrades the performance of other advanced services or traditional voice band services, if Neutral Tandem fails to cure the violation within forty-eight (48) hours or, if such cure is not possible, to commence curative action within twenty-four (24) hours and exercise reasonable diligence to complete such action as soon as possible, or if the violation is of a character that poses an immediate and substantial threat of damage to property or injury or death to any person, or any other significant degradation, interference or impairment of BellSouth's or another entity's service, then and only in that event, BellSouth may take such action as it deems necessary to eliminate such threat including, without limitation, the interruption of electrical power to Neutral Tandem's equipment and/or facilities. BellSouth will endeavor, but is not required, to provide notice to Neutral Tandem prior to the taking of such action and BellSouth shall have no liability to Neutral Tandem for any damages arising from such action, except to the extent that such action by BellSouth constitutes willful misconduct.

5.14.3 For purposes of this Section, the term "significantly degrades" shall be defined as an action that noticeably impairs a service from a user's perspective. In the case of the deployment of an advanced service which significantly degrades the performance of other advanced services or traditional voice band services and Neutral Tandem fails to cure the violation within forty-eight (48) hours, or if such cure is not possible, to commence curative action within twenty-four (24) hours and exercise reasonable diligence to complete such action as soon as possible, BellSouth will establish before the appropriate Commission that the technology deployed is causing the significant degradation. Any claims of network harm presented to Neutral Tandem or, if subsequently necessary, the Commission must be provided by BellSouth with specific and verifiable information. When BellSouth demonstrates that a certain technology deployed by Neutral Tandem is significantly degrading the performance of other advanced services or traditional voice band services, Neutral Tandem shall discontinue deployment of that technology and migrate its customers to other technologies that will not significantly degrade the performance of such services. Where the only degraded service itself is a known disturber, and the newly deployed technology satisfies at least one of the criteria for a presumption that it is acceptable for deployment, pursuant to 47 C.F.R. § 51.230, the degraded service shall not prevail against the newly-deployed technology.

5.15 Personalty and Its Removal. Facilities and equipment placed by Neutral Tandem in the Collocation Space shall not become a part of the Collocation Space, even if nailed, screwed or otherwise fastened to the Collocation Space, but shall retain

their status as personal property and may be removed by Neutral Tandem at any time. Any damage caused to the Collocation Space by Neutral Tandem's employees, suppliers, agents or Guests during the installation or removal of such property shall be promptly repaired by Neutral Tandem at its sole expense. If Neutral Tandem decides to remove equipment and/or facilities from its Collocation Space and the removal requires no physical work be performed by BellSouth and Neutral Tandem's physical work includes, but is not limited to, power reduction, cross-connects, or tie pairs, BellSouth will bill Neutral Tandem the Administrative Only Application Fee associated with the type of removal activity performed by Neutral Tandem, as set forth in Exhibit B. This nonrecurring fee will be billed on the date that BellSouth provides an Application Response to Neutral Tandem.

5.16 Alterations. Under no condition shall Neutral Tandem or any person acting on behalf of Neutral Tandem make any rearrangement, modification, augment, improvement, addition, and/or other alteration which could affect in any way space, power, HVAC, and/or safety considerations to the Collocation Space or the BellSouth Premises, hereinafter referred to individually or collectively as "Alterations", without the express written consent of BellSouth, which shall not be unreasonably withheld. The cost of any such Alteration shall be paid by Neutral Tandem. An Alteration shall require the submission of a Subsequent Application and will result in the assessment of the applicable application fee associated with the type of alteration requested, as set forth in Sections 6.2.1 and 7.1.4 below, which will be billed by BellSouth on the date that BellSouth provides Neutral Tandem with an Application Response.

5.17 Central Office Janitorial Service. Neutral Tandem shall be responsible for the general upkeep of its Collocation Space. Neutral Tandem shall arrange directly with a BellSouth Certified Supplier for janitorial services applicable to caged Collocation Space. Upon request, BellSouth shall provide a list of such suppliers on a BellSouth Premises-specific basis.

5.18 Upkeep of Remote Collocation Space. Neutral Tandem shall be responsible for the general upkeep and cleaning of the Remote Collocation Space. Neutral Tandem shall be responsible for removing any of Neutral Tandem's debris from the Remote Collocation Space and from in and around the Remote Site Location on each visit.

6 Ordering and Preparation of Collocation Space

6.1 Initial Application. For Neutral Tandem's or Neutral Tandem's Guest's(s') initial equipment placement, Neutral Tandem shall input a physical Expanded Interconnection Application Document (Initial Application) for physical Collocation Space directly into BellSouth's electronic application (e.App) system for processing. The Initial Application is considered Bona Fide when it is complete and accurate, meaning that all of the required fields on the Initial

Application are completed with the appropriate type of information. An Initial Application Fee, as set forth in Exhibit B, will apply to each Initial Application submitted by Neutral Tandem for Central Office or Remote Site Collocation, as applicable, and will be billed by BellSouth on the date BellSouth provides Neutral Tandem with an Application Response.

6.1.1 For Remote Site Collocation, a request for additional space at a later date will require the submission of an Initial Application. The installation of additional shelves/equipment within an existing bay does not require an Initial Application.

6.2 Subsequent Application. In the event Neutral Tandem or Neutral Tandem's Guest(s) desires to modify its use of the Collocation Space in a Central Office after a BFFO, Neutral Tandem shall complete an application that contains all of the detailed information associated with a requested Alteration of the Collocation Space, as defined in Section 5.15 above (Subsequent Application). The Subsequent Application will be considered Bona Fide when it is complete and accurate, meaning that all of the required fields on the Subsequent Application have been completed with the appropriate type of information associated with the requested Alteration. BellSouth shall determine what modifications, if any, to the BellSouth Premises are required to accommodate the change(s) requested by Neutral Tandem in the Subsequent Application. Such modifications to the BellSouth Premises may include, but are not limited to, floor loading changes, changes necessary to meet HVAC requirements, changes to power plant requirements, equipment additions, etc.

6.2.1 Subsequent Application Fees. The application fee paid by Neutral Tandem for an Alteration in a Central Office shall be dependent upon the level of assessment needed to provide a complete Application Response for the Alteration requested. Where the Subsequent Application does not require provisioning or construction work, but requires BellSouth to perform an administrative activity, an Administrative Only Application Fee shall apply as set forth in Exhibit B. The Administrative Only Application Fee will apply to Subsequent Applications associated with a transfer of ownership of the Collocation Space, the addition, exchange or removal of equipment from the Collocation Space (where the removal requires no physical work to be performed by BellSouth which require no additional space, power or terminations to be provided to Neutral Tandem's collocation arrangement), and a virtual-to-physical conversion (in place). The Co-Carrier Cross Connect/Direct Connect Application Fee will apply when Neutral Tandem submits a Subsequent Application for a direct connection between its own physical and virtual Collocation Space(s) in the same BellSouth Central Office or between its physical or virtual Collocation Space and that of another collocated telecommunications carrier within the same BellSouth Central Office. In Florida and Tennessee, the Power Reconfiguration Only Application Fee will apply when Neutral Tandem submits a Subsequent Application that reflects only an upgrade or reduction in the amount of power that BellSouth is currently providing to Neutral Tandem's physical Collocation Space in a Central

Office. The fee for a Subsequent Application, for which the Alteration requested has limited effect (e.g., requires limited assessment and sufficient cable support structure, HVAC, power and terminations are available), shall be the Subsequent Application Fee, as set forth in Exhibit B. The appropriate nonrecurring application fee will be billed on the date that BellSouth provides Neutral Tandem with an Application Response.

6.3 Space Preferences. If Neutral Tandem has previously requested and received a Space Availability Report for the BellSouth Premises, Neutral Tandem may submit up to three (3) space preferences on its application by identifying the specific space identification numbers referenced on the Space Availability Report for the space it is requesting. In the event BellSouth cannot accommodate Neutral Tandem's space preference(s), Neutral Tandem may accept the space allocated by BellSouth or cancel its application and submit another application requesting additional space preferences for the same BellSouth Premises. This application will be treated as a new application and the appropriate application fee will apply. The application fee will be billed by BellSouth on the date that BellSouth provides Neutral Tandem with an Application Response.

6.4 Space Availability Notification

6.4.1 For all states except Florida and Tennessee, BellSouth will respond to an application within ten (10) days as to whether space is available or not available within the requested BellSouth Premises. In Florida and Tennessee, BellSouth will respond to an application within fifteen (15) days as to whether space is available or not available within a BellSouth Premises. BellSouth's e.App system will reflect when Neutral Tandem's application is Bona Fide. If the application cannot be Bona Fide, BellSouth will identify what revisions are necessary for the application to become Bona Fide.

6.4.2 If the amount of space requested is not available, BellSouth will notify Neutral Tandem of the amount of space that is available and no application fee will apply. When BellSouth's response includes an amount of space less than that requested by Neutral Tandem or space that is configured differently, no application fee will apply. If Neutral Tandem decides to accept the available space, Neutral Tandem must resubmit its application to reflect the actual space available, including the configuration of the space, prior to submitting a BFFO. When Neutral Tandem resubmits its application to accept the available space, BellSouth will bill Neutral Tandem the appropriate application fee.

6.5 Denial of Application. If BellSouth notifies Neutral Tandem that no space is available (Denial of Application), BellSouth will not assess an application fee to Neutral Tandem. After notifying Neutral Tandem that BellSouth has no available space in the requested BellSouth Premises, BellSouth will allow Neutral Tandem, upon request, to tour the entire BellSouth Premises within ten (10) days of such Denial of Application. In order to schedule this tour, BellSouth must receive the request for the tour of the BellSouth Premises within five (5) days of the Denial of

Application.

6.6 Petition for Waiver. Upon Denial of Application, BellSouth will timely file a petition with the appropriate Commission pursuant to 47 U.S.C. § 251(c)(6). BellSouth shall provide to the Commission any information requested by that Commission. Such information shall include which space, if any, BellSouth or any of BellSouth's affiliates have reserved for future use and a detailed description of the specific future uses for which the space has been reserved. Subject to an appropriate nondisclosure agreement or provision, BellSouth shall permit Neutral Tandem to inspect any floor plans or diagrams that BellSouth provides to the Commission.

6.7 Waiting List

6.7.1 On a first-come, first-serve basis, which is governed by the date of receipt of an application or Letter of Intent, BellSouth will maintain a waiting list of requesting telecommunications carriers that have either received a Denial of Application or, where it is publicly known that a BellSouth Premises is out of space, have submitted a Letter of Intent to collocate in that BellSouth Premises. BellSouth will notify each telecommunications carrier on the waiting list that can be accommodated by the amount of space that becomes available, according to the position of the telecommunications carrier on said waiting list.

6.7.2 In Florida, on a first-come, first-serve basis, which is governed by the date of receipt of an application or Letter of Intent, BellSouth will maintain a waiting list of requesting telecommunications carriers that have either received a Denial of Application or, where it is publicly known that a BellSouth Premises is out of space, have submitted a Letter of Intent to collocate in that BellSouth Premises. Sixty (60) days prior to space becoming available, if known, BellSouth will notify the Commission and the telecommunications carriers on the waiting list by mail when space will become available. If BellSouth does not know sixty (60) days in advance of when space will become available, BellSouth will notify the Commission and the telecommunications carriers on the waiting list within two (2) business days of the determination that space will become available. A telecommunications carrier that, upon denial of physical Collocation Space, requests virtual Collocation Space shall automatically be placed on the waiting list for physical Collocation Space that may become available in the future.

6.7.3 When physical Collocation Space becomes available, Neutral Tandem must submit an updated, complete and accurate application to BellSouth within thirty (30) days of notification by BellSouth that physical Collocation Space will be available in the requested BellSouth Premises previously out of space. If Neutral Tandem has originally requested caged Collocation Space and cageless Collocation Space becomes available, Neutral Tandem may refuse such space and notify BellSouth in writing, within the thirty (30) day timeframe referenced above, that Neutral Tandem wishes to maintain its place on the waiting list for caged physical Collocation Space, without accepting the available cageless

Collocation Space.

6.7.4 Neutral Tandem may accept an amount of space less than what it originally requested by submitting an application as set forth above, and upon request, may maintain its position on the waiting list for the remaining space that was initially requested. If Neutral Tandem does not submit an application or notify BellSouth in writing within the thirty (30) day timeframe as described in Section 6.7.2 above, BellSouth will offer the available space to the next telecommunications carrier on the waiting list and remove Neutral Tandem from the waiting list. Upon request, BellSouth will advise Neutral Tandem as to its position on the waiting list for a particular BellSouth Premises.

6.8 Public Notification. BellSouth will maintain on its Interconnection Web site, a notification document that will indicate all BellSouth Premises that are without available space. BellSouth shall update such document within ten (10) days of the date that BellSouth becomes aware that insufficient space is available to accommodate physical Collocation. BellSouth will also post a document on its Interconnection Web site that contains a general notice when space becomes available in a BellSouth Premises previously on the space exhaust list.

6.9 Application Response

6.9.1 In Georgia and South Carolina, when space has been determined to be available for physical (caged or cageless) Collocation arrangements, BellSouth will provide an Application Response within twenty (20) days of receipt of a Bona Fide application. The Application Response will be a written response that includes sufficient information to enable Neutral Tandem to place a Firm Order, which, at a minimum, will include the configuration of the space, the Cable Installation Fee, the Cable Records Fee, and any other applicable space preparation fees, as described in Section 8 below.

6.9.2 In Florida and Tennessee, within fifteen (15) days of receipt of a Bona Fide application, when space has been determined to be available or when a lesser amount of space than that requested is available, then with respect to the space available, BellSouth will provide an Application Response including sufficient information to enable Neutral Tandem to place a Firm Order. The Application Response will include, at a minimum, the configuration of the space, the Cable Installation Fee, the Cable Records Fee and any other applicable space preparation fees, as described in Section 8 below. When Neutral Tandem submits ten (10) or more applications within ten (10) days, the initial fifteen (15) day response interval will increase by ten (10) days for every additional ten (10) applications or fraction thereof.

6.10 Application Modifications. If a modification or revision is made to any information in the Bona Fide application after BellSouth has provided the Application Response and prior to a BFFO, with the exception of modifications to (1) Customer Information, (2) Contact Information or (3) Billing Contact Information, whether at the request of Neutral Tandem or as necessitated by

technical considerations, the application shall be considered a new application and handled as a new application with respect to the response and provisioning intervals. BellSouth will charge Neutral Tandem the appropriate application fee associated with the level of assessment performed by BellSouth, pursuant to Sections 6.1 and 6.2 above.

6.11 Bona Fide Firm Order

6.11.1 Neutral Tandem shall indicate its intent to proceed with a Collocation Space request in a BellSouth Premises by submitting a BFFO to BellSouth. The BFFO must be received by BellSouth no later than thirty (30) days after BellSouth's Application Response to Neutral Tandem's Bona Fide application or Neutral Tandem's application will expire.

6.11.2 BellSouth will establish a Firm Order date based upon the date BellSouth is in receipt of Neutral Tandem's BFFO. BellSouth will acknowledge the receipt of Neutral Tandem's BFFO within seven (7) days of receipt, so that Neutral Tandem will have positive confirmation that its BFFO has been received. BellSouth's response to a BFFO will include a Firm Order Confirmation, which contains the firm order date. No revisions may be made to a BFFO.

7 Construction and Provisioning

7.1 Construction and Provisioning Intervals

7.1.1 In Florida and Tennessee, BellSouth will complete construction of physical Collocation Space as soon as possible within a maximum of ninety (90) days from receipt of a BFFO or as agreed to by the Parties. For virtual Collocation Space, BellSouth will complete construction as soon as possible within a maximum of sixty (60) days from receipt of a BFFO or as agreed to by the Parties. For Alterations requested to Collocation Space after the initial space has been completed, BellSouth will complete construction for Collocation Space as soon as possible within a maximum of forty-five (45) days from receipt of a BFFO or as agreed to by the Parties, as long as no additional space has been requested by Neutral Tandem. If additional space has been requested by Neutral Tandem, BellSouth will complete construction for the requested Collocation Space as soon as possible within a maximum of ninety (90) days from receipt of a BFFO for physical Collocation Space and forty five (45) days from receipt of a BFFO for virtual Collocation Space. If BellSouth does not believe that construction will be completed within the relevant provisioning interval and BellSouth and Neutral Tandem cannot agree upon a completion date, within forty-five (45) days of receipt of the BFFO for an initial request, or within thirty (30) days of receipt of the BFFO for an Alteration, BellSouth may seek an extension from the Commission.

7.1.2 In Georgia and South Carolina, BellSouth will complete construction for caged physical Collocation Space under ordinary conditions as soon as possible within a maximum of ninety (90) days from receipt of a BFFO or as agreed to by the

Parties. BellSouth will complete construction for cageless physical Collocation Space under ordinary conditions as soon as possible within a maximum of sixty (60) days from receipt of a BFFO and ninety (90) days from receipt of a BFFO for extraordinary conditions, or as agreed to by the Parties. Ordinary conditions are defined as space available with only minor changes required to BellSouth's support systems. (Examples include, but are not limited to: minor modifications to HVAC, cabling and BellSouth's power plant.) Extraordinary conditions include, but may not be limited to: major BellSouth equipment rearrangements or additions; power plant additions or upgrades; major mechanical additions or upgrades; major upgrades for ADA compliance; environmental hazards or hazardous materials abatement; and arrangements for which equipment shipping intervals are extraordinary in length. The Parties may mutually agree to renegotiate an alternative provisioning interval for the Collocation Space requested or BellSouth may seek a waiver from the ordered interval, as set forth above, from the appropriate Commission, if BellSouth does not believe that construction will be completed within the relevant provisioning interval.

7.1.3 Records Only Change. When Neutral Tandem adds equipment, that was originally included on Neutral Tandem's Initial Application or a Subsequent Application, and the installation of this equipment requires no additional space preparation work or cable terminations on the part of BellSouth, then BellSouth will impose no additional charges or intervals.

7.1.4 For Central Offices in the states of Georgia and South Carolina, BellSouth will provide the reduced intervals outlined below to Neutral Tandem, when Neutral Tandem requests an Alteration specifically identified in Sections 7.1.4.1 through 7.1.4.9 below as an "Augment". Except as otherwise set forth in Section 7.1.4.10 below, such Augment will require a Subsequent Application and will result in the assessment of the appropriate application fee associated with the type of Augment requested by Neutral Tandem. BellSouth will assess the appropriate nonrecurring application fee set forth in Exhibit B on the date that it provides an Application Response to Neutral Tandem.

7.1.4.1 Simple Augments will be completed within twenty (20) days after receipt of the BFFO for an:

- Extension of Existing AC Circuit Capacity within Arrangement where Sufficient Circuit Capacity is Available
- Fuse Change and/or Increase or Decrease -48 Volt (-48V) DC Power

7.1.4.2 Minor Augments will be completed within forty-five (45) days after receipt of the BFFO for:

- 168 DS1 Terminations at the BellSouth Demarcation Frame (Databasing Only; Panels, Relay Racks and Overhead Racking Exist)
- 96 DS3 Terminations at the BellSouth Demarcation Frame (Databasing Only; Panels, Relay Racks and Overhead Racking Exist)

- 99 Fiber terminations at the BellSouth Demarcation Frame (Databasing Only; Panels, Relay Racks and Overhead Racking Exist)
- Maximum of 2000 Service Ready DS0 Terminations at the BellSouth Demarcation Frame (Databasing Only; Panels, Relay Racks and Overhead Racking Exist)

7.1.4.3 Intermediate Augments will be completed within sixty (60) days after receipt of the BFFO for:

- 168 DS1s (Databasing and Installation of Termination Panels, Relay Racks or Additional Structure, as Required)
- 96 DS3s (Databasing and Installation of Termination Panels, Relay Racks or Additional Structure, as Required)
- 99 Fiber Terminations (Databasing and Installation of Termination Panels, Relay Racks or Additional Structure, as Required)
- 2000 DS0s (Databasing and Installation of Termination Panels, Relay Racks or Additional Structure, as Required)
- Installation of Cable Racking or Other Support Structure, as Required, to Support CCXCs (Adequate Floor or Ceiling Structural Capacity Exists and Support/Protection structure for Fiber Patch Cord is Excluded)

7.1.4.4 Major Augments of physical Collocation Space will be completed within ninety (90) days after BFFO. All requests for additional Physical Collocation Space (caged or cageless) are included in this category.

7.1.4.5 Major Augments of virtual Collocation Space will be completed within seventy-five (75) days after BFFO. This category includes all requests for additional virtual Collocation Space.

7.1.4.6 If Neutral Tandem submits an Augment that includes two (2) Augment items from the same category in either Sections 7.1.4.1, 7.1.4.2 or 7.1.4.3 above, the provisioning interval associated with the next highest Augment category will apply (e.g., if two (2) items from the Minor Augment category are requested on the same request, then an interval of sixty (60) days from the receipt of the BFFO would apply, which is the interval associated with the Intermediate Augment category).

7.1.4.7 If Neutral Tandem submits an Augment that includes three (3) Augment items from the same category in either Sections 7.1.4.1, 7.1.4.2, or 7.1.4.3 above, the Major Augment interval of ninety (90) days from the receipt of the BFFO would apply (e.g., if three (3) items from the Simple Augment category are requested on the same request for a physical Collocation arrangement, then an interval of ninety (90) days from the receipt of the BFFO would apply, which is the Major physical Augment interval; likewise if three (3) items from the Simple Augment category are requested on the same request for a virtual Collocation arrangement, then an interval of seventy-five (75) days from the receipt of the BFFO would

apply, which is the Major virtual Augment interval).

7.1.4.8 If Neutral Tandem submits an Augment that includes one (1) Augment item from two (2) separate categories in Sections 7.1.4.1, 7.1.4.2 and 7.1.4.3 above, the Augment interval associated with the highest Augment category will apply (e.g., if an item from the Minor Augment category and an item from the Intermediate Augment category are requested on the same request, then an interval of sixty (60) days from the receipt of the BFFO would apply, which is the interval associated with the Intermediate Augment category).

7.1.4.9 All Augments not expressly included in the Simple, Minor, Intermediate or Major Augment categories, as outlined above, will be placed into the appropriate category as negotiated by Neutral Tandem and BellSouth. If Neutral Tandem and BellSouth are unable to determine the appropriate category through negotiation, then the appropriate Major Augment category, identified in Sections 7.1.4.4 and Section 7.1.4.5 above, would apply based on whether the Augment is for Neutral Tandem's physical or virtual Collocation Space.

7.1.4.10 Individual application fees associated with Simple, Minor and Intermediate Augments are contained in Exhibit B. If Neutral Tandem requests multiple items from different Augment categories, BellSouth will bill Neutral Tandem the Augment application fee, as identified in Exhibit B, associated with the higher Augment category only. The appropriate application fee will be assessed to Neutral Tandem at the time BellSouth provides Neutral Tandem with the Application Response. Neutral Tandem will be assessed a Subsequent Application Fee for all Major Augments (Major Augments are defined above in Sections 7.1.4.4 and 7.1.4.5 above for physical and virtual Collocation Space, respectively). The Subsequent Application Fee is also reflected in Exhibit B.

7.2 Joint Planning. Unless otherwise agreed to by the Parties, a joint planning meeting or other method of joint planning between BellSouth and Neutral Tandem will commence within a maximum of twenty (20) days from BellSouth's receipt of a BFFO. At such meeting, the Parties will agree to the preliminary design of the Collocation Space and the equipment configuration requirements, as reflected in the application and affirmed in the BFFO.

7.3 Permits. Each Party, its agent(s) or BellSouth Certified Supplier(s) will diligently pursue filing for the permits required for the scope of work to be performed by that Party, its agent(s) or BellSouth Certified Supplier(s) within ten (10) days of the completion of the finalized construction design and specifications.

7.4 Central Office Circuit Facility Assignments

7.4.1 Unless otherwise specified, BellSouth will provide Circuit Facility Assignments (CFAs) to Neutral Tandem prior to the applicable provisioning interval set forth herein (Provisioning Interval) for those BellSouth Premises in which Neutral Tandem has physical Collocation Space with no POT bay or with a grandfathered

POT bay provided by BellSouth. BellSouth cannot provide CFAs to Neutral Tandem prior to the Provisioning Interval for those BellSouth Premises in which Neutral Tandem has physical Collocation Space with a POT bay provided by Neutral Tandem or virtual Collocation Space, until Neutral Tandem has provided BellSouth with the following information:

7.4.1.1 For physical Central Office Collocation Space with a Neutral Tandem-provided POT bay, Neutral Tandem shall provide BellSouth with a complete layout of the POT panels on an Equipment Inventory Update (EIU) form that shows the locations, speeds, etc.; or

7.4.1.2 For virtual Central Office Collocation Space, Neutral Tandem shall provide BellSouth with a complete layout of Neutral Tandem's equipment on an EIU form, that includes the locations of the low speed ports and the specific frame terminations to which the equipment will be wired by Neutral Tandem's BellSouth Certified Supplier.

7.4.2 BellSouth cannot begin work on the CFAs until the complete and accurate EIU form has been received from Neutral Tandem. If the EIU form is provided within ten (10) days prior to the ending date of the Provisioning Interval, then the CFAs will be made available by the ending date of the Provisioning Interval. If the EIU form is not received ten (10) days prior to the ending date of the Provisioning Interval, then the CFAs will be provided within ten (10) days of BellSouth's receipt of the EIU form.

7.4.3 BellSouth will bill Neutral Tandem a nonrecurring charge, as set forth in Exhibit B, each time Neutral Tandem requests a resend of its original CFA information for any reason other than a BellSouth error in the CFAs initially provided to Neutral Tandem.

7.5 Use of BellSouth Certified Supplier. Neutral Tandem shall select a supplier which has been approved as a BellSouth Certified Supplier to perform all engineering and installation work. Neutral Tandem, if a BellSouth Certified Supplier or Neutral Tandem's BellSouth Certified Supplier must follow and comply with all of BellSouth's specifications and the following BellSouth Technical Requirements: TR 73503, TR 73519, TR 73572 and TR 73564. Unless the BellSouth Certified Supplier has met the requirements for all of the required work activities, Neutral Tandem must use a different BellSouth Certified Supplier for the work activities associated with transmission equipment, switching equipment and power equipment. BellSouth shall provide Neutral Tandem with a list of BellSouth Certified Suppliers, upon request. Neutral Tandem, if a BellSouth Certified Supplier, or Neutral Tandem's BellSouth Certified Supplier(s) shall be responsible for installing Neutral Tandem's equipment and associated components, extending power cabling to the BellSouth power distribution frame, performing operational tests after installation is complete, and notifying BellSouth's equipment engineers and Neutral Tandem upon successful completion of the installation and any associated work. When a BellSouth

Certified Supplier is used by Neutral Tandem, the BellSouth Certified Supplier shall bill Neutral Tandem directly for all work performed for Neutral Tandem pursuant to this Attachment. BellSouth shall have no liability for nor responsibility to pay, such charges imposed by Neutral Tandem's BellSouth Certified Supplier. BellSouth shall make available its supplier certification program to Neutral Tandem or any supplier proposed by Neutral Tandem and will not unreasonably withhold certification. All work performed by or for Neutral Tandem shall conform to generally accepted industry standards.

7.6 Alarms and Monitoring. BellSouth shall place environmental alarms in the BellSouth Premises for the protection of BellSouth equipment and facilities. Neutral Tandem shall be responsible for the placement, monitoring and removal of environmental and equipment alarms used to service Neutral Tandem's Collocation Space. Upon request, BellSouth will provide Neutral Tandem with an applicable BellSouth tariffed service(s) to facilitate remote monitoring of collocated equipment by Neutral Tandem. Both Parties shall use best efforts to notify the other of any verified environmental condition (e.g., temperature extremes or excess humidity) known to that Party.

7.7 Virtual to Physical Relocation. In the event physical Collocation Space was previously denied at a BellSouth Central Office due to technical reasons or space limitations and physical Collocation Space has subsequently become available, Neutral Tandem may relocate its existing virtual Collocation arrangement(s) to a physical Collocation arrangement(s) and pay the appropriate fees associated with the rearrangement or reconfiguration of the services being terminated into the virtual Collocation arrangement, as set forth in Exhibit B. If BellSouth knows when additional physical Collocation Space may become available at the BellSouth Central Office requested by Neutral Tandem, such information will be provided to Neutral Tandem in BellSouth's written denial of physical Collocation Space. Neutral Tandem must arrange with a BellSouth Certified Supplier for the relocation of equipment from a virtual Collocation Space to a physical Collocation Space and will bear the cost of such relocation, including the costs associated with moving the services from the virtual Collocation Space to the new physical Collocation Space.

7.8 Virtual to Physical Conversion (In-Place)

7.8.1 Virtual collocation arrangements in Central Offices may be converted to "in-place" physical caged collocation arrangements if the potential conversion meets all of the following criteria: (1) there is no change in the amount of equipment or the configuration of the equipment that was in the virtual Collocation Space; (2) the conversion of the virtual collocation arrangement will not cause the equipment or the results of that conversion to be located in a space that BellSouth has reserved for its own future needs; and (3) any changes to the arrangement can be accommodated by existing power, HVAC, and other requirements. Unless otherwise specified herein, BellSouth will complete virtual to physical Collocation Space conversions (in-place) within sixty (60) days from

receipt of the BFFO. BellSouth will bill Neutral Tandem an Administrative Only Application Fee, as set forth in Exhibit B, on the date BellSouth provides an Application Response to Neutral Tandem.

7.8.2 In Tennessee, BellSouth will complete virtual to physical conversions (in place) within thirty (30) days from receipt of the BFFO as long as the conversion meets all of the criteria specified in Section 7.8.1 above.

7.9 Cancellation. Unless otherwise specified in this Attachment, if at any time prior to Space Acceptance, Neutral Tandem cancels its order for Collocation Space (Cancellation), BellSouth will bill the applicable nonrecurring charge(s) for any and all work processes for which work has begun or been completed. In Florida, if Neutral Tandem cancels its order for Collocation Space at any time prior to the Space Ready Date, no cancellation fee shall be assessed by BellSouth; however, Neutral Tandem will be responsible for reimbursing BellSouth for any costs specifically incurred by BellSouth on behalf of Neutral Tandem up to the date that the written notice of cancellation was received by BellSouth. In Georgia, if Neutral Tandem cancels its order for Collocation Space at any time prior to space acceptance, BellSouth will bill Neutral Tandem for all costs incurred prior to the date of Cancellation and for any costs incurred as a direct result of the Cancellation, not to exceed the total amount that would have been due had the Firm Order not been canceled.

7.10 Licenses. Neutral Tandem, at its own expense, will be solely responsible for obtaining from governmental authorities, and any other appropriate agency, entity, or person, all rights, privileges, permits, licenses and certificates necessary or required to operate as a provider of telecommunications services to the public or to build-out, equip and/or occupy Collocation Space in a BellSouth Premises.

7.11 Environmental Compliance. The Parties agree to utilize and adhere to the Environmental Hazard Guidelines identified in Exhibit A attached hereto.

8 Rates and Charges

8.1 Rates. Neutral Tandem agrees to pay the rates and charges identified in Exhibit B attached hereto.

8.1.1 In Tennessee, if Neutral Tandem elects the TRA rates as set forth in Exhibit C, the additional language also set forth in Exhibit C for Application Fee, Space Preparation, Floor Space and Caged Collocation Power Usage metering, will be effective in conjunction with the remaining terms and conditions of this Attachment.

8.1.2 Should Neutral Tandem elect to transition to the TRA Option after the execution of this Agreement, Neutral Tandem shall notify BellSouth in writing sixty (60) days prior to the implementation of this election.

8.2 Application Fees. BellSouth shall assess any nonrecurring application fees within thirty (30) days of the date that BellSouth provides an Application Response to Neutral Tandem or on Neutral Tandem's next scheduled monthly billing

statement.

8.3 Recurring Charges

8.3.1 If Neutral Tandem has met the applicable fifteen (15) day acceptance walk through interval specified in Section 4.2 above, billing for recurring charges will begin upon the Space Acceptance Date. In the event Neutral Tandem fails to complete an acceptance walk through within the applicable fifteen (15) day interval, billing for recurring charges will commence on the Space Ready Date. If Neutral Tandem occupies the space prior to the Space Ready Date, the date Neutral Tandem occupies the space is deemed the Space Acceptance Date and billing for recurring charges will begin on that date. The billing for all applicable monthly recurring charges will begin in Neutral Tandem's next billing cycle and will include any prorated charges for the period from Neutral Tandem's Space Acceptance Date or Space Ready Date, whichever is appropriate pursuant to Section 4.2 above, to the date the bill is issued by BellSouth.

8.3.2 Unless otherwise stated in Section 8.6 below, monthly recurring charges for -48V DC power will be assessed per fused ampere (amp), per month, based upon the total number of fused amps of power capacity requested by Neutral Tandem on Neutral Tandem's Initial Collocation Application and all Subsequent Collocation Applications, which may either increase or decrease the originally requested, and any subsequently augmented, number of fused amps of power capacity requested, consistent with Commission orders.

8.3.3 BellSouth shall have the right to inspect and inventory any DC power fuse installations at a BellSouth BDFB or DC power circuit installations at BellSouth's main power board for any Neutral Tandem collocation arrangement, to verify that the total number of fused amps of power capacity installed by Neutral Tandem's BellSouth Certified Supplier matches the number of fused amps of DC power capacity requested by Neutral Tandem on Neutral Tandem's Initial Application and all Subsequent Applications. If BellSouth determines that Neutral Tandem's BellSouth Certified Supplier has installed more DC capacity than Neutral Tandem requested on its Initial Application and all Subsequent Applications, BellSouth shall notify Neutral Tandem in writing of such discrepancy and shall assess Neutral Tandem for the additional DC power fuse/circuit capacity from the Space Acceptance Date or Space Ready Date, whichever is applicable pursuant to Section 8.3.1 above, for the most recent Initial Application or Subsequent Application, submitted for such collocation arrangement. BellSouth shall also revise Neutral Tandem's recurring DC power charges, on a going-forward basis, to reflect the higher number of fused amps of power capacity available for the collocation arrangement.

8.4 Nonrecurring Charges. Unless specified otherwise herein, BellSouth shall assess nonrecurring charges, including all application fees, within thirty (30) days of the date that BellSouth provides an Application Response to Neutral Tandem or on Neutral Tandem's next scheduled monthly billing statement, if Neutral Tandem's

current month's billing cycle has already closed. Nonrecurring charges associated with the processing of the Firm Order for collocation space preparation (Firm Order Processing Fee) shall be billed by BellSouth within thirty (30) days of BellSouth's confirmation of Neutral Tandem's BFFO or on Neutral Tandem's next scheduled monthly billing statement.

8.5 In some cases, Commissions have ordered BellSouth to separate its disconnect costs and its installation costs into two separate nonrecurring charges. Accordingly, unless otherwise noted in this Agreement, the Commission ordered disconnect charges will be applied at the time the disconnect activity is performed by BellSouth, regardless of whether or not a disconnect order is issued by Neutral Tandem. Disconnect charges are set forth in Exhibit B of this Attachment.

8.6 Central Office Space Preparation. Space preparation fees consist of a nonrecurring charge for Firm Order Processing and monthly recurring charges for Central Office Modifications and Common Systems Modifications. For all states except Florida, Neutral Tandem shall remit the payment of the nonrecurring Firm Order Processing Fee coincident with the submission of Neutral Tandem's BFFO. In Florida, the nonrecurring Firm Order Processing Fee will be billed by BellSouth, pursuant to Section 8.4 above. The monthly recurring charge for Central Office Modifications will be assessed per arrangement, per square foot, for both caged and cageless physical Collocation Space. The monthly recurring charge for Common Systems Modifications will be assessed per arrangement, per square foot for cageless physical Collocation Space and on a per cage basis for caged physical Collocation Space. These charges recover the costs associated with preparing the Collocation Space, which includes, but is not limited to, the following items: a survey, engineering of the Collocation Space, and design and modification costs for network, building and support systems.

8.7 Central Office Floor Space. The Floor Space Charge includes reasonable charges for lighting, HVAC, and other allocated expenses associated with maintenance of the BellSouth Premises; however, this charge does not include any expenses associated with AC or DC power supplied to Neutral Tandem's Collocation Space for the operation of Neutral Tandem's equipment. For caged physical Collocation Space, Neutral Tandem shall pay floor space charges based upon the number of square feet enclosed. The minimum size for caged Collocation Space is fifty (50) square feet. Additional caged Collocation Space may be requested in increments of fifty (50) square feet. For cageless Collocation Space, Neutral Tandem shall pay floor space charges based upon the following floor space calculation: [(depth of the equipment lineup in which the rack is placed) + (0.5 x maintenance aisle depth) + (0.5 x wiring aisle depth)] x (width of rack and spacers). For purposes of this calculation, the depth of the equipment lineup shall consider the footprint of equipment racks plus any equipment overhang. BellSouth will assign cageless Collocation Space in conventional equipment rack lineups where feasible. In the event Neutral Tandem's collocated equipment requires special cable racking, an isolated ground plane, or any other considerations and treatment which prevents

placement within conventional equipment rack lineups, Neutral Tandem shall be required to request an amount of floor space sufficient to accommodate the total equipment arrangement.

8.8 Remote Site Bay Space. In a Remote Site, the bay space charge recovers the costs associated with air conditioning, ventilation and other allocated expenses for the maintenance of the Remote Site Location, and includes the amperage necessary to power Neutral Tandem's equipment. Neutral Tandem shall remit bay space charges based upon the number of bays requested. BellSouth will assign Remote Site Collocation Space in conventional Remote Site bay lineups where feasible.

8.9 Power

8.9.1 In a Central Office BellSouth shall make available -48V DC power for Neutral Tandem's Collocation Space at a BellSouth BDFB. When obtaining DC power from a BellSouth BDFB, Neutral Tandem's fuses and power cables (for the A & B feeds) must be engineered (sized), and installed by Neutral Tandem's BellSouth Certified Supplier, in accordance with the number of fused amps of DC power requested by Neutral Tandem on Neutral Tandem's Initial Application and any Subsequent Applications. Neutral Tandem is also responsible for contracting with a BellSouth Certified Supplier to run the power distribution feeder cable from the BellSouth BDFB to the equipment in Neutral Tandem's Collocation Space. The BellSouth Certified Supplier contracted by Neutral Tandem must provide BellSouth with a copy of the engineering power specifications prior to the day on which Neutral Tandem's equipment becomes operational (hereinafter "Commencement Date"). BellSouth will provide the common power feeder cable support structure between the BellSouth BDFB and Neutral Tandem's Collocation Space. Neutral Tandem shall contract with a BellSouth Certified Supplier who shall be responsible for performing those power provisioning activities required to enable Neutral Tandem's equipment to become operational, which may include, but are not limited to, the installation, removal or replacement of the following: dedicated power cable support structure within Neutral Tandem's Collocation Space, power cable feeds and terminations of the power cabling. Neutral Tandem and Neutral Tandem's BellSouth Certified Supplier shall comply with all applicable NEC, BellSouth TR 73503, Telcordia and ANSI Standards that address power cabling, installation and maintenance.

8.9.1.1 At a Remote Site, BellSouth shall make available -48V DC power for Neutral Tandem's Remote Collocation Space at a BDFB within the Remote Site Location. The charge for power shall be assessed as part of the recurring charge for bay space, as referenced in Section 8.7 above. If the power requirements for Neutral Tandem's equipment exceed the capacity available, then such additional power requirements shall be assessed on an individual case basis.

8.9.2 In Florida Central Offices only, subject to technical feasibility, commercial availability and safety limitations, BellSouth will permit Neutral Tandem to

request DC power in five (5) amp increments from five (5) amps up to one hundred (100) amps from the BellSouth BDFB. However, in accordance with industry standard fuse sizing, Neutral Tandem may request that BellSouth provision DC power of seventy (70) amps or greater directly from BellSouth's main power board. The industry standard fuse size (which is a circuit breaker on the main power board) available at a BellSouth main power board in all BellSouth Premises is a two hundred twenty-five (225) amp circuit breaker.

8.9.3 BellSouth will revise Neutral Tandem's Central Office recurring power charges, in accordance with Section 8.3 above, to reflect a power upgrade when Neutral Tandem submits a Subsequent Application requesting an increase in the number of fused amps it is currently receiving from BellSouth for its Collocation Space. If Neutral Tandem's existing fuses and power cables (for the A&B power feed) are not sufficient to support the additional number of fused amps requested, Neutral Tandem's BellSouth Certified Supplier shall perform whatever activities are necessary, which may include the installation of new/additional fuses or power cables, to comply with the appropriate NEC, BellSouth TR 73503, Telcordia and ANSI Standards, as well as the requirements noted in Sections 8.7 and 8.7.1 above. Neutral Tandem's BellSouth Certified Supplier shall provide notification to BellSouth when these activities have been completed.

8.9.4 BellSouth will revise Neutral Tandem's Central Office recurring power charges, in accordance with Section 8.3 above, to reflect a power reduction upon BellSouth's receipt of the Power Reduction Form from Neutral Tandem, certifying the completion of the power reduction work, including the removal of any associated power cabling by Neutral Tandem's BellSouth Certified Supplier. Notwithstanding the foregoing, if Neutral Tandem's BellSouth Certified Supplier has not removed or, at BellSouth's discretion, cut the power cabling within thirty (30) days, the power reduction will not become effective until the cabling is removed or, at BellSouth's discretion, cut by Neutral Tandem's BellSouth Certified Supplier and Neutral Tandem shall pay for the amount of power that had been requested prior to the power reduction request for the period up to the date the power cabling is actually removed.

8.9.5 If Neutral Tandem requests an increase or a reduction in the amount of power that BellSouth is currently providing in a Central Office, Neutral Tandem must submit a Subsequent Application. In all states other than Florida and Tennessee if no modification to the Collocation Space is requested other than the increase or reduction in power, the Simple Augment fee will apply. In Florida and Tennessee the Power Reconfiguration Only Application Fee as set forth in Exhibit B will apply. If modifications are requested in addition to the increase or reduction of power, the Subsequent Application Fee will apply. BellSouth will bill this nonrecurring fee on the date that BellSouth provides an Application Response to Neutral Tandem's Subsequent Application.

8.9.6 If Neutral Tandem elects to install its own DC Power Plant, BellSouth shall provide AC power to feed Neutral Tandem's DC Power Plant. Charges for AC

power will be assessed on a per breaker ampere, per month basis, pursuant to the rates specified in Exhibit B. The AC power rates include recovery for the provision of commercial and standby AC power. When obtaining power from a BellSouth service panel, protection devices and power cables must be engineered (sized) and installed by Neutral Tandem's BellSouth Certified Supplier, with the exception that BellSouth shall engineer and install protection devices and power cables for Adjacent Collocation. Neutral Tandem's BellSouth Certified Supplier must provide a copy of the engineering power specifications prior to the Commencement Date. AC power voltage and phase ratings shall be determined on a per location basis. At Neutral Tandem's option, Neutral Tandem may arrange for AC power in an adjacent collocation arrangement from a retail provider of electrical power.

8.9.5 Neutral Tandem shall contract with a BellSouth Certified Supplier to perform the installation and removal of dedicated power cable support structure within Neutral Tandem's arrangement and terminations of cable within the Collocation Space.

8.9.6 Fused Amp Power. In all states, except as otherwise set forth in this Agreement, BellSouth shall make available -48V DC power on a per fused amp, per month basis, pursuant to the following:

For power provisioned from a BDFB. The number of fused amps requested by Neutral Tandem on its collocation application for power that is being provisioned from a BellSouth BDFB will be multiplied by the DC power fused amp rate set forth in Exhibit B. A minimum of ten (10) fused amps is required.

For existing power configurations that are provisioned from BellSouth's main power board. The number of fused amps made available at the main power board, in increments of two hundred and twenty-five (225) amps/main power board circuit, will be multiplied by the DC power fused amp rate set forth in Exhibit B.

8.9.7 Florida Power Usage Option

8.9.9.1 In Central Offices in Florida only, Neutral Tandem may request that -48 DC power provisioned by BellSouth to Neutral Tandem's Collocation Space be assessed per amp, per month based upon amps used, pursuant to the rates set forth in Exhibit B. Monthly recurring power charges will be assessed on the Space Acceptance Date or Space Ready Date, whichever is appropriate, pursuant to Section 8.3 above. If Neutral Tandem desires to convert existing physical collocation arrangements to the Florida Power Usage Option (hereinafter "FL Option"), then the monthly recurring power charges that are applicable to the FL Option, contained in Exhibit B, will be assessed on the Space Ready Date associated with the Subsequent Application submitted by Neutral Tandem to convert an existing collocation arrangement to the FL Option. The monthly recurring charges for DC power, under the FL Option, shall be calculated and applied based on the amount of power Neutral Tandem requests that it be allowed

to draw at a given time to a specific physical collocation arrangement in a particular BellSouth Premises on Neutral Tandem's Initial Application or Subsequent Application. BellSouth shall allow Neutral Tandem at Neutral Tandem's option, to order a power feed that is capable of delivering a higher DC power level but to fuse this power feed so as to allow a power level less than the feed's maximum to be drawn by Neutral Tandem. BellSouth is not required to build its central office power infrastructure to meet Neutral Tandem's forecasted DC power demand. Neutral Tandem must specify on its Initial or Subsequent Application the power level it wishes to be able to draw from BellSouth's power plant for each existing collocation arrangement Neutral Tandem converts to the FL Option or for any new collocation arrangements Neutral Tandem establishes under the FL Option.

8.9.9.2 BellSouth, at any time and at its own expense, shall have the right to verify the accuracy of Neutral Tandem's power usage under the FL Option for a specific collocation arrangement in a particular BellSouth Premises, based on a meter reading(s) taken by BellSouth of the amount of power being consumed by Neutral Tandem's collocation arrangement. BellSouth may perform its own meter reading(s) via any method it chooses, such as, but not limited to, a clamp-on ammeter. If the meter reading(s) varies by more than ten percent (10%) or five (5) amps from the power usage that has been requested by Neutral Tandem for the collocation arrangement, under the FL Option, the Parties agree to work cooperatively to reconcile such discrepancy and establish the appropriate usage figure in a reasonable and expeditious manner. If the Parties substantiate BellSouth's reading, then BellSouth shall adjust Neutral Tandem's billing to reflect BellSouth's power reading beginning with the first day of the month immediately following the date of the last metered reading taken by BellSouth.

8.9.9.3 BellSouth shall assess Neutral Tandem a monthly recurring charge for DC power under the FL Option, as set forth in Exhibit B. Neutral Tandem shall notify BellSouth of any change in its DC power usage by submitting a Subsequent Application, which reflects the new DC power level desired by Neutral Tandem. The requested change in DC power usage will be reflected in Neutral Tandem's next scheduled monthly billing cycle.

8.9.10 Tennessee Caged Collocation Power Usage Metering Option. In Central Offices in Tennessee only, Neutral Tandem may request that DC power provisioned by BellSouth to Neutral Tandem's caged Collocation Space be assessed pursuant to the orders entered by the Tennessee Regulatory Authority in Dockets 97-01262, 99-00430, and 00-00544 for Collocation for Tennessee. By electing the TRA Option, Neutral Tandem accepts the TRA rates, terms and conditions of Exhibit C in their entirety in conjunction with the other terms and conditions of Attachment 4.

8.9.11 Georgia Caged Collocation Power Usage Metering Option. - In Georgia, Neutral Tandem may request that DC power provisioned by BellSouth to Neutral Tandem's Collocation Space be assessed pursuant to Georgia Public Service

Commission Order Docket No. 14361-U ("Order"). BellSouth will assess Neutral Tandem for -48V DC power using the actual number of load Amps measured. The power circuits may be fed from either a BellSouth BDFB or Neutral Tandem's BDFB. These recurring power charges will be assessed by BellSouth on the Space Acceptance Date or Space Ready Date, whichever is appropriate, pursuant to Section 8.3.

8.9.11.1 Upon Neutral Tandem's election of the power metering option Neutral Tandem will convert existing caged collocation arrangements to the power metering rate structure. The recurring power charges that are contained Exhibit B of this Attachment will be assessed on the Space Ready Date associated with the Subsequent Application submitted by Neutral Tandem to convert an existing caged collocation arrangement to the metered power rates.

8.9.11.2 Pursuant to the Order, Neutral Tandem shall provide a Fluke Model 189 AC/DC multimeter and Fluke Model i410 clamp-on ammeter probe for each central office where they have requested metered power. One copy of the FlukeView software must also be provided for each Fluke 189 multimeter, and each copy must comply with Fluke copyrights.

8.9.11.3 Neutral Tandem may, at its sole cost and expense, install its own meters on its BDFB(s) located in its own caged Collocation Space(s) and notify BellSouth of the option of using such meters for the purposes of measuring Neutral Tandem's actual power usage. In such case, BellSouth, or its BellSouth Certified Supplier, will have the option of reading and recording the actual power usage from either the meter installed on Neutral Tandem's own BDFB(s) or via the aforementioned Fluke 189 multimeter equipped with a Fluke i410 clamp-on ammeter probe.

8.9.11.4 BellSouth, at its sole option and at its own cost, may choose to purchase, install, and use its own ammeter measurement device. The usage reading for the option elected by BellSouth shall be used for purposes of calculating the DC power usage billing.

8.9.11.5 BellSouth, or its BellSouth Certified Supplier, will perform all metering activities, to measure the actual power usage being drawn by Neutral Tandem's collocation equipment on both the A and B power feeds. The charge will be the sum of both the A and B power feeds and will be based upon either an instantaneous reading or busy hour average current reading, depending on the capabilities of the ammeter measurement device.

8.9.11.6 If BellSouth, or its BellSouth Certified Supplier, requires access to Neutral Tandem's caged Collocation Space(s) for purposes of measuring the power usage, BellSouth or its BellSouth Certified Supplier shall provide Neutral Tandem with a minimum of forty-eight (48) hours (two business days) notice that access is required. Neutral Tandem shall respond to such request for access within twenty-four (24) hours for the purpose of establishing the date and time of access to Neutral Tandem's caged Collocation Space(s). Once the date and time of access to Neutral Tandem's caged Collocation Space(s) has been agreed upon, Neutral

Tandem and BellSouth, or its BellSouth Certified Supplier, shall adhere to the agreed upon date and time, or provide a minimum of three (3) hours notice to the other Party if the original appointment(s) will be missed or must be canceled and rescheduled. Once a mutually agreed upon date and time are established and Neutral Tandem does not provide minimum of three (3) hours notice, BellSouth's Certified Supplier will only remain at the site for thirty (30) minutes. After thirty (30) minutes the appointment will be considered missed by Neutral Tandem.

8.9.11.7 If Neutral Tandem fails to provide access to its caged Collocation Space(s) or fails to provide BellSouth, or its BellSouth Certified Supplier, with sufficient notification of the missed appointment(s), as noted above, then Neutral Tandem shall pay the nonrecurring "Additional Meter Reading Trip Charge", as set forth in Exhibit B of this Attachment, for each additional meter reading trip that must be rescheduled to measure Neutral Tandem's power usage for such caged Collocation Space(s). Neutral Tandem and the BellSouth Certified Supplier may jointly agree to less stringent notification requirements to address, for example, any service interruption or restoration of service situations, on a location-by-location basis.

8.9.11.8 For each new caged collocation arrangement, Neutral Tandem shall indicate on Neutral Tandem's Initial Application that they are electing to have metered power. For each location that Neutral Tandem wishes to convert to metered power Neutral Tandem will submit a Subsequent Application and agrees to include in the Comments section of the Subsequent Application the following comment:

This Subsequent Application is Neutral Tandem's certification that Neutral Tandem is opting to convert this caged collocation arrangement to metered power and will permit BellSouth, or the BellSouth Certified Supplier, to measure its actual power usage on all power feeds.

8.9.11.9 BellSouth will bill Neutral Tandem a Power Reconfiguration Only Application Fee, as set forth in Exhibit B of this Attachment, on the date that BellSouth provides an Application Response to each Subsequent Application submitted by Neutral Tandem converting its caged collocation arrangements to the metered power rates. BellSouth shall then arrange for the measurement of Neutral Tandem's actual power usage on each power feed (each A and B power feed) once each quarter at each of Neutral Tandem's caged collocation arrangements for which Neutral Tandem has submitted an Initial or Subsequent Application electing metered power.

8.9.11.10 Based upon the actual power usage measurement taken by BellSouth or the BellSouth Certified Supplier, BellSouth shall assess Neutral Tandem for power usage for the following quarter based upon Neutral Tandem's actual metered usage for each power feed (both the A and B power feeds) or a minimum of ten (10) amps of –48V DC power usage for the sum of the A and B feeds for each

power cable, whichever is greater. Such usage shall then be multiplied by the rate for Load Amps either with a BellSouth BDFB or with Neutral Tandem BDFB as set forth in Exhibit B of this Attachment, to determine the appropriate monthly recurring power usage charge that will be billed to Neutral Tandem for the following three (3) months or until the next power usage measurement is taken, whichever is later.

8.9.11.11 Either Party, within fifteen (15) days of notice of the usage measurement established by the scheduled meter reading, may challenge the accuracy of that reading by requesting a new reading. If Neutral Tandem requests that an unscheduled (prior to the next scheduled quarterly power reading date) power usage reading be taken, then Neutral Tandem will be responsible for paying the "Additional Meter Reading Trip Charge" contained in Exhibit B of this Attachment. If BellSouth requests a power usage reading be taken in this instance, then Neutral Tandem will not be charged the "Additional Meter Reading Trip Charge" for the unscheduled meter reading. If the readings vary by more than ten (10) % or five (5) Amps, whichever is greater, the Parties shall work cooperatively to reconcile such discrepancies and establish the appropriate usage figure in a reasonable and expeditious manner. If the readings do not vary outside these ranges, the initial reading will be used to calculate Neutral Tandem's AC usage charge for the next three (3) months.

8.9.11.12 BellSouth, at any time and at its own expense, shall have the right to verify the accuracy of Neutral Tandem's BDFB meter by performing its own meter reading via an alternate method, such as, but not limited to, an ammeter. If the meter readings vary by more than ten (10) % or five (5) Amps, whichever is greater, the Parties agree to perform a joint investigation. If Neutral Tandem's BDFB meter is found to be in error, then Neutral Tandem agrees to recalibrate, repair, or replace its meter as required. The Parties recognize that the meter readings discussed in this Attachment are instantaneous readings that can experience minor fluctuations due to usage traffic, voltage fluctuations, and calibration of the meters themselves. The readings must vary by more than ten (10) % or five (5) Amps, whichever is greater, before any recalibration, repair, or replacement will be required. If the BellSouth reading is substantiated, BellSouth shall adjust Neutral Tandem's billing retroactive to the beginning of the quarter for which the last meter reading was taken.

8.9.11.13 When Neutral Tandem submits the appropriate Initial or Subsequent Application for a specific caged collocation arrangement in a particular BellSouth Premises, BellSouth will provide the associated Application Response pursuant to Section 6 above. It will then be the responsibility of Neutral Tandem to submit a BFFO. After BellSouth receives the BFFO from Neutral Tandem, the Initial or Subsequent Application will be completed by BellSouth within the provisioning intervals contained in Section 7 above and Neutral Tandem will be notified of the Space Ready Date or when the appropriate record and database changes have been made by BellSouth to reflect Neutral Tandem's conversion to the metered

power rates (which will be considered the "Space Ready Date" for purposes of a Subsequent Application submitted to convert a specific caged collocation arrangement in a particular BellSouth Premises to the metered power rates).

8.9.11.14 BellSouth will not permit Neutral Tandem to elect an earlier Space Acceptance Date than the Space Ready Date for any request submitted via a Subsequent Application for an existing caged collocation arrangement. When a Subsequent Application is used to elect metered power and there are no other changes requested, billing for the recurring charges associated with metered power will begin upon the Space Ready Date. If Neutral Tandem occupies the space prior to the Space Ready Date, for Initial Application requests only, the date Neutral Tandem occupies the space will be deemed the new Space Acceptance Date and billing for metered power will begin on that date. When Neutral Tandem moves to metered power the number of fused amps of DC Power requested by Neutral Tandem on its Initial or Subsequent Application will be used for calculating the number of amps to be billed until such time as BellSouth or its BellSouth Certified Supplier can perform, under the currently existing quarterly meter reading schedule, a reading of Neutral Tandem's power usage for the requested caged Collocation Space. As soon as this reading has been taken, BellSouth will adjust Neutral Tandem's billing accordingly to reflect the actual metered usage back to the Space Acceptance Date. BellSouth will also use this reading for billing purposes until the next quarterly meter reading is performed by BellSouth or its BellSouth Certified Supplier.

8.9.11.15 Neutral Tandem agrees to submit a Subsequent Application to notify BellSouth when Neutral Tandem has removed or installed telecommunications equipment in Neutral Tandem's physical Collocation Space to ensure that Neutral Tandem's existing fused DC power capacity is sufficiently engineered to accommodate the power requirements associated with the installation of additional equipment in Neutral Tandem's Collocation Space. An associated change in power usage will be reflected in the next quarterly power measurement billing cycle.

8.9.11.16 BellSouth will bill Neutral Tandem a monthly recurring charge per caged Collocation Space for each arrangement that Neutral Tandem has converted to metered power or for new caged Collocation Spaces under the election of metered power. This "Meter Reading" monthly recurring rate element will be assessed per circuit for each circuit read by BellSouth or its BellSouth Certified Supplier, at the rates set forth in Exhibit B.

8.9.12 In South Carolina, Neutral Tandem has the option to purchase power directly from an electric utility company where technically feasible and where space is available in a requested BellSouth Premises. Under such option, Neutral Tandem is responsible for contracting with the electric utility company for its own power feed and meter, and is financially responsible for purchasing all equipment necessary to accomplish the conversion of the commercial AC power to DC power, including inverters, batteries, power boards, bus bars, BDFBs, backup power supplies and power cabling. The actual work to install this arrangement

must be performed by a BellSouth Certified Supplier hired by Neutral Tandem. Neutral Tandem's BellSouth Certified Supplier must comply with all applicable national, regional, state and local safety, electrical, fire and building codes, including the NESC standards, in the installing of this power arrangement, just as BellSouth is required to comply with these codes. Neutral Tandem must submit an application to BellSouth for the appropriate amount of Collocation Space that Neutral Tandem requires in order to install this type of power arrangement. BellSouth will evaluate the request and determine if the appropriate amount of space is available within the BellSouth Premises for the installation of Neutral Tandem's power equipment and facilities. This type of power arrangement must be located in an appropriate area in the BellSouth Premises that has been properly conditioned for the installation of power equipment and conforms to the applicable national, regional, state and local safety, electrical, fire and building codes. BellSouth shall waive the application fee or any other nonrecurring charge that would otherwise be due from a CLEC that decides to reconfigure an existing collocation power arrangement so as to purchase power directly from an electric utility company as provided herein. Neutral Tandem shall be responsible for the recurring charges associated with the additional space needed in the BellSouth Premises for this type of power arrangement, including space required to place associated power-related equipment and facilities (i.e., batteries, generator, fuse panel, power meter, etc.). If there is no space available for this type of power arrangement in the requested BellSouth Premises, BellSouth may seek a waiver of these requirements from the Commission for the BellSouth Premises requested. Neutral Tandem would have the option to order its power needs directly from BellSouth.

8.10 Central Office Cable Installation. Cable Installation fees will be assessed on a per entrance cable basis. This nonrecurring charge will be billed by BellSouth upon receipt of Neutral Tandem's BFFO. Charges for cable racking, cable support structure and entrance fiber structure are recurring fees and will also be assessed according to the rates set forth in Exhibit B.

8.11 Central Office Cable Records. Cable Records charges apply for work activities required to build or remove existing cable records assigned to Neutral Tandem in BellSouth's database systems. The VG/DS0 per cable record charge is for a maximum of thirty-six hundred (3,600) records per request. The fiber cable record charge is for a maximum of ninety-nine (99) records per request. Cable Record fees will be assessed as a nonrecurring charge, upon receipt of Neutral Tandem's BFFO.

8.12 Security Escort. After Neutral Tandem has used its one (1) accompanied site visit, pursuant to Section 5.12.1 above, and prior to Neutral Tandem's completion of the BellSouth Security Training requirements, contained in Section 12 below, a security escort will be required when Neutral Tandem's employees, approved agent, supplier, or Guest(s) desire access to the entrance manhole or a BellSouth Premises. The rates for security escort service are assessed pursuant to the fee

schedule contained in Exhibit B, beginning with the scheduled escort time agreed to by the Parties. BellSouth will wait for one-half (1/2) hour after the scheduled escort time to provide such requested escort service and Neutral Tandem shall pay for such half-hour charges in the event Neutral Tandem's employees, approved agent, supplier or Guest(s) fails to show up for the scheduled escort appointment.

8.13 Other. If no collocation rate element and associated rate is identified in Exhibit B, the Parties, upon request by either Party, will negotiate the rate for the specific collocation service or function identified in this Attachment.

9 Insurance

9.1 Neutral Tandem shall, at its sole cost and expense, procure, maintain, and keep in force insurance as specified in this Section and underwritten by insurance companies licensed to do business in the states applicable under this Agreement and having a Best's Insurance Rating of A.

9.2 Neutral Tandem shall maintain the following specific coverage:

9.2.1 Commercial General Liability coverage in the amount of ten million dollars ($10,000,000) or a combination of Commercial General Liability and Excess/Umbrella coverage totaling not less than ten million dollars ($10,000,000). BellSouth shall be named as an Additional Insured on the Commercial General Liability policy as specified herein.

9.2.2 Statutory Workers Compensation coverage and Employers Liability coverage in the amount of one hundred thousand dollars ($100,000) each accident, one hundred thousand dollars ($100,000) each employee by disease, and five hundred thousand dollars ($500,000) policy limit by disease.

9.2.3 All Risk Property coverage on a full replacement cost basis insuring all of Neutral Tandem's real and personal property situated on or within a BellSouth Premises.

9.2.4 Neutral Tandem may elect to purchase business interruption and contingent business interruption insurance, having been advised that BellSouth assumes no liability for loss of profit or revenues should an interruption of service occur.

9.3 The limits set forth in Section 9.2 above may be increased by BellSouth from time to time during the term of this Agreement, upon thirty (30) days notice to Neutral Tandem, to at least such minimum limits as shall then be customary with respect to comparable occupancy of BellSouth structures.

9.4 All policies purchased by Neutral Tandem shall be deemed to be primary and not contributing to or in excess of any similar coverage purchased by BellSouth. All insurance must be in effect on or before the date equipment is delivered to BellSouth's Premises and shall remain in effect for the term of this Agreement or until all of Neutral Tandem's property has been removed from BellSouth's Premises, whichever period is longer. If Neutral Tandem fails to maintain required coverage, BellSouth may pay the premiums thereon and seek

reimbursement of same from Neutral Tandem.

9.5 Neutral Tandem shall submit certificates of insurance reflecting the coverage required pursuant to this Section within a minimum of ten (10) business days prior to the commencement of any work in the Collocation Space. Failure to meet this interval may result in construction and equipment installation delays. Neutral Tandem shall arrange for BellSouth to receive thirty (30) business days' advance notice of cancellation or non-renewal from Neutral Tandem's insurance company. Neutral Tandem shall forward a certificate of insurance and notice of cancellation/non-renewal to BellSouth at the following address:

BellSouth Telecommunications, Inc.
Attn: Risk Management Office – Finance
17F54 BellSouth Center
675 W. Peachtree Street
Atlanta, GA 30375

9.6 Neutral Tandem must conform to recommendations made by BellSouth's fire insurance company to the extent BellSouth has agreed to, or shall hereafter agree to, such recommendations.

9.7 Self Insurance. If Neutral Tandem's net worth exceeds five hundred million dollars ($500,000,000), Neutral Tandem may elect to request self-insurance status in lieu of obtaining any of the insurance required in Section 9.2 above. Neutral Tandem shall provide audited financial statements to BellSouth thirty (30) days prior to the commencement of any work in the Collocation Space. BellSouth shall then review such audited financial statements and respond in writing to Neutral Tandem in the event that self-insurance status is not granted to Neutral Tandem. If BellSouth approves Neutral Tandem for self-insurance, Neutral Tandem shall annually furnish to BellSouth, and keep current, evidence of such net worth that is attested to by one of Neutral Tandem's corporate officers. The ability to self-insure shall continue so long as Neutral Tandem meets all of the requirements of this Section. If Neutral Tandem subsequently no longer satisfies the requirements of this Section, Neutral Tandem is required to purchase insurance as indicated by Section 9.2 above.

9.8 The net worth requirements set forth in Section 9.7 above may be increased by BellSouth from time to time during the term of this Agreement upon thirty (30) days' notice to Neutral Tandem to at least such minimum limits as shall then be customary with respect to comparable occupancy of a BellSouth Premises.

9.9 Failure to comply with the provisions of this Section will be deemed a material breach of this Attachment.

10 Mechanics Lien

10.1 If any mechanics lien or other liens are filed against property of either Party (BellSouth or Neutral Tandem), or any improvement thereon by reason of or arising out of any labor or materials furnished or alleged to have been furnished or

to be furnished to or for the other Party or by reason of any changes, or additions to said property made at the request or under the direction of the other Party, the other Party directing or requesting those changes shall, within thirty (30) business days after receipt of written notice from the Party against whose property said lien has been filed, either pay such lien or cause the same to be bonded off the affected property in the manner provided by law. The Party causing said lien to be placed against the property of the other shall also defend at its sole cost and expense, on behalf of the other, any action, suit or proceeding which may be brought for the enforcement of such liens and shall pay any damage and discharge any judgment entered thereon.

11 Inspections

11.1 BellSouth may conduct an inspection of Neutral Tandem's equipment and facilities in Neutral Tandem's Collocation Space(s) prior to the activation of facilities and/or services between Neutral Tandem's equipment and equipment of BellSouth. BellSouth may conduct an inspection if Neutral Tandem adds equipment and may otherwise conduct routine inspections at reasonable intervals mutually agreed upon by the Parties. BellSouth shall provide Neutral Tandem with a minimum of forty-eight (48) hours or two (2) business days, whichever is greater, advance notice of all such inspections. All costs of such inspections shall be borne by BellSouth.

12 Security and Safety Requirements

12.1 Unless otherwise specified, Neutral Tandem will be required, at its own expense, to conduct a statewide investigation of criminal history records for each Neutral Tandem employee hired in the past five (5) years being considered for work on a BellSouth Premises, for the states/counties where the Neutral Tandem employee has worked and lived for the past five (5) years. Where state law does not permit statewide collection or reporting, an investigation of the applicable counties is acceptable. Neutral Tandem shall not be required to perform this investigation if an affiliated company of Neutral Tandem has performed an investigation of the Neutral Tandem employee seeking access, if such investigation meets the criteria set forth above. This requirement will not apply if Neutral Tandem has performed a pre-employment statewide investigation of criminal history records of the Neutral Tandem employee for the states/counties where the Neutral Tandem employee has worked and lived for the past five (5) years or, where state law does not permit a statewide investigation, an investigation of the applicable counties.

12.2 Neutral Tandem will be required to administer to its personnel assigned to the BellSouth Premises security training either provided by BellSouth, or meeting criteria defined by BellSouth at BellSouth's Interconnection Web site, www.interconnection.bellsouth.com/guides.

12.3 Neutral Tandem shall provide its employees and agents with picture identification, which must be worn and visible at all times while in Neutral Tandem's Collocation Space or other areas in or around the BellSouth Premises.

The photo identification card shall bear, at a minimum, the employee's name and photo and Neutral Tandem's name. BellSouth reserves the right to remove from a BellSouth Premises any employee of Neutral Tandem not possessing identification issued by Neutral Tandem or who has violated any of BellSouth's policies as outlined in the CLEC Security Training documents. Neutral Tandem shall hold BellSouth harmless for any damages resulting from such removal of Neutral Tandem's personnel from a BellSouth Premises. Neutral Tandem shall be solely responsible for ensuring that any Guest(s) of Neutral Tandem is in compliance with all subsections of this Section.

12.4 Neutral Tandem shall not assign to the BellSouth Premises any personnel with records of felony criminal convictions. Neutral Tandem shall not assign to the BellSouth Premises any personnel with records of misdemeanor convictions, except for misdemeanor traffic violations, without advising BellSouth of the nature and gravity of the offense(s). BellSouth reserves the right to refuse building access to any of Neutral Tandem's personnel who have been identified to have misdemeanor criminal convictions. Notwithstanding the foregoing, in the event Neutral Tandem chooses not to advise BellSouth of the nature and gravity of any misdemeanor conviction, Neutral Tandem may, in the alternative, certify to BellSouth that it shall not assign to the BellSouth Premises any personnel with records of misdemeanor convictions (other than misdemeanor traffic violations).

12.4.1 Neutral Tandem shall not knowingly assign to the BellSouth Premises any individual who was a former employee of BellSouth and whose employment with BellSouth was terminated for a criminal offense, whether or not BellSouth sought prosecution of the individual for the criminal offense.

12.4.2 Neutral Tandem shall not knowingly assign to the BellSouth Premises any individual who was a former supplier of BellSouth and whose access to a BellSouth Premises was revoked due to the commission of a criminal offense, whether or not BellSouth sought prosecution of the individual for the criminal offense.

12.5 For each Neutral Tandem employee or agent hired by Neutral Tandem within the last five (5) years, who requires access to a BellSouth Premises to perform work in Neutral Tandem Collocation Space(s), Neutral Tandem shall furnish BellSouth certification that the aforementioned background check and security training were completed. This certification must be provided to and approved by BellSouth before an employee or agent will be granted such access to a BellSouth Premises. The certification will contain a statement that no felony convictions were found and certify that the employee completed the security training. If the employee's criminal history includes misdemeanor convictions, Neutral Tandem will disclose the nature of the convictions to BellSouth at that time. In the alternative, Neutral Tandem may certify to BellSouth that it shall not assign to the BellSouth Premises any personnel with records of misdemeanor convictions, other than misdemeanor traffic violations.

12.5.1 For all other Neutral Tandem employees requiring access to a BellSouth Premises pursuant to this Attachment, Neutral Tandem shall furnish BellSouth, prior to an employee gaining such access, a certification that the employee is not subject to the requirements of Section 12.5 above and that security training was completed by the employee.

12.6 At BellSouth's request, Neutral Tandem shall promptly remove from the BellSouth Premises any employee of Neutral Tandem that BellSouth does not wish to grant access to a BellSouth Premises: 1) pursuant to any investigation conducted by BellSouth, or 2) prior to the initiation of an investigation if an employee of Neutral Tandem is found interfering with the property or personnel of BellSouth or another collocated telecommunications carrier, provided that an investigation shall be promptly commenced by BellSouth.

12.7 Security Violations. BellSouth reserves the right to interview Neutral Tandem's employees, agents, suppliers, or Guests in the event of wrongdoing in or around a BellSouth Premises or involving BellSouth's or another collocated telecommunications carrier's property or personnel, provided that BellSouth shall provide reasonable notice to Neutral Tandem's Security representative of such interview. Neutral Tandem and its employees, agents, suppliers, or Guests shall reasonably cooperate with BellSouth's investigation into allegations of wrongdoing or criminal conduct committed by, witnessed by, or involving Neutral Tandem's employees, agents, suppliers, or Guests. Additionally, BellSouth reserves the right to bill Neutral Tandem for all reasonable costs associated with investigations involving its employees, agents, suppliers, or Guests if it is established and mutually agreed in good faith that Neutral Tandem's employees, agents, suppliers, or Guests are responsible for the alleged act(s). BellSouth shall bill Neutral Tandem for BellSouth property, which is stolen or damaged, where an investigation determines the culpability of Neutral Tandem's employees, agents, suppliers, or Guests and where Neutral Tandem agrees, in good faith, with the results of such investigation. Neutral Tandem shall notify BellSouth in writing immediately in the event that Neutral Tandem discovers one of its employees, agents, suppliers, or Guests already working on the BellSouth Premises is a possible security risk. Upon request of the other Party, the Party who is the employer shall discipline consistent with its employment practices, up to and including removal from BellSouth's Premises, any employee found to have violated the security and safety requirements of this Section. Neutral Tandem shall hold BellSouth harmless for any damages resulting from such removal of Neutral Tandem's personnel from a BellSouth Premises.

12.8 Use of Supplies. Unauthorized use of equipment, supplies or other property by either Party, whether or not used routinely to provide telephone service will be strictly prohibited and handled appropriately. Costs associated with such unauthorized use may be charged to the offending Party, as may be all associated investigative costs.

12.9 Use of Official Lines. Except for non-toll calls necessary in the performance of their work, neither Party shall use the telephone(s) of the other Party on BellSouth's Premises. Charges for unauthorized telephone calls may be charged to the offending Party, as may be all associated investigative costs.

12.10 Accountability. Full compliance with the Security requirements of this Section shall in no way limit the accountability of either Party to the other for the improper actions of its employees, agents, suppliers, or Guests.

13 Destruction of Collocation Space

13.1 In the event a Collocation Space is wholly or partially damaged by fire, windstorm, hurricane, tornado, flood or by similar force majeure circumstances to such an extent as to be rendered wholly unsuitable for Neutral Tandem's permitted use hereunder, then either Party may elect within ten (10) days after such damage, to terminate occupancy of the damaged Collocation Space, and if either Party shall so elect, by giving the other written notice of termination, both Parties shall stand released of and from further liability under the terms hereof. If the Collocation Space shall suffer only minor damage and shall not be rendered wholly unsuitable for Neutral Tandem's permitted use, or is damaged and the option to terminate is not exercised by either Party, BellSouth covenants and agrees to proceed promptly without expense to Neutral Tandem, except for improvements not to the property of BellSouth, to repair the damage. BellSouth shall have a reasonable time within which to rebuild or make any repairs, and such rebuilding and repairing shall be subject to delays caused by storms, shortages of labor and materials, government regulations, strikes, walkouts, and causes beyond the control of BellSouth, which causes shall not be construed as limiting factors, but as exemplary only. Neutral Tandem may, at its own expense, accelerate the rebuild of its Collocation Space and equipment provided, however, that a BellSouth Certified Supplier is used and the necessary space preparation has been completed. If Neutral Tandem's acceleration of the project increases the cost of the project, then those additional charges will be incurred at Neutral Tandem's expense. Where allowed and where practical, Neutral Tandem may erect a temporary facility while BellSouth rebuilds or makes repairs. In all cases where the Collocation Space shall be rebuilt or repaired, Neutral Tandem shall be entitled to an equitable abatement of rent and other charges, depending upon the unsuitability of the Collocation Space for Neutral Tandem's permitted use, until such Collocation Space is fully repaired and restored and Neutral Tandem's equipment installed therein (but in no event later than thirty (30) days after the Collocation Space is fully repaired and restored). Where Neutral Tandem has placed an Adjacent Arrangement pursuant to Section 3.4 above, Neutral Tandem shall have the sole responsibility to repair or replace said Adjacent Arrangement provided herein. Pursuant to this Section, BellSouth will restore the associated services to the Adjacent Arrangement.

14 Eminent Domain

14.1 If the whole of a Collocation Space or Adjacent Arrangement shall be taken by any public authority under the power of eminent domain, then this Attachment shall terminate with respect to such Collocation Space or Adjacent Arrangement as of the date possession shall be taken by such public authority and rent and other charges for the Collocation Space or Adjacent Arrangement shall be paid up to that day with a proportionate refund by BellSouth of such rent and charges as may have been paid in advance for a period subsequent to the date of the taking. If any part of the Collocation Space or Adjacent Arrangement shall be taken under eminent domain, BellSouth and Neutral Tandem shall each have the right to terminate this Attachment with respect to such Collocation Space or Adjacent Arrangement and declare the same null and void, by written notice of such intention to the other Party within ten (10) days after such taking.

15 Nonexclusivity

15.1 Neutral Tandem understands that this Attachment is not exclusive and that BellSouth may enter into similar agreements with other Parties. Assignment of Collocation Space pursuant to all such agreements shall be determined by space availability and made on a first come, first serve basis.

ENVIRONMENTAL AND SAFETY PRINCIPLES

The following principles provide basic guidance on environmental and safety issues when applying for and establishing physical collocation arrangements.

1. General Principles

1.1 Compliance with Applicable Law. BellSouth and Neutral Tandem agree to comply with applicable federal, state, and local environmental and safety laws and regulations including U.S. Environmental Protection Agency (USEPA) regulations issued under the Clean Air Act (CAA), Clean Water Act (CWA), Resource Conservation and Recovery Act (RCRA), Comprehensive Environmental Response, Compensation and Liability Act (CERCLA), Superfund Amendments and Reauthorization Act (SARA), the Toxic Substances Control Act (TSCA), and Occupational Safety and Healthy Act (OSHA) regulations issued under the OSHA of 1970, as amended and National Fire Protection Association (NFPA), NEC and NESC (Applicable Laws) requirements. Each Party shall notify the other if compliance inspections are conducted by regulatory agencies and/or citations are issued that relate to any aspect of this Attachment.

1.2 Notice. BellSouth and Neutral Tandem shall provide notice to the other, including any Material Safety Data Sheets (MSDSs), of known and recognized physical hazards or Hazardous Chemicals existing on site or brought on site. A Hazardous Chemical inventory list is posted on an OSHA Poster and updated annually at each Central Office. This Poster is normally located near the front entrance of the building or in the lounge area. Each Party is required to provide specific notice for known potential Imminent Danger conditions. Neutral Tandem should contact 1-800-743-6737 for any BellSouth MSDS required.

1.3 Practices/Procedures. BellSouth may make available additional environmental control procedures for Neutral Tandem to follow when working at a BellSouth Premises (See Section 2, below). These practices/procedures will represent the regular work practices required to be followed by the employees and suppliers of BellSouth for environmental protection. Neutral Tandem will require its suppliers, agents, Guests, and others accessing the BellSouth Premises to comply with these practices. Section 2 below lists the Environmental categories where BellSouth practices should be followed by Neutral Tandem when operating in the BellSouth Premises.

1.4 Environmental and Safety Inspections. BellSouth reserves the right to inspect the Neutral Tandem space with proper notification. BellSouth reserves the right to stop any Neutral Tandem work operation that imposes Imminent Danger to the environment, employees or other persons in or around a BellSouth Premises.

1.5 Hazardous Materials Brought On Site. Any hazardous materials brought into, used, stored or abandoned at a BellSouth Premises by Neutral Tandem are owned by and considered the property of Neutral Tandem. Neutral Tandem will

indemnify BellSouth for claims, lawsuits or damages to persons or property caused by these materials. Without prior written BellSouth approval, no substantial new safety or environmental hazards can be created by Neutral Tandem or different hazardous materials used by Neutral Tandem at a BellSouth Premises. Neutral Tandem must demonstrate adequate emergency response capabilities for the materials used by Neutral Tandem or remaining at a BellSouth Premises.

1.6 Spills and Releases. When contamination is discovered at a BellSouth Premises, either Party discovering the condition must notify the other Party. All Spills or Releases of regulated materials will immediately be reported by Neutral Tandem to BellSouth.

1.7 Coordinated Environmental Plans and Permits. BellSouth and Neutral Tandem will coordinate plans, permits or information required to be submitted to government agencies, such as emergency response plans, spill prevention control and countermeasures (SPCC) plans and community reporting. If fees are associated with filing, BellSouth and Neutral Tandem will develop a cost sharing procedure. If BellSouth's permit or EPA identification number must be used, Neutral Tandem must comply with all of BellSouth's permit conditions and environmental processes, including environmental "best management practices (BMP)" (see Section 2, below) and the selection of BST disposition vendors and disposal sites.

1.8 Environmental and Safety Indemnification. BellSouth and Neutral Tandem shall indemnify, defend and hold harmless the other Party from and against any claims (including, without limitation, third-party claims for personal injury or death or real or personal property damage), judgments, damages (including direct and indirect damages and punitive damages), penalties, fines, forfeitures, costs, liabilities, interest and losses arising in connection with the violation or alleged violation of any Applicable Law or contractual obligation or the presence or alleged presence of contamination arising out of the acts or omissions of the indemnifying Party, its employees, agents, suppliers, or Guests concerning its operations at a BellSouth Premises.

2. Categories for Consideration of Environmental Issues

2.1 When performing functions that fall under the following Environmental categories on BellSouth's Premises, Neutral Tandem agrees to comply with the applicable sections of the current issue of BellSouth's Environmental and Safety Methods and Procedures (M&Ps), incorporated herein by this reference. Neutral Tandem further agrees to cooperate with BellSouth to ensure that Neutral Tandem's employees, agents, suppliers and/or Guests are knowledgeable of and satisfy those provisions of BellSouth's Environmental M&Ps, which apply to the specific Environmental function being performed by Neutral Tandem, its employees, agents, suppliers, and/or Guests.

2.2 The most current version of the reference documentation must be requested from

Neutral Tandem's BellSouth Regional Contract Manager (RCM).

Environmental Categories	Environmental Issues	Addressed By The Following Documentation
Disposal of hazardous material or other regulated material (e.g., batteries, fluorescent tubes, solvents & cleaning materials)	Compliance with all applicable local, state & federal laws and regulations Pollution liability insurance EVET approval of supplier	Std T&C 450 Fact Sheet Series 17000 Std T&C 660-3 Approved Environmental Vendor List (Contact RCM Representative)
Emergency response	Hazmat/waste release/spill fire safety emergency	Fact Sheet Series 17000 Building Emergency Operations Plan (EOP) (specific to and located on BellSouth's Premises)
Contract labor/outsourcing for services with environmental implications to be performed on BellSouth Premises (e.g., disposition of hazardous material/waste; maintenance of storage tanks)	Compliance with all applicable local, state and federal laws and regulations Performance of services in accordance with BST's environmental M&Ps Insurance	Std T&C 450 Std T&C 450-B (Contact RCM Representative for copy of appropriate E/S M&Ps.) Std T&C 660
Transportation of hazardous material	Compliance with all applicable local, state & federal laws and regulations Pollution liability insurance EVET approval of supplier	Std T&C 450 Fact Sheet Series 17000 Std T&C 660-3 Approved Environmental Vendor List (Contact RCM Representative)
Maintenance/operations work which may produce a waste Other maintenance work	Compliance with all applicable local, state & federal laws and regulations Protection of BST employees and equipment	Std T&C 450 29 C.F.R. § 1910.147 (OSHA Standard) 29 C.F.R. § 1910 Subpart O

		(OSHA Standard)
Janitorial service	All waste removal and disposal must conform to all applicable federal, state and local regulations All Hazardous Material and Waste Asbestos notification and protection of employees and equipment	Procurement Manager (CRES Related Matters)-BST Supply Chain Services Fact Sheet Series 17000 GU-BTEN-001BT, Chapter 3 BSP 010-170-001BS (Hazcom)
Manhole cleaning	Compliance with all applicable local, state & federal laws and regulations Pollution liability insurance EVET approval of supplier	Std T&C 450 Fact Sheet 14050 BSP 620-145-011PR Issue A, August 1996 Std T&C 660-3 Approved Environmental Vendor List (Contact RCM Representative)
Removing or disturbing building materials that may contain asbestos	Asbestos work practices	GU-BTEN-001BT, Chapter 3 for questions regarding removing or disturbing materials that contain asbestos, call the BellSouth Building Service Center: AL, MS, TN, KY & LA (local area code) 557-6194 FL, GA, NC & SC (local area code) 780-2740

3. Definitions

Generator. Under RCRA, the person whose act produces a Hazardous Waste, as defined in 40 C.F.R. § 261, or whose act first causes a Hazardous Waste to become subject to regulation. The Generator is legally responsible for the proper management and disposal of Hazardous Wastes in accordance with regulations.

Hazardous Chemical. As defined in the U.S. OSHA hazard communications standard (29 C.F.R. § 1910.1200), any chemical which is a health hazard or physical hazard.

Hazardous Waste. As defined in Section 1004 of RCRA.

Imminent Danger. Any conditions or practices at a BellSouth Premises which are such that a danger exists which could reasonably be expected to cause immediate death or serious harm to people or immediate significant damage to the environment or natural resources.

Spill or Release. As defined in Section 101 of CERCLA.

4. Acronyms

RCM – Regional Collocation Manager (f/k/a Account Team Collocation Coordinator)

BST – BellSouth Telecommunications

CRES – Corporate Real Estate and Services (formerly PS&M)

DEC/LDEC – Department Environmental Coordinator/Local Department Environmental Coordinator

E/S – Environmental/Safety

EVET – Environmental Vendor Evaluation Team

GU-BTEN-001BT – BellSouth Environmental Methods and Procedures

NESC – National Electrical Safety Codes

P&SM – Property & Services Management

Std T&C – Standard Terms & Conditions

RESALE DISCOUNTS & RATES - South Carolina																	Att: 1 Exh: D
CATEGORY	RATE ELEMENTS	Interim	Zone	BCS	USOC	RATES($)					Svc Order Submitted Elec per LSR	Svc Order Submitted Manually per LSR	Incremental Charge - Manual Svc Order vs. Electronic-1st	Incremental Charge - Manual Svc Order vs. Electronic-Add'l	Incremental Charge - Manual Svc Order vs. Electronic-Disc 1st	Incremental Charge - Manual Svc Order vs. Electronic-Disc Add'l
						Rec	Nonrecurring		Nonrecurring Disconnect		OSS Rates($)					
							First	Add'l	First	Add'l	SOMEC	SOMAN	SOMAN	SOMAN	SOMAN	SOMAN
RESALE APPLICABLE DISCOUNTS																
	Residence %					14.80										
	Business %					14.80										
	CSAs %					8.98										
OPERATIONS SUPPORT SYSTEMS (OSS) - "REGIONAL RATES"																
	NOTE: (1) CLEC should contact its contract negotiator if it prefers the "state specific" OSS charges as ordered by the State Commissions. The OSS charges currently contained in this rate exhibit are the BellSouth "regional" service ordering charges. CLEC may elect either the state specific Commission ordered rates for the service ordering charges, or CLEC may elect the regional service ordering charge, however, CLEC can not obtain a mixture of the two regardless if CLEC has a interconnection contract established in each of the 9 states.															
	OSS - Electronic Service Order Charge, Per Local Service Request (LSR) - Resale Only				SOMEC		3.50	0.00	3.50	0.00						
	OSS - Manual Service Order Charge, Per Local Service Request (LSR) - Resale Only				SOMAN		19.99	0.00	19.99	0.00						
ODUF/EODUF SERVICES																
	OPTIONAL DAILY USAGE FILE (ODUF)															
	ODUF: Recording, per message					0.0000216										
	ODUF: Message Processing, per message					0.004704										
	ODUF: Message Processing, per Magnetic Tape provisioned					48.87										
	ODUF: Data Transmission (CONNECT:DIRECT), per message					0.00010863										
	ENHANCED OPTIONAL DAILY USAGE FILE (EODUF)															
	EODUF: Message Processing, per message					0.258301										
SELECTIVE CALL ROUTING USING LINE CLASS CODES (SCR-LCC)																
	Selective Routing Per Unique Line Class Code Per Request Per Switch						84.89	84.89	14.14	14.14						
DIRECTORY ASSISTANCE CUSTOM BRANDING ANNOUNCEMENT via OLNS SOFTWARE																
	Recording of DA Custom Branded Announcement						3,000.00	3,000.00								
	Loading of DA Custom Branded Anouncement per Switch per OCN						1,170.00	1,170.00								
DIRECTORY ASSISTANCE UNBRANDING via OLNS SOFTWARE																
	Loading of DA per OCN (1 OCN per Order)						420.00	420.00								
	Loading of DA per Switch per OCN						16.00	16.00								
OPERATOR ASSISTANCE CUSTOM BRANDING ANNOUNCEMENT via OLNS SOFTWARE																
	Recording of Custom Branded OA Announcement						7,000.00	7,000.00								
	Loading of Custom Branded OA Announcement per shelf/NAV per OCN						500.00	500.00								
	Loading of OA Custom Branded Announcement per Switch per OCN						1,170.00	1,170.00								
OPERATOR ASSISTANCE UNBRANDING via OLNS SOFTWARE																
	Loading of OA per OCN (Regional)						1,200.00	1,200.00								

RESALE DISCOUNTS & RATES - Tennessee																	Att: 1 Exh: D
CATEGORY	RATE ELEMENTS	Interim	Zone	BCS	USOC	RATES($)					Svc Order Submitted Elec per LSR	Svc Order Submitted Manually per LSR	Incremental Charge - Manual Svc Order vs. Electronic-1st	Incremental Charge - Manual Svc Order vs. Electronic-Add'l	Incremental Charge - Manual Svc Order vs. Electronic-Disc 1st	Incremental Charge - Manual Svc Order vs. Electronic-Disc Add'l
						Rec	Nonrecurring		Nonrecurring Disconnect		OSS Rates($)					
							First	Add'l	First	Add'l	SOMEC	SOMAN	SOMAN	SOMAN	SOMAN	SOMAN
RESALE APPLICABLE DISCOUNTS																
	Residence %					16.00										
	Business %					16.00										
	CSAs %					16.00										
OPERATIONS SUPPORT SYSTEMS (OSS) - "REGIONAL RATES"																
	NOTE: (1) CLEC should contact its contract negotiator if it prefers the "state specific" OSS charges as ordered by the State Commissions. The OSS charges currently contained in this rate exhibit are the BellSouth "regional" service ordering charges. CLEC may elect either the state specific Commission ordered rates for the service ordering charges, or CLEC may elect the regional service ordering charge, however, CLEC can not obtain a mixture of the two regardless if CLEC has a interconnection contract established in each of the 9 states.															
	OSS - Electronic Service Order Charge, Per Local Service Request (LSR) - Resale Only				SOMEC		3.50	0.00	3.50	0.00						
	OSS - Manual Service Order Charge, Per Local Service Request (LSR) - Resale Only				SOMAN		19.99	0.00	19.99	0.00						
ODUF/EODUF SERVICES																
	OPTIONAL DAILY USAGE FILE (ODUF)															
	ODUF: Recording, per message					0.0000044										
	ODUF: Message Processing, per message					0.002446										
	ODUF: Message Processing, per Magnetic Tape provisioned					35.54										
	ODUF: Data Transmission (CONNECT:DIRECT), per message					0.0000339										
	ENHANCED OPTIONAL DAILY USAGE FILE (EODUF)															
	EODUF: Message Processing, per message					0.229779										
SELECTIVE CALL ROUTING USING LINE CLASS CODES (SCR-LCC)																
	Selective Routing Per Unique Line Class Code Per Request Per Switch						179.60	179.60								
DIRECTORY ASSISTANCE CUSTOM BRANDING ANNOUNCEMENT via OLNS SOFTWARE																
	Recording of DA Custom Branded Announcement						3,000.00									
	Loading of DA Custom Branded Anouncement per Switch per OCN						1,170.00									
DIRECTORY ASSISTANCE UNBRANDING via OLNS SOFTWARE																
	Loading of DA per OCN (1 OCN per Order)						420.00	420.00								
	Loading of DA per Switch per OCN						16.00	16.00								
OPERATOR ASSISTANCE CUSTOM BRANDING ANNOUNCEMENT via OLNS SOFTWARE																
	Recording of Custom Branded OA Announcement						7,000.00	7,000.00								
	Loading of Custom Branded OA Announcement per shelf/NAV per OCN						500.00	500.00								
	Loading of OA Custom Branded Announcement per Switch per OCN						1,170.00	1,170.00								
OPERATOR ASSISTANCE UNBRANDING via OLNS SOFTWARE																
	Loading of OA per OCN (Regional)						1,200.00	1,200.00								

UNBUNDLED NETWORK ELEMENTS - South Carolina																	Att: 2 Exh: A
CATEGORY		RATE ELEMENTS	Interim	Zone	BCS	USOC	RATES($)					Svc Order Submitted Elec per LSR	Svc Order Submitted Manually per LSR	Incremental Charge - Manual Svc Order vs. Electronic-1st	Incremental Charge - Manual Svc Order vs. Electronic-Add'l	Incremental Charge - Manual Svc Order vs. Electronic-Disc 1st	Incremental Charge - Manual Svc Order vs. Electronic-Disc Add'l
							Rec	Nonrecurring		Nonrecurring Disconnect		OSS Rates($)					
								First	Add'l	First	Add'l	SOMEC	SOMAN	SOMAN	SOMAN	SOMAN	SOMAN
	The "Zone" shown in the sections for stand-alone loops or loops as part of a combination refers to Geographically Deaveraged UNE Zones. To view Geographically Deaveraged UNE Zone Designations by Central Office, refer to internet Website: http://www.interconnection.bellsouth.com/become_a_clec/html/interconnection.htm																
OPERATIONS SUPPORT SYSTEMS (OSS) - "REGIONAL RATES"																	
	NOTE: (1) CLEC should contact its contract negotiator if it prefers the "state specific" OSS charges as ordered by the State Commissions. The OSS charges currently contained in this rate exhibit are the BellSouth "regional" service ordering charges. CLEC may elect either the state specific Commission ordered rates for the service ordering charges, or CLEC may elect the regional service ordering charge, however, CLEC can not obtain a mixture of the two regardless if CLEC has a interconnection contract established in each of the 9 states.																
	NOTE: (2) Any element that can be ordered electronically will be billed according to the SOMEC rate listed in this category. Please refer to BellSouth's Local Ordering Handbook (LOH) to determine if a product can be ordered electronically. For those elements that cannot be ordered electronically at present per the LOH, the listed SOMEC rate in this category reflects the charge that would be billed to a CLEC once electronic ordering capabilities come on-line for that element. Otherwise, the manual ordering charge, SOMAN, will be applied to a CLECs bill when it submits an LSR to BellSouth.																
		OSS - Electronic Service Order Charge, Per Local Service Request (LSR) - UNE Only				SOMEC		3.50	0.00	3.50	0.00						
		OSS - Manual Service Order Charge, Per Local Service Request (LSR) - UNE Only				SOMAN		15.69	0.00	1.97	0.00						
UNE SERVICE DATE ADVANCEMENT CHARGE																	
	NOTE: The Expedite charge will be maintained commensurate with BellSouth's FCC No.1 Tariff, Section 5 as applicable.																
		UNE Expedite Charge per Circuit or Line Assignable USOC, per Day			UAL, UEANL, UCL, UEF, UDF, UEQ, UDL, UENTW, UDN, UEA, UHL, ULC, USL, U1T12, U1T48, U1TD1, U1TD3, U1TDX, U1TO3, U1TS1, U1TVX, UC1BC, UC1BL, UC1CC, UC1CL, UC1DC, UC1DL, UC1EC, UC1EL, UC1FC, UC1FL, UC1GC, UC1GL, UC1HC, UC1HL, UDL12, UDL48, UDLO3, UDLSX, UE3, ULD12, ULD48, ULDD1, ULDD3, ULDDX, ULDO3, ULDS1, ULDVX, UNC1X, UNC3X, UNCDX, UNCNX, UNCSX, UNCVX, UNLD1, UNLD3, UXTD1, UXTD3, UXTS1, U1TUC, U1TUD, U1TUB, U1TUA,NTCVG, NTCUD, NTCD1	SDASP		200.00									
ORDER MODIFICATION CHARGE																	
		Order Modification Charge (OMC)						26.21	0.00	0.00	0.00						
		Order Modification Additional Dispatch Charge (OMCAD)						150.00	0.00	0.00	0.00						
UNBUNDLED EXCHANGE ACCESS LOOP																	
	2-WIRE ANALOG VOICE GRADE LOOP																
		2-Wire Analog Voice Grade Loop - Service Level 1- Zone 1		1	UEANL	UEAL2	14.94	37.92	17.62	23.56	5.32						
		2-Wire Analog Voice Grade Loop - Service Level 1- Zone 2		2	UEANL	UEAL2	21.39	37.92	17.62	23.56	5.32						
		2-Wire Analog Voice Grade Loop - Service Level 1- Zone 3		3	UEANL	UEAL2	26.72	37.92	17.62	23.56	5.32						
		2-Wire Analog Voice Grade Loop - Service Level 1- Zone 1		1	UEANL	UEASL	14.94	37.92	17.62	23.56	5.32						
		2-Wire Analog Voice Grade Loop - Service Level 1- Zone 2		2	UEANL	UEASL	21.39	37.92	17.62	23.56	5.32						
		2-Wire Analog Voice Grade Loop - Service Level 1- Zone 3		3	UEANL	UEASL	26.72	37.92	17.62	23.56	5.32						
		Tag Loop at End User Premise			UEANL	URETL		8.95	0.88								
		Loop Testing - Basic 1st Half Hour			UEANL	URET1		34.23	0.00								
		Loop Testing - Basic Additional Half Hour			UEANL	URETA		19.90	19.90								
		Manual Order Coordination for UVL-SL1s (per loop)			UEANL	UEAMC		8.17	8.17								
		Order Coordination for Specified Conversion Time for UVL-SL1 (per LSR)			UEANL	OCOSL		18.13	18.13								

UNBUNDLED NETWORK ELEMENTS - South Carolina														Att: 2 Exh: A			
CATEGORY		RATE ELEMENTS	Interim	Zone	BCS	USOC	RATES($)					Svc Order Submitted Elec per LSR	Svc Order Submitted Manually per LSR	Incremental Charge - Manual Svc Order vs. Electronic-1st	Incremental Charge - Manual Svc Order vs. Electronic-Add'l	Incremental Charge - Manual Svc Order vs. Electronic-Disc 1st	Incremental Charge - Manual Svc Order vs. Electronic-Disc Add'l
							Rec	Nonrecurring		Nonrecurring Disconnect		OSS Rates($)					
								First	Add'l	First	Add'l	SOMEC	SOMAN	SOMAN	SOMAN	SOMAN	SOMAN
		Unbundled Non-Design Voice Loop, billing for BST providing make up (Engineering Information - E.I.)			UEANL	UEANM		13.47	13.47								
		Unbundled Loop Service Rearrangement, change in loop facility, per circuit			UEANL	UREWO		15.81	8.96	23.56	5.32						
	2-WIRE Unbundled COPPER LOOP																
		2-Wire Unbundled Copper Loop - Non-Designed Zone 1		1	UEQ	UEQ2X	12.94	36.40	16.10	22.66	4.42						
		2 Wire Unbundled Copper Loop - Non-Designed - Zone 2		2	UEQ	UEQ2X	14.51	36.40	16.10	22.66	4.42						
		2 Wire Unbundled Copper Loop - Non-Designed - Zone 3		3	UEQ	UEQ2X	15.02	36.40	16.10	22.66	4.42						
		Unbundled Miscellaneous Rate Element, Tag Loop at End User Premise			UEQ	URETL		8.95	0.88								
		Loop Testing - Basic 1st Half Hour			UEQ	URET1		34.23	0.00								
		Loop Testing - Basic Additional Half Hour			UEQ	URETA		19.90	19.90								
		Manual Order Coordination 2 Wire Unbundled Copper Loop - Non-Designed (per loop)			UEQ	USBMC		8.17	8.17								
		Unbundled Copper Loop - Non-Design billing for BST providing make-up (Engineering Information - E.I.)			UEQ	UEQMU		13.47	13.47								
		Unbundled Loop Service Rearrangement, change in loop facility, per circuit			UEQ	UREWO		14.30	7.45	22.66	4.42						
UNBUNDLED EXCHANGE ACCESS LOOP																	
	2-WIRE ANALOG VOICE GRADE LOOP																
		2-Wire Analog Voice Grade Loop - Service Level 2 w/Loop or Ground Start Signaling - Zone 1		1	UEA	UEAL2	16.68	105.98	68.43	53.05	10.61						
		2-Wire Analog Voice Grade Loop - Service Level 2 w/Loop or Ground Start Signaling - Zone 2		2	UEA	UEAL2	23.13	105.98	68.43	53.05	10.61						
		2-Wire Analog Voice Grade Loop - Service Level 2 w/Loop or Ground Start Signaling - Zone 3		3	UEA	UEAL2	28.46	105.98	68.43	53.05	10.61						
		2-Wire Analog Voice Grade Loop - Service Level 2 w/Reverse Battery Signaling - Zone 1		1	UEA	UEAR2	16.68	105.98	68.43	53.05	10.61						
		2-Wire Analog Voice Grade Loop - Service Level 2 w/Reverse Battery Signaling - Zone 2		2	UEA	UEAR2	23.13	105.98	68.43	53.05	10.61						
		2-Wire Analog Voice Grade Loop - Service Level 2 w/Reverse Battery Signaling - Zone 3		3	UEA	UEAR2	28.46	105.98	68.43	53.05	10.61						
		Switch-As-Is Conversion rate per UNE Loop, Single LSR, (per DS0)			UEA	URESL		24.88	3.51								
		Unbundled Loop Service Rearrangement, change in loop facility, per circuit			UEA	UREWO		87.90	36.44								
		Loop Tagging - Service Level 2 (SL2)			UEA	URETL		11.24	1.10								
	4-WIRE ANALOG VOICE GRADE LOOP																
		4-Wire Analog Voice Grade Loop - Zone 1		1	UEA	UEAL4	32.59	132.38	94.83	59.35	14.61						
		4-Wire Analog Voice Grade Loop - Zone 2		2	UEA	UEAL4	43.89	132.38	94.83	59.35	14.61						
		4-Wire Analog Voice Grade Loop - Zone 3		3	UEA	UEAL4	43.38	132.38	94.83	59.35	14.61						
		Switch-As-Is Conversion rate per UNE Loop, Single LSR, (per DS0)			UEA	URESL		24.88	3.51								
		Unbundled Loop Service Rearrangement, change in loop facility, per circuit			UEA	UREWO		87.90	36.44								
	2-WIRE ISDN DIGITAL GRADE LOOP																
		2-Wire ISDN Digital Grade Loop - Zone 1		1	UDN	U1L2X	25.21	117.58	80.03	53.05	10.61						
		2-Wire ISDN Digital Grade Loop - Zone 2		2	UDN	U1L2X	32.76	117.58	80.03	53.05	10.61						
		2-Wire ISDN Digital Grade Loop - Zone 3		3	UDN	U1L2X	37.70	117.58	80.03	53.05	10.61						
		Unbundled Loop Service Rearrangement, change in loop facility, per circuit			UDN	UREWO		91.82	44.25								
	2-WIRE ASYMMETRICAL DIGITAL SUBSCRIBER LINE (ADSL) COMPATIBLE LOOP																
		2 Wire Unbundled ADSL Loop including manual service inquiry & facility reservation - Zone 1		1	UAL	UAL2X	12.19	120.84	70.56	50.37	7.93						
		2 Wire Unbundled ADSL Loop including manual service inquiry & facility reservation - Zone 2		2	UAL	UAL2X	13.71	120.84	70.56	50.37	7.93						
		2 Wire Unbundled ADSL Loop including manual service inquiry & facility reservation - Zone 3		3	UAL	UAL2X	14.14	120.84	70.56	50.37	7.93						
		2 Wire Unbundled ADSL Loop without manual service inquiry & facility reservaton - Zone 1		1	UAL	UAL2W	12.19	95.81	57.82	50.37	7.93						
		2 Wire Unbundled ADSL Loop without manual service inquiry & facility reservaton - Zone 2		2	UAL	UAL2W	13.71	95.81	57.82	50.37	7.93						
		2 Wire Unbundled ADSL Loop without manual service inquiry & facility reservaton - Zone 3		3	UAL	UAL2W	14.14	95.81	57.82	50.37	7.93						

UNBUNDLED NETWORK ELEMENTS - South Carolina — Att: 2 Exh: A

CATEGORY	RATE ELEMENTS	Interim	Zone	BCS	USOC	RATES($) Rec	Nonrecurring First	Nonrecurring Add'l	Nonrecurring Disconnect First	Nonrecurring Disconnect Add'l	Svc Order Submitted Elec per LSR (OSS Rates($) SOMEC)	Svc Order Submitted Manually per LSR (OSS Rates($) SOMAN)	Incremental Charge - Manual Svc Order vs. Electronic-1st (OSS Rates($) SOMAN)	Incremental Charge - Manual Svc Order vs. Electronic-Add'l (OSS Rates($) SOMAN)	Incremental Charge - Manual Svc Order vs. Electronic-Disc 1st (OSS Rates($) SOMAN)	Incremental Charge - Manual Svc Order vs. Electronic-Disc Add'l (OSS Rates($) SOMAN)
	Unbundled Loop Service Rearrangement, change in loop facility, per circuit			UAL	UREWO		86.38	40.48								
2-WIRE HIGH BIT RATE DIGITAL SUBSCRIBER LINE (HDSL) COMPATIBLE LOOP																
	2 Wire Unbundled HDSL Loop including manual service inquiry & facility reservation - Zone 1		1	UHL	UHL2X	9.58	129.52	79.24	50.37	7.93						
	2 Wire Unbundled HDSL Loop including manual service inquiry & facility reservation - Zone 2		2	UHL	UHL2X	10.92	129.52	79.24	50.37	7.93						
	2 Wire Unbundled HDSL Loop including manual service inquiry & facility reservation - Zone 3		3	UHL	UHL2X	11.40	129.52	79.24	50.37	7.93						
	2 Wire Unbundled HDSL Loop without manual service inquiry and facility reservation - Zone 1		1	UHL	UHL2W	9.58	104.49	66.50	50.37	7.93						
	2 Wire Unbundled HDSL Loop without manual service inquiry and facility reservation - Zone 2		2	UHL	UHL2W	10.92	104.49	66.50	50.37	7.93						
	2 Wire Unbundled HDSL Loop without manual service inquiry and facility reservation - Zone 3		3	UHL	UHL2W	11.40	104.49	66.50	50.37	7.93						
	Unbundled Loop Service Rearrangement, change in loop facility, per circuit			UHL	UREWO		86.32	40.48								
4-WIRE HIGH BIT RATE DIGITAL SUBSCRIBER LINE (HDSL) COMPATIBLE LOOP																
	4 Wire Unbundled HDSL Loop including manual service inquiry and facility reservation - Zone 1		1	UHL	UHL4X	16.02	158.18	107.89	55.12	10.38						
	4-Wire Unbundled HDSL Loop including manual service inquiry and facility reservation - Zone 2		2	UHL	UHL4X	14.33	158.18	107.89	55.12	10.38						
	4-Wire Unbundled HDSL Loop including manual service inquiry and facility reservation - Zone 3		3	UHL	UHL4X	16.84	158.18	107.89	55.12	10.38						
	4-Wire Unbundled HDSL Loop without manual service inquiry and facility reservation - Zone 1		1	UHL	UHL4W	16.02	133.14	95.16	55.12	10.38						
	4-Wire Unbundled HDSL Loop without manual service inquiry and facility reservation - Zone 2		2	UHL	UHL4W	14.33	133.14	95.16	55.12	10.38						
	4-Wire Unbundled HDSL Loop without manual service inquiry and facility reservation - Zone 3		3	UHL	UHL4W	16.84	133.14	95.16	55.12	10.38						
	Unbundled Loop Service Rearrangement, change in loop facility, per circuit			UHL	UREWO		86.32	40.48								
4-WIRE DS1 DIGITAL LOOP																
	4-Wire DS1 Digital Loop - Zone 1		1	USL	USLXX	79.51	253.03	157.89	44.80	11.73						
	4-Wire DS1 Digital Loop - Zone 2		2	USL	USLXX	136.00	253.03	157.89	44.80	11.73						
	4-Wire DS1 Digital Loop - Zone 3		3	USL	USLXX	229.15	253.03	157.89	44.80	11.73						
	Switch-As-Is Conversion rate per UNE Loop, Single LSR, (per DS1)			USL	URESL		24.88	3.51								
	Unbundled Loop Service Rearrangement, change in loop facility, per circuit			USL	UREWO		101.30	43.13								
4-WIRE 19.2, 56 OR 64 KBPS DIGITAL GRADE LOOP																
	4 Wire Unbundled Digital Loop 2.4 Kbps - Zone 1		1	UDL	UDL2X	29.93	126.66	89.12	59.35	14.61						
	4 Wire Unbundled Digital Loop 2.4 Kbps - Zone 2		2	UDL	UDL2X	33.99	126.66	89.12	59.35	14.61						
	4 Wire Unbundled Digital Loop 2.4 Kbps - Zone3		3	UDL	UDL2X	34.74	126.66	89.12	59.35	14.61						
	4 Wire Unbundled Digital Loop 4.8 Kbps -Zone 1		1	UDL	UDL4X	29.93	126.66	89.12	59.35	14.61						
	4 Wire Unbundled Digital Loop 4.8 Kbps - Zone 2		2	UDL	UDL4X	33.99	126.66	89.12	59.35	14.61						
	4 Wire Unbundled Digital Loop 4.8 Kbps - Zone 3		3	UDL	UDL4X	34.74	126.66	89.12	59.35	14.61						
	4 Wire Unbundled Digital Loop 9.6 Kbps - Zone 1		1	UDL	UDL9X	29.93	126.66	89.12	59.35	14.61						
	5 Wire Unbundled Digital Loop 9.6 Kbps - Zone 2		2	UDL	UDL9X	33.99	126.66	89.12	59.35	14.61						
	6 Wire Unbundled Digital Loop 9.6 Kbps - Zone 3		3	UDL	UDL9X	34.74	126.66	89.12	59.35	14.61						
	4 Wire Unbundled Digital 19.2 Kbps - Zone 1		1	UDL	UDL19	29.93	126.66	89.12	59.35	14.61						
	4 Wire Unbundled Digital 19.2 Kbps - Zone 2		2	UDL	UDL19	33.99	126.66	89.12	59.35	14.61						
	4 Wire Unbundled Digital 19.2 Kbps - Zone 3		3	UDL	UDL19	34.74	126.66	89.12	59.35	14.61						
	4 Wire Unbundled Digital Loop 56 Kbps - Zone 1		1	UDL	UDL56	29.93	126.66	89.12	59.35	14.61						
	4 Wire Unbundled Digital Loop 56 Kbps - Zone 2		2	UDL	UDL56	33.99	126.66	89.12	59.35	14.61						
	4 Wire Unbundled Digital Loop 56 Kbps - Zone 3		3	UDL	UDL56	34.74	126.66	89.12	59.35	14.61						
	4 Wire Unbundled Digital Loop 64 Kbps - Zone 1		1	UDL	UDL64	29.93	126.66	89.12	59.35	14.61						
	4 Wire Unbundled Digital Loop 64 Kbps - Zone 2		2	UDL	UDL64	33.99	126.66	89.12	59.35	14.61						
	4 Wire Unbundled Digital Loop 64 Kbps - Zone 3		3	UDL	UDL64	34.74	126.66	89.12	59.35	14.61						
	Switch-As-Is Conversion rate per UNE Loop, Single LSR, (per DS0)			UDL	URESL		24.88	3.51								
	Unbundled Loop Service Rearrangement, change in loop facility, per circuit			UDL	UREWO		102.34	49.85								
2-WIRE Unbundled COPPER LOOP																

UNBUNDLED NETWORK ELEMENTS - South Carolina														Att: 2 Exh: A			
CATEGORY		RATE ELEMENTS	Interim	Zone	BCS	USOC	RATES($)					Svc Order Submitted Elec per LSR	Svc Order Submitted Manually per LSR	Incremental Charge - Manual Svc Order vs. Electronic-1st	Incremental Charge - Manual Svc Order vs. Electronic-Add'l	Incremental Charge - Manual Svc Order vs. Electronic-Disc 1st	Incremental Charge - Manual Svc Order vs. Electronic-Disc Add'l
							Rec	Nonrecurring		Nonrecurring Disconnect		OSS Rates($)					
								First	Add'l	First	Add'l	SOMEC	SOMAN	SOMAN	SOMAN	SOMAN	SOMAN
		2-Wire Unbundled Copper Loop-Designed including manual service inquiry & facility reservation - Zone 1		1	UCL	UCLPB	12.19	119.91	69.62	50.37	7.93						
		2-Wire Unbundled Copper Loop-Designed including manual service inquiry & facility reservation - Zone 2		2	UCL	UCLPB	13.71	119.91	69.62	50.37	7.93						
		2 Wire Unbundled Copper Loop-Designed including manual service inquiry & facility reservation - Zone 3		3	UCL	UCLPB	14.14	119.91	69.62	50.37	7.93						
		2-Wire Unbundled Copper Loop-Designed without manual service inquiry and facility reservation - Zone 1		1	UCL	UCLPW	12.19	94.87	56.89	50.37	7.93						
		2-Wire Unbundled Copper Loop-Designed without manual service inquiry and facility reservation - Zone 2		2	UCL	UCLPW	13.71	94.87	56.89	50.37	7.93						
		2-Wire Unbundled Copper Loop-Designed without manual service inquiry and facility reservation - Zone 3		3	UCL	UCLPW	14.14	94.87	56.89	50.37	7.93						
		Order Coordination for Unbundled Copper Loops (per loop)			UCL	UCLMC		8.17	8.17								
		Unbundled Loop Service Rearrangement, change in loop facility, per circuit			UCL	UREWO		94.87	42.57								
	4-WIRE COPPER LOOP																
		4-Wire Copper Loop-Designed including manual service inquiry and facility reservation - Zone 1		1	UCL	UCL4S	19.64	144.17	93.88	55.12	10.38						
		4-Wire Copper Loop-Designed including manual service inquiry and facility reservation - Zone 2		2	UCL	UCL4S	20.90	144.17	93.88	55.12	10.38						
		4-Wire Copper Loop-Designed including manual service inquiry and facility reservation - Zone 3		3	UCL	UCL4S	19.34	144.17	93.88	55.12	10.38						
		4-Wire Copper Loop-Designed without manual service inquiry and facility reservation - Zone 1		1	UCL	UCL4W	19.64	119.13	81.15	55.12	10.38						
		4-Wire Copper Loop-Designed without manual service inquiry and facility reservation - Zone 2		2	UCL	UCL4W	20.90	119.13	81.15	55.12	10.38						
		4-Wire Copper Loop-Designed without manual service inquiry and facility reservation - Zone 3		3	UCL	UCL4W	19.34	119.13	81.15	55.12	10.38						
		Order Coordination for Unbundled Copper Loops (per loop)			UCL	UCLMC		8.17	8.17								
		Unbundled Loop Service Rearrangement, change in loop facility, per circuit			UCL	UREWO		94.87	42.57								
		Order Coordination for Specified Conversion Time (per LSR)			UEA, UDN, UAL, UHL, UDL, USL	OCOSL		18.13									
	Rearrangements																
		EEL to UNE-L Retermination, per 2 Wire Unbundled Voice Loop-SL2			UEA	UREEL		87.90	36.44								
		EEL to UNE-L Retermination, per 4 Wire Unbundled Voice Loop			UEA	UREEL		87.90	36.44								
		EEL to UNE-L Retermination, per 2 Wire ISDN Loop			UDN	UREEL		91.82	44.25								
		EEL to UNE-L Retermination, per 4 Wire Unbundled Digital Loop			UDL	UREEL		102.34	49.85								
		EEL to UNE-L Retermination, per 4 Wire Unbundled DS1 Loop			USL	UREEL		101.30	43.13								
UNE LOOP COMMINGLING																	
	2-WIRE ANALOG VOICE GRADE LOOP - COMMINGLING																
		2-Wire Analog Voice Grade Loop - Service Level 2 w/Loop or Ground Start Signaling - Zone 1		1	NTCVG	UEAL2	16.68	105.98	68.43	53.05	10.61						
		2-Wire Analog Voice Grade Loop - Service Level 2 w/Loop or Ground Start Signaling - Zone 2		2	NTCVG	UEAL2	23.13	105.98	68.43	53.05	10.61						
		2-Wire Analog Voice Grade Loop - Service Level 2 w/Loop or Ground Start Signaling - Zone 3		3	NTCVG	UEAL2	28.46	105.98	68.43	53.05	10.61						
		2-Wire Analog Voice Grade Loop - Service Level 2 w/Reverse Battery Signaling - Zone 1		1	NTCVG	UEAR2	16.68	105.98	68.43	53.05	10.61						
		2-Wire Analog Voice Grade Loop - Service Level 2 w/Reverse Battery Signaling - Zone 2		2	NTCVG	UEAR2	23.13	105.98	68.43	53.05	10.61						
		2-Wire Analog Voice Grade Loop - Service Level 2 w/Reverse Battery Signaling - Zone 3		3	NTCVG	UEAR2	28.46	105.98	68.43	53.05	10.61						
		Switch-As-Is Conversion rate per UNE Loop, Single LSR, (per DS0)			NTCVG	URESL		24.88	3.51								
		Unbundled Loop Service Rearrangement, change in loop facility, per circuit			NTCVG	UREWO		87.90	36.44								
		Loop Tagging - Service Level 2 (SL2)			NTCVG	URETL		11.24	1.10								
	4-WIRE ANALOG VOICE GRADE LOOP																
		4-Wire Analog Voice Grade Loop - Zone 1		1	NTCVG	UEAL4	32.59	132.38	94.83	59.35	14.61						
		4-Wire Analog Voice Grade Loop - Zone 2		2	NTCVG	UEAL4	43.89	132.38	94.83	59.35	14.61						

UNBUNDLED NETWORK ELEMENTS - South Carolina — Att: 2 Exh: A

CATEGORY	RATE ELEMENTS	Interim	Zone	BCS	USOC	RATES($) Rec	Nonrecurring First	Nonrecurring Add'l	Nonrecurring Disconnect First	Nonrecurring Disconnect Add'l	Svc Order Submitted Elec per LSR	Svc Order Submitted Manually per LSR	Incremental Charge - Manual Svc Order vs. Electronic-1st	Incremental Charge - Manual Svc Order vs. Electronic-Add'l	Incremental Charge - Manual Svc Order vs. Electronic-Disc 1st	Incremental Charge - Manual Svc Order vs. Electronic-Disc Add'l
											OSS Rates($)					
							First	Add'l	First	Add'l	SOMEC	SOMAN	SOMAN	SOMAN	SOMAN	SOMAN
	4-Wire Analog Voice Grade Loop - Zone 3		3	NTCVG	UEAL4	43.38	132.38	94.83	59.35	14.61						
	Switch-As-Is Conversion rate per UNE Loop, Single LSR, (per DS0)			NTCVG	URESL		24.88	3.51								
	Unbundled Loop Service Rearrangement, change in loop facility, per circuit			NTCVG	UREWO		87.90	36.44								
4-WIRE DS1 DIGITAL LOOP - COMMINGLING																
	4-Wire DS1 Digital Loop - Zone 1		1	NTCD1	USLXX	79.51	253.03	157.89	44.80	11.73						
	4-Wire DS1 Digital Loop - Zone 2		2	NTCD1	USLXX	136.00	253.03	157.89	44.80	11.73						
	4-Wire DS1 Digital Loop - Zone 3		3	NTCD1	USLXX	229.15	253.03	157.89	44.80	11.73						
	Switch-As-Is Conversion rate per UNE Loop, Single LSR, (per DS1)			NTCD1	URESL		24.88	3.51								
	Unbundled Loop Service Rearrangement, change in loop facility, per circuit			NTCD1	UREWO		101.30	43.13								
4-WIRE 19.2, 56 OR 64 KBPS DIGITAL GRADE LOOP																
	4 Wire Unbundled Digital Loop 2.4 Kbps - Zone 1		1	NTCUD	UDL2X	29.93	126.66	89.12	59.35	14.61						
	4 Wire Unbundled Digital Loop 2.4 Kbps - Zone 2		2	NTCUD	UDL2X	33.99	126.66	89.12	59.35	14.61						
	4 Wire Unbundled Digital Loop 2.4 Kbps - Zone3		3	NTCUD	UDL2X	34.74	126.66	89.12	59.35	14.61						
	4 Wire Unbundled Digital Loop 4.8 Kbps -Zone 1		1	NTCUD	UDL4X	29.93	126.66	89.12	59.35	14.61						
	4 Wire Unbundled Digital Loop 4.8 Kbps - Zone 2		2	NTCUD	UDL4X	33.99	126.66	89.12	59.35	14.61						
	4 Wire Unbundled Digital Loop 4.8 Kbps - Zone 3		3	NTCUD	UDL4X	34.74	126.66	89.12	59.35	14.61						
	4 Wire Unbundled Digital Loop 9.6 Kbps - Zone 1		1	NTCUD	UDL9X	29.93	126.66	89.12	59.35	14.61						
	5 Wire Unbundled Digital Loop 9.6 Kbps - Zone 2		2	NTCUD	UDL9X	33.99	126.66	89.12	59.35	14.61						
	6 Wire Unbundled Digital Loop 9.6 Kbps - Zone 3		3	NTCUD	UDL9X	34.74	126.66	89.12	59.35	14.61						
	4 Wire Unbundled Digital 19.2 Kbps - Zone 1		1	NTCUD	UDL19	29.93	126.66	89.12	59.35	14.61						
	4 Wire Unbundled Digital 19.2 Kbps - Zone 2		2	NTCUD	UDL19	33.99	126.66	89.12	59.35	14.61						
	4 Wire Unbundled Digital 19.2 Kbps - Zone 3		3	NTCUD	UDL19	34.74	126.66	89.12	59.35	14.61						
	4 Wire Unbundled Digital Loop 56 Kbps - Zone 1		1	NTCUD	UDL56	29.93	126.66	89.12	59.35	14.61						
	4 Wire Unbundled Digital Loop 56 Kbps - Zone 2		2	NTCUD	UDL56	33.99	126.66	89.12	59.35	14.61						
	4 Wire Unbundled Digital Loop 56 Kbps - Zone 3		3	NTCUD	UDL56	34.74	126.66	89.12	59.35	14.61						
	4 Wire Unbundled Digital Loop 64 Kbps - Zone 1		1	NTCUD	UDL64	29.93	126.66	89.12	59.35	14.61						
	4 Wire Unbundled Digital Loop 64 Kbps - Zone 2		2	NTCUD	UDL64	33.99	126.66	89.12	59.35	14.61						
	4 Wire Unbundled Digital Loop 64 Kbps - Zone 3		3	NTCUD	UDL64	34.74	126.66	89.12	59.35	14.61						
	Switch-As-Is Conversion rate per UNE Loop, Single LSR, (per DS0)			NTCUD	URESL		24.88	3.51								
	Unbundled Loop Service Rearrangement, change in loop facility, per circuit			NTCUD	UREWO		102.34	49.85								
	Order Coordination for Specified Conversion Time (per LSR)			NTCVG, NTCUD, NTCD1	OCOSL		18.13									
MAINTENANCE OF SERVICE																
	Maintenance of Service Charge, Basic Time, per half hour			UDC, UEA, UDL, UDN, USL, UAL, UHL, UCL, NTCVG, NTCUD, NTCD1, U1TD1, U1TD3, U1TDX, U1TS1, U1TVX, UDF, UDFCX, UDLSX, UE3, ULDD1, ULDD3, ULDDX, ULDS1, ULDVX, UNC1X, UNC3X, UNCDX, UNCSX, UNCVX, ULS	MVVBT		80.00	55.00								

UNBUNDLED NETWORK ELEMENTS - South Carolina														Att: 2 Exh: A			
CATEGORY		RATE ELEMENTS	Interim	Zone	BCS	USOC	RATES($)					Svc Order Submitted Elec per LSR	Svc Order Submitted Manually per LSR	Incremental Charge - Manual Svc Order vs. Electronic-1st	Incremental Charge - Manual Svc Order vs. Electronic-Add'l	Incremental Charge - Manual Svc Order vs. Electronic-Disc 1st	Incremental Charge - Manual Svc Order vs. Electronic-Disc Add'l
							Rec	Nonrecurring		Nonrecurring Disconnect		OSS Rates($)					
								First	Add'l	First	Add'l	SOMEC	SOMAN	SOMAN	SOMAN	SOMAN	SOMAN
		Maintenance of Service Charge, Overtime, per half hour			UDC, UEA, UDL, UDN, USL, UAL, UHL, UCL, NTCVG, NTCUD, NTCD1, U1TD1, U1TD3, U1TDX, U1TS1, U1TVX, UDF, UDFCX, UDLSX, UE3, ULDD1, ULDD3, ULDDX, ULDS1, ULDVX, UNC1X, UNC3X, UNCDX, UNCSX, UNCVX, ULS	MVVOT		90.00	65.00								
		Maintenance of Service Charge, Premium, per half hour			UDC, UEA, UDL, UDN, USL, UAL, UHL, UCL, NTCVG, NTCUD, NTCD1, U1TD1, U1TD3, U1TDX, U1TS1, U1TVX, UDF, UDFCX, UDLSX, UE3, ULDD1, ULDD3, ULDDX, ULDS1, ULDVX, UNC1X, UNC3X, UNCDX, UNCSX, UNCVX, ULS	MVVPT		100.00	75.00								
LOOP MODIFICATION																	
		Unbundled Loop Modification, Removal of Load Coils - 2 Wire pair less than or equal to 18k ft, per Unbundled Loop			UAL, UHL, UCL, UEQ, ULS, UEA, UEANL, UEPSR, UEPSB	ULM2L		32.46	32.46								
		Unbundled Loop Modification Removal of Load Coils - 4 Wire less than or equal to 18K ft, per Unbundled Loop			UHL, UCL, UEA	ULM4L		32.46	32.46								
		Unbundled Loop Modification Removal of Bridged Tap Removal, per unbundled loop			UAL, UHL, UCL, UEQ, ULS, UEA, UEANL, UEPSR, UEPSB	ULMBT		32.48	32.48								
SUB-LOOPS																	
	Sub-Loop Distribution																
		Sub-Loop - Per Cross Box Location - CLEC Feeder Facility Set-Up			UEANL, UEF	USBSA		241.42	241.42								
		Sub-Loop - Per Cross Box Location - Per 25 Pair Panel Set-Up			UEANL, UEF	USBSB		22.69	22.69								
		Sub-Loop - Per Building Equipment Room - CLEC Feeder Facility Set-Up			UEANL	USBSC		177.84	177.84								
		Sub-Loop - Per Building Equipment Room - Per 25 Pair Panel Set-Up			UEANL	USBSD		55.58	55.58								
		Sub-Loop Distribution Per 2-Wire Analog Voice Grade Loop - Zone 1		1	UEANL	USBN2	8.87	65.94	31.03	45.35	6.71						
		Sub-Loop Distribution Per 2-Wire Analog Voice Grade Loop - Zone 2		2	UEANL	USBN2	12.58	65.94	31.03	45.35	6.71						
		Sub-Loop Distribution Per 2-Wire Analog Voice Grade Loop - Zone 3		3	UEANL	USBN2	14.79	65.94	31.03	45.35	6.71						
		Order Coordination for Unbundled Sub-Loops, per sub-loop pair			UEANL	USBMC		8.17	8.17								
		Sub-Loop Distribution Per 4-Wire Analog Voice Grade Loop - Zone 1		1	UEANL	USBN4	14.11	79.21	44.29	49.82	9.09						
		Sub-Loop Distribution Per 4-Wire Analog Voice Grade Loop - Zone 2		2	UEANL	USBN4	19.40	79.21	44.29	49.82	9.09						
		Sub-Loop Distribution Per 4-Wire Analog Voice Grade Loop - Zone 3		3	UEANL	USBN4	18.90	79.21	44.29	49.82	9.09						

UNBUNDLED NETWORK ELEMENTS - South Carolina														Att: 2 Exh: A			
CATEGORY		RATE ELEMENTS	Interim	Zone	BCS	USOC	RATES($)					Svc Order Submitted Elec per LSR	Svc Order Submitted Manually per LSR	Incremental Charge - Manual Svc Order vs. Electronic-1st	Incremental Charge - Manual Svc Order vs. Electronic-Add'l	Incremental Charge - Manual Svc Order vs. Electronic-Disc 1st	Incremental Charge - Manual Svc Order vs. Electronic-Disc Add'l
							Rec	Nonrecurring		Nonrecurring Disconnect		OSS Rates($)					
								First	Add'l	First	Add'l	SOMEC	SOMAN	SOMAN	SOMAN	SOMAN	SOMAN
		Order Coordination for Unbundled Sub-Loops, per sub-loop pair			UEANL	USBMC		8.17	8.17								
		Sub-Loop 2-Wire Intrabuilding Network Cable (INC)			UEANL	USBR2	2.41	53.13	18.21	45.35	6.71						
		Order Coordination for Unbundled Sub-Loops, per sub-loop pair			UEANL	USBMC		8.17	8.17								
		Sub-Loop 4-Wire Intrabuilding Network Cable (INC)			UEANL	USBR4	5.36	59.38	24.47	49.82	9.09						
		Order Coordination for Unbundled Sub-Loops, per sub-loop pair			UEANL	USBMC		8.17	8.17								
		Loop Testing - Basic 1st Half Hour			UEANL	URET1		34.23	0.00								
		Loop Testing - Basic Additional Half Hour			UEANL	URETA		19.90	19.90								
		2 Wire Copper Unbundled Sub-Loop Distribution - Zone 1		1	UEF	UCS2X	7.11	65.94	31.03	45.35	6.71						
		2 Wire Copper Unbundled Sub-Loop Distribution - Zone 2		2	UEF	UCS2X	9.83	65.94	31.03	45.35	6.71						
		2 Wire Copper Unbundled Sub-Loop Distribution - Zone 3		3	UEF	UCS2X	10.48	65.94	31.03	45.35	6.71						
		Order Coordination for Unbundled Sub-Loops, per sub-loop pair			UEF	USBMC		8.17	8.17								
		4 Wire Copper Unbundled Sub-Loop Distribution - Zone 1		1	UEF	UCS4X	7.85	79.21	44.29	49.82	9.09						
		4 Wire Copper Unbundled Sub-Loop Distribution - Zone 2		2	UEF	UCS4X	14.17	79.21	44.29	49.82	9.09						
		4 Wire Copper Unbundled Sub-Loop Distribution - Zone 3		3	UEF	UCS4X	12.64	79.21	44.29	49.82	9.09						
		Order Coordination for Unbundled Sub-Loops, per sub-loop pair			UEF	USBMC		8.17	8.17								
		Loop Tagging Service Level 1, Unbundled Copper Loop, Non-Designed and Distribution Subloops			UEF, UEANL	URETL		8.95	0.88								
		Loop Testing - Basic 1st Half Hour			UEF	URET1		34.23	0.00								
		Loop Testing - Basic Additional Half Hour			UEF	URETA		19.90	19.90								
	Unbundled Sub-Loop Modification																
		Unbundled Sub-Loop Modification - 2-W Copper Dist Load Coil/Equip Removal per 2-W PR			UEF	ULM2X		176.17	5.11								
		Unbundled Sub-loop Modification - 4-W Copper Dist Load Coil/Equip Removal per 4-W PR			UEF	ULM4X		176.17	5.11								
		Unbundled Loop Modification, Removal of Bridge Tap, per unbundled loop			UEF	ULMBT		278.82	6.13								
	Unbundled Network Terminating Wire (UNTW)																
		Unbundled Network Terminating Wire (UNTW) per Pair			UENTW	UENPP	0.3303	30.20	30.20								
	Network Interface Device (NID)																
		Network Interface Device (NID) - 1-2 lines			UENTW	UND12		43.68	28.79								
		Network Interface Device (NID) - 1-6 lines			UENTW	UND16		64.42	49.53								
		Network Interface Device Cross Connect - 2 W			UENTW	UNDC2		5.92	5.92								
		Network Interface Device Cross Connect - 4W			UENTW	UNDC4		5.92	5.92								
UNE OTHER, PROVISIONING ONLY - NO RATE																	
		Unbundled Contact Name, Provisioning Only - no rate			UAL, UCL, UDC, UDL, UDN, UEA, UHL, UEANL, UEF, UEQ, UENTW, NTCVG, NTCUD, NTCD1, USL	UNECN	0.00	0.00									
		Unbundled DS1 Loop - Superframe Format Option - no rate			USL, NTCD1	CCOSF		0.00									
		Unbundled DS1 Loop - Expanded Superframe Format option - no rate			USL, NTCD1	CCOEF		0.00									
		NID - Dispatch and Service Order for NID installation			UENTW	UNDBX	0.00	0.00									
		UNTW Circuit Establishment, Provisioning Only - No Rate			UENTW	UENCE	0.00	0.00									
LOOP MAKE-UP																	
		Loop Makeup - Preordering Without Reservation, per working or spare facility queried (Manual).			UMK	UMKLW		24.04	24.04								
		Loop Makeup - Preordering With Reservation, per spare facility queried (Manual).			UMK	UMKLP		25.49	25.49								
		Loop Makeup--With or Without Reservation, per working or spare facility queried (Mechanized)			UMK	UMKMQ		0.34	0.34								
LINE SPLITTING																	
	END USER ORDERING-CENTRAL OFFICE BASED																
		Line Splitting - per line activation DLEC owned splitter			UEPSR UEPSB	UREOS	0.61										
		Line Splitting - per line activation BST owned - physical			UEPSR UEPSB	UREBP	0.61	37.09	21.24	20.07	9.85						
		Line Splitting - per line activation BST owned - virtual			UEPSR UEPSB	UREBV	0.61	37.09	21.24	20.07	9.85						
	END USER ORDERING - REMOTE SITE LINE SPLITTING																
	UNBUNDLED EXCHANGE ACCESS LOOP																

UNBUNDLED NETWORK ELEMENTS - South Carolina														Att: 2 Exh: A			
CATEGORY		RATE ELEMENTS	Interim	Zone	BCS	USOC	RATES($)					Svc Order Submitted Elec per LSR	Svc Order Submitted Manually per LSR	Incremental Charge - Manual Svc Order vs. Electronic-1st	Incremental Charge - Manual Svc Order vs. Electronic-Add'l	Incremental Charge - Manual Svc Order vs. Electronic-Disc 1st	Incremental Charge - Manual Svc Order vs. Electronic-Disc Add'l
							Rec	Nonrecurring		Nonrecurring Disconnect		OSS Rates($)					
								First	Add'l	First	Add'l	SOMEC	SOMAN	SOMAN	SOMAN	SOMAN	SOMAN
	2-WIRE ANALOG VOICE GRADE LOOP																
		2 Wire Analog Voice Grade Loop-Service Level 1-Line Splitting-Zone 1		1	UEPSR UEPSB	UEALS	14.94	37.92	17.62	23.56	5.32						
		2 Wire Analog Voice Grade Loop-Service Level 1-Line Splitting-Zone 1		1	UEPSR UEPSB	UEABS	14.94	37.92	17.62	23.56	5.32						
		2 Wire Analog Voice Grade Loop- Service Level 1-Line Splitting-Zone 2		2	UEPSR UEPSB	UEALS	21.39	37.92	17.62	23.56	5.32						
		2 Wire Analog Voice Grade Loop- Service Level 1-Line Splitting-Zone 2		2	UEPSR UEPSB	UEABS	21.39	37.92	17.62	23.56	5.32						
		2 Wire Analog Voice Grade Loop-Service Level 1-Line Splitting-Zone 3		3	UEPSR UEPSB	UEALS	26.72	37.92	17.62	23.56	5.32						
		2 Wire Analog Voice Grade Loop-Service Level 1-Line Splitting-Zone 3		3	UEPSR UEPSB	UEABS	26.72	37.92	17.62	23.56	5.32						
	PHYSICAL COLLOCATION																
		Physical Collocation-2 Wire Cross Connects (Loop) for Line Splitting			UEPSR UEPSB	PE1LS	0.0341	12.32	11.83	6.04	5.45						
	VIRTUAL COLLOCATION																
		Virtual Collocation-2 Wire Cross Connects (Loop) for Line Splitting			UEPSR UEPSB	VE1LS	0.0317	12.32	11.83	6.04	5.45						
UNBUNDLED DEDICATED TRANSPORT																	
	INTEROFFICE CHANNEL - DEDICATED TRANSPORT																
		Interoffice Channel - 2-Wire Voice Grade - per mile			U1TVX	1L5XX	0.0167										
		Interoffice Channel - 2-Wire Voice Grade - Facility Termination			U1TVX	U1TV2	24.30	40.63	27.47	16.77	6.91						
		Interoffice Channel - 2-Wire Voice Grade Rev Bat. - per mile			U1TVX	1L5XX	0.0167										
		Interoffice Channel - 2-Wire VG Rev Bat. - Facility Termination			U1TVX	U1TR2	24.30	40.63	27.47	16.77	6.91						
		Interoffice Channel - 4-Wire Voice Grade - per mile			U1TVX	1L5XX	0.0167										
		Interoffice Channel - 4- Wire Voice Grade - Facility Termination			U1TVX	U1TV4	21.29	40.63	27.47	16.77	6.91						
		Interoffice Channel - 56 kbps - per mile			U1TDX	1L5XX	0.0167										
		Interoffice Channel - 56 kbps - Facility Termination			U1TDX	U1TD5	16.76	40.63	27.47	16.77	6.91						
		Interoffice Channel - 64 kbps - per mile			U1TDX	1L5XX	0.0167										
		Interoffice Channel - 64 kbps - Facility Termination			U1TDX	U1TD6	16.76	40.63	27.47	16.77	6.91						
		Interoffice Channel - DS1 - per mile			U1TD1	1L5XX	0.3415										
		Interoffice Channel - DS1 - Facility Termination			U1TD1	U1TF1	77.14	89.47	81.99	16.39	14.48						
		Interoffice Channel - DS3 - per mile			U1TD3	1L5XX	8.02										
		Interoffice Channel - DS3 - Facility Termination			U1TD3	U1TF3	880.65	279.37	163.12	60.33	58.59						
		Interoffice Channel - STS-1 - per mile			U1TS1	1L5XX	8.02										
		Interoffice Channel - STS-1 - Facility Termination			U1TS1	U1TFS	880.55	279.37	163.12	60.33	58.59						
	UNBUNDLED DARK FIBER																
		Dark Fiber - Interoffice Transport, Per Four Fiber Strands, Per Route Mile Or Fraction Thereof			UDF, UDFCX	1L5DF	36.41										
		Dark Fiber - Interoffice Transport, Per Four Fiber Strands, Per Route Mile Or Fraction Thereof			UDF, UDFCX	UDF14		640.51	138.17	317.76	198.11						
HIGH CAPACITY UNBUNDLED LOCAL LOOP																	
	DS-3/STS-1 UNBUNDLED LOCAL LOOP - Stand Alone																
		DS3 Unbundled Local Loop - per mile			UE3	1L5ND	12.26										
		DS3 Unbundled Local Loop - Facility Termination			UE3	UE3PX	306.36	452.52	264.53	119.75	83.77						
		STS-1Unbundled Local Loop - per mile			UDLSX	1L5ND	12.26										
		STS-1 Unbundled Local Loop - Facility Termination			UDLSX	UDLS1	313.49	452.52	264.53	119.75	83.77						
ENHANCED EXTENDED LINK (EELs)																	
	Network Elements Used in Combinations																
		2-Wire VG Loop (SL2) in Combination - Zone 1		1	UNCVX	UEAL2	16.68	105.98	68.43	53.05	10.61						
		2-Wire VG Loop (SL2) in Combination - Zone 2		2	UNCVX	UEAL2	23.13	105.98	68.43	53.05	10.61						
		2-Wire VG Loop (SL2) in Combination - Zone 3		3	UNCVX	UEAL2	28.46	105.98	68.43	53.05	10.61						
		4-Wire Analog Voice Grade Loop in Combination - Zone 1		1	UNCVX	UEAL4	32.59	132.38	94.83	59.35	14.61						
		4-Wire Analog Voice Grade Loop in Combination - Zone 2		2	UNCVX	UEAL4	43.89	132.38	94.83	59.35	14.61						
		4-Wire Analog Voice Grade Loop in Combination - Zone 3		3	UNCVX	UEAL4	43.38	132.38	94.83	59.35	14.61						
		2-Wire ISDN Loop in Combination - Zone 1		1	UNCNX	U1L2X	25.21	117.58	80.03	53.05	10.61						
		2-Wire ISDN Loop in Combination - Zone 2		2	UNCNX	U1L2X	32.76	117.58	80.03	53.05	10.61						
		2-Wire ISDN Loop in Combination - Zone 3		3	UNCNX	U1L2X	37.70	117.58	80.03	53.05	10.61						
		4-Wire 56Kbps Digital Grade Loop in Combination - Zone 1		1	UNCDX	UDL56	29.93	126.66	89.12	59.35	14.61						
		4-Wire 56Kbps Digital Grade Loop in Combination - Zone 2		2	UNCDX	UDL56	33.99	126.66	89.12	59.35	14.61						
		4-Wire 56Kbps Digital Grade Loop in Combination - Zone 3		3	UNCDX	UDL56	34.74	126.66	89.12	59.35	14.61						

UNBUNDLED NETWORK ELEMENTS - South Carolina

Att: 2 Exh: A

CATEGORY	RATE ELEMENTS	Interim	Zone	BCS	USOC	RATES($)					Svc Order Submitted Elec per LSR	Svc Order Submitted Manually per LSR	Incremental Charge - Manual Svc Order vs. Electronic-1st	Incremental Charge - Manual Svc Order vs. Electronic-Add'l	Incremental Charge - Manual Svc Order vs. Electronic-Disc 1st	Incremental Charge - Manual Svc Order vs. Electronic-Disc Add'l
						Rec	Nonrecurring		Nonrecurring Disconnect		OSS Rates($)					
							First	Add'l	First	Add'l	SOMEC	SOMAN	SOMAN	SOMAN	SOMAN	SOMAN
	4-Wire 64Kbps Digital Grade Loop in Combination - Zone 1		1	UNCDX	UDL64	29.93	126.66	89.12	59.35	14.61						
	4-Wire 64Kbps Digital Grade Loop in Combination - Zone 2		2	UNCDX	UDL64	33.99	126.66	89.12	59.35	14.61						
	4-Wire 64Kbps Digital Grade Loop in Combination - Zone 3		3	UNCDX	UDL64	34.74	126.66	89.12	59.35	14.61						
	4-Wire DS1 Digital Loop in Combination - Zone 1		1	UNC1X	USLXX	79.51	253.03	157.89	44.80	11.73						
	4-Wire DS1 Digital Loop in Combination - Zone 2		2	UNC1X	USLXX	136.00	253.03	157.89	44.80	11.73						
	4-Wire DS1 Digital Loop in Combination - Zone 3		3	UNC1X	USLXX	229.15	253.03	157.89	44.80	11.73						
	DS3 Local Loop in combination - per mile			UNC3X	1L5ND	12.26										
	DS3 Local Loop in combination - Facility Termination			UNC3X	UE3PX	306.36	452.52	264.53	119.75	83.77						
	STS-1 Local Loop in combination - per mile			UNCSX	1L5ND	12.26										
	STS-1 Local Loop in combination - Facility Termination			UNCSX	UDLS1	313.49	452.52	264.53	119.75	83.77						
	Interoffice Channel in combination - 2-wire VG - per mile			UNCVX	1L5XX	0.0167										
	Interoffice Channel in combination - 2-wire VG - Facility Termination			UNCVX	U1TV2	24.30	40.63	27.47	16.77	6.91						
	Interoffice Channel in combination - 4-wire VG - per mile			UNCVX	1L5XX	0.0167										
	Interoffice Channel in combination - 4-wire VG - Facility Termination			UNCVX	U1TV4	21.29	40.63	27.47	16.77	6.91						
	Interoffice Channel in combination - 4-wire 56 kbps - per mile			UNCDX	1L5XX	0.0167										
	Interoffice Channel in combination - 4-wire 56 kbps - Facility Termination			UNCDX	U1TD5	16.76	40.63	27.47	16.77	6.91						
	Interoffice Channel in combination - 4-wire 64 kbps - per mile			UNCDX	1L5XX	0.0167										
	Interoffice Channel in combination - 4-wire 64 kbps - Facility Termination			UNCDX	U1TD6	16.76	40.63	27.47	16.77	6.91						
	Interoffice Channel in combination - DS1 - per mile			UNC1X	1L5XX	0.3415										
	Interoffice Channel in combination - DS1 Facility Termination			UNC1X	U1TF1	77.14	89.47	81.99	16.39	14.48						
	Interoffice Channel in combination - DS3 - per mile			UNC3X	1L5XX	8.02										
	Interoffice Channel in combination - DS3 - Facility Termination			UNC3X	U1TF3	880.65	279.37	163.12	60.33	58.59						
	Interoffice Channel in combination - STS-1 - per mile			UNCSX	1L5XX	8.02										
	Interoffice Channel in combination - STS-1 Facility Termination			UNCSX	U1TFS	880.55	279.37	163.12	60.33	58.59						
ADDITIONAL NETWORK ELEMENTS																
	Optional Features & Functions:															
	Clear Channel Capability Extended Frame Option - per DS1	I		U1TD1, ULDD1,UNC1X	CCOEF		0.00									
	Clear Channel Capability Super FrameOption - per DS1	I		U1TD1, ULDD1,UNC1X	CCOSF		0.00									
	Clear Channel Capability (SF/ESF) Option - Subsequent Activity - per DS1	I		ULDD1, U1TD1, UNC1X, USL	NRCCC		185.26	23.86	1.99	0.78						
	C-bit Parity Option - Subsequent Activity - per DS3	i		U1TD3, ULDD3, UE3, UNC3X	NRCC3		219.58	7.69	0.737	0.00						
	DS1/DS0 Channel System			UNC1X	MQ1	107.57	91.24	62.71	10.56	9.81						
	DS3/DS1Channel System			UNC3X, UNCSX	MQ3	144.02	178.54	94.18	33.33	31.90						
	Voice Grade COCI in combination			UNCVX	1D1VG	0.56	6.59	4.73								
	Voice Grade COCI - for 2W-SL2 & 4W Voice Grade Local Loop			UEA	1D1VG	0.56	6.59	4.73								
	Voice Grade COCI - for connection to a channelized DS1 Local Channel in the same SWC as collocation			U1TUC	1D1VG	0.56	6.59	4.73								
	OCU-DP COCI (2.4-64kbs) in combination			UNCDX	1D1DD	1.19	6.59	4.73								
	OCU-DP COCI (2.4-64kbs) - for Unbundled Digital Loop			UDL	1D1DD	1.19	6.59	4.73								
	OCU-DP COCI (2.4-64kbs) - for connection to a channelized DS1 Local Channel in the same SWC as collocation			U1TUD	1D1DD	1.19	6.59	4.73								
	2-wire ISDN COCI (BRITE) in combination			UNCNX	UC1CA	2.56	6.59	4.73								
	2-wire ISDN COCI (BRITE) - for a Local Loop			UDN	UC1CA	2.56	6.59	4.73								
	2-wire ISDN COCI (BRITE) - for connection to a channelized DS1 Local Channel in the same SWC as collocation			U1TUB	UC1CA	2.56	6.59	4.73								
	DS1 COCI in combination			UNC1X	UC1D1	8.64	6.59	4.73								
	DS1 COCI - for Stand Alone Local Channel			ULDD1	UC1D1	8.64	6.59	4.73								
	DS1 COCI - for Stand Alone Interoffice Channel			U1TD1	UC1D1	8.64	6.59	4.73								
	DS1 COCI - for DS1 Local Loop			USL, NTCD1	UC1D1	8.64	6.59	4.73								
	DS1 COCI - for connection to a channelized DS1 Local Channel in the same SWC as collocation			U1TUA	UC1D1	8.64	6.59	4.73								

UNBUNDLED NETWORK ELEMENTS - South Carolina | Att: 2 Exh: A

CATEGORY	RATE ELEMENTS	Interim	Zone	BCS	USOC	RATES($) Rec	Nonrecurring First	Nonrecurring Add'l	Nonrecurring Disconnect First	Nonrecurring Disconnect Add'l	Svc Order Submitted Elec per LSR	Svc Order Submitted Manually per LSR	Incremental Charge - Manual Svc Order vs. Electronic- 1st	Incremental Charge - Manual Svc Order vs. Electronic- Add'l	Incremental Charge - Manual Svc Order vs. Electronic- Disc 1st	Incremental Charge - Manual Svc Order vs. Electronic- Disc Add'l
											OSS Rates($)					
							First	Add'l	First	Add'l	SOMEC	SOMAN	SOMAN	SOMAN	SOMAN	SOMAN
	Wholesale - UNE, Switch-As-Is Conversion Charge			UNCVX, UNCDX, UNC1X, UNC3X, UNCSX, UDFCX, XDH1X, HFQC6, XDD2X, XDV6X, XDDFX, XDD4X, HFRST, UNCNX	UNCCC		5.61	5.61								
	Unbundled Misc Rate Element, SNE SAI, Single Network Element - Switch As Is Non-recurring Charge, per circuit (LSR)			U1TVX, U1TDX, U1TD1, U1TD3, U1TS1, UDF, UE3	URESL		40.27	13.52								
Access to DCS - Customer Reconfiguration (FlexServ)																
	Customer Reconfiguration Establishment						1.48		1.85							
	DS1 DCS Termination with DS0 Switching					27.96	25.60	19.70	16.67	13.41						
	DS1 DCS Termination with DS1 Switching					12.67	18.51	12.61	12.24	8.98						
	DS3 DCS Termination with DS1 Switching					176.51	25.60	19.70	16.67	13.41						
Node (SynchroNet)																
	Node per month			UNCDX	UNCNT	14.55										
Service Rearrangements																
	NRC - Change in Facility Assignment per circuit Service Rearrangement	I		U1TVX, U1TDX, U1TUC, U1TUD, U1TUB, ULDVX, ULDDX, UNCVX, UNCDX, UNC1X	URETD		101.30	43.13								
	NRC - Change in Facility Assignment per circuit Project Management (added to CFA per circuit if project managed)	I		U1TVX, U1TDX, U1TUC, U1TUD, U1TUB, ULDVX, ULDDX, UNCVX, UNCDX, UNC1X	URETB		3.66	3.66								
	NRC - Order Coordination Specific Time - Dedicated Transport	I		UNC1X, UNC3X	OCOSR		18.90	18.90								
COMMINGLING																
	Commingling Authorization			UNCVX, UNCDX, UNC1X, UNC3X, UNCSX, U1TD1, U1TD3, U1TS1, UE3, UDLSX, U1TVX, U1TDX, U1TUB, ULDVX, ULDD1, ULDD3, ULDS1	CMGAU	0.00	0.00	0.00	0.00	0.00						
Commingled (UNE part of single bandwidth circuit)																
	Commingled VG COCI			XDV2X	1D1VG	0.56	6.59	4.73								
	Commingled Digital COCI			XDV6X	1D1DD	1.19	6.59	4.73								
	Commingled ISDN COCI			XDD4X	UC1CA	2.56	6.59	4.73								
	Commingled 2-wire VG Interoffice Channel Facility Termination			XDV2X	U1TV2	24.30	40.63	27.47	16.77	6.91						
	Commingled 4-wire VG Interoffice Channel Facility Termination			XDV6X	U1TV4	21.29	40.63	27.47	16.77	6.91						
	Commingled 56kbps Interoffice Channel Facility Termination			XDD4X	U1TD5	16.76	40.63	27.47	16.77	6.91						
	Commingled 64kbps Interoffice Channel Facility Termination			XDD4X	U1TD6	16.76	40.63	27.47	16.77	6.91						
	Commingled VG/DS0 Interoffice Channel per mile			XDV2X, XDV6X, XDD4X	1L5XX	0.0167										
	Commingled 2-wire Local Loop Zone 1		1	XDV2X	UEAL2	16.68	105.98	68.43	53.05	10.61						
	Commingled 2-wire Local Loop Zone 2		2	XDV2X	UEAL2	23.13	105.98	68.43	53.05	10.61						
	Commingled 2-wire Local Loop Zone 3		3	XDV2X	UEAL2	28.46	105.98	68.43	53.05	10.61						
	Commingled 4-wire Local Loop Zone 1		1	XDV6X	UEAL4	32.59	132.38	94.83	59.35	14.61						
	Commingled 4-wire Local Loop Zone 2		2	XDV6X	UEAL4	43.89	132.38	94.83	59.35	14.61						
	Commingled 4-wire Local Loop Zone 3		3	XDV6X	UEAL4	43.38	132.38	94.83	59.35	14.61						
	Commingled 56kbps Local Loop Zone 1		1	XDD4X	UDL56	29.93	126.66	89.12	59.35	14.61						
	Commingled 56kbps Local Loop Zone 2		2	XDD4X	UDL56	33.99	126.66	89.12	59.35	14.61						
	Commingled 56kbps Local Loop Zone 3		3	XDD4X	UDL56	34.74	126.66	89.12	59.35	14.61						
	Commingled 64kbps Local Loop Zone 1		1	XDD4X	UDL64	29.93	126.66	89.12	59.35	14.61						
	Commingled 64kbps Local Loop Zone 2		2	XDD4X	UDL64	33.99	126.66	89.12	59.35	14.61						
	Commingled 64kbps Local Loop Zone 3		3	XDD4X	UDL64	34.74	126.66	89.12	59.35	14.61						
	Commingled ISDN Local Loop Zone 1		1	XDD4X	U1L2X	25.21	117.58	80.03	53.05	10.61						
	Commingled ISDN Local Loop Zone 2		2	XDD4X	U1L2X	32.76	117.58	80.03	53.05	10.61						
	Commingled ISDN Local Loop Zone 3		3	XDD4X	U1L2X	37.70	117.58	80.03	53.05	10.61						

UNBUNDLED NETWORK ELEMENTS - South Carolina																	Att: 2 Exh: A
CATEGORY		RATE ELEMENTS	Interim	Zone	BCS	USOC	RATES($)					Svc Order Submitted Elec per LSR	Svc Order Submitted Manually per LSR	Incremental Charge - Manual Svc Order vs. Electronic-1st	Incremental Charge - Manual Svc Order vs. Electronic-Add'l	Incremental Charge - Manual Svc Order vs. Electronic-Disc 1st	Incremental Charge - Manual Svc Order vs. Electronic-Disc Add'l
							Rec	Nonrecurring		Nonrecurring Disconnect		OSS Rates($)					
								First	Add'l	First	Add'l	SOMEC	SOMAN	SOMAN	SOMAN	SOMAN	SOMAN
		Commingled DS1 COCI			XDH1X	UC1D1	8.64	6.59	4.73								
		Commingled DS1 Interoffice Channel Facility Termination			XDH1X	U1TF1	77.14	89.47	81.99	16.39	14.48						
		Commingled DS1 Interoffice Channel per mile			XDH1X	1L5XX	0.3415										
		Commingled DS1/DS0 Channel System			XDH1X	MQ1	107.57	91.24	62.71	10.56	9.81						
		Commingled DS1 Local Loop Zone 1		1	XDH1X	USLXX	79.51	253.03	157.89	44.80	11.73						
		Commingled DS1 Local Loop Zone 2		2	XDH1X	USLXX	136.00	253.03	157.89	44.80	11.73						
		Commingled DS1 Local Loop Zone 3		3	XDH1X	USLXX	229.15	253.03	157.89	44.80	11.73						
		Commingled DS3 Local Loop Facility Termination			HFQC6	UE3PX	306.36	452.52	264.53	119.75	83.77						
		Commingled DS3/STS-1 Local Loop per mile			HFQC6, HFRST	1L5ND	12.26										
		Commingled STS-1 Local Loop Facility Termination			HFRST	UDLS1	313.49	452.52	264.53	119.75	83.77						
		Commingled DS3/DS1 Channel System			HFQC6	MQ3	144.02	178.54	94.18	33.33	31.90						
		Commingled DS3 Interoffice Channel Facility Termination			HFQC6	U1TF3	880.65	279.37	163.12	60.33	58.59						
		Commingled DS3 Interoffice Channel per mile			HFQC6	1L5XX	8.02										
		Commingled STS-1Interoffice Channel Facility Termination			HFRST	U1TFS	880.55	279.37	163.12	60.33	58.59						
		Commingled STS-1Interoffice Channel per mile			HFRST	1L5XX	8.02										
		Commingled Dark Fiber - Interoffice Transport, Per Four Fiber Strands, Per Route Mile Or Fraction Thereof			HEQDL	1L5DF	36.41										
		Commingled Dark Fiber - Interoffice Transport, Per Four Fiber Strands, Per Route Mile Or Fraction Thereof			HEQDL	UDF14		640.51	138.17	317.76	198.11						
		UNE to Commingled Conversion Tracking			XDH1X, HFQC6	CMGUN	0.00	0.00	0.00	0.00	0.00						
		SPA to Commingled Conversion Tracking			XDH1X, HFQC6	CMGSP	0.00	0.00	0.00	0.00	0.00						
LNP Query Service																	
		LNP Charge Per query					0.0008837										
		LNP Service Establishment Manual						25.09	25.09	23.07	23.07						
		LNP Service Provisioning with Point Code Establishment						594.82	303.88	269.53	198.18						
911 PBX LOCATE																	
	911 PBX LOCATE DATABASE CAPABILITY																
		Service Establishment per CLEC per End User Account			9PBDC	9PBEU		1,813.00									
		Changes to TN Range or Customer Profile			9PBDC	9PBTN		181.40									
		Per Telephone Number (Monthly)			9PBDC	9PBMM	0.07										
		Change Company (Service Provider) ID			9PBDC	9PBPC		532.48									
		PBX Locate Service Support per CLEC (Monthlt)			9PBDC	9PBMR	181.29										
		Service Order Charge			9PBDC	9PBSC		15.69									
	911 PBX LOCATE TRANSPORT COMPONENT																
	See Att 3																
	Note: Rates displaying an "I" in Interim column are interim as a result of a Commission order.																

UNBUNDLED NETWORK ELEMENTS - Tennessee																	Att: 2 Exh: A
CATEGORY		RATE ELEMENTS	Interim	Zone	BCS	USOC	RATES($)					Svc Order Submitted Elec per LSR	Svc Order Submitted Manually per LSR	Incremental Charge - Manual Svc Order vs. Electronic-1st	Incremental Charge - Manual Svc Order vs. Electronic-Add'l	Incremental Charge - Manual Svc Order vs. Electronic-Disc 1st	Incremental Charge - Manual Svc Order vs. Electronic-Disc Add'l
							Rec	Nonrecurring		Nonrecurring Disconnect		OSS Rates($)					
								First	Add'l	First	Add'l	SOMEC	SOMAN	SOMAN	SOMAN	SOMAN	SOMAN
	The "Zone" shown in the sections for stand-alone loops or loops as part of a combination refers to Geographically Deaveraged UNE Zones. To view Geographically Deaveraged UNE Zone Designations by Central Office, refer to internet Website: http://www.interconnection.bellsouth.com/become_a_clec/html/interconnection.htm																
OPERATIONS SUPPORT SYSTEMS (OSS) - "REGIONAL RATES"																	
	NOTE: (1) CLEC should contact its contract negotiator if it prefers the "state specific" OSS charges as ordered by the State Commissions. The OSS charges currently contained in this rate exhibit are the BellSouth "regional" service ordering charges. CLEC may elect either the state specific Commission ordered rates for the service ordering charges, or CLEC may elect the regional service ordering charge, however, CLEC can not obtain a mixture of the two regardless if CLEC has a interconnection contract established in each of the 9 states.																
	NOTE: (2) Any element that can be ordered electronically will be billed according to the SOMEC rate listed in this category. Please refer to BellSouth's Local Ordering Handbook (LOH) to determine if a product can be ordered electronically. For those elements that cannot be ordered electronically at present per the LOH, the listed SOMEC rate in this category reflects the charge that would be billed to a CLEC once electronic ordering capabilities come on-line for that element. Otherwise, the manual ordering charge, SOMAN, will be applied to a CLECs bill when it submits an LSR to BellSouth.																
	NOTE: (3) OSS - Manual Service Order Charge, Per Element - UNE Only **Please see applicable rate element for SOMAN charge**																
		OSS - Electronic Service Order Charge, Per Local Service Request (LSR) - UNE Only				SOMEC		3.50	0.00	3.50	0.00						
UNE SERVICE DATE ADVANCEMENT CHARGE																	
	NOTE: The Expedite charge will be maintained commensurate with BellSouth's FCC No.1 Tariff, Section 5 as applicable.																
		UNE Expedite Charge per Circuit or Line Assignable USOC, per Day			UAL, UEANL, UCL, UEF, UDF, UEQ, UDL, UENTW, UDN, UEA, UHL, ULC, USL, U1T12, U1T48, U1TD1, U1TD3, U1TDX, U1TO3, U1TS1, U1TVX, UC1BC, UC1BL, UC1CC, UC1CL, UC1DC, UC1DL, UC1EC, UC1EL, UC1FC, UC1FL, UC1GC, UC1GL, UC1HC, UC1HL, UDL12, UDL48, UDLO3, UDLSX, UE3, ULD12, ULD48, ULDD1, ULDD3, ULDDX, ULDO3, ULDS1, ULDVX, UNC1X, UNC3X, UNCDX, UNCNX, UNCSX, UNCVX, UNLD1, UNLD3, UXTD1, UXTD3, UXTS1, U1TUC, U1TUD, U1TUB, U1TUA,NTCVG, NTCUD, NTCD1	SDASP		200.00									
ORDER MODIFICATION CHARGE																	
		Order Modification Charge (OMC)						26.21	0.00	0.00	0.00						
		Order Modification Additional Dispatch Charge (OMCAD)						150.00	0.00	0.00	0.00						
UNBUNDLED EXCHANGE ACCESS LOOP																	
	2-WIRE ANALOG VOICE GRADE LOOP																
		2-Wire Analog Voice Grade Loop - Service Level 1- Zone 1		1	UEANL	UEAL2	11.74	31.99	20.02	10.65	1.41			20.35	10.54	13.32	13.32
		2-Wire Analog Voice Grade Loop - Service Level 1- Zone 2		2	UEANL	UEAL2	17.59	31.99	20.02	10.65	1.41			20.35	10.54	13.32	13.32
		2-Wire Analog Voice Grade Loop - Service Level 1- Zone 3		3	UEANL	UEAL2	29.37	31.99	20.02	10.65	1.41			20.35	10.54	13.32	13.32
		2-Wire Analog Voice Grade Loop - Service Level 1- Zone 1		1	UEANL	UEASL	11.74	31.99	20.02	10.65	1.41			20.35	10.54	13.32	13.32
		2-Wire Analog Voice Grade Loop - Service Level 1- Zone 2		2	UEANL	UEASL	17.59	31.99	20.02	10.65	1.41			20.35	10.54	13.32	13.32
		2-Wire Analog Voice Grade Loop - Service Level 1- Zone 3		3	UEANL	UEASL	29.37	31.99	20.02	10.65	1.41			20.35	10.54	13.32	13.32
		Tag Loop at End User Premise			UEANL	URETL		8.95	0.88								
		Loop Testing - Basic 1st Half Hour			UEANL	URET1		57.67	0.00								
		Loop Testing - Basic Additional Half Hour			UEANL	URETA		37.44	37.44								
		Manual Order Coordination for UVL-SL1s (per loop)			UEANL	UEAMC		36.52	36.52								
		Order Coordination for Specified Conversion Time for UVL-SL1 (per LSR)			UEANL	OCOSL		34.29									

UNBUNDLED NETWORK ELEMENTS - Tennessee — Att: 2 Exh: A

CATEGORY	RATE ELEMENTS	Interim	Zone	BCS	USOC	RATES($) Rec	Nonrecurring First	Nonrecurring Add'l	Nonrecurring Disconnect First	Nonrecurring Disconnect Add'l	Svc Order Submitted Elec per LSR (OSS Rates($)) SOMEC	Svc Order Submitted Manually per LSR (OSS Rates($)) SOMAN	Incremental Charge - Manual Svc Order vs. Electronic-1st (OSS Rates($)) SOMAN	Incremental Charge - Manual Svc Order vs. Electronic-Add'l (OSS Rates($)) SOMAN	Incremental Charge - Manual Svc Order vs. Electronic-Disc 1st (OSS Rates($)) SOMAN	Incremental Charge - Manual Svc Order vs. Electronic-Disc Add'l (OSS Rates($)) SOMAN
	Unbundled Non-Design Voice Loop, billing for BST providing make up (Engineering Information - E.I.)			UEANL	UEANM		25.33	25.33								
	Unbundled Loop Service Rearrangement, change in loop facility, per circuit			UEANL	UREWO		15.80	8.95	10.65	1.41			20.35	10.54	13.32	13.32
2-WIRE Unbundled COPPER LOOP																
	2-Wire Unbundled Copper Loop - Non-Designed Zone 1		1	UEQ	UEQ2X	11.74	31.99	20.02	10.65	1.41			20.35	10.54	13.32	13.32
	2 Wire Unbundled Copper Loop - Non-Designed - Zone 2		2	UEQ	UEQ2X	17.59	31.99	20.02	10.65	1.41			20.35	10.54	13.32	13.32
	2 Wire Unbundled Copper Loop - Non-Designed - Zone 3		3	UEQ	UEQ2X	29.37	31.99	20.02	10.65	1.41			20.35	10.54	13.32	13.32
	Tag Loop at End User Premise			UEQ	URETL		8.95	0.88								
	Loop Testing - Basic 1st Half Hour			UEQ	URET1		57.67	0.00								
	Loop Testing - Basic Additional Half Hour			UEQ	URETA		37.44	37.44								
	Manual Order Coordination 2 Wire Unbundled Copper Loop - Non-Designed (per loop)			UEQ	USBMC		36.52	36.52								
	Unbundled Copper Loop - Non-Design, billing for BST providing make-up (Engineering Information - E.I.)			UEQ	UEQMU		25.33	25.33					20.35	10.54	13.32	13.32
	Unbundled Loop Service Rearrangement, change in loop facility, per circuit			UEQ	UREWO		14.29	7.44	10.65	1.41			20.35	10.54	13.32	13.32
UNBUNDLED EXCHANGE ACCESS LOOP																
2-WIRE ANALOG VOICE GRADE LOOP																
	2-Wire Analog Voice Grade Loop - Service Level 2 w/Loop or Ground Start Signaling - Zone 1		1	UEA	UEAL2	14.74	75.06	48.20	28.70	17.64			20.35	10.54	13.32	13.32
	2-Wire Analog Voice Grade Loop - Service Level 2 w/Loop or Ground Start Signaling - Zone 2		2	UEA	UEAL2	22.08	75.06	48.20	28.70	17.64			20.35	10.54	13.32	13.32
	2-Wire Analog Voice Grade Loop - Service Level 2 w/Loop or Ground Start Signaling - Zone 3		3	UEA	UEAL2	36.87	75.06	48.20	28.70	17.64			20.35	10.54	13.32	13.32
	2-Wire Analog Voice Grade Loop - Service Level 2 w/Reverse Battery Signaling - Zone 1		1	UEA	UEAR2	14.74	75.06	48.20	28.70	17.64			20.35	10.54	13.32	13.32
	2-Wire Analog Voice Grade Loop - Service Level 2 w/Reverse Battery Signaling - Zone 2		2	UEA	UEAR2	22.08	75.06	48.20	28.70	17.64			20.35	10.54	13.32	13.32
	2-Wire Analog Voice Grade Loop - Service Level 2 w/Reverse Battery Signaling - Zone 3		3	UEA	UEAR2	36.87	75.06	48.20	28.70	17.64			20.35	10.54	13.32	13.32
	Switch-As-Is Conversion rate per UNE Loop, Single LSR, (per DS0)			UEA	URESL		23.42	3.30					20.35	10.54	13.32	13.32
	Unbundled Loop Service Rearrangement, change in loop facility, per circuit			UEA	UREWO		75.06	36.41					20.35	10.54	13.32	13.32
	Loop Tagging - Service Level 2 (SL2)			UEA	URETL		11.23	1.10								
4-WIRE ANALOG VOICE GRADE LOOP																
	4-Wire Analog Voice Grade Loop - Zone 1		1	UEA	UEAL4	21.98	122.76	85.57	76.35	39.16			20.35	10.54	13.32	13.32
	4-Wire Analog Voice Grade Loop - Zone 2		2	UEA	UEAL4	32.93	122.76	85.57	76.35	39.16			20.35	10.54	13.32	13.32
	4-Wire Analog Voice Grade Loop - Zone 3		3	UEA	UEAL4	54.99	122.76	85.57	76.35	39.16			20.35	10.54	13.32	13.32
	Switch-As-Is Conversion rate per UNE Loop, Single LSR, (per DS0)			UEA	URESL		23.42	3.30					20.35	10.54	13.32	13.32
	Unbundled Loop Service Rearrangement, change in loop facility, per circuit			UEA	UREWO		75.06	36.41					20.35	10.54	13.32	13.32
2-WIRE ISDN DIGITAL GRADE LOOP																
	2-Wire ISDN Digital Grade Loop - Zone 1		1	UDN	U1L2X	19.77	142.76	88.88	76.35	39.16			20.35	10.54	13.32	13.32
	2-Wire ISDN Digital Grade Loop - Zone 2		2	UDN	U1L2X	29.63	142.76	88.88	76.35	39.16			20.35	10.54	13.32	13.32
	2-Wire ISDN Digital Grade Loop - Zone 3		3	UDN	U1L2X	49.47	142.76	88.88	76.35	39.16			20.35	10.54	13.32	13.32
	Unbundled Loop Service Rearrangement, change in loop facility, per circuit			UDN	UREWO		91.77	44.22					20.35	10.54	13.32	13.32
2-WIRE ASYMMETRICAL DIGITAL SUBSCRIBER LINE (ADSL) COMPATIBLE LOOP																
	2 Wire Unbundled ADSL Loop including manual service inquiry & facility reservation - Zone 1		1	UAL	UAL2X	12.30	156.95	64.54	89.64	16.93			20.35	10.54	13.32	13.32
	2 Wire Unbundled ADSL Loop including manual service inquiry & facility reservation - Zone 2		2	UAL	UAL2X	18.43	156.95	64.54	89.64	16.93			20.35	10.54	13.32	13.32
	2 Wire Unbundled ADSL Loop including manual service inquiry & facility reservation - Zone 3		3	UAL	UAL2X	30.77	156.95	64.54	89.64	16.93			20.35	10.54	13.32	13.32
	2 Wire Unbundled ADSL Loop without manual service inquiry & facility reservaton - Zone 1		1	UAL	UAL2W	12.30	89.40	35.91	72.02	11.48			20.35	10.54	13.32	13.32
	2 Wire Unbundled ADSL Loop without manual service inquiry & facility reservaton - Zone 2		2	UAL	UAL2W	18.43	89.40	35.91	72.02	11.48			20.35	10.54	13.32	13.32
	2 Wire Unbundled ADSL Loop without manual service inquiry & facility reservaton - Zone 3		3	UAL	UAL2W	30.77	89.40	35.91	72.02	11.48			20.35	10.54	13.32	13.32

UNBUNDLED NETWORK ELEMENTS - Tennessee — Att: 2 Exh: A

CATEGORY	RATE ELEMENTS	Interim	Zone	BCS	USOC	RATES($) Rec	Nonrecurring First	Nonrecurring Add'l	Nonrecurring Disconnect First	Nonrecurring Disconnect Add'l	Svc Order Submitted Elec per LSR (OSS Rates($)) SOMEC	Svc Order Submitted Manually per LSR (OSS Rates($)) SOMAN	Incremental Charge - Manual Svc Order vs. Electronic-1st (OSS Rates($)) SOMAN	Incremental Charge - Manual Svc Order vs. Electronic-Add'l (OSS Rates($)) SOMAN	Incremental Charge - Manual Svc Order vs. Electronic-Disc 1st (OSS Rates($)) SOMAN	Incremental Charge - Manual Svc Order vs. Electronic-Disc Add'l (OSS Rates($)) SOMAN
	Unbundled Loop Service Rearrangement, change in loop facility, per circuit			UAL	UREWO		31.99	20.02					20.35	10.54	13.32	13.32
2-WIRE HIGH BIT RATE DIGITAL SUBSCRIBER LINE (HDSL) COMPATIBLE LOOP																
	2 Wire Unbundled HDSL Loop including manual service inquiry & facility reservation - Zone 1		1	UHL	UHL2X	9.64	158.94	65.20	89.64	16.93			20.35	10.54	13.32	13.32
	2 Wire Unbundled HDSL Loop including manual service inquiry & facility reservation - Zone 2		2	UHL	UHL2X	14.44	158.94	65.20	89.64	16.93			20.35	10.54	13.32	13.32
	2 Wire Unbundled HDSL Loop including manual service inquiry & facility reservation - Zone 3		3	UHL	UHL2X	24.12	158.94	65.20	89.64	16.93			20.35	10.54	13.32	13.32
	2 Wire Unbundled HDSL Loop without manual service inquiry and facility reservation - Zone 1		1	UHL	UHL2W	9.64	89.40	35.91	72.02	11.48			20.35	10.54	13.32	13.32
	2 Wire Unbundled HDSL Loop without manual service inquiry and facility reservation - Zone 2		2	UHL	UHL2W	14.44	89.40	35.91	72.02	11.48			20.35	10.54	13.32	13.32
	2 Wire Unbundled HDSL Loop without manual service inquiry and facility reservation - Zone 3		3	UHL	UHL2W	24.12	89.40	35.91	72.02	11.48			20.35	10.54	13.32	13.32
	Unbundled Loop Service Rearrangement, change in loop facility, per circuit			UHL	UREWO		31.99	20.02					20.35	10.54	13.32	13.32
4-WIRE HIGH BIT RATE DIGITAL SUBSCRIBER LINE (HDSL) COMPATIBLE LOOP																
	4 Wire Unbundled HDSL Loop including manual service inquiry and facility reservation - Zone 1		1	UHL	UHL4X	12.40	169.62	75.89	39.73	19.53			20.35	10.54	13.32	13.32
	4-Wire Unbundled HDSL Loop including manual service inquiry and facility reservation - Zone 2		2	UHL	UHL4X	18.58	169.62	75.89	39.73	19.53			20.35	10.54	13.32	13.32
	4-Wire Unbundled HDSL Loop including manual service inquiry and facility reservation - Zone 3		3	UHL	UHL4X	31.03	169.62	75.89	39.73	19.53			20.35	10.54	13.32	13.32
	4-Wire Unbundled HDSL Loop without manual service inquiry and facility reservation - Zone 1		1	UHL	UHL4W	12.40	100.09	46.60	75.75	13.97			20.35	10.54	13.32	13.32
	4-Wire Unbundled HDSL Loop without manual service inquiry and facility reservation - Zone 2		2	UHL	UHL4W	18.58	100.09	46.60	75.75	13.97			20.35	10.54	13.32	13.32
	4-Wire Unbundled HDSL Loop without manual service inquiry and facility reservation - Zone 3		3	UHL	UHL4W	31.03	100.09	46.60	75.75	13.97			20.35	10.54	13.32	13.32
	Unbundled Loop Service Rearrangement, change in loop facility, per circuit			UHL	UREWO		31.99	20.02					20.35	10.54	13.32	13.32
4-WIRE DS1 DIGITAL LOOP																
	4-Wire DS1 Digital Loop - Zone 1		1	USL	USLXX	51.38	313.08	219.72	96.86	40.45			18.98	8.43	11.95	11.95
	4-Wire DS1 Digital Loop - Zone 2		2	USL	USLXX	76.98	313.08	219.72	96.86	40.45			18.98	8.43	11.95	11.95
	4-Wire DS1 Digital Loop - Zone 3		3	USL	USLXX	128.54	313.08	219.72	96.86	40.45			18.98	8.43	11.95	11.95
	Switch-As-Is Conversion rate per UNE Loop, Single LSR, (per DS1)			USL	URESL		23.42	3.30								
	Unbundled Loop Service Rearrangement, change in loop facility, per circuit			USL	UREWO		130.47	40.11					20.35	10.54	13.32	13.32
4-WIRE 19.2, 56 OR 64 KBPS DIGITAL GRADE LOOP																
	4 Wire Unbundled Digital Loop 2.4 Kbps - Zone 1		1	UDL	UDL2X	27.68	207.01	141.38	90.70	44.18						
	4 Wire Unbundled Digital Loop 2.4 Kbps - Zone 2		2	UDL	UDL2X	41.47	207.01	141.38	90.70	44.18						
	4 Wire Unbundled Digital Loop 2.4 Kbps - Zone3		3	UDL	UDL2X	69.24	207.01	141.38	90.70	44.18						
	4 Wire Unbundled Digital Loop 4.8 Kbps -Zone 1		1	UDL	UDL4X	27.68	207.01	141.38	90.70	44.18						
	4 Wire Unbundled Digital Loop 4.8 Kbps - Zone 2		2	UDL	UDL4X	41.47	207.01	141.38	90.70	44.18						
	4 Wire Unbundled Digital Loop 4.8 Kbps - Zone 3		3	UDL	UDL4X	69.24	207.01	141.38	90.70	44.18						
	4 Wire Unbundled Digital Loop 9.6 Kbps - Zone 1		1	UDL	UDL9X	27.68	207.01	141.38	90.70	44.18						
	5 Wire Unbundled Digital Loop 9.6 Kbps - Zone 2		2	UDL	UDL9X	41.47	207.01	141.38	90.70	44.18						
	6 Wire Unbundled Digital Loop 9.6 Kbps - Zone 3		3	UDL	UDL9X	69.24	207.01	141.38	90.70	44.18						
	4 Wire Unbundled Digital 19.2 Kbps - Zone 1		1	UDL	UDL19	27.68	207.01	141.38	90.70	44.18			20.35	10.54	13.32	13.32
	4 Wire Unbundled Digital 19.2 Kbps - Zone 2		2	UDL	UDL19	41.47	207.01	141.38	90.70	44.18			20.35	10.54	13.32	13.32
	4 Wire Unbundled Digital 19.2 Kbps - Zone 3		3	UDL	UDL19	69.24	207.01	141.38	90.70	44.18			20.35	10.54	13.32	13.32
	4 Wire Unbundled Digital Loop 56 Kbps - Zone 1		1	UDL	UDL56	27.68	207.01	141.38	90.70	44.18			20.35	10.54	13.32	13.32
	4 Wire Unbundled Digital Loop 56 Kbps - Zone 2		2	UDL	UDL56	41.47	207.01	141.38	90.70	44.18			20.35	10.54	13.32	13.32
	4 Wire Unbundled Digital Loop 56 Kbps - Zone 3		3	UDL	UDL56	69.24	207.01	141.38	90.70	44.18			20.35	10.54	13.32	13.32
	4 Wire Unbundled Digital Loop 64 Kbps - Zone 1		1	UDL	UDL64	27.68	207.01	141.38	90.70	44.18			20.35	10.54	13.32	13.32
	4 Wire Unbundled Digital Loop 64 Kbps - Zone 2		2	UDL	UDL64	41.47	207.01	141.38	90.70	44.18			20.35	10.54	13.32	13.32
	4 Wire Unbundled Digital Loop 64 Kbps - Zone 3		3	UDL	UDL64	69.24	207.01	141.38	90.70	44.18			20.35	10.54	13.32	13.32
	Switch-As-Is Conversion rate per UNE Loop, Single LSR, (per DS0)			UDL	URESL		23.42	3.30					20.35	10.54	13.32	13.32
	Unbundled Loop Service Rearrangement, change in loop facility, per circuit			UDL	UREWO		102.28	49.82					20.35	10.54	13.32	13.32
2-WIRE Unbundled COPPER LOOP																

UNBUNDLED NETWORK ELEMENTS - Tennessee														Att: 2 Exh: A			
CATEGORY		RATE ELEMENTS	Interim	Zone	BCS	USOC	RATES($)					Svc Order Submitted Elec per LSR	Svc Order Submitted Manually per LSR	Incremental Charge - Manual Svc Order vs. Electronic-1st	Incremental Charge - Manual Svc Order vs. Electronic-Add'l	Incremental Charge - Manual Svc Order vs. Electronic-Disc 1st	Incremental Charge - Manual Svc Order vs. Electronic-Disc Add'l
							Rec	Nonrecurring		Nonrecurring Disconnect		OSS Rates($)					
								First	Add'l	First	Add'l	SOMEC	SOMAN	SOMAN	SOMAN	SOMAN	SOMAN
		2-Wire Unbundled Copper Loop-Designed including manual service inquiry & facility reservation - Zone 1		1	UCL	UCLPB	11.74	31.99	20.02	10.65	1.41			20.35	10.54	13.32	13.32
		2-Wire Unbundled Copper Loop-Designed including manual service inquiry & facility reservation - Zone 2		2	UCL	UCLPB	17.59	31.99	20.02	10.65	1.41			20.35	10.54	13.32	13.32
		2 Wire Unbundled Copper Loop-Designed including manual service inquiry & facility reservation - Zone 3		3	UCL	UCLPB	29.37	31.99	20.02	10.65	1.41			20.35	10.54	13.32	13.32
		2-Wire Unbundled Copper Loop-Designed without manual service inquiry and facility reservation - Zone 1		1	UCL	UCLPW	11.74	31.99	20.02	10.65	1.41			20.35	10.54	13.32	13.32
		2-Wire Unbundled Copper Loop-Designed without manual service inquiry and facility reservation - Zone 2		2	UCL	UCLPW	17.59	31.99	20.02	10.65	1.41			20.35	10.54	13.32	13.32
		2-Wire Unbundled Copper Loop-Designed without manual service inquiry and facility reservation - Zone 3		3	UCL	UCLPW	29.37	31.99	20.02	10.65	1.41			20.35	10.54	13.32	13.32
		Order Coordination for Unbundled Copper Loops (per loop)			UCL	UCLMC		36.52	36.52								
		Unbundled Loop Service Rearrangement, change in loop facility, per circuit			UCL	UREWO		31.99	20.02					20.35	10.54	13.32	13.32
	4-WIRE COPPER LOOP																
		4-Wire Copper Loop-Designed including manual service inquiry and facility reservation - Zone 1		1	UCL	UCL4S	21.98	122.76	85.57	76.35	39.16			20.35	10.54	13.32	13.32
		4-Wire Copper Loop-Designed including manual service inquiry and facility reservation - Zone 2		2	UCL	UCL4S	32.93	122.76	85.57	76.35	39.16			20.35	10.54	13.32	13.32
		4-Wire Copper Loop-Designed including manual service inquiry and facility reservation - Zone 3		3	UCL	UCL4S	54.99	122.76	85.57	76.35	39.16			20.35	10.54	13.32	13.32
		4-Wire Copper Loop-Designed without manual service inquiry and facility reservation - Zone 1		1	UCL	UCL4W	21.98	122.76	85.57	76.35	39.16			20.35	10.54	13.32	13.32
		4-Wire Copper Loop-Designed without manual service inquiry and facility reservation - Zone 2		2	UCL	UCL4W	32.93	122.76	85.57	76.35	39.16			20.35	10.54	13.32	13.32
		4-Wire Copper Loop-Designed without manual service inquiry and facility reservation - Zone 3		3	UCL	UCL4W	54.99	122.76	85.57	76.35	39.16			20.35	10.54	13.32	13.32
		Order Coordination for Unbundled Copper Loops (per loop)			UCL	UCLMC		36.52	36.52								
		Unbundled Loop Service Rearrangement, change in loop facility, per circuit			UCL	UREWO		31.99	20.02					20.35	10.54	13.32	13.32
		Order Coordination for Specified Conversion Time (per LSR)			UEA, UDN, UAL, UHL, UDL, USL	OCOSL		34.29									
	Rearrangements																
		EEL to UNE-L Retermination, per 2 Wire Unbundled Voice Loop-SL2			UEA	UREEL		75.06	36.41								
		EEL to UNE-L Retermination, per 4 Wire Unbundled Voice Loop			UEA	UREEL		75.06	36.41								
		EEL to UNE-L Retermination, per 2 Wire ISDN Loop			UDN	UREEL		91.77	44.22								
		EEL to UNE-L Retermination, per 4 Wire Unbundled Digital Loop			UDL	UREEL		102.28	49.82								
		EEL to UNE-L Retermination, per 4 Wire Unbundled DS1 Loop			USL	UREEL		130.47	40.11								
UNE LOOP COMMINGLING																	
	2-WIRE ANALOG VOICE GRADE LOOP - COMMINGLING																
		2-Wire Analog Voice Grade Loop - Service Level 2 w/Loop or Ground Start Signaling - Zone 1		1	NTCVG	UEAL2	14.74	75.06	48.20	28.70	17.64						
		2-Wire Analog Voice Grade Loop - Service Level 2 w/Loop or Ground Start Signaling - Zone 2		2	NTCVG	UEAL2	22.08	75.06	48.20	28.70	17.64						
		2-Wire Analog Voice Grade Loop - Service Level 2 w/Loop or Ground Start Signaling - Zone 3		3	NTCVG	UEAL2	36.87	75.06	48.20	28.70	17.64						
		2-Wire Analog Voice Grade Loop - Service Level 2 w/Reverse Battery Signaling - Zone 1		1	NTCVG	UEAR2	14.74	75.06	48.20	28.70	17.64						
		2-Wire Analog Voice Grade Loop - Service Level 2 w/Reverse Battery Signaling - Zone 2		2	NTCVG	UEAR2	22.08	75.06	48.20	28.70	17.64						
		2-Wire Analog Voice Grade Loop - Service Level 2 w/Reverse Battery Signaling - Zone 3		3	NTCVG	UEAR2	36.87	75.06	48.20	28.70	17.64						
		Switch-As-Is Conversion rate per UNE Loop, Single LSR, (per DS0)			NTCVG	URESL		23.42	3.30								
		Unbundled Loop Service Rearrangement, change in loop facility, per circuit			NTCVG	UREWO		75.06	36.41								
		Loop Tagging - Service Level 2 (SL2)			NTCVG	URETL		11.23	1.10								
	4-WIRE ANALOG VOICE GRADE LOOP																
		4-Wire Analog Voice Grade Loop - Zone 1		1	NTCVG	UEAL4	21.98	122.76	85.57	76.35	39.16						
		4-Wire Analog Voice Grade Loop - Zone 2		2	NTCVG	UEAL4	32.93	122.76	85.57	76.35	39.16						

UNBUNDLED NETWORK ELEMENTS - Tennessee														Att: 2 Exh: A			
CATEGORY		RATE ELEMENTS	Interim	Zone	BCS	USOC	RATES($)					Svc Order Submitted Elec per LSR	Svc Order Submitted Manually per LSR	Incremental Charge - Manual Svc Order vs. Electronic-1st	Incremental Charge - Manual Svc Order vs. Electronic-Add'l	Incremental Charge - Manual Svc Order vs. Electronic-Disc 1st	Incremental Charge - Manual Svc Order vs. Electronic-Disc Add'l
							Rec	Nonrecurring		Nonrecurring Disconnect		OSS Rates($)					
								First	Add'l	First	Add'l	SOMEC	SOMAN	SOMAN	SOMAN	SOMAN	SOMAN
		4-Wire Analog Voice Grade Loop - Zone 3		3	NTCVG	UEAL4	54.99	122.76	85.57	76.35	39.16						
		Switch-As-Is Conversion rate per UNE Loop, Single LSR, (per DS0)			NTCVG	URESL		23.42	3.30								
		Unbundled Loop Service Rearrangement, change in loop facility, per circuit			NTCVG	UREWO		75.06	36.41								
	4-WIRE DS1 DIGITAL LOOP - COMMINGLING																
		4-Wire DS1 Digital Loop - Zone 1		1	NTCD1	USLXX	51.38	313.08	219.72	96.86	40.45						
		4-Wire DS1 Digital Loop - Zone 2		2	NTCD1	USLXX	76.98	313.08	219.72	96.86	40.45						
		4-Wire DS1 Digital Loop - Zone 3		3	NTCD1	USLXX	128.54	313.08	219.72	96.86	40.45						
		Switch-As-Is Conversion rate per UNE Loop, Single LSR, (per DS1)			NTCD1	URESL		23.42	3.30								
		Unbundled Loop Service Rearrangement, change in loop facility, per circuit			NTCD1	UREWO		130.47	40.11								
	4-WIRE 19.2, 56 OR 64 KBPS DIGITAL GRADE LOOP																
		4 Wire Unbundled Digital Loop 2.4 Kbps - Zone 1		1	NTCUD	UDL2X	27.68	207.01	141.38	90.70	44.18						
		4 Wire Unbundled Digital Loop 2.4 Kbps - Zone 2		2	NTCUD	UDL2X	41.47	207.01	141.38	90.70	44.18						
		4 Wire Unbundled Digital Loop 2.4 Kbps - Zone3		3	NTCUD	UDL2X	69.24	207.01	141.38	90.70	44.18						
		4 Wire Unbundled Digital Loop 4.8 Kbps -Zone 1		1	NTCUD	UDL4X	27.68	207.01	141.38	90.70	44.18						
		4 Wire Unbundled Digital Loop 4.8 Kbps - Zone 2		2	NTCUD	UDL4X	41.47	207.01	141.38	90.70	44.18						
		4 Wire Unbundled Digital Loop 4.8 Kbps - Zone 3		3	NTCUD	UDL4X	69.24	207.01	141.38	90.70	44.18						
		4 Wire Unbundled Digital Loop 9.6 Kbps - Zone 1		1	NTCUD	UDL9X	27.68	207.01	141.38	90.70	44.18						
		5 Wire Unbundled Digital Loop 9.6 Kbps - Zone 2		2	NTCUD	UDL9X	41.47	207.01	141.38	90.70	44.18						
		6 Wire Unbundled Digital Loop 9.6 Kbps - Zone 3		3	NTCUD	UDL9X	69.24	207.01	141.38	90.70	44.18						
		4 Wire Unbundled Digital 19.2 Kbps - Zone 1		1	NTCUD	UDL19	27.68	207.01	141.38	90.70	44.18						
		4 Wire Unbundled Digital 19.2 Kbps - Zone 2		2	NTCUD	UDL19	41.47	207.01	141.38	90.70	44.18						
		4 Wire Unbundled Digital 19.2 Kbps - Zone 3		3	NTCUD	UDL19	69.24	207.01	141.38	90.70	44.18						
		4 Wire Unbundled Digital Loop 56 Kbps - Zone 1		1	NTCUD	UDL56	27.68	207.01	141.38	90.70	44.18						
		4 Wire Unbundled Digital Loop 56 Kbps - Zone 2		2	NTCUD	UDL56	41.47	207.01	141.38	90.70	44.18						
		4 Wire Unbundled Digital Loop 56 Kbps - Zone 3		3	NTCUD	UDL56	69.24	207.01	141.38	90.70	44.18						
		4 Wire Unbundled Digital Loop 64 Kbps - Zone 1		1	NTCUD	UDL64	27.68	207.01	141.38	90.70	44.18						
		4 Wire Unbundled Digital Loop 64 Kbps - Zone 2		2	NTCUD	UDL64	41.47	207.01	141.38	90.70	44.18						
		4 Wire Unbundled Digital Loop 64 Kbps - Zone 3		3	NTCUD	UDL64	69.24	207.01	141.38	90.70	44.18						
		Switch-As-Is Conversion rate per UNE Loop, Single LSR, (per DS0)			NTCUD	URESL		23.42	3.30								
		Unbundled Loop Service Rearrangement, change in loop facility, per circuit			NTCUD	UREWO		102.28	49.82								
		Order Coordination for Specified Conversion Time (per LSR)			NTCVG, NTCUD, NTCD1	OCOSL		34.29									
MAINTENANCE OF SERVICE																	
		Maintenance of Service Charge, Basic Time, per half hour			UDC, UEA, UDL, UDN, USL, UAL, UHL, UCL, NTCVG, NTCUD, NTCD1, U1TD1, U1TD3, U1TDX, U1TS1, U1TVX, UDF, UDFCX, UDLSX, UE3, ULDD1, ULDD3, ULDDX, ULDS1, ULDVX, UNC1X, UNC3X, UNCDX, UNCSX, UNCVX, ULS	MVVBT		80.00	55.00								

UNBUNDLED NETWORK ELEMENTS - Tennessee														Att: 2 Exh: A			
CATEGORY		RATE ELEMENTS	Interim	Zone	BCS	USOC	RATES($)					Svc Order Submitted Elec per LSR	Svc Order Submitted Manually per LSR	Incremental Charge - Manual Svc Order vs. Electronic-1st	Incremental Charge - Manual Svc Order vs. Electronic-Add'l	Incremental Charge - Manual Svc Order vs. Electronic-Disc 1st	Incremental Charge - Manual Svc Order vs. Electronic-Disc Add'l
							Rec	Nonrecurring		Nonrecurring Disconnect		OSS Rates($)					
								First	Add'l	First	Add'l	SOMEC	SOMAN	SOMAN	SOMAN	SOMAN	SOMAN
		Maintenance of Service Charge, Overtime, per half hour			UDC, UEA, UDL, UDN, USL, UAL, UHL, UCL, NTCVG, NTCUD, NTCD1, U1TD1, U1TD3, U1TDX, U1TS1, U1TVX, UDF, UDFCX, UDLSX, UE3, ULDD1, ULDD3, ULDDX, ULDS1, ULDVX, UNC1X, UNC3X, UNCDX, UNCSX, UNCVX, ULS	MVVOT		90.00	65.00								
		Maintenance of Service Charge, Premium, per half hour			UDC, UEA, UDL, UDN, USL, UAL, UHL, UCL, NTCVG, NTCUD, NTCD1, U1TD1, U1TD3, U1TDX, U1TS1, U1TVX, UDF, UDFCX, UDLSX, UE3, ULDD1, ULDD3, ULDDX, ULDS1, ULDVX, UNC1X, UNC3X, UNCDX, UNCSX, UNCVX, ULS	MVVPT		100.00	75.00								
LOOP MODIFICATION																	
	Service Order charges will only apply once per Loop																
		Unbundled Loop Modification, Removal of Load Coils - 2 Wire pair less than or equal to 18k ft, per Unbundled Loop			UAL, UHL, UCL, UEQ, ULS, UEA, UEANL, UEPSR, UEPSB	ULM2L		65.40	65.40								
		Unbundled Loop Modification Removal of Load Coils - 4 Wire less than or equal to 18K ft, per Unbundled Loop			UHL, UCL, UEA	ULM4L		65.40	65.40								
		Unbundled Loop Modification Removal of Bridged Tap Removal, per unbundled loop			UAL, UHL, UCL, UEQ, ULS, UEA, UEANL, UEPSR, UEPSB	ULMBT		65.44	65.44								
SUB-LOOPS																	
	Sub-Loop Distribution																
		Sub-Loop - Per Cross Box Location - CLEC Feeder Facility Set-Up			UEANL, UEF	USBSA		517.25	517.25					20.35	10.54	13.32	13.32
		Sub-Loop - Per Cross Box Location - Per 25 Pair Panel Set-Up			UEANL, UEF	USBSB		42.68	42.68					20.35	10.54	13.32	13.32
		Sub-Loop - Per Building Equipment Room - CLEC Feeder Facility Set-Up			UEANL	USBSC		313.01	313.01					20.35	10.54	13.32	13.32
		Sub-Loop - Per Building Equipment Room - Per 25 Pair Panel Set-Up			UEANL	USBSD		108.06	108.06					20.35	10.54	13.32	13.32
		Sub-Loop Distribution Per 2-Wire Analog Voice Grade Loop - Statewide			UEANL	USBN2	10.02	148.84	112.34	73.14	36.65			20.35	10.54	13.32	13.32
		Order Coordination for Unbundled Sub-Loops, per sub-loop pair			UEANL	USBMC		36.52	36.52								
		Sub-Loop Distribution Per 4-Wire Analog Voice Grade Loop - Zone 1		1	UEANL	USBN4	6.54	106.85	51.20	74.08	11.55			20.35	10.54	13.32	13.32
		Sub-Loop Distribution Per 4-Wire Analog Voice Grade Loop - Zone 2		2	UEANL	USBN4	9.80	106.85	51.20	74.08	11.55			20.35	10.54	13.32	13.32
		Sub-Loop Distribution Per 4-Wire Analog Voice Grade Loop - Zone 3		3	UEANL	USBN4	16.36	106.85	51.20	74.08	11.55			20.35	10.54	13.32	13.32
		Order Coordination for Unbundled Sub-Loops, per sub-loop pair			UEANL	USBMC		36.52	36.52								
		Sub-Loop 2-Wire Intrabuilding Network Cable (INC)			UEANL	USBR2	1.35	94.56	29.35					20.35	10.54	13.32	13.32

UNBUNDLED NETWORK ELEMENTS - Tennessee																	Att: 2 Exh: A
CATEGORY		RATE ELEMENTS	Interim	Zone	BCS	USOC	RATES($)					Svc Order Submitted Elec per LSR	Svc Order Submitted Manually per LSR	Incremental Charge - Manual Svc Order vs. Electronic-1st	Incremental Charge - Manual Svc Order vs. Electronic-Add'l	Incremental Charge - Manual Svc Order vs. Electronic-Disc 1st	Incremental Charge - Manual Svc Order vs. Electronic-Disc Add'l
							Rec	Nonrecurring		Nonrecurring Disconnect		OSS Rates($)					
								First	Add'l	First	Add'l	SOMEC	SOMAN	SOMAN	SOMAN	SOMAN	SOMAN
		Order Coordination for Unbundled Sub-Loops, per sub-loop pair			UEANL	USBMC		36.52	36.52								
		Sub-Loop 4-Wire Intrabuilding Network Cable (INC)			UEANL	USBR4	2.26	116.14	37.10					20.35	10.54	13.32	13.32
		Order Coordination for Unbundled Sub-Loops, per sub-loop pair			UEANL	USBMC		36.52	36.52								
		Loop Testing - Basic 1st Half Hour			UEANL	URET1		57.67	0.00								
		Loop Testing - Basic Additional Half Hour			UEANL	URETA		37.44	37.44								
		2 Wire Copper Unbundled Sub-Loop Distribution - Zone 1		1	UEF	UCS2X	4.67	81.40	25.75	70.82	9.55			20.35	10.54	13.32	13.32
		2 Wire Copper Unbundled Sub-Loop Distribution - Zone 2		2	UEF	UCS2X	6.99	81.40	25.75	70.82	9.55			20.35	10.54	13.32	13.32
		2 Wire Copper Unbundled Sub-Loop Distribution - Zone 3		3	UEF	UCS2X	11.67	81.40	25.75	70.82	9.55			20.35	10.54	13.32	13.32
		Order Coordination for Unbundled Sub-Loops, per sub-loop pair			UEF	USBMC		36.52	36.52								
		4 Wire Copper Unbundled Sub-Loop Distribution - Zone 1		1	UEF	UCS4X	5.85	81.74	26.08	74.08	11.55			20.35	10.54	13.32	13.32
		4 Wire Copper Unbundled Sub-Loop Distribution - Zone 2		2	UEF	UCS4X	8.76	81.74	26.08	74.08	11.55			20.35	10.54	13.32	13.32
		4 Wire Copper Unbundled Sub-Loop Distribution - Zone 3		3	UEF	UCS4X	14.63	81.74	26.08	74.08	11.55			20.35	10.54	13.32	13.32
		Order Coordination for Unbundled Sub-Loops, per sub-loop pair			UEF	USBMC		36.52	36.52								
		Loop Tagging Service Level 1, Unbundled Copper Loop, Non-Designed and Distribution Subloops			UEF, UEANL	URETL		8.95	0.88								
		Loop Testing - Basic 1st Half Hour			UEF	URET1		57.67	0.00								
		Loop Testing - Basic Additional Half Hour			UEF	URETA		37.44	37.44								
	Unbundled Sub-Loop Modification																
		Unbundled Sub-Loop Modification - 2-W Copper Dist Load Coil/Equip Removal per 2-W PR			UEF	ULM2X		335.36	7.82								
		Unbundled Sub-loop Modification - 4-W Copper Dist Load Coil/Equip Removal per 4-W PR			UEF	ULM4X		335.36	7.82								
		Unbundled Loop Modification, Removal of Bridge Tap, per unbundled loop			UEF	ULMBT		528.48	9.74								
	Unbundled Network Terminating Wire (UNTW)																
		Unbundled Network Terminating Wire (UNTW) per Pair			UENTW	UENPP	0.4555	2.48	2.48	0.5814	0.5814			20.35	10.54	13.32	13.32
	Network Interface Device (NID)																
		Network Interface Device (NID) - 1-2 lines			UENTW	UND12		63.46	31.06	0.6391	0.6391			20.35	10.54	13.32	13.32
		Network Interface Device (NID) - 1-6 lines			UENTW	UND16		63.46	31.06	0.6522	0.6522			20.35	10.54	13.32	13.32
		Network Interface Device Cross Connect - 2 W			UENTW	UNDC2		8.75	8.75					20.35	10.54	13.32	13.32
		Network Interface Device Cross Connect - 4W			UENTW	UNDC4		8.75	8.75					20.35	10.54	13.32	13.32
UNE OTHER, PROVISIONING ONLY - NO RATE																	
		Unbundled Contact Name, Provisioning Only - no rate			UAL, UCL, UDC, UDL, UDN, UEA, UHL, UEANL, UEF, UEQ, UENTW, NTCVG, NTCUD, NTCD1, USL	UNECN	0.00	0.00									
		Unbundled DS1 Loop - Superframe Format Option - no rate			USL, NTCD1	CCOSF		0.00									
		Unbundled DS1 Loop - Expanded Superframe Format option - no rate			USL, NTCD1	CCOEF		0.00									
		NID - Dispatch and Service Order for NID installation			UENTW	UNDBX	0.00	0.00									
		UNTW Circuit Establishment, Provisioning Only - No Rate			UENTW	UENCE	0.00	0.00									
LOOP MAKE-UP																	
		Loop Makeup - Preordering Without Reservation, per working or spare facility queried (Manual).			UMK	UMKLW		0.76	0.76					20.35	10.54	13.32	13.32
		Loop Makeup - Preordering With Reservation, per spare facility queried (Manual).			UMK	UMKLP		0.76	0.76					20.35	10.54	13.32	13.32
		Loop Makeup--With or Without Reservation, per working or spare facility queried (Mechanized)			UMK	UMKMQ		0.76	0.76					20.35	10.54	13.32	13.32
LINE SPLITTING																	
	END USER ORDERING-CENTRAL OFFICE BASED																
		Line Splitting - per line activation DLEC owned splitter			UEPSR UEPSB	UREOS	0.61										
		Line Splitting - per line activation BST owned - physical			UEPSR UEPSB	UREBP	0.61	48.96	21.39	35.06	10.79			20.35	10.54	13.32	13.32
		Line Splitting - per line activation BST owned - virtual			UEPSR UEPSB	UREBV	0.61	48.96	21.39	35.06	10.79			20.35	10.54	13.32	13.32
	END USER ORDERING - REMOTE SITE LINE SPLITTING																
		Remote Site Shared Loop Line Activation for End Users - CLEC Owned Splitter			UEPSR UEPSB	URERS	0.61	53.40	21.61	6.70	6.70			0.00	0.00	0.00	0.00
		Remote Site Shared Loop - Subsequent Activity - CLEC Owned Splitter			UEPSR UEPSB	URERA		50.57	20.06					0.00	0.00	0.00	0.00

UNBUNDLED NETWORK ELEMENTS - Tennessee														Att: 2 Exh: A			
CATEGORY		RATE ELEMENTS	Interim	Zone	BCS	USOC	RATES($)					Svc Order Submitted Elec per LSR	Svc Order Submitted Manually per LSR	Incremental Charge - Manual Svc Order vs. Electronic-1st	Incremental Charge - Manual Svc Order vs. Electronic-Add'l	Incremental Charge - Manual Svc Order vs. Electronic-Disc 1st	Incremental Charge - Manual Svc Order vs. Electronic-Disc Add'l
							Rec	Nonrecurring		Nonrecurring Disconnect		OSS Rates($)					
								First	Add'l	First	Add'l	SOMEC	SOMAN	SOMAN	SOMAN	SOMAN	SOMAN
	UNBUNDLED EXCHANGE ACCESS LOOP																
	2-WIRE ANALOG VOICE GRADE LOOP																
		2 Wire Analog Voice Grade Loop-Service Level 1-Line Splitting-Zone 1		1	UEPSR UEPSB	UEALS	11.74	31.99	20.02	10.65	1.41			20.35	10.54	13.32	13.32
		2 Wire Analog Voice Grade Loop-Service Level 1-Line Splitting-Zone 1		1	UEPSR UEPSB	UEABS	11.74	31.99	20.02	10.65	1.41			20.35	10.54	13.32	13.32
		2 Wire Analog Voice Grade Loop- Service Level 1-Line Splitting-Zone 2		2	UEPSR UEPSB	UEALS	17.59	31.99	20.02	10.65	1.41			20.35	10.54	13.32	13.32
		2 Wire Analog Voice Grade Loop- Service Level 1-Line Splitting-Zone 2		2	UEPSR UEPSB	UEABS	17.59	31.99	20.02	10.65	1.41			20.35	10.54	13.32	13.32
		2 Wire Analog Voice Grade Loop-Service Level 1-Line Splitting-Zone 3		3	UEPSR UEPSB	UEALS	29.37	31.99	20.02	10.65	1.41			20.35	10.54	13.32	13.32
		2 Wire Analog Voice Grade Loop-Service Level 1-Line Splitting-Zone 3		3	UEPSR UEPSB	UEABS	29.37	31.99	20.02	10.65	1.41			20.35	10.54	13.32	13.32
	PHYSICAL COLLOCATION																
		Physical Collocation-2 Wire Cross Connects (Loop) for Line Splitting			UEPSR UEPSB	PE1LS	0.0475	11.62	9.90	10.38	8.66			0.00	0.00	0.00	0.00
	VIRTUAL COLLOCATION																
		Virtual Collocation-2 Wire Cross Connects (Loop) for Line Splitting			UEPSR UEPSB	VE1LS	0.57	11.62	9.90	10.38	8.66			2.07	2.81	0.67	1.41
UNBUNDLED DEDICATED TRANSPORT																	
	INTEROFFICE CHANNEL - DEDICATED TRANSPORT - Stand Alone																
		Interoffice Channel - 2-Wire Voice Grade - per mile			U1TVX	1L5XX	0.0174										
		Interoffice Channel - 2-Wire Voice Grade - Facility Termination			U1TVX	U1TV2	18.58	55.39	17.37	27.96	3.51			20.35	21.09	9.80	10.54
		Interoffice Channel - 2-Wire Voice Grade Rev Bat. - per mile			U1TVX	1L5XX	0.0174										
		Interoffice Channel - 2-Wire VG Rev Bat. - Facility Termination			U1TVX	U1TR2	18.58	55.39	17.37	27.96	3.51			20.35	21.09	9.80	10.54
		Interoffice Channel - 4-Wire Voice Grade - per mile			U1TVX	1L5XX	0.0174										
		Interoffice Channel - 4- Wire Voice Grade - Facility Termination			U1TVX	U1TV4	24.09	37.87	26.02	30.78	13.07			15.08	15.08	9.80	10.54
		Interoffice Channel - 56 kbps - per mile			U1TDX	1L5XX	0.0174										
		Interoffice Channel - 56 kbps - Facility Termination			U1TDX	U1TD5	17.98	55.39	17.37	27.96	3.51			20.35	21.09	9.80	10.54
		Interoffice Channel - 64 kbps - per mile			U1TDX	1L5XX	0.0174										
		Interoffice Channel - 64 kbps - Facility Termination			U1TDX	U1TD6	17.98	55.39	17.37	27.96	3.51			20.35	21.09	9.80	10.54
		Interoffice Channel - DS1 - per mile			U1TD1	1L5XX	0.3562										
		Interoffice Channel - DS1 - Facility Termination			U1TD1	U1TF1	77.86	112.40	76.27	19.55	14.99			20.35	21.09	9.80	10.54
		Interoffice Channel - DS3 - per mile			U1TD3	1L5XX	2.34										
		Interoffice Channel - DS3 - Facility Termination			U1TD3	U1TF3	848.99	395.29	176.56	109.04	105.91			36.84	36.84	19.01	19.01
		Interoffice Channel - STS-1 - per mile			U1TS1	1L5XX	2.34										
		Interoffice Channel - STS-1 - Facility Termination			U1TS1	U1TFS	849.30	395.29	176.56	109.04	105.91			36.84	36.84	19.01	19.01
	UNBUNDLED DARK FIBER - Stand Alone or in Combination																
		Dark Fiber - Interoffice Transport, Per Four Fiber Strands, Per Route Mile Or Fraction Thereof			UDF, UDFCX	1L5DF	28.74										
		Dark Fiber - Interoffice Transport, Per Four Fiber Strands, Per Route Mile Or Fraction Thereof			UDF, UDFCX	UDF14		1,121.00	153.19	580.26	357.17						
HIGH CAPACITY UNBUNDLED LOCAL LOOP																	
	DS-3/STS-1 UNBUNDLED LOCAL LOOP - Stand Alone																
		DS3 Unbundled Local Loop - per mile			UE3	1L5ND	9.19										
		DS3 Unbundled Local Loop - Facility Termination			UE3	UE3PX	374.24	595.37	304.50	234.83	170.16			36.84	36.84	19.01	19.01
		STS-1Unbundled Local Loop - per mile			UDLSX	1L5ND	9.19										
		STS-1 Unbundled Local Loop - Facility Termination			UDLSX	UDLS1	389.35	595.37	304.50	234.83	170.16			36.84	36.84	19.01	19.01
ENHANCED EXTENDED LINK (EELs)																	
	Network Elements Used in Combinations																
		2-Wire VG Loop (SL2) in Combination - Zone 1		1	UNCVX	UEAL2	14.74	108.76	35.47	72.94	10.86			31.26	10.42		
		2-Wire VG Loop (SL2) in Combination - Zone 2		2	UNCVX	UEAL2	22.08	108.76	35.47	72.94	10.86			31.26	10.42		
		2-Wire VG Loop (SL2) in Combination - Zone 3		3	UNCVX	UEAL2	36.87	108.76	35.47	72.94	10.86			31.26	10.42		
		4-Wire Analog Voice Grade Loop in Combination - Zone 1		1	UNCVX	UEAL4	21.98	108.76	35.47	72.94	10.86			31.26	10.42		
		4-Wire Analog Voice Grade Loop in Combination - Zone 2		2	UNCVX	UEAL4	32.93	108.76	35.47	72.94	10.86			31.26	10.42		
		4-Wire Analog Voice Grade Loop in Combination - Zone 3		3	UNCVX	UEAL4	54.99	108.76	35.47	72.94	10.86			31.26	10.42		
		2-Wire ISDN Loop in Combination - Zone 1		1	UNCNX	U1L2X	19.77	108.76	35.47	72.94	10.86			31.26	10.42		
		2-Wire ISDN Loop in Combination - Zone 2		2	UNCNX	U1L2X	29.63	108.76	35.47	72.94	10.86			31.26	10.42		
		2-Wire ISDN Loop in Combination - Zone 3		3	UNCNX	U1L2X	49.47	108.76	35.47	72.94	10.86			31.26	10.42		
		4-Wire 56Kbps Digital Grade Loop in Combination - Zone 1		1	UNCDX	UDL56	27.68	108.76	35.47	72.94	10.86			20.35	10.54	13.32	
		4-Wire 56Kbps Digital Grade Loop in Combination - Zone 2		2	UNCDX	UDL56	41.47	108.76	35.47	72.94	10.86			20.35	10.54	13.32	

UNBUNDLED NETWORK ELEMENTS - Tennessee — Att: 2 Exh: A

CATEGORY	RATE ELEMENTS	Interim	Zone	BCS	USOC	RATES($) Rec	Nonrecurring First	Nonrecurring Add'l	Nonrecurring Disconnect First	Nonrecurring Disconnect Add'l	Svc Order Submitted Elec per LSR	Svc Order Submitted Manually per LSR	Incremental Charge - Manual Svc Order vs. Electronic-1st	Incremental Charge - Manual Svc Order vs. Electronic-Add'l	Incremental Charge - Manual Svc Order vs. Electronic-Disc 1st	Incremental Charge - Manual Svc Order vs. Electronic-Disc Add'l
											OSS Rates($)					
							First	Add'l	First	Add'l	SOMEC	SOMAN	SOMAN	SOMAN	SOMAN	SOMAN
	4-Wire 56Kbps Digital Grade Loop in Combination - Zone 3		3	UNCDX	UDL56	69.24	108.76	35.47	72.94	10.86			20.35	10.54	13.32	
	4-Wire 64Kbps Digital Grade Loop in Combination - Zone 1		1	UNCDX	UDL64	27.68	108.76	35.47	72.94	10.86			20.35	10.54	13.32	
	4-Wire 64Kbps Digital Grade Loop in Combination - Zone 2		2	UNCDX	UDL64	41.47	108.76	35.47	72.94	10.86			20.35	10.54	13.32	
	4-Wire 64Kbps Digital Grade Loop in Combination - Zone 3		3	UNCDX	UDL64	69.24	108.76	35.47	72.94	10.86			20.35	10.54	13.32	
	4-Wire DS1 Digital Loop in Combination - Zone 1		1	UNC1X	USLXX	51.38	228.40	161.74	79.87	24.88			18.98	8.43	11.95	
	4-Wire DS1 Digital Loop in Combination - Zone 2		2	UNC1X	USLXX	76.98	228.40	161.74	79.87	24.88			18.98	8.43	11.95	
	4-Wire DS1 Digital Loop in Combination - Zone 3		3	UNC1X	USLXX	128.54	228.40	161.74	79.87	24.88			18.98	8.43	11.95	
	DS3 Local Loop in combination - per mile			UNC3X	1L5ND	9.19										
	DS3 Local Loop in combination - Facility Termination			UNC3X	UE3PX	374.24	1,260.47	628.84	106.78	45.24			36.84	36.84	19.01	19.01
	STS-1 Local Loop in combination - per mile			UNCSX	1L5ND	9.19										
	STS-1 Local Loop in combination - Facility Termination			UNCSX	UDLS1	389.35	1,260.47	628.84	79.87	24.88			36.84	36.84	19.01	19.01
	Interoffice Channel in combination - 2-wire VG - per mile			UNCVX	1L5XX	0.0174										
	Interoffice Channel in combination - 2-wire VG - Facility Termination			UNCVX	U1TV2	18.58	79.83	44.08	69.32	31.00			20.35	21.09	9.80	10.54
	Interoffice Channel in combination - 4-wire VG - per mile			UNCVX	1L5XX	0.0174										
	Interoffice Channel in combination - 4-wire VG - Facility Termination			UNCVX	U1TV4	24.09	79.83	44.08	69.32	31.00			15.08	15.08	8.66	8.66
	Interoffice Channel in combination - 4-wire 56 kbps - per mile			UNCDX	1L5XX	0.0174										
	Interoffice Channel in combination - 4-wire 56 kbps - Facility Termination			UNCDX	U1TD5	17.98	79.83	44.08	69.32	31.00			20.35	21.09	9.80	10.54
	Interoffice Channel in combination - 4-wire 64 kbps - per mile			UNCDX	1L5XX	0.0174										
	Interoffice Channel in combination - 4-wire 64 kbps - Facility Termination			UNCDX	U1TD6	17.98	79.83	44.08	69.32	31.00			20.35	21.09	9.80	10.54
	Interoffice Channel in combination - DS1 - per mile			UNC1X	1L5XX	0.3562										
	Interoffice Channel in combination - DS1 Facility Termination			UNC1X	U1TF1	77.86	171.24	113.12	70.07	30.90			20.35	21.09	9.80	10.54
	Interoffice Channel in combination - DS3 - per mile			UNC3X	1L5XX	2.34										
	Interoffice Channel in combination - DS3 - Facility Termination			UNC3X	U1TF3	848.99	482.01	153.81	64.43	35.43			36.84	36.84	19.01	19.01
	Interoffice Channel in combination - STS-1 - per mile			UNCSX	1L5XX	2.34										
	Interoffice Channel in combination - STS-1 Facility Termination			UNCSX	U1TFS	849.30	482.01	153.81	64.43	35.43			36.84	36.84	19.01	19.01
ADDITIONAL NETWORK ELEMENTS																
	Optional Features & Functions:															
	Clear Channel Capability Extended Frame Option - per DS1	I		U1TD1, ULDD1,UNC1X	CCOEF		0.00	0.00	0.00	0.00						
	Clear Channel Capability Super FrameOption - per DS1	i		U1TD1, ULDD1,UNC1X	CCOSF		0.00	0.00	0.00	0.00						
	Clear Channel Capability (SF/ESF) Option - Subsequent Activity - per DS1	I		ULDD1, U1TD1, UNC1X, USL	NRCCC		185.16	23.86	2.03	0.79						
	C-bit Parity Option - Subsequent Activity - per DS3	i		U1TD3, ULDD3, UE3, UNC3X	NRCC3		219.46	7.68	0.7637							
	DS1/DS0 Channel System			UNC1X	MQ1	80.77	105.76	14.48	3.04	2.74						
	DS3/DS1Channel System			UNC3X, UNCSX	MQ3	222.98	156.02	49.41	17.12	6.77			20.35	9.80	11.49	1.18
	Voice Grade COCI in combination			UNCVX	1D1VG	1.82	5.70	4.42								
	Voice Grade COCI - for 2W-SL2 & 4W Voice Grade Local Loop			UEA	1D1VG	1.82	5.70	4.42								
	Voice Grade COCI - for connection to a channelized DS1 Local Channel in the same SWC as collocation			U1TUC	1D1VG	1.82	5.70	4.42								
	OCU-DP COCI (2.4-64kbs) in combination			UNCDX	1D1DD	0.91	5.70	4.42					20.35	9.80	11.49	1.18
	OCU-DP COCI (2.4-64kbs) - for Unbundled Digital Loop			UDL	1D1DD	0.91	5.70	4.42								
	OCU-DP COCI (2.4-64kbs) - for connection to a channelized DS1 Local Channel in the same SWC as collocation			U1TUD	1D1DD	0.91	5.70	4.42								
	2-wire ISDN COCI (BRITE) in combination			UNCNX	UC1CA	17.58	5.70	4.42					20.35	9.80	11.49	1.18
	2-wire ISDN COCI (BRITE) - for a Local Loop			UDN	UC1CA	17.58	5.70	4.42								
	2-wire ISDN COCI (BRITE) - for connection to a channelized DS1 Local Channel in the same SWC as collocation			U1TUB	UC1CA	17.58	5.70	4.42								
	DS1 COCI in combination			UNC1X	UC1D1	17.58	5.70	4.42					20.35	9.80	11.49	1.18
	DS1 COCI - for Stand Alone Local Channel			ULDD1	UC1D1	17.58	5.70	4.42								
	DS1 COCI - for Stand Alone Interoffice Channel			U1TD1	UC1D1	17.58	5.70	4.42								
	DS1 COCI - for DS1 Local Loop			USL, NTCD1	UC1D1	17.58	5.70	4.42								
	DS1 COCI - for connection to a channelized DS1 Local Channel in the same SWC as collocation			U1TUA	UC1D1	17.58	5.70	4.42								

UNBUNDLED NETWORK ELEMENTS - Tennessee — Att: 2 Exh: A

CATEGORY	RATE ELEMENTS	Interim	Zone	BCS	USOC	RATES($) Rec	Nonrecurring First	Nonrecurring Add'l	Nonrecurring Disconnect First	Nonrecurring Disconnect Add'l	Svc Order Submitted Elec per LSR	Svc Order Submitted Manually per LSR	Incremental Charge - Manual Svc Order vs. Electronic- 1st	Incremental Charge - Manual Svc Order vs. Electronic- Add'l	Incremental Charge - Manual Svc Order vs. Electronic- Disc 1st	Incremental Charge - Manual Svc Order vs. Electronic- Disc Add'l
											OSS Rates($)					
							First	Add'l	First	Add'l	SOMEC	SOMAN	SOMAN	SOMAN	SOMAN	SOMAN
	Wholesale - UNE, Switch-As-Is Conversion Charge			UNCVX, UNCDX, UNC1X, UNC3X, UNCSX, UDFCX, XDH1X, HFQC6, XDD2X, XDV6X, XDDFX, XDD4X, HFRST, UNCNX	UNCCC		52.73	24.62	9.12	9.12						
	Unbundled Misc Rate Element, SNE SAI, Single Network Element - Switch As Is Non-recurring Charge, per circuit (LSR)	I		U1TVX, U1TDX, U1TD1, U1TD3, U1TS1, UDF, UE3	URESL		34.53	15.11								
Access to DCS - Customer Reconfiguration (FlexServ)																
	Customer Reconfiguration Establishment						2.78		3.32							
	DS1 DCS Termination with DS0 Switching					23.35	41.14	34.25	29.94	24.08						
	DS1 DCS Termination with DS1 Switching					13.45	27.79	20.90	21.99	16.12						
	DS3 DCS Termination with DS1 Switching					150.88	41.14	34.25	29.94	24.08						
Node (SynchroNet)																
	Node per month			UNCDX	UNCNT	17.11										
Service Rearrangements																
	NRC - Change in Facility Assignment per circuit Service Rearrangement	I		U1TVX, U1TDX, U1TUC, U1TUD, U1TUB, ULDVX, ULDDX, UNCVX, UNCDX, UNC1X	URETD		130.47	40.11								
	NRC - Change in Facility Assignment per circuit Project Management (added to CFA per circuit if project managed)	I		U1TVX, U1TDX, U1TUC, U1TUD, U1TUB, ULDVX, ULDDX, UNCVX, UNCDX, UNC1X	URETB		3.44	3.44								
	NRC - Order Coordination Specific Time - Dedicated Transport	I		UNC1X, UNC3X	OCOSR		18.93	18.93								
COMMINGLING																
	Commingling Authorization			UNCVX, UNCDX, UNC1X, UNC3X, UNCSX, U1TD1, U1TD3, U1TS1, UE3, UDLSX, U1TVX, U1TDX, U1TUB, ULDVX, ULDD1, ULDD3, ULDS1	CMGAU	0.00	0.00	0.00	0.00	0.00						
Commingled (UNE part of single bandwidth circuit)																
	Commingled VG COCI			XDV2X	1D1VG	1.82	5.70	4.42								
	Commingled Digital COCI			XDV6X	1D1DD	0.91	5.70	4.42								
	Commingled ISDN COCI			XDD4X	UC1CA	17.58	5.70	4.42								
	Commingled 2-wire VG Interoffice Channel Facility Termination			XDV2X	U1TV2	18.58	79.83	44.08	69.32	31.00						
	Commingled 4-wire VG Interoffice Channel Facility Termination			XDV6X	U1TV4	24.09	79.83	44.08	69.32	31.00						
	Commingled 56kbps Interoffice Channel Facility Termination			XDD4X	U1TD5	17.98	79.83	44.08	69.32	31.00						
	Commingled 64kbps Interoffice Channel Facility Termination			XDD4X	U1TD6	17.98	79.83	44.08	69.32	31.00						
	Commingled VG/DS0 Interoffice Channel per mile			XDV2X, XDV6X, XDD4X	1L5XX	0.0174										
	Commingled 2-wire Local Loop Zone 1		1	XDV2X	UEAL2	14.74	108.76	35.47	72.94	10.86						
	Commingled 2-wire Local Loop Zone 2		2	XDV2X	UEAL2	22.08	108.76	35.47	72.94	10.86						
	Commingled 2-wire Local Loop Zone 3		3	XDV2X	UEAL2	36.87	108.76	35.47	72.94	10.86						
	Commingled 4-wire Local Loop Zone 1		1	XDV6X	UEAL4	21.98	108.76	35.47	72.94	10.86						
	Commingled 4-wire Local Loop Zone 2		2	XDV6X	UEAL4	32.93	108.76	35.47	72.94	10.86						
	Commingled 4-wire Local Loop Zone 3		3	XDV6X	UEAL4	54.99	108.76	35.47	72.94	10.86						
	Commingled 56kbps Local Loop Zone 1		1	XDD4X	UDL56	27.68	108.76	35.47	72.94	10.86						
	Commingled 56kbps Local Loop Zone 2		2	XDD4X	UDL56	41.47	108.76	35.47	72.94	10.86						
	Commingled 56kbps Local Loop Zone 3		3	XDD4X	UDL56	69.24	108.76	35.47	72.94	10.86						
	Commingled 64kbps Local Loop Zone 1		1	XDD4X	UDL64	27.68	108.76	35.47	72.94	10.86						
	Commingled 64kbps Local Loop Zone 2		2	XDD4X	UDL64	41.47	108.76	35.47	72.94	10.86						
	Commingled 64kbps Local Loop Zone 3		3	XDD4X	UDL64	69.24	108.76	35.47	72.94	10.86						
	Commingled ISDN Local Loop Zone 1		1	XDD4X	U1L2X	19.77	108.76	35.47	72.94	10.86						
	Commingled ISDN Local Loop Zone 2		2	XDD4X	U1L2X	29.63	108.76	35.47	72.94	10.86						
	Commingled ISDN Local Loop Zone 3		3	XDD4X	U1L2X	49.47	108.76	35.47	72.94	10.86						

UNBUNDLED NETWORK ELEMENTS - Tennessee																	Att: 2 Exh: A
CATEGORY		RATE ELEMENTS	Interim	Zone	BCS	USOC	RATES($)					Svc Order Submitted Elec per LSR	Svc Order Submitted Manually per LSR	Incremental Charge - Manual Svc Order vs. Electronic-1st	Incremental Charge - Manual Svc Order vs. Electronic-Add'l	Incremental Charge - Manual Svc Order vs. Electronic-Disc 1st	Incremental Charge - Manual Svc Order vs. Electronic-Disc Add'l
							Rec	Nonrecurring		Nonrecurring Disconnect		OSS Rates($)					
								First	Add'l	First	Add'l	SOMEC	SOMAN	SOMAN	SOMAN	SOMAN	SOMAN
		Commingled DS1 COCI			XDH1X	UC1D1	17.58	5.70	4.42								
		Commingled DS1 Interoffice Channel Facility Termination			XDH1X	U1TF1	77.86	171.24	113.12	70.07	30.90						
		Commingled DS1 Interoffice Channel per mile			XDH1X	1L5XX	0.3562										
		Commingled DS1/DS0 channelSystem			XDH1X	MQ1	80.77	105.76	14.48	3.04	2.74						
		Commingled DS1 Local Loop Zone 1		1	XDH1X	USLXX	51.38	228.40	161.74	79.87	24.88						
		Commingled DS1 Local Loop Zone 2		2	XDH1X	USLXX	76.98	228.40	161.74	79.87	24.88						
		Commingled DS1 Local Loop Zone 3		3	XDH1X	USLXX	128.54	228.40	161.74	79.87	24.88						
		Commingled DS3 Local Loop Facility Termination			HFQC6	UE3PX	374.24	1,260.47	628.84	106.78	45.24						
		Commingled DS3/STS-1 Local Loop per mile			HFQC6, HFRST	1L5ND	9.19										
		Commingled STS-1 Local Loop Facility Termination			HFRST	UDLS1	389.35	1,260.47	628.84	79.87	24.88						
		Commingled DS3/DS1 channelSystem			HFQC6	MQ3	222.98	156.02	49.41	17.12	6.77						
		Commingled DS3 Interoffice Channel Facility Termination			HFQC6	U1TF3	848.99	482.01	153.81	64.43	35.43						
		Commingled DS3 Interoffice Channel per mile			HFQC6	1L5XX	2.34										
		Commingled STS-1Interoffice Channel Facility Termination			HFRST	U1TFS	849.30	482.01	153.81	64.43	35.43						
		Commingled STS-1Interoffice Channel per mile			HFRST	1L5XX	2.34										
		Commingled Dark Fiber - Interoffice Transport, Per Four Fiber Strands, Per Route Mile Or Fraction Thereof			HEQDL	1L5DF	28.74										
		Commingled Dark Fiber - Interoffice Transport, Per Four Fiber Strands, Per Route Mile Or Fraction Thereof			HEQDL	UDF14		1,121.00	153.19	580.26	357.17						
		UNE to Commingled Conversion Tracking			XDH1X, HFQC6	CMGUN	0.00	0.00	0.00	0.00	0.00						
		SPA to Commingled Conversion Tracking			XDH1X, HFQC6	CMGSP	0.00	0.00	0.00	0.00	0.00						
LNP Query Service																	
		LNP Charge Per query					0.0009277										
		LNP Service Establishment Manual						23.60	13.83	23.60	12.71						
		LNP Service Provisioning with Point Code Establishment						1,119.00	571.71	1,119.00	571.71						
911 PBX LOCATE																	
	911 PBX LOCATE DATABASE CAPABILITY																
		Service Establishment per CLEC per End User Account			9PBDC	9PBEU		1,706.00									
		Changes to TN Range or Customer Profile			9PBDC	9PBTN		170.69									
		Per Telephone Number (Monthly)			9PBDC	9PBMM	0.07										
		Change Company (Service Provider) ID			9PBDC	9PBPC		501.06									
		PBX Locate Service Support per CLEC (Monthlt)			9PBDC	9PBMR	191.92										
		Service Order Charge			9PBDC	9PBSC		23.20									
	911 PBX LOCATE TRANSPORT COMPONENT																
	See Att 3																
	Note: Rates displaying an "I" in Interim column are interim as a result of a Commission order.																

LOCAL INTERCONNECTION - South Carolina														Att: 3 Exh: A			
CATEGORY	RATE ELEMENTS	Interim	Zone	BCS	USOC	RATES($)					Svc Order Submitted Elec per LSR	Svc Order Submitted Manually per LSR	Incremental Charge - Manual Svc Order vs. Electronic-1st	Incremental Charge - Manual Svc Order vs. Electronic-Add'l	Incremental Charge - Manual Svc Order vs. Electronic-Disc 1st	Incremental Charge - Manual Svc Order vs. Electronic-Disc Add'l
						Rec	Nonrecurring		Nonrecurring Disconnect		OSS Rates($)					
							First	Add'l	First	Add'l	SOMEC	SOMAN	SOMAN	SOMAN	SOMAN	SOMAN
LOCAL INTERCONNECTION (CALL TRANSPORT AND TERMINATION)																
	NOTE: "bk" beside a rate indicates that the Parties have agreed to bill and keep for that element pursuant to the terms and conditions in Attachment 3.															
	TANDEM SWITCHING															
	Tandem Switching Function Per MOU					0.0007360bk										
	Multiple Tandem Switching, per MOU (applies to intial tandem only)					0.000736										
	Tandem Intermediary Charge, per MOU*					0.0025										
	* This charge is applicable only to transit traffic and is applied in addition to applicable switching and/or interconnection charges.															
	TRUNK CHARGE															
	Installation Trunk Side Service - per DS0			OHD	TPP6X		21.65	8.16								
	Installation Trunk Side Service - per DS0			OHD	TPP9X		21.65	8.16								
	Dedicated End Office Trunk Port Service-per DS0**			OHD	TDEOP	0.00										
	Dedicated End Office Trunk Port Service-per DS1**			OH1 OH1MS	TDE1P	0.00										
	Dedicated Tandem Trunk Port Service-per DS0**			OHD	TDWOP	0.00										
	Dedicated Tandem Trunk Port Service-per DS1**			OH1 OH1MS	TDW1P	0.00										
	** This rate element is recovered on a per MOU basis and is included in the End Office Switching and Tandem Switching, per MOU rate elements															
	COMMON TRANSPORT (Shared)															
	Common Transport - Per Mile, Per MOU					0.0000045bk										
	Common Transport - Facilities Termination Per MOU					0.0004095bk										
LOCAL INTERCONNECTION (DEDICATED TRANSPORT)																
	INTEROFFICE CHANNEL - DEDICATED TRANSPORT															
	Interoffice Channel - Dedicated Transport - 2-Wire Voice Grade - Per Mile per month			OHM	1L5NF	0.0167										
	Interoffice Channel - Dedicated Transport- 2- Wire Voice Grade - Facility Termination per month			OHM	1L5NF	24.30	40.63	27.47	16.77	6.91						
	Interoffice Channel - Dedicated Transport - 56 kbps - per mile per month			OHM	1L5NK	0.0167										
	Interoffice Channel - Dedicated Transport - 56 kbps - Facility Termination per month			OHM	1L5NK	16.76	40.63	27.47	16.77	6.91						
	Interoffice Channel - Dedicated Transport - 64 kbps - per mile per month			OHM	1L5NK	0.0167										
	Interoffice Channel - Dedicated Transport - 64 kbps - Facility Termination per month			OHM	1L5NK	16.76	40.63	27.47	16.77	6.91						
	Interoffice Channel - Dedicated Channel - DS1 - Per Mile per month			OH1, OH1MS	1L5NL	0.3415										
	Interoffice Channel - Dedicated Tranport - DS1 - Facility Termination per month			OH1, OH1MS	1L5NL	77.14	89.47	81.99	16.39	14.48						
	Interoffice Channel - Dedicated Transport - DS3 - Per Mile per month			OH3, OH3MS	1L5NM	8.02										
	Interoffice Channel - Dedicated Transport - DS3 - Facility Termination per month			OH3, OH3MS	1L5NM	880.65	279.37	163.12	60.33	58.59						
	LOCAL CHANNEL - DEDICATED TRANSPORT															
	Local Channel - Dedicated - 2-Wire Voice Grade per month			OHM	TEFV2	15.33	193.53	33.24	36.72	3.21						
	Local Channel - Dedicated - 4-Wire Voice Grade per month			OHM	TEFV4	16.54	193.97	33.68	37.19	3.68						
	Local Channel - Dedicated - DS1 per month			OH1	TEFHG	42.62	177.87	154.06	22.24	15.30						
	Local Channel - Dedicated - DS3 Facility Termination per month			OH3	TEFHJ	446.00	452.52	264.53	119.75	83.77						
	LOCAL INTERCONNECTION MID-SPAN MEET															
	Local Channel - Dedicated - DS1 per month			OH1MS	TEFHG	0.00	0.00									
	Local Channel - Dedicated - DS3 per month			OH3MS	TEFHJ	0.00	0.00									
	MULTIPLEXERS															
	Channelization - DS1 to DS0 Channel System			OH1, OH1MS	SATN1	107.57	91.24	62.71	10.56	9.81						
	DS3 to DS1 Channel System per month			OH3, OH3MS	SATNS	144.02	178.54	94.18	33.33	31.90						
	DS3 Interface Unit (DS1 COCI) per month			OH1, OH1MS	SATCO	8.64	6.59	4.73								
	Notes: If no rate is identified in the contract, the rates, terms, and conditions for the specific service or function will be as set forth in applicable BellSouth tariff.															
SIGNALING (CCS7)																
	NOTE:"bk" beside a rate indicates that the parties have agreed to bill and keep for that element pursuant to the terms and conditions in Attachment 3.															
	CCS7 Signaling Connection, Per 56Kbps Facility A-Link DS1			UDB	TPP6A	16.93	35.61	35.61	16.48	16.48						
	CCS7 Signaling Connection, Per 56Kbps Facility A-Link DS3			UDB	TPP9A	16.93	35.61	35.61	16.48	16.48						
	CCS7 Signaling Connection, Per 56Kbps Facility B-Link DS1			UDB	TPP6B	16.93	35.61	35.61	16.48	16.48						
	CCS7 Signaling Connection, Per 56Kbps Facility B-Link DS3			UDB	TPP9B	16.93	35.61	35.61	16.48	16.48						
	CCS7 Signaling Termination, Per STP Port			UDB	PT8SX	163.49										
	CCS7 Signaling Usage, Per TCAP Message					0.0000692										

LOCAL INTERCONNECTION - South Carolina														Att: 3 Exh: A			
CATEGORY		RATE ELEMENTS	Interim	Zone	BCS	USOC	RATES($)					Svc Order Submitted Elec per LSR	Svc Order Submitted Manually per LSR	Incremental Charge - Manual Svc Order vs. Electronic-1st	Incremental Charge - Manual Svc Order vs. Electronic-Add'l	Incremental Charge - Manual Svc Order vs. Electronic-Disc 1st	Incremental Charge - Manual Svc Order vs. Electronic-Disc Add'l
							Rec	Nonrecurring		Nonrecurring Disconnect		OSS Rates($)					
								First	Add'l	First	Add'l	SOMEC	SOMAN	SOMAN	SOMAN	SOMAN	SOMAN
		CCS7 Signaling Usage, Per ISUP Message					0.0000173bk										
		CCS7 Signaling Usage Surrogate, per link per LATA			UDB	STU56	791.37bk										
		CCS7 Signaling Point Code, per Originating Point Code Establishment or Change, per STP affected			UDB	CCAPO		29.08	29.08	35.65	35.65						
		CCS7 Signaling Point Code, per Destination Point Code Establishment or Change, Per Stp Affected			UDB	CCAPD		29.08	29.08	35.65	35.65						
		CCS7 Signaling Connection, Switched access service, interface groups, transmissiom paths 6 DS1 level path with bit stream signaling			UDB	TPP6X	16.93	35.61	35.61	16.48	16.48						
		CCS7 Signaling Connection, Switched access service, interface groups, transmissiom paths 9 DS3 level path with bit stream signaling			UDB	TPP9X	16.93	35.61	35.61	16.48	16.48						

LOCAL INTERCONNECTION - Tennessee														Att: 3 Exh: A			
CATEGORY	RATE ELEMENTS	Interim	Zone	BCS	USOC	RATES($)					Svc Order Submitted Elec per LSR	Svc Order Submitted Manually per LSR	Incremental Charge - Manual Svc Order vs. Electronic-1st	Incremental Charge - Manual Svc Order vs. Electronic-Add'l	Incremental Charge - Manual Svc Order vs. Electronic-Disc 1st	Incremental Charge - Manual Svc Order vs. Electronic-Disc Add'l
						Rec	Nonrecurring		Nonrecurring Disconnect		OSS Rates($)					
							First	Add'l	First	Add'l	SOMEC	SOMAN	SOMAN	SOMAN	SOMAN	SOMAN
LOCAL INTERCONNECTION (CALL TRANSPORT AND TERMINATION)																
	NOTE: "bk" beside a rate indicates that the Parties have agreed to bill and keep for that element pursuant to the terms and conditions in Attachment 3.															
	TANDEM SWITCHING															
	Tandem Switching Function Per MOU					0.0009778bk										
	Multiple Tandem Switching, per MOU (applies to intial tandem only)					0.0009778										
	Tandem Intermediary Charge, per MOU*					0.0025										
	* This charge is applicable only to transit traffic and is applied in addition to applicable switching and/or interconnection charges.															
	TRUNK CHARGE															
	Installation Trunk Side Service - per DS0			OHD	TPP6X		21.59	8.09								
	Installation Trunk Side Service - per DS0			OHD	TPP9X		21.59	8.09								
	Dedicated End Office Trunk Port Service-per DS0**			OHD	TDEOP	0.00										
	Dedicated End Office Trunk Port Service-per DS1**			OH1 OH1MS	TDE1P	0.00										
	Dedicated Tandem Trunk Port Service-per DS0**			OHD	TDWOP	0.00										
	Dedicated Tandem Trunk Port Service-per DS1**			OH1 OH1MS	TDW1P	0.00										
	** This rate element is recovered on a per MOU basis and is included in the End Office Switching and Tandem Switching, per MOU rate elements															
	COMMON TRANSPORT (Shared)															
	Common Transport - Per Mile, Per MOU					0.0000064bk										
	Common Transport - Facilities Termination Per MOU					0.0003871bk										
LOCAL INTERCONNECTION (DEDICATED TRANSPORT)																
	INTEROFFICE CHANNEL - DEDICATED TRANSPORT															
	Interoffice Channel - Dedicated Transport - 2-Wire Voice Grade - Per Mile per month			OHM	1L5NF	0.0174										
	Interoffice Channel - Dedicated Transport- 2- Wire Voice Grade - Facility Termination per month			OHM	1L5NF	18.58	55.39	17.37	27.96	3.51						
	Interoffice Channel - Dedicated Transport - 56 kbps - per mile per month			OHM	1L5NK	0.0174										
	Interoffice Channel - Dedicated Transport - 56 kbps - Facility Termination per month			OHM	1L5NK	17.98	55.39	17.37	27.96	3.51						
	Interoffice Channel - Dedicated Transport - 64 kbps - per mile per month			OHM	1L5NK	0.0174										
	Interoffice Channel - Dedicated Transport - 64 kbps - Facility Termination per month			OHM	1L5NK	17.98	55.39	17.37	27.96	3.51						
	Interoffice Channel - Dedicated Channel - DS1 - Per Mile per month			OH1, OH1MS	1L5NL	0.3562										
	Interoffice Channel - Dedicated Tranport - DS1 - Facility Termination per month			OH1, OH1MS	1L5NL	77.86	112.40	76.27	19.55	14.99						
	Interoffice Channel - Dedicated Transport - DS3 - Per Mile per month			OH3, OH3MS	1L5NM	2.34										
	Interoffice Channel - Dedicated Transport - DS3 - Facility Termination per month			OH3, OH3MS	1L5NM	848.99	395.29	176.56	109.04	105.91						
	LOCAL CHANNEL - DEDICATED TRANSPORT															
	Local Channel - Dedicated - 2-Wire Voice Grade per month			OHM	TEFV2	15.29	199.33	24.16	54.81	4.80						
	Local Channel - Dedicated - 4-Wire Voice Grade per month			OHM	TEFV4	16.18	201.53	24.83	55.52	5.51						
	Local Channel - Dedicated - DS1 per month			OH1	TEFHG	32.25	277.35	233.26	33.18	22.30						
	Local Channel - Dedicated - DS3 Facility Termination per month			OH3	TEFHJ	611.30	595.37	304.50	215.82	151.15						
	LOCAL INTERCONNECTION MID-SPAN MEET															
	Local Channel - Dedicated - DS1 per month			OH1MS	TEFHG	0.00	0.00									
	Local Channel - Dedicated - DS3 per month			OH3MS	TEFHJ	0.00	0.00									
	MULTIPLEXERS															
	Channelization - DS1 to DS0 Channel System			OH1, OH1MS	SATN1	80.77	141.87	77.11	14.51	13.46						
	DS3 to DS1 Channel System per month			OH3, OH3MS	SATNS	222.98	308.03	108.47	44.47	42.62						
	DS3 Interface Unit (DS1 COCI) per month			OH1, OH1MS	SATCO	17.58	6.07	4.66								
	Notes: If no rate is identified in the contract, the rates, terms, and conditions for the specific service or function will be as set forth in applicable BellSouth tariff.															
SIGNALING (CCS7)																
	NOTE:"bk" beside a rate indicates that the parties have agreed to bill and keep for that element pursuant to the terms and conditions in Attachment 3.															
	CCS7 Signaling Termination, Per STP Port			UDB	PT8SX	138.41										
	CCS7 Signaling Usage, Per TCAP Message					0.0000916										
	CCS7 Signaling Connection, Per DS1 level link (A link)			UDB	TPP6A	17.84	130.84	130.84					20.35	0.00	0.00	0.00
	CCS7 Signaling Connection, Per DS3 level link (A link)			UDB	TPP9A	17.84	130.84	130.84					20.35	0.00	0.00	0.00
	CCS7 Signaling Connection, Per DS1 level link (B link) (also known as D link)			UDB	TPP6B	17.84	130.84	130.84					20.35	0.00	0.00	0.00

LOCAL INTERCONNECTION - Tennessee

Att: 3 Exh: A

CATEGORY		RATE ELEMENTS	Interim	Zone	BCS	USOC	RATES($)					Svc Order Submitted Elec per LSR	Svc Order Submitted Manually per LSR	Incremental Charge - Manual Svc Order vs. Electronic-1st	Incremental Charge - Manual Svc Order vs. Electronic-Add'l	Incremental Charge - Manual Svc Order vs. Electronic-Disc 1st	Incremental Charge - Manual Svc Order vs. Electronic-Disc Add'l
							Rec	Nonrecurring		Nonrecurring Disconnect		OSS Rates($)					
								First	Add'l	First	Add'l	SOMEC	SOMAN	SOMAN	SOMAN	SOMAN	SOMAN
		CCS7 Signaling Connection, Per DS3 level link (B link) (also known as D link)			UDB	TPP9B	17.84	130.84	130.84					20.35	0.00	0.00	0.00
		CCS7 Signaling Usage, Per ISUP Message					0.0000373bk										
		CCS7 Signaling Usage Surrogate, per link per LATA			UDB	STU56	352.3bk										
		Signaling Point Code, per Originating Point Code Establishment or Change, per STP			UDB	CCAPO		121.77	121.77					20.35	0.00	0.00	0.00
		CCS7 Signaling Connection, Switched access service, interface groups, transmissiom paths 6 DS1 level path with bit stream signaling			UDB	TPP6X	17.84	130.84	130.84					20.35	0.00	0.00	0.00
		CCS7 Signaling Connection, Switched access service, interface groups, transmissiom paths 9 DS3 level path with bit stream signaling			UDB	TPP9X	17.84	130.84	130.84					20.35	0.00	0.00	0.00

COLLOCATION - South Carolina — Att: 4 Exh: B

CATEGORY	RATE ELEMENTS	Interim	Zone	BCS	USOC	RATES($) Rec	Nonrecurring First	Nonrecurring Add'l	Nonrecurring Disconnect First	Nonrecurring Disconnect Add'l	Svc Order Submitted Elec per LSR	Svc Order Submitted Manually per LSR	Incremental Charge - Manual Svc Order vs. Electronic-1st	Incremental Charge - Manual Svc Order vs. Electronic-Add'l	Incremental Charge - Manual Svc Order vs. Electronic-Disc 1st	Incremental Charge - Manual Svc Order vs. Electronic-Disc Add'l
											OSS Rates($)					
							First	Add'l	First	Add'l	SOMEC	SOMAN	SOMAN	SOMAN	SOMAN	SOMAN
PHYSICAL COLLOCATION																
Application																
	Physical Collocation - Initial Application Fee			CLO	PE1BA		1,883.67		0.51							
	Physical Collocation - Subsequent Application Fee			CLO	PE1CA		1,570.10		0.51							
	Physical Collocation - Co-Carrier Cross Connects/Direct Connect, Application Fee, per application			CLO	PE1DT		584.42									
	Physical Collocation Administrative Only - Application Fee			CLO	PE1BL		743.66									
	Physical Collocation - Application Cost, Simple Augment			CLO	PE1KS		594.27		1.21							
	Physical Collocation - Application Cost, Minor Augment			CLO	PE1KM		833.26		1.21							
	Physical Collocation - Application Cost, Intermediate Augment			CLO	PE1K1		1,058.00		1.21							
	Physical Collocation - Application Cost - Major Augment			CLO	PE1KJ		2,409.00		1.21							
Space Preparation																
	Physical Collocation - Floor Space, per sq feet			CLO	PE1PJ	3.95										
	Physical Collocation - Space Enclosure, welded wire, first 50 square feet			CLO	PE1BX	197.69										
	Physical Collocation - Space enclosure, welded wire, first 100 square feet			CLO	PE1BW	219.19										
	Physical Collocation - Space enclosure, welded wire, each additional 50 square feet			CLO	PE1CW	21.50										
	Physical Collocation - Space Preparation - C.O. Modification per square ft.			CLO	PE1SK	2.75										
	Physical Collocation - Space Preparation, Common Systems Modifications-Cageless, per square foot			CLO	PE1SL	3.24										
	Physical Collocation - Space Preparation - Common Systems Modifications-Caged, per cage			CLO	PE1SM	110.16										
	Physical Collocation - Space Preparation - Firm Order Processing			CLO	PE1SJ		602.05									
	Physical Collocation - Space Availability Report, per Central Office Requested			CLO	PE1SR		1,077.57									
Power																
	Physical Collocation - Power, -48V DC Power - per Fused Amp Requested			CLO	PE1PL	9.19										
	Physical Collocation - Power, 120V AC Power, Single Phase, per Breaker Amp			CLO	PE1FB	5.67										
	Physical Collocation - Power, 240V AC Power, Single Phase, per Breaker Amp			CLO	PE1FD	11.36										
	Physical Collocation - Power, 120V AC Power, Three Phase, per Breaker Amp			CLO	PE1FE	17.03										
	Physical Collocation - Power, 277V AC Power, Three Phase, per Breaker Amp			CLO	PE1FG	39.33										
Cross Connects (Cross Connects, Co-Carrier Cross Connects, and Ports)																
	Physical Collocation - 2-wire cross-connect, loop, provisioning			UEANL,UEQ, UNCNX, UEA, UCL, UAL, UHL, UDN, UNCVX	PE1P2	0.0341	12.32	11.83	6.04	5.45						
	Physical Collocation - 4-wire cross-connect, loop, provisioning			UEA, UHL, UNCVX, UNCDX, UCL, UDL	PE1P4	0.0682	12.42	11.90	6.40	5.74						
	Physical Collocation -DS1 Cross-Connect for Physical Collocation, provisioning			WDS1L, WDS1S, UXTD1, ULDD1, USLEL, UNLD1, U1TD1, UNC1X, UEPSR, UEPSB, UEPSE, UEPSP, USL, UEPEX, UEPDX	PE1P1	1.12	22.08	15.96	6.42	5.80						
	Physical Collocation - DS3 Cross-Connect, provisioning			UE3, U1TD3, UXTD3, UXTS1, UNC3X, UNCSX, ULDD3, U1TS1, ULDS1, UNLD3, UEPEX, UEPDX, UEPSR, UEPSB, UEPSE, UEPSP	PE1P3	14.21	20.94	15.23	7.39	5.93						

COLLOCATION - South Carolina														Att: 4 Exh: B			
CATEGORY		RATE ELEMENTS	Interim	Zone	BCS	USOC	RATES($)					Svc Order Submitted Elec per LSR	Svc Order Submitted Manually per LSR	Incremental Charge - Manual Svc Order vs. Electronic-1st	Incremental Charge - Manual Svc Order vs. Electronic-Add'l	Incremental Charge - Manual Svc Order vs. Electronic-Disc 1st	Incremental Charge - Manual Svc Order vs. Electronic-Disc Add'l
							Rec	Nonrecurring		Nonrecurring Disconnect		OSS Rates($)					
								First	Add'l	First	Add'l	SOMEC	SOMAN	SOMAN	SOMAN	SOMAN	SOMAN
		Physical Collocation - 2-Fiber Cross-Connect			CLO, ULDO3, ULD12, ULD48, U1TO3, U1T12, U1T48, UDLO3, UDL12, UDF	PE1F2	2.82	20.94	15.23	7.40	5.93						
		Physical Collocation - 4-Fiber Cross-Connect			ULDO3, ULD12, ULD48, U1TO3, U1T12, U1T48, UDLO3, UDL12, UDF, UDFCX	PE1F4	5.01	25.61	19.90	9.73	8.26						
		Physical Collocation - Co-Carrier Cross Connects/Direct Connect - Fiber Cable Support Structure, per linear foot, per cable.			CLO	PE1ES	0.001										
		Physical Collocation - Co-Carrier Cross Connect/Direct Connect - Copper/Coax Cable Support Structure, per linear foot, per cable.			CLO	PE1DS	0.0015										
		Physical Collocation 2-Wire Cross Connect, Port			UEPSR, UEPSP, UEPSE, UEPSB, UEPSX, UEP2C	PE1R2	0.0341	12.32	11.83	6.04	5.45		15.69				
		Physical Collocation 4-Wire Cross Connect, Port			UEPEX, UEPDD	PE1R4	0.0682	12.42	11.90	6.40	5.74		15.69				
	Security																
		Physical Collocation - Security Escort for Basic Time - normally scheduled work, per half hour			CLO	PE1BT		16.96	10.75								
		Physical Collocation - Security Escort for Overtime - outside of normally scheduled working hours on a scheduled work day, per half hour			CLO	PE1OT		22.10	13.89								
		Physical Collocation - Security Escort for Premium Time - outside of scheduled work day, per half hour			CLO	PE1PT		27.23	17.02								
		Physical Collocation - Security Access System, Security System, per Central Office			CLO	PE1AX	74.72										
		Physical Collocation -Security Access System - New Card Activation, per Card Activation (First), per State			CLO	PE1A1	0.0601	27.85									
		Physical Collocation-Security Access System-Administrative Change, existing Access Card, per Request, per State, per Card			CLO	PE1AA		7.81									
		Physical Collocation - Security Access System - Replace Lost or Stolen Card, per Card			CLO	PE1AR		22.83									
		Physical Collocation - Security Access - Initial Key, per Key			CLO	PE1AK		13.13									
		Physical Collocation - Security Access - Key, Replace Lost or Stolen Key, per Key			CLO	PE1AL		13.13									
	CFA																
		Physical Collocation - CFA Information Resend Request, per premises, per arrangement, per request			CLO	PE1C9		77.71									
	Cable Records - Note: The rates in the First & Additional columns will actually be billed as "Initial I" and "Subsequent S" respectively																
		Physical Collocation - Cable Records, per request			CLO	PE1CR		I 760.98	S 489.20	133.29							
		Physical Collocation, Cable Records, VG/DS0 Cable, per cable record (maximum 3600 records)			CLO	PE1CD		327.65		189.54							
		Physical Collocation, Cable Records, VG/DS0 Cable, per each 100 pair			CLO	PE1CO		4.82		5.91							
		Physical Collocation, Cable Records, DS1, per T1 TIE			CLO	PE1C1		2.26		2.77							
		Physical Collocation, Cable Records, DS3, per T3 TIE			CLO	PE1C3		7.90		9.68							
		Physical Collocation - Cable Records, Fiber Cable, per cable record (maximum 99 records)			CLO	PE1CB		84.68		77.30							
		Physical Collocation, Cable Records,CAT5/RJ45			CLO	PE1C5		2.26		2.77							
	Virtual to Physical																
		Physical Collocation - Virtual to Physical Collocation Relocation, per Voice Grade Circuit			CLO	PE1BV		33.00									
		Physical Collocation - Virtual to Physical Collocation Relocation, per DSO Circuit			CLO	PE1BO		33.00									
		Physical Collocation - Virtual to Physical Collocation Relocation, per DS1 Circuit			CLO	PE1B1		52.00									
		Physical Collocation - Virtual to Physical Collocation Relocation, per DS3 Circuit			CLO	PE1B3		52.00									

COLLOCATION - South Carolina														Att: 4 Exh: B			
CATEGORY		RATE ELEMENTS	Interim	Zone	BCS	USOC	RATES($)					Svc Order Submitted Elec per LSR	Svc Order Submitted Manually per LSR	Incremental Charge - Manual Svc Order vs. Electronic-1st	Incremental Charge - Manual Svc Order vs. Electronic-Add'l	Incremental Charge - Manual Svc Order vs. Electronic-Disc 1st	Incremental Charge - Manual Svc Order vs. Electronic-Disc Add'l
							Rec	Nonrecurring		Nonrecurring Disconnect		OSS Rates($)					
								First	Add'l	First	Add'l	SOMEC	SOMAN	SOMAN	SOMAN	SOMAN	SOMAN
		Physical Collocation - Virtual to Physical Collocation In-Place, Per Voice Grade Circuit			CLO	PE1BR		22.43									
		Physical Collocation Virtual to Physical Collocation In-Place, Per DSO Circuit			CLO	PE1BP		22.43									
		Physical Collocation - Virtual to Physical Collocation In-Place, Per DS1 Circuit			CLO	PE1BS		32.61									
		Physical Collocation - Virtual to Physical Collocation In-Place, per DS3 Circuit			CLO	PE1BE		32.61									
	Entrance Cable																
		Physical Collocation - Fiber Cable Installation, Pricing, non-recurring charge, per Entrance Cable			CLO	PE1BD		794.22		22.54							
		Physical Collocation - Fiber Cable Support Structure, per Entrance Cable			CLO	PE1PM	21.33										
		Physical Collocation - Fiber Entrance Cable Installation, per Fiber			CLO	PE1ED		3.87									
VIRTUAL COLLOCATION																	
	Application																
		Virtual Collocation - Application Fee			AMTFS	EAF		1,207.95		0.51							
		Virtual Collocation - Co-Carrier Cross Connects/Direct Connect, Application Fee, per application			AMTFS	VE1CA		584.42									
		Virtual Collocation Administrative Only - Application Fee			AMTFS	VE1AF		743.66									
	Space Preparation																
		Virtual Collocation - Floor Space, per sq. ft.			AMTFS	ESPVX	3.95										
	Power																
		Virtual Collocation - Power, per fused amp			AMTFS	ESPAX	9.19										
	Cross Connects (Cross Connects, Co-Carrier Cross Connects, and Ports)																
		Virtual Collocation - 2-wire cross-connect, loop, provisioning			UEANL, UEA, UDN, UAL, UHL, UCL, UEQ, UNCVX, UNCDX, UNCNX	UEAC2	0.0317	12.32	11.83	6.04	5.45						
		Virtual Collocation - 4-wire cross-connect, loop, provisioning			UEA, UHL, UCL, UDL, UNCVX, UNCDX	UEAC4	0.0634	12.42	11.90	6.40	5.74						
		Virtual collocation - Special Access & UNE,cross-connect per DS1			ULR, UXTD1, UNC1X, ULDD1, U1TD1, USLEL, UNLD1, USL, UEPEX, UEPDX	CNC1X	1.12	22.08	15.96	6.42	5.80						
		Virtual collocation - Special Access & UNE, cross-connect per DS3			USL, UE3, U1TD3, UXTS1, UXTD3, UNC3X, UNCSX, ULDD3, U1TS1, ULDS1, UDLSX, UNLD3, XDEST	CND3X	14.21	20.94	15.23	7.39	5.93						
		Virtual Collocation - 2-Fiber Cross Connects			UDL12, UDLO3, U1T48, U1T12, U1TO3, ULDO3, ULD12, ULD48, UDF	CNC2F	2.86	20.94	15.23	7.40	5.93						
		Virtual Collocation - 4-Fiber Cross Connects			UDL12, UDLO3, U1T48, U1T12, U1TO3, ULDO3, ULD12, ULD48, UDF	CNC4F	5.71	25.61	19.90	9.73	8.26						
		Virtual Collocation - Co-Carrier Cross Connects/Direct Connect - Fiber Cable Support Structure, per linear foot, per cable			AMTFS	VE1CB	0.001										
		Virtual Collocation - Co-Carrier Cross Connects/Direct Connect - Copper/Coax Cable Support Structure, per linear foot, per cable			AMTFS	VE1CD	0.0015										
		Virtual Collocation 2-Wire Cross Connect, Port			UEPSX, UEPSB, UEPSE, UEPSP, UEPSR, UEP2C	VE1R2	0.0317	12.32	11.83	6.04	5.45						
		Virtual Collocation 4-Wire Cross Connect, Port			UEPDD, UEPEX	VE1R4	0.0634	12.42	11.90	6.40	5.74						

COLLOCATION - South Carolina														Att: 4 Exh: B			
CATEGORY	RATE ELEMENTS	Interim	Zone	BCS	USOC	RATES($)					Svc Order Submitted Elec per LSR	Svc Order Submitted Manually per LSR	Incremental Charge - Manual Svc Order vs. Electronic-1st	Incremental Charge - Manual Svc Order vs. Electronic-Add'l	Incremental Charge - Manual Svc Order vs. Electronic-Disc 1st	Incremental Charge - Manual Svc Order vs. Electronic-Disc Add'l
						Rec	Nonrecurring		Nonrecurring Disconnect		OSS Rates($)					
							First	Add'l	First	Add'l	SOMEC	SOMAN	SOMAN	SOMAN	SOMAN	SOMAN
CFA																
	Virtual Collocation - CFA Information Resend Request, per Premises, per Arrangement, per request			AMTFS	VE1QR		77.71									
Cable Records - Note: The rates in the First & Additional columns will actually be billed as "Initial I" & "Subsequent S" respectively																
	Virtual Collocation Cable Records - per request			AMTFS	VE1BA		I 760.98	S 489.20	133.29							
	Virtual Collocation Cable Records - VG/DS0 Cable, per cable record			AMTFS	VE1BB		327.65		189.54							
	Virtual Collocation Cable Records - VG/DS0 Cable, per each 100 pair			AMTFS	VE1BC		4.82		5.91							
	Virtual Collocation Cable Records - DS1, per T1TIE			AMTFS	VE1BD		2.26		2.77							
	Virtual Collocation Cable Records - DS3, per T3TIE			AMTFS	VE1BE		7.90		9.68							
	Virtual Collocation Cable Records - Fiber Cable, per 99 fiber records			AMTFS	VE1BF		84.68		77.30							
	Virtual Collocation Cable Records - CAT 5/RJ45			AMTFS	VE1B5		2.26		2.77							
Security																
	Virtual collocation - Security escort, basic time, normally scheduled work hours			AMTFS	SPTBX		16.96	10.75								
	Virtual collocation - Security escort, overtime, outside of normally scheduled work hours on a normal working day			AMTFS	SPTOX		22.10	13.89								
	Virtual collocation - Security escort, premium time, outside of a scheduled work day			AMTFS	SPTPX		27.23	17.02								
Maintenance																
	Virtual collocation - Maintenance in CO - Basic, per half hour			AMTFS	CTRLX		27.99	10.75								
	Virtual collocation - Maintenance in CO - Overtime, per half hour			AMTFS	SPTOM		36.56	13.89								
	Virtual collocation - Maintenance in CO - Premium per half hour			AMTFS	SPTPM		45.12	17.02								
Entrance Cable																
	Virtual Collocation - Cable Installation Charge, per cable			AMTFS	ESPCX		794.22		22.54							
	Virtual Collocation - Cable Support Structure, per cable			AMTFS	ESPSX	18.66										
COLLOCATION IN THE REMOTE SITE																
Physical Remote Site Collocation																
	Physical Collocation in the Remote Site - Application Fee			CLORS	PE1RA		308.38		168.60							
	Cabinet Space in the Remote Site per Bay/ Rack			CLORS	PE1RB	246.44										
	Physical Collocation in the Remote Site - Security Access - Key			CLORS	PE1RD		13.13									
	Physical Collocation in the Remote Site - Space Availability Report per Premises Requested			CLORS	PE1SR		116.13									
	Physical Collocation in the Remote Site - Remote Site CLLI Code Request, per CLLI Code Requested			CLORS	PE1RE		37.64									
	Remote Site DLEC Data (BRSDD), per Compact Disk, per CO			CLORS	PE1RR		234.50									
	Physical Collocation - Security Escort for Basic Time - normally scheduled work, per half hour			CLORS	PE1BT		16.96	10.75								
	Physical Collocation - Security Escort for Overtime - outside of normally scheduled working hours on a scheduled work day, per half hour			CLORS	PE1OT		22.10	13.89								
	Physical Collocation - Security Escort for Premium Time - outside of scheduled work day, per half hour			CLORS	PE1PT		27.23	17.02								
Adjacent Remote Site Collocation																
	Remote Site-Adjacent Collocation-Application Fee			CLORS	PE1RU		755.62	755.62								
	Remote Site-Adjacent Collocation - Real Estate, per square foot			CLORS	PE1RT	0.134										
	Remote Site-Adjacent Collocation - AC Power, per breaker amp			CLORS	PE1RS	6.27										
NOTE: If Security Escort and/or Add'l Engineering Fees become necessary for adjacent remote site collocation, the Parties will negotiate appropriate rates.																
Virtual Remote Site Collocation																
	Virtual Collocation in the Remote Site - Application Fee			VE1RS	VE1RB		616.76		337.19							
	Virtual Collocation in the Remote Site - Per Bay/Rack of Space			VE1RS	VE1RC	246.44										
	Virtual Collocation in the Remote Site - Space Availability Report per Premises requested			VE1RS	VE1RR		232.25									
	Virtual Collocation in the Remote Site - Remote Site CLLI Code Request, per CLLI Code Requested			VE1RS	VE1RL		75.27									
ADJACENT COLLOCATION																

COLLOCATION - South Carolina																	Att: 4 Exh: B
CATEGORY		RATE ELEMENTS	Interim	Zone	BCS	USOC	RATES($)					Svc Order Submitted Elec per LSR	Svc Order Submitted Manually per LSR	Incremental Charge - Manual Svc Order vs. Electronic-1st	Incremental Charge - Manual Svc Order vs. Electronic-Add'l	Incremental Charge - Manual Svc Order vs. Electronic-Disc 1st	Incremental Charge - Manual Svc Order vs. Electronic-Disc Add'l
							Rec	Nonrecurring		Nonrecurring Disconnect		OSS Rates($)					
								First	Add'l	First	Add'l	SOMEC	SOMAN	SOMAN	SOMAN	SOMAN	SOMAN
		Adjacent Collocation - Space Charge per Sq. Ft.			CLOAC	PE1JA	0.0939										
		Adjacent Collocation - Electrical Facility Charge per Linear Ft.			CLOAC	PE1JC	6.40										
		Adjacent Collocation - 2-Wire Cross-Connects			UEANL,UEQ,UEA,UCL, UAL, UHL, UDN	PE1JE	0.0264	12.32	11.83	6.04	5.45						
		Adjacent Collocation - 4-Wire Cross-Connects			UEA,UHL,UDL,UCL	PE1JF	0.0527	12.42	11.90	6.40	5.74						
		Adjacent Collocation - DS1 Cross-Connects			USL	PE1JG	1.03	22.08	15.96	6.42	5.80						
		Adjacent Collocation - DS3 Cross-Connects			UE3	PE1JH	14.00	20.94	15.23	7.39	5.93						
		Adjacent Collocation - 2-Fiber Cross-Connect			CLOAC	PE1JJ	2.37	20.94	15.23	7.40	5.93						
		Adjacent Collocation - 4-Fiber Cross-Connect			CLOAC	PE1JK	4.53	25.61	19.90	9.73	8.26						
		Adjacent Collocation - Application Fee			CLOAC	PE1JB		1,580.20									
		Adjacent Collocation - 120V, Single Phase Standby Power Rate per AC Breaker Amp			CLOAC	PE1JL	5.67										
		Adjacent Collocation - 240V, Single Phase Standby Power Rate per AC Breaker Amp			CLOAC	PE1JM	11.36										
		Adjacent Collocation - 120V, Three Phase Standby Power Rate per AC Breaker Amp			CLOAC	PE1JN	17.03										
		Adjacent Collocation - 277V, Three Phase Standby Power Rate per AC Breaker Amp			CLOAC	PE1JO	39.33										

COLLOCATION - Tennessee														Att: 4 Exh: B			
CATEGORY		RATE ELEMENTS	Interim	Zone	BCS	USOC	RATES($)					Svc Order Submitted Elec per LSR	Svc Order Submitted Manually per LSR	Incremental Charge - Manual Svc Order vs. Electronic-1st	Incremental Charge - Manual Svc Order vs. Electronic-Add'l	Incremental Charge - Manual Svc Order vs. Electronic-Disc 1st	Incremental Charge - Manual Svc Order vs. Electronic-Disc Add'l
							Rec	Nonrecurring		Nonrecurring Disconnect		OSS Rates($)					
								First	Add'l	First	Add'l	SOMEC	SOMAN	SOMAN	SOMAN	SOMAN	SOMAN
PHYSICAL COLLOCATION																	
	Application																
		Physical Collocation - Initial Application Fee			CLO	PE1BA		1,285.98									
		Physical Collocation - Subsequent Application Fee			CLO	PE1CA		1,085.48									
		Physical Collocation - Co-Carrier Cross Connects/Direct Connect, Application Fee, per application			CLO	PE1DT		585.09									
		Physical Collocation - Power Reconfiguration Only, Application Fee			CLO	PE1PR		400.10									
		Physical Collocation Administrative Only - Application Fee			CLO	PE1BL		743.25									
	Space Preparation																
		Physical Collocation - Floor Space, per sq feet			CLO	PE1PJ	5.94										
		Physical Collocation - Space Enclosure, welded wire, first 50 square feet			CLO	PE1BX	197.09										
		Physical Collocation - Space enclosure, welded wire, first 100 square feet			CLO	PE1BW	218.53										
		Physical Collocation - Space enclosure, welded wire, each additional 50 square feet			CLO	PE1CW	21.44										
		Physical Collocation - Space Preparation - C.O. Modification per square ft.			CLO	PE1SK	2.74										
		Physical Collocation - Space Preparation, Common Systems Modifications-Cageless, per square foot			CLO	PE1SL	2.95										
		Physical Collocation - Space Preparation - Common Systems Modifications-Caged, per cage			CLO	PE1SM	100.14										
		Physical Collocation - Space Preparation - Firm Order Processing			CLO	PE1SJ		1,204.00									
		Physical Collocation - Space Availability Report, per Central Office Requested	I		CLO	PE1SR		2,027.00									
	Power																
		Physical Collocation - Power, -48V DC Power - per Fused Amp Requested			CLO	PE1PL	8.87										
		Physical Collocation - Power, 120V AC Power, Single Phase, per Breaker Amp			CLO	PE1FB	5.60										
		Physical Collocation - Power, 240V AC Power, Single Phase, per Breaker Amp			CLO	PE1FD	11.22										
		Physical Collocation - Power, 120V AC Power, Three Phase, per Breaker Amp			CLO	PE1FE	16.82										
		Physical Collocation - Power, 277V AC Power, Three Phase, per Breaker Amp			CLO	PE1FG	38.84										
	Cross Connects (Cross Connects, Co-Carrier Cross Connects, and Ports)																
		Physical Collocation - 2-wire cross-connect, loop, provisioning			UEANL,UEQ, UNCNX, UEA, UCL, UAL, UHL, UDN, UNCVX	PE1P2	0.033	33.82	31.92								
		Physical Collocation - 4-wire cross-connect, loop, provisioning			UEA, UHL, UNCVX, UNCDX, UCL, UDL	PE1P4	0.066	33.94	31.95								
		Physical Collocation -DS1 Cross-Connect for Physical Collocation, provisioning			WDS1L, WDS1S, UXTD1, ULDD1, USLEL, UNLD1, U1TD1, UNC1X, UEPSR, UEPSB, UEPSE, UEPSP, USL, UEPEX, UEPDX	PE1P1	1.51	53.27	40.16								
		Physical Collocation - DS3 Cross-Connect, provisioning			UE3, U1TD3, UXTD3, UXTS1, UNC3X, UNCSX, ULDD3, U1TS1, ULDS1, UNLD3, UEPEX, UEPDX, UEPSR, UEPSB, UEPSE, UEPSP	PE1P3	19.26	52.37	38.89								

COLLOCATION - Tennessee														Att: 4 Exh: B			
CATEGORY		RATE ELEMENTS	Interim	Zone	BCS	USOC	RATES($)					Svc Order Submitted Elec per LSR	Svc Order Submitted Manually per LSR	Incremental Charge - Manual Svc Order vs. Electronic-1st	Incremental Charge - Manual Svc Order vs. Electronic-Add'l	Incremental Charge - Manual Svc Order vs. Electronic-Disc 1st	Incremental Charge - Manual Svc Order vs. Electronic-Disc Add'l
							Rec	Nonrecurring		Nonrecurring Disconnect		OSS Rates($)					
								First	Add'l	First	Add'l	SOMEC	SOMAN	SOMAN	SOMAN	SOMAN	SOMAN
		Physical Collocation - 2-Fiber Cross-Connect			CLO, ULDO3, ULD12, ULD48, U1TO3, U1T12, U1T48, UDLO3, UDL12, UDF	PE1F2	15.64	41.56	29.82	12.96	10.34			2.69	2.69	1.56	1.56
		Physical Collocation - 4-Fiber Cross-Connect			ULDO3, ULD12, ULD48, U1TO3, U1T12, U1T48, UDLO3, UDL12, UDF, UDFCX	PE1F4	28.11	50.53	38.78	16.97	14.35			2.69	2.69	1.56	1.56
		Physical Collocation - Co-Carrier Cross Connects/Direct Connect - Fiber Cable Support Structure, per linear foot, per cable.			CLO	PE1ES	0.0013										
		Physical Collocation - Co-Carrier Cross Connect/Direct Connect - Copper/Coax Cable Support Structure, per linear foot, per cable.			CLO	PE1DS	0.0019										
		Physical Collocation 2-Wire Cross Connect, Port			UEPSR, UEPSP, UEPSE, UEPSB, UEPSX, UEP2C	PE1R2	0.033	33.82	31.92					20.35	10.54	13.32	1.40
		Physical Collocation 4-Wire Cross Connect, Port			UEPEX, UEPDD	PE1R4	0.066	33.94	31.95					20.35	10.54	13.32	1.40
	Security																
		Physical Collocation - Security Escort for Basic Time - normally scheduled work, per half hour			CLO	PE1BT		33.91	21.49								
		Physical Collocation - Security Escort for Overtime - outside of normally scheduled working hours on a scheduled work day, per half hour			CLO	PE1OT		44.17	27.76								
		Physical Collocation - Security Escort for Premium Time - outside of scheduled work day, per half hour			CLO	PE1PT		54.42	34.02								
		Physical Collocation - Security Access System - Security System per Central Office			CLO	PE1AX	55.99										
		Physical Collocation -Security Access System - New Card Activation, per Card Activation (First), per State			CLO	PE1A1	0.059	55.67									
		Physical Collocation-Security Access System-Administrative Change, existing Access Card, per Request, per State, per Card			CLO	PE1AA		15.61									
		Physical Collocation - Security Access System - Replace Lost or Stolen Card, per Card			CLO	PE1AR		45.64									
		Physical Collocation - Security Access - Initial Key, per Key			CLO	PE1AK		26.24									
		Physical Collocation - Security Access - Key, Replace Lost or Stolen Key, per Key			CLO	PE1AL		26.24									
	CFA																
		Physical Collocation - CFA Information Resend Request, per premises, per arrangement, per request			CLO	PE1C9		77.67									
	Cable Records																
		Physical Collocation - Cable Records, per request			CLO	PE1CR		1,711.00									
		Physical Collocation, Cable Records, VG/DS0 Cable, per cable record (maximum 3600 records)			CLO	PE1CD		925.06									
		Physical Collocation, Cable Records, VG/DS0 Cable, per each 100 pair			CLO	PE1CO		18.05									
		Physical Collocation, Cable Records, DS1, per T1 TIE			CLO	PE1C1		8.45									
		Physical Collocation, Cable Records, DS3, per T3 TIE			CLO	PE1C3		29.57									
		Physical Collocation - Cable Records, Fiber Cable, per cable record (maximum 99 records)			CLO	PE1CB		279.42									
		Physical Collocation, Cable Records,CAT5/RJ45			CLO	PE1C5		8.45									
	Virtual to Physical																
		Physical Collocation - Virtual to Physical Collocation Relocation, per Voice Grade Circuit			CLO	PE1BV		33.00									
		Physical Collocation - Virtual to Physical Collocation Relocation, per DSO Circuit			CLO	PE1BO		33.00									
		Physical Collocation - Virtual to Physical Collocation Relocation, per DS1 Circuit			CLO	PE1B1		52.00									
		Physical Collocation - Virtual to Physical Collocation Relocation, per DS3 Circuit			CLO	PE1B3		52.00									

COLLOCATION - Tennessee														Att: 4 Exh: B			
CATEGORY		RATE ELEMENTS	Interim	Zone	BCS	USOC	RATES($)					Svc Order Submitted Elec per LSR	Svc Order Submitted Manually per LSR	Incremental Charge - Manual Svc Order vs. Electronic-1st	Incremental Charge - Manual Svc Order vs. Electronic-Add'l	Incremental Charge - Manual Svc Order vs. Electronic-Disc 1st	Incremental Charge - Manual Svc Order vs. Electronic-Disc Add'l
							Rec	Nonrecurring		Nonrecurring Disconnect		OSS Rates($)					
								First	Add'l	First	Add'l	SOMEC	SOMAN	SOMAN	SOMAN	SOMAN	SOMAN
		Physical Collocation - Virtual to Physical Collocation In-Place, Per Voice Grade Circuit			CLO	PE1BR		21.11									
		Physical Collocation Virtual to Physical Collocation In-Place, Per DSO Circuit			CLO	PE1BP		21.11									
		Physical Collocation - Virtual to Physical Collocation In-Place, Per DS1 Circuit			CLO	PE1BS		30.69									
		Physical Collocation - Virtual to Physical Collocation In-Place, per DS3 Circuit			CLO	PE1BE		30.69									
	Entrance Cable																
		Physical Collocation - Fiber Cable Support Structure, per Entrance Cable			CLO	PE1PM	19.80										
		Physical Collocation - Fiber Entrance Cable per Cable (CO manhole to vault splice)			CLO	PE1EC		1,071.00		43.10							
		Physical Collocation - Fiber Entrance Cable Installation, per Fiber			CLO	PE1ED		7.29									
VIRTUAL COLLOCATION																	
	Application																
		Virtual Collocation - Application Fee			AMTFS	EAF		2,633.00						2.07	2.81	0.67	1.41
		Virtual Collocation - Co-Carrier Cross Connects/Direct Connect, Application Fee, per application			AMTFS	VE1CA		585.09									
		Virtual Collocation Administrative Only - Application Fee			AMTFS	VE1AF		743.25									
	Space Preparation																
		Virtual Collocation - Floor Space, per sq. ft.			AMTFS	ESPVX	3.91										
	Power																
		Virtual Collocation - Power, per fused amp			AMTFS	ESPAX	6.79										
	Cross Connects (Cross Connects, Co-Carrier Cross Connects, and Ports)																
		Virtual Collocation - 2-wire cross-connect, loop, provisioning			UEANL, UEA, UDN, UAL, UHL, UCL, UEQ, UNCVX, UNCDX, UNCNX	UEAC2	0.57	11.62	9.90	10.38	8.66			2.07	2.81	0.67	1.41
		Virtual Collocation - 4-wire cross-connect, loop, provisioning			UEA, UHL, UCL, UDL, UNCVX, UNCDX	UEAC4	0.57	11.81	10.04	10.44	8.67			2.07	2.81	0.67	1.41
		Virtual collocation - Special Access & UNE, cross-connect per DS1			ULR, UXTD1, UNC1X, ULDD1, U1TD1, USLEL, UNLD1, USL, UEPEX, UEPDX	CNC1X	1.32	32.22	17.76	10.46	8.75			2.07	2.81	0.67	1.41
		Virtual collocation - Special Acess & UNE, cross-connect per DS3			USL, UE3, U1TD3, UXTS1, UXTD3, UNC3X, UNCSX, ULDD3, U1TS1, ULDS1, UDLSX, UNLD3, XDEST	CND3X	12.32	29.97	16.30	12.03	8.99			2.07	2.81	0.67	1.41
		Virtual Collocation - 2-Fiber Cross Connects			UDL12, UDLO3, U1T48, U1T12, U1TO3, ULDO3, ULD12, ULD48, UDF	CNC2F	3.03	41.56	29.82	12.96	10.34			2.69	2.69	1.56	1.56
		Virtual Collocation - 4-Fiber Cross Connects			UDL12, UDLO3, U1T48, U1T12, U1TO3, ULDO3, ULD12, ULD48, UDF	CNC4F	6.06	50.53	38.78	16.97	14.35			2.69	2.69	1.56	1.56
		Virtual Collocation - Co-Carrier Cross Connects/Direct Connect - Fiber Cable Support Structure, per linear foot, per cable			AMTFS	VE1CB	0.0013										
		Virtual Collocation - Co-Carrier Cross Connects/Direct Connect - Copper/Coax Cable Support Structure, per linear foot, per cable			AMTFS	VE1CD	0.0019										
		Virtual Collocation 2-Wire Cross Connect, Port			UEPSX, UEPSB, UEPSE, UEPSP, UEPSR, UEP2C	VE1R2	0.57	11.62	9.90	10.38	8.66			20.35	10.54	13.32	1.40
		Virtual Collocation 4-Wire Cross Connect, Port			UEPDD, UEPEX	VE1R4	0.57	11.81	10.04	10.44	8.67			20.35	10.54	13.32	1.40

COLLOCATION - Tennessee														Att: 4 Exh: B			
CATEGORY		RATE ELEMENTS	Interim	Zone	BCS	USOC	RATES($)					Svc Order Submitted Elec per LSR	Svc Order Submitted Manually per LSR	Incremental Charge - Manual Svc Order vs. Electronic-1st	Incremental Charge - Manual Svc Order vs. Electronic-Add'l	Incremental Charge - Manual Svc Order vs. Electronic-Disc 1st	Incremental Charge - Manual Svc Order vs. Electronic-Disc Add'l
							Rec	Nonrecurring		Nonrecurring Disconnect		OSS Rates($)					
								First	Add'l	First	Add'l	SOMEC	SOMAN	SOMAN	SOMAN	SOMAN	SOMAN
	CFA																
		Virtual Collocation - CFA Information Resend Request, per Premises, per Arrangement, per request			AMTFS	VE1QR		77.67									
	Cable Records																
		Virtual Collocation Cable Records - per request			AMTFS	VE1BA		1,711.00									
		Virtual Collocation Cable Records - VG/DS0 Cable, per cable record			AMTFS	VE1BB		925.06									
		Virtual Collocation Cable Records - VG/DS0 Cable, per each 100 pair			AMTFS	VE1BC		18.05									
		Virtual Collocation Cable Records - DS1, per T1TIE			AMTFS	VE1BD		8.45									
		Virtual Collocation Cable Records - DS3, per T3TIE			AMTFS	VE1BE		29.57									
		Virtual Collocation Cable Records - Fiber Cable, per 99 fiber records			AMTFS	VE1BF		279.42									
		Virtual Collocation Cable Records - CAT 5/RJ45			AMTFS	VE1B5		8.45									
	Security																
		Virtual collocation - Security escort, basic time, normally scheduled work hours			AMTFS	SPTBX		33.15	20.44					2.07	2.81	0.67	1.41
		Virtual collocation - Security escort, overtime, outside of normally scheduled work hours on a normal working day			AMTFS	SPTOX		41.50	25.61					2.07	2.81	0.67	1.41
		Virtual collocation - Security escort, premium time, outside of a scheduled work day			AMTFS	SPTPX		49.86	30.79					2.07	2.81	0.67	1.41
	Maintenance																
		Virtual collocation - Maintenance in CO - Basic, per half hour			AMTFS	CTRLX		30.64						2.07	2.81	0.67	1.41
		Virtual collocation - Maintenance in CO - Overtime, per half hour			AMTFS	SPTOM		35.77						2.07	2.81	0.67	1.41
		Virtual collocation - Maintenance in CO - Premium per half hour			AMTFS	SPTPM		40.90						2.07	2.81	0.67	1.41
	Entrance Cable																
		Virtual Collocation - Cable Installation Charge, per cable			AMTFS	ESPCX		1,749.00						2.07	2.81	0.67	1.41
		Virtual Collocation - Cable Support Structure, per cable			AMTFS	ESPSX	17.87										
COLLOCATION IN THE REMOTE SITE																	
	Physical Remote Site Collocation																
		Physical Collocation in the Remote Site - Application Fee			CLORS	PE1RA		580.20		312.76							
		Cabinet Space in the Remote Site per Bay/ Rack			CLORS	PE1RB	220.41										
		Physical Collocation in the Remote Site - Security Access - Key			CLORS	PE1RD		24.69									
		Physical Collocation in the Remote Site - Space Availability Report per Premises Requested			CLORS	PE1SR		218.49									
		Physical Collocation in the Remote Site - Remote Site CLLI Code Request, per CLLI Code Requested			CLORS	PE1RE		70.81									
		Remote Site DLEC Data (BRSDD), per Compact Disk, per CO			CLORS	PE1RR		234.15									
		Physical Collocation - Security Escort for Basic Time - normally scheduled work, per half hour			CLORS	PE1BT		33.91	21.49								
		Physical Collocation - Security Escort for Overtime - outside of normally scheduled working hours on a scheduled work day, per half hour			CLORS	PE1OT		44.17	27.76								
		Physical Collocation - Security Escort for Premium Time - outside of scheduled work day, per half hour			CLORS	PE1PT		54.42	34.02								
	Adjacent Remote Site Collocation																
		Remote Site-Adjacent Collocation-Application Fee			CLORS	PE1RU		755.62	755.62								
		Remote Site-Adjacent Collocation - Real Estate, per square foot			CLORS	PE1RT	0.134										
		Remote Site-Adjacent Collocation - AC Power, per breaker amp			CLORS	PE1RS	6.27										
	NOTE: If Security Escort and/or Add'l Engineering Fees become necessary for adjacent remote site collocation, the Parties will negotiate appropriate rates.																
	Virtual Remote Site Collocation																
		Virtual Collocation in the Remote Site - Application Fee			VE1RS	VE1RB		580.20		312.76							
		Virtual Collocation in the Remote Site - Per Bay/Rack of Space			VE1RS	VE1RC	220.41										
		Virtual Collocation in the Remote Site - Space Availability Report per Premises requested			VE1RS	VE1RR		218.49									
		Virtual Collocation in the Remote Site - Remote Site CLLI Code Request, per CLLI Code Requested			VE1RS	VE1RL		70.81									
ADJACENT COLLOCATION																	

COLLOCATION - Tennessee | **Att: 4 Exh: B**

CATEGORY	RATE ELEMENTS	Interim	Zone	BCS	USOC	RATES($)					Svc Order Submitted Elec per LSR	Svc Order Submitted Manually per LSR	Incremental Charge - Manual Svc Order vs. Electronic-1st	Incremental Charge - Manual Svc Order vs. Electronic-Add'l	Incremental Charge - Manual Svc Order vs. Electronic-Disc 1st	Incremental Charge - Manual Svc Order vs. Electronic-Disc Add'l
						Rec	Nonrecurring		Nonrecurring Disconnect		OSS Rates($)					
							First	Add'l	First	Add'l	SOMEC	SOMAN	SOMAN	SOMAN	SOMAN	SOMAN
	Adjacent Collocation - Space Charge per Sq. Ft.			CLOAC	PE1JA	0.0656										
	Adjacent Collocation - Electrical Facility Charge per Linear Ft.			CLOAC	PE1JC	5.53										
	Adjacent Collocation - 2-Wire Cross-Connects			UEANL,UEQ,UEA,UCL, UAL, UHL, UDN	PE1JE	0.34	11.12	10.18	11.33	10.23			1.77	1.77	1.12	1.12
	Adjacent Collocation - 4-Wire Cross-Connects			UEA,UHL,UDL,UCL	PE1JF	0.33	11.30	10.31	11.62	10.44			1.77	1.77	1.12	1.12
	Adjacent Collocation - DS1 Cross-Connects			USL	PE1JG	1.70	28.39	16.88	11.65	10.54			1.77	1.77	1.12	1.12
	Adjacent Collocation - DS3 Cross-Connects			UE3	PE1JH	19.03	26.23	15.51	13.40	10.77			1.77	1.77	1.12	1.12
	Adjacent Collocation - 2-Fiber Cross-Connect			CLOAC	PE1JJ	3.49	26.23	15.51	13.41	10.78			1.77	1.77	1.12	1.12
	Adjacent Collocation - 4-Fiber Cross-Connect			CLOAC	PE1JK	6.50	29.75	19.02	17.60	14.97			1.77	1.77	1.12	1.12
	Adjacent Collocation - Application Fee			CLOAC	PE1JB		2,973.00		0.95				0.00	0.00	0.00	0.00
	Adjacent Collocation - 120V, Single Phase Standby Power Rate per AC Breaker Amp			CLOAC	PE1JL	5.81										
	Adjacent Collocation - 240V, Single Phase Standby Power Rate per AC Breaker Amp			CLOAC	PE1JM	11.64										
	Adjacent Collocation - 120V, Three Phase Standby Power Rate per AC Breaker Amp			CLOAC	PE1JN	17.45										
	Adjacent Collocation - 277V, Three Phase Standby Power Rate per AC Breaker Amp			CLOAC	PE1JO	40.30										

Note: Rates displaying an "I" in Interim column are interim as a result of a Commission order.