SOUTH CAROLINA

GENERATOR INTERCONNECTION AGREEMENT

ELECTRONICALLY FILED - 2019 April 22 5:05 PM - SCPSC - Docket # 2019-130-E - Page 1 of 63

TABLE OF CONTENTS

Page No.

Article 1. Scope and Limitations of Agreement 2

1.1 Applicability 2
1.2 Purpose 2
1.3 No Agreement to Purchase or Deliver Power or RECs 2
1.4 Limitations 2
1.5 Responsibilities of the Parties 2
1.6 Disconnect Switch Required 3
1.7 Parallel Operation Obligations 4
1.8 Metering 4
1.9 Reactive Power 4
1.10 Capitalized Terms 5

Article 2. Inspection, Testing, Authorization, and Right of Access 5

2.1 Equipment Testing and Inspection 5
2.2 Authorization Required Prior to Parallel Operation 6
2.3 Right of Access 6

Article 3. Effective Date, Term, Termination, and Disconnection 7

3.1 Effective Date 7
3.2 Term of Agreement 7
3.3 Termination 7
3.4 Temporary Disconnection 8

Article 4. Cost Responsibility for Interconnection Facilities and Distribution Upgrades 10

4.1 Interconnection Facilities 10
4.2 Distribution Upgrades 10

Article 5. Cost Responsibility for Network Upgrades 11

5.1 Applicability 11
5.2 Network Upgrades 11

Article 6. Billing, Payment, Milestones, and Financial Security 11

6.1 Billing and Payment Procedures and Final Accounting 11
6.2 Milestones 12
6.3 Financial Security Arrangements 12

Article 7. Assignment, Liability, Indemnity, Force Majeure, Consequential Damages, and Default 13

7.1 Assignment 13
7.2 Limitation of Liability 14
7.3 Indemnity 14
7.4 Consequential Damages 15
7.5 Force Majeure 16
7.6 Default 16

ELECTRONICALLY FILED - 2019 April 22 5:05 PM - SCPSC - Docket # 2019-130-E - Page 2 of 63

ELECTRONICALLY FILED - 2019 April 22 5:05 PM - SCPSC - Docket # 2019-130-E - Page 3 of 63

Page No.

Article 8. Insurance 16

Article 9. Confidentiality 18

Article 10. Disputes 19

Article 11. Taxes 19

Article 12. Miscellaneous 19

12.1 Governing Law, Regulatory Authority, and Rules 19
12.2 Amendment 19
12.3 No Third-Party Beneficiaries 20
12.4 Waiver 20
12.5 Entire Agreement 20
12.6 Multiple Counterparts 20
12.7 No Partnership 21
12.8 Severability 21
12.9 Security Arrangements 21
12.10 Environmental Releases 21
12.11 Subcontractors 21
12.12 Reservation of Rights 22

Article 13. Notices 22

13.1 General 22
13.2 Billing and Payment 23
13.3 Alternative Forms of Notice 24
13.4 Designated Operating Representative 25
13.5 Changes to the Notice Information 26

Appendix 1 – Glossary of Terms

Appendix 2 – Description and Costs of the Generating Facility, Interconnection Facilities, and Metering Equipment

Appendix 3 – One-line Diagram Depicting the Generating Facility, Interconnection Facilities, Metering Equipment, and Upgrades

Appendix 4 – Milestones

Appendix 5 – Additional Operating Requirements for the Utility's System and Affected Systems Needed to Support the Interconnection Customer's Needs

Appendix 6 – Utility's Description of its Upgrades and Best Estimate of Upgrade Costs

ELECTRONICALLY FILED - 2019 April 22 5:05 PM - SCPSC - Docket # 2019-130-E - Page 4 of 63

This Interconnection Agreement ("Agreement") is made and entered into this 11th day of February, 2019, by South Carolina Electric & Gas Company ("Utility"), and Barnwell PV1, LLC ("Interconnection Customer") each hereinafter sometimes referred to individually as "Party" or both referred to collectively as the "Parties."

Utility Information

Utility: South Carolina Electric & Gas Company

Attention: Manager – Electric Transmission Support

Address: 220 Operation Way, Mail Code J36

City: Cayce State: SC Zip: 29033

Phone: 803-217-2175 Fax: 803-933-7046

Email: ElectricTransmission@scana.com

Interconnection Customer Information

Interconnection Customer: Barnwell PV1, LLC

Attention: John Gorman

Address: 101 2nd St, Ste 1250

City: San Francisco State: CA Zip: 94105

Phone: 415-626-1802 Other: _____

Email: johng@ecoplexus.com

Interconnection Request ID No: 20170727002

In consideration of the mutual covenants set forth herein, the Parties agree as follows:

ELECTRONICALLY FILED - 2019 April 22 5:05 PM - SCPSC - Docket # 2019-130-E - Page 5 of 63

Article 1. **Scope and Limitations of Agreement**

1.1 Applicability

This Agreement shall be used for all Interconnection Requests submitted under the South Carolina Generator Interconnection Procedures except for those submitted under the 20 kW Inverter Process in Section 2 of the Standard.

1.2 Purpose

This Agreement governs the terms and conditions under which the Interconnection Customer's Generating Facility will interconnect with, and operate in parallel with, the Utility's System.

1.3 No Agreement to Purchase or Deliver Power or RECs

This Agreement does not constitute an agreement to purchase or deliver the Interconnection Customer's power or Renewable Energy Certificates (RECs). The purchase or delivery of power, RECs that might result from the operation of the Generating Facility, and other services that the Interconnection Customer may require will be covered under separate agreements, if any. The Interconnection Customer will be responsible for separately making all necessary arrangements (including scheduling) for delivery of electricity with the applicable Utility.

1.4 Limitations

Nothing in this Agreement is intended to affect any other agreement between the Utility and the Interconnection Customer.

1.5 Responsibilities of the Parties

1.5.1 The Parties shall perform all obligations of this Agreement in accordance with all Applicable Laws and Regulations, Operating Requirements, and Good Utility Practice.

1.5.2 The Interconnection Customer shall construct, interconnect, operate and maintain its Generating Facility and construct, operate, and maintain its Interconnection Facilities in accordance with the applicable manufacturer's recommended maintenance schedule, and in accordance with this Agreement, and with Good Utility Practice.

1.5.3 The Utility shall construct, operate, and maintain its System and Interconnection Facilities in accordance with this Agreement, and with Good Utility Practice.

1.5.4 The Interconnection Customer agrees to construct its facilities or systems in accordance with applicable specifications that meet or exceed those provided by the National Electrical Safety Code, National Electrical Code, the American National Standards Institute, IEEE, Underwriters' Laboratories, and Operating Requirements in effect at the time of construction and other applicable national and state codes and standards. The Interconnection Customer agrees to design, install, maintain, and operate its Generating Facility so as to reasonably minimize the likelihood of a disturbance adversely affecting or impairing the System or equipment of the Utility and any Affected Systems.

1.5.5 Each Party shall operate, maintain, repair, and inspect, and shall be fully responsible for the facilities that it now or subsequently may own unless otherwise specified in the Appendices to this Agreement. Each Party shall be responsible for the safe installation, maintenance, repair and condition of their respective lines and appurtenances on their respective sides of the point of change of ownership. The Utility and the Interconnection Customer, as appropriate, shall provide Interconnection Facilities that adequately protect the Utility's System, personnel, and other persons from damage and injury. The allocation of responsibility for the design, installation, operation, maintenance and ownership of Interconnection Facilities shall be delineated in the Appendices to this Agreement.

1.5.6 The Utility shall coordinate with all Affected Systems to support the interconnection.

1.5.7 The Interconnection Customer is responsible for reviewing the NERC registration requirements, registering when applicable and complying with the applicable Electric Reliability Organization (ERO) reliability standards.

1.6 Disconnect Switch Required

The Interconnection Customer shall install a manual load-break disconnect switch or safety switch as a clear visible indication of switch position between the Utility System and the Interconnection Customer. The switch must have padlock provisions for locking in the open position. The switch must be visible to, and accessible to Utility personnel. The switch must be in visible sight of where the Utilities' interconnection facilities meet the

ELECTRONICALLY FILED - 2019 April 22 5:05 PM - SCPSC - Docket # 2019-130-E - Page 6 of 63

Interconnection Customer's facilities. The switch must be labeled "Generator Disconnect Switch." The switch may isolate the Interconnection Customer and its associated load from the Utility's System or disconnect only the Generator from the Utility's System and shall be accessible to the Utility at all times. The Utility, in its sole discretion, determines if the switch is suitable.

1.7 Parallel Operation Obligations

Once the Generating Facility has been authorized to commence parallel operation, the Interconnection Customer shall abide by all rules and procedures pertaining to the parallel operation of the Generating Facility in the applicable control area, including, but not limited to: 1) any rules and procedures concerning the operation of generation set forth in Commission-approved tariffs or by the applicable system operator(s) for the Utility's System and; 2) the Operating Requirements set forth in Appendix 5 of this Agreement.

1.8 Metering

The Interconnection Customer shall be responsible for the Utility's reasonable and necessary cost for the purchase, installation, operation, maintenance, testing, repair, and replacement of metering and data acquisition equipment specified in Appendices 2 and 3 of this Agreement. The Interconnection Customer's metering (and data acquisition, as required) equipment shall conform to applicable industry rules and Operating Requirements.

1.9 Reactive Power

1.9.1 The Interconnection Customer shall design its Generating Facility to maintain a composite power delivery at continuous rated power output at the Point of Interconnection at a power factor within the range of 0.95 leading to 0.95 lagging, unless the Utility has established different requirements that apply to all similarly situated generators in the control area on a comparable basis. The requirements of this paragraph shall not apply to wind generators.

1.9.2 The Utility is required to pay the Interconnection Customer for reactive power that the Interconnection Customer provides or absorbs from the Generating Facility when the Utility requests the Interconnection Customer to operate its Generating Facility outside the range specified in Article 1.9.1 or the range established by the Utility that applies to all similarly situated generators in the control area. In addition, if the Utility pays its own or affiliated generators for reactive power service within the specified range, it must also pay the Interconnection Customer.

ELECTRONICALLY FILED - 2019 April 22 5:05 PM - SCPSC - Docket # 2019-130-E - Page 7 of 63

1.9.3 Payments shall be in accordance with the Utility's applicable rate schedule then in effect unless the provision of such service(s) is subject to a regional transmission organization or independent system operator FERC-approved rate schedule. To the extent that no rate schedule is in effect at the time the Interconnection Customer is required to provide or absorb reactive power under this Agreement, the Parties agree to expeditiously file such rate schedule and agree to support any request for waiver of any prior notice requirement in order to compensate the Interconnection Customer from the time service commenced.

1.10 Capitalized Terms

Capitalized terms used herein shall have the meanings specified in the Glossary of Terms in Attachment 1 of the South Carolina Generator Interconnection Procedures or the body of this Agreement.

Article 2. **Inspection, Testing, Authorization, and Right of Access**

2.1 Equipment Testing and Inspection

2.1.1 The Interconnection Customer shall test and inspect its Generating Facility and Interconnection Facilities prior to interconnection. The Interconnection Customer shall notify the Utility of such activities no fewer than ten (10) Business Days (or as may be agreed to by the Parties) prior to such testing and inspection. Testing and inspection shall occur on a Business Day, unless otherwise agreed to by the Parties. The Utility may, at the Interconnection Customer's expense, send qualified personnel to the Generating Facility site to inspect the interconnection and observe the testing. The Interconnection Customer shall provide the Utility a written test report when such testing and inspection is completed.

2.1.2 The Utility shall provide the Interconnection Customer written acknowledgment that it has received the Interconnection Customer's written test report. Such written acknowledgment shall not be deemed to be or construed as any representation, assurance, guarantee, or warranty by the Utility of the safety, durability, suitability, or reliability of the Generating Facility or any associated control, protective, and safety devices owned or controlled by the Interconnection Customer or the quality of power produced by the Generating Facility. If determined necessary by the Utility for safe and reliable operation of the Interconnection Facilities and/or Generating Facility, the Utility may also initiate its own inspection and testing activities at the Interconnection Customer's expense prior to authorizing parallel operation of the Generating Facility.

ELECTRONICALLY FILED - 2019 April 22 5:05 PM - SCPSC - Docket # 2019-130-E - Page 8 of 63

2.2 Authorization Required Prior to Parallel Operation

2.2.1 The Utility shall use Reasonable Efforts to list applicable parallel operation requirements in Appendix 5 of this Agreement. Additionally, the Utility shall notify the Interconnection Customer of any changes to these requirements as soon as they are known. The Utility shall make Reasonable Efforts to cooperate with the Interconnection Customer in meeting requirements necessary for the Interconnection Customer to commence parallel operations by the in-service date.

2.2.2 The Interconnection Customer shall not operate its Generating Facility in parallel with the Utility's System without prior written authorization of the Utility. The Utility will provide such authorization once the Utility receives notification that the Interconnection Customer has complied with all applicable parallel operation requirements, including but not limited to additional Operating Requirements presented in Appendix 5 of this Agreement. Such authorization shall not be unreasonably withheld, conditioned, or delayed.

2.3 Right of Access

2.3.1 Upon reasonable notice, the Utility may send a qualified person to the premises of the Interconnection Customer at or immediately before the time the Generating Facility first produces energy to inspect the interconnection, and observe the commissioning of the Generating Facility (including any required testing), startup, and operation for a period of up to three (3) Business Days after initial start-up of the unit. In addition, the Interconnection Customer shall notify the Utility at least five (5) Business Days prior to conducting any on-site verification testing of the Generating Facility.

2.3.2 Following the initial inspection process described above, at reasonable hours, and upon reasonable notice, or at any time without notice in the event of an emergency or hazardous condition, the Utility shall have access to the Interconnection Customer's premises for any reasonable purpose in connection with the performance of the obligations imposed on it by this Agreement or if necessary to meet its legal obligation to provide service to its customers.

2.3.3 Each Party shall be responsible for its own costs associated with following this Article.

ELECTRONICALLY FILED - 2019 April 22 5:05 PM - SCPSC - Docket # 2019-130-E - Page 9 of 63

ELECTRONICALLY FILED - 2019 April 22 5:05 PM - SCPSC - Docket # 2019-130-E - Page 10 of 63

Article 3. **Effective Date, Term, Termination, and Disconnection**

3.1 Effective Date

This Agreement shall become effective upon execution by the Parties.

3.2 Term of Agreement

This Agreement shall become effective on the Effective Date and shall remain in effect for a period of ten (10) years from the Effective Date or such other longer period as the Interconnection Customer may request and shall be automatically renewed for each successive one-year period thereafter, unless terminated earlier in accordance with Article 3.3 of this Agreement.

3.3 Termination

No termination shall become effective until the Parties have complied with all Applicable Laws and Regulations applicable to such termination.

3.3.1 The Interconnection Customer may terminate this Agreement at any time by giving the Utility 20 Business Days written notice and physically and permanently disconnecting the Generating Facility from the Utility's System.

3.3.2 The Utility may terminate this Agreement for failure to comply with the requirements of Article 7.1.2 or Article 7.1.3.

3.3.3 Either Party may terminate this Agreement after Default pursuant to Article 7.6.

3.3.4 Upon termination of this Agreement, the Generating Facility will be disconnected from the Utility's System. All costs required to effectuate such disconnection shall be borne by the terminating Party, unless such termination resulted from the non-terminating Party's Default of this Agreement or such non-terminating Party otherwise is responsible for these costs under this Agreement.

3.3.5 The termination of this Agreement shall not relieve either Party of its liabilities and obligations, owed or continuing at the time of the termination, including any remaining term requirements for payment of Charges that are billed under a monthly payment option as prescribed in Article 6.

3.3.6 The provisions of this article shall survive termination or expiration of this Agreement.

ELECTRONICALLY FILED - 2019 April 22 5:05 PM - SCPSC - Docket # 2019-130-E - Page 11 of 63

3.4 Temporary Disconnection

Temporary disconnection shall continue only for so long as reasonably necessary under Good Utility Practice.

3.4.1 Isolating or Disconnecting the Generating Facility

The Utility may isolate the Interconnection Customer's premises and/or Generating Facility from the Utility's System when necessary in order to construct, install, repair, replace, remove, investigate or inspect any of the Utility's equipment or part of Utility's System; or if the Utility determines that isolation of the Interconnection Customer's premises and/or Generating Facility from the Utility's System is necessary because of emergencies, forced outages, force majeure or compliance with prudent electrical practices. Whenever feasible, the Utility shall give the Interconnection Customer reasonable notice of the isolation of the Interconnection Customer's premises and/or Generating Facility from the Utility's System.

Notwithstanding any other provision of this Agreement, if at any time the Utility determines that the continued operation of the Generating Facility may endanger either (1) the Utility's personnel or other persons or property or (2) the integrity or safety of the Utility's System, or otherwise cause unacceptable power quality problems for other electric consumers, the Utility shall have the right to isolate the Interconnection Customer's premises and/or Generating Facility from the Utility's System.

3.4.2 Emergency Conditions

Under Emergency Conditions, the Utility may immediately suspend interconnection service and temporarily disconnect the Generating Facility. The Utility shall notify the Interconnection Customer promptly when it becomes aware of an Emergency Condition that may reasonably be expected to affect the Interconnection Customer's operation of the Generating Facility. The Interconnection Customer shall notify the Utility promptly when it becomes aware of an Emergency Condition that may reasonably be expected to affect the Utility's System or any Affected Systems. To the extent information is known, the notification shall describe the Emergency Condition, the extent of the damage or deficiency, the expected effect on the operation of both Parties' facilities and operations, its anticipated duration, and the necessary corrective action.

ELECTRONICALLY FILED - 2019 April 22 5:05 PM - SCPSC - Docket # 2019-130-E - Page 12 of 63

3.4.3 Routine Maintenance, Construction, and Repair

The Utility may interrupt interconnection service or curtail the output of the Generating Facility and temporarily disconnect the Generating Facility from the Utility's System when necessary for routine maintenance, construction, and repairs on the Utility's System. The Utility shall make best efforts to provide the Interconnection Customer reasonable notice prior to such interruption. The Utility shall use Reasonable Efforts to coordinate such reduction or temporary disconnection with the Interconnection Customer.

3.4.4 Forced Outages

During any forced outage, the Utility may suspend interconnection service to effect immediate repairs on the Utility's System. The Utility shall use Reasonable Efforts to provide the Interconnection Customer with prior notice. If prior notice is not given, the Utility shall, upon request, provide the Interconnection Customer written documentation after the fact explaining the circumstances of the disconnection.

3.4.5 Adverse Operating Effects

The Utility shall notify the Interconnection Customer as soon as practicable if, based on Good Utility Practice, operation of the Generating Facility may cause disruption or deterioration of service to other customers served from the same electric system, or if operating the Generating Facility could cause damage to the Utility's System or Affected Systems. Supporting documentation used to reach the decision to disconnect shall be provided to the Interconnection Customer upon request. If, after notice, the Interconnection Customer fails to remedy the adverse operating effect within a reasonable time, the Utility may disconnect the Generating Facility. The Utility shall make best efforts to provide the Interconnection Customer reasonable notice of such disconnection, unless the provisions of Article 3.4.1 apply.

3.4.6 Failure to Maintain Compliance with Operating Requirements

The Utility may disconnect from the Utility's System any Generating Facility determined to be malfunctioning, or not in compliance with this Standard or Operating Requirements. The Interconnection Customer must provide proof of compliance with this Agreement or

Operating Requirements before the Generating Facility will be reconnected.

3.4.7 Modification of the Generating Facility

The Interconnection Customer must receive written authorization from the Utility before making any Material Modification or any other change to the Generating Facility that may have a material impact on the safety or reliability of the Utility's System. Such authorization shall not be unreasonably withheld. Modifications shall be done in accordance with Good Utility Practice. If the Interconnection Customer makes such modification without the Utility's prior written authorization, the latter shall have the right to temporarily disconnect the Generating Facility.

3.4.8 Reconnection

The Parties shall cooperate with each other to restore the Generating Facility, Interconnection Facilities, and the Utility's System to their normal operating state as soon as reasonably practicable following a temporary or emergency disconnection.

Article 4. **Cost Responsibility for Interconnection Facilities and Distribution Upgrades**

4.1 Interconnection Facilities

4.1.1 The Interconnection Customer shall pay for the cost of the Interconnection Facilities itemized in Appendix 2 of this Agreement. The Utility shall provide a best estimate cost, including overheads, for the purchase and construction of its Interconnection Facilities and provide a detailed itemization of such costs. Costs associated with Interconnection Facilities may be shared with other entities that may benefit from such facilities by agreement of the Interconnection Customer, such other entities, and the Utility.

4.1.2 The Interconnection Customer shall be responsible for its share of all reasonable expenses, including overheads, associated with (1) owning, operating, maintaining, repairing, and replacing its own Interconnection Facilities, and (2) operating, maintaining, repairing, and replacing the Utility's Interconnection Facilities.

4.2 Distribution Upgrades

The Utility shall design, procure, construct, install, and own the Distribution Upgrades described in Appendix 6 of this Agreement. The actual cost of the

ELECTRONICALLY FILED - 2019 April 22 5:05 PM - SCPSC - Docket # 2019-130-E - Page 13 of 63

Distribution Upgrades, including overheads, on-going operations, maintenance, repair, and replacement, shall be directly assigned to the Interconnection Customer.

Article 5. **Cost Responsibility for Network Upgrades**

5.1 Applicability

No portion of this Article 5 shall apply unless the interconnection of the Generating Facility requires Network Upgrades.

5.2 Network Upgrades

The Utility shall design, procure, construct, install, and own the Network Upgrades described in Appendix 6 of this Agreement. The cost of the Network Upgrades, including overheads, on-going operations, maintenance, repair, and replacement shall be borne by the Interconnection Customer.

Article 6. **Billing, Payment, Milestones, and Financial Security**

6.1 Billing and Payment Procedures and Final Accounting

The Interconnection Customer shall pay 100% of required Interconnection Facilities, and any other charges as required in Appendix 2 pursuant to the milestones specified in Appendix 4. The Interconnection Customer shall pay 100% of required Upgrades and any other charges as required in Appendix 6 pursuant to the milestones specified in Appendix 4. Upon receipt of 100% of the foregoing pre-payment charges, the payment is not refundable due to cancellation of the Interconnection Request for any reason.

6.1.1 If implemented by the Utility or requested by the Interconnection Customer in writing within 15 Business Days of the Utility completing the construction and installation of the Utility's Interconnection Facilities and/or Upgrades described in the Appendices to this Agreement, the Utility shall provide the Interconnection Customer a final accounting report within 60 Business Days addressing any difference between (1) the Interconnection Customer's cost responsibility for the actual cost of such facilities or Upgrades, and (2) the Interconnection Customer's previous aggregate payments to the Utility for such facilities or Upgrades. If the Interconnection Customer's cost responsibility exceeds its previous aggregate payments, the Utility shall invoice the Interconnection Customer for the amount due and the Interconnection Customer shall make payment to the Utility within 20 Business Days. If the Interconnection Customer's previous aggregate payments exceed its cost

ELECTRONICALLY FILED - 2019 April 22 5:05 PM - SCPSC - Docket # 2019-130-E - Page 14 of 63

responsibility under this Agreement, the Utility shall refund to the Interconnection Customer an amount equal to the difference within 20 Business Days of the final accounting report. If necessary and appropriate as a result of the final accounting, the Utility may also adjust the monthly charges set forth in Appendix 2 of the Interconnection Agreement.

6.1.2 The Utility shall bill the Interconnection Customer for the costs associated with operating, maintaining, repairing and replacing the Utility's System Upgrades, as set forth in Appendix 6 of this Agreement. The Utility shall bill the Interconnection Customer for the costs of commissioning and inspection of the Interconnection Customer's Interconnection Facilities and for providing the Utility's Interconnection Facilities including the costs for on-going operations, maintenance, repair and replacement of the Utility's Interconnection Facilities under a Utility rate schedule, tariff, rider or service regulation providing for extra facilities or additional facilities charges, as set forth in Appendix 2 of this Agreement, such monthly charges to continue throughout the entire life of the interconnection.

6.2 Milestones

The Parties shall agree on milestones for which each Party is responsible and list them in Appendix 4 of this Agreement. A Party's obligations under this provision may be extended by agreement, except for timing for Payment or Financial Security-related requirements set forth in the milestones, which shall adhere to Section 5.2.4 of the Standards. If a Party anticipates that it will be unable to meet a milestone for any reason other than a Force Majeure Event, it shall immediately notify the other Party of the reason(s) for not meeting the milestone and (1) propose the earliest reasonable alternate date by which it can attain this and future milestones, and (2) request appropriate amendments to Appendix 4. The Party affected by the failure to meet a milestone shall not unreasonably withhold agreement to such an amendment unless (1) it will suffer significant uncompensated economic or operational harm from the delay, (2) the delay will materially affect the schedule of another Interconnection Customer with subordinate Queue Position, (3) attainment of the same milestone has previously been delayed, or (4) it has reason to believe that the delay in meeting the milestone is intentional or unwarranted notwithstanding the circumstances explained by the Party proposing the amendment.

6.3 Financial Security Arrangements

Pursuant to the Interconnection Agreement Milestones Appendix 4, the Interconnection Customer shall provide the Utility a letter of credit or other financial security arrangement that is reasonably acceptable to the Utility

ELECTRONICALLY FILED - 2019 April 22 5:05 PM - SCPSC - Docket # 2019-130-E - Page 15 of 63

and is consistent with the Uniform Commercial Code of South Carolina. Such security for payment shall be in an amount sufficient to cover the costs for constructing, designing, procuring, and installing the applicable portion of the Utility's Interconnection Facilities and Upgrades and shall be reduced on a dollar-for-dollar basis for payments made to the Utility under this Agreement during its term. In addition:

6.3.1 The guarantee must be made by an entity that meets the creditworthiness requirements of the Utility, and contain terms and conditions that guarantee payment of any amount that may be due from the Interconnection Customer, up to an agreed-to maximum amount.

6.3.2 The letter of credit must be issued by a financial institution or insurer reasonably acceptable to the Utility and must specify a reasonable expiration date.

6.3.3 The Utility may waive the security requirements if its credit policies show that the financial risks involved are de minimus, or if the Utility's policies allow the acceptance of an alternative showing of credit-worthiness from the Interconnection Customer.

Article 7. Assignment, Liability, Indemnity, Force Majeure, Consequential Damages, and Default

7.1 Assignment

7.1.1 The Interconnection Customer shall notify the Utility of the pending sale of an existing Generation Facility in writing. The Interconnection Customer shall provide the Utility with information regarding whether the sale is a change of ownership of the Generation Facility to a new legal entity, or a change of control of the existing legal entity.

7.1.2 The Interconnection Customer shall promptly notify the Utility of the final date of sale and transfer date of ownership in writing. The purchaser of the Generation Facility shall confirm to the Utility the final date of sale and transfer date of ownership in writing

7.1.3 This Agreement shall not survive the transfer of ownership of the Generating Facility to a new legal entity owner. The new owner must complete a new Interconnection Request and submit it to the Utility within 20 Business Days of the transfer of ownership or the Utility's Interconnection Facilities shall be removed or disabled and the Generating Facility disconnected from the Utility's System. The Utility shall not study or inspect the Generating Facility unless the new

ELECTRONICALLY FILED - 2019 April 22 5:05 PM - SCPSC - Docket # 2019-130-E - Page 16 of 63

owner's Interconnection Request indicates that a Material Modification has occurred or is proposed.

7.1.4 This Agreement shall survive a change of control of the Generating Facility' legal entity owner, where only the contact information in the Interconnection Agreement must be modified. The new owner must complete a new Interconnection Request and submit it to the Utility within 20 Business Days of the change of control and provide the new contact information. The Utility shall not study or inspect the Generating Facility unless the new owner's Interconnection Request indicates that a Material Modification has occurred or is proposed.

7.1.5 The Interconnection Customer shall have the right to assign this Agreement, without the consent of the Utility, for collateral security purposes to aid in providing financing for the Generating Facility, provided that the Interconnection Customer will promptly notify the Utility of any such assignment. Assignment shall not relieve a Party of its obligations, nor shall a Party's obligations be enlarged, in whole or in part, by reason thereof.

7.1.6 Any attempted assignment that violates this article is void and ineffective.

7.2 Limitation of Liability

Each Party's liability to the other Party for any loss, cost, claim, injury, liability, or expense, including reasonable attorney's fees, relating to or arising from any act or omission in its performance of this Agreement, shall be limited to the amount of direct damage actually incurred. In no event shall either Party be liable to the other Party for any indirect, special, incidental, consequential, or punitive damages of any kind, except as authorized by this Agreement.

7.3 Indemnity

7.3.1 This provision protects each Party from liability incurred to third parties as a result of carrying out the provisions of this Agreement. Liability under this provision is exempt from the general limitations on liability found in Article 7.2.

7.3.2 The Parties shall at all times indemnify, defend, and save the other Party harmless from, any and all damages, losses, claims, including claims and actions relating to injury to or death of any person or damage to property, demand, suits, recoveries, costs and expenses, court costs, attorney fees, and all other obligations by or to third parties, arising out of or resulting from the other Party's action or

ELECTRONICALLY FILED - 2019 April 22 5:05 PM - SCPSC - Docket # 2019-130-E - Page 17 of 63

inaction of its obligations under this Agreement on behalf of the indemnifying Party, except in cases of gross negligence or intentional wrongdoing by the indemnified Party.

7.3.3 If an indemnified Party is entitled to indemnification under this Article as a result of a claim by a third party, and the indemnifying Party fails, after notice and reasonable opportunity to proceed under this Article, to assume the defense of such claim, such indemnified Party may at the expense of the indemnifying Party contest, settle or consent to the entry of any judgment with respect to, or pay in full, such claim.

7.3.4 If an indemnifying Party is obligated to indemnify and hold any indemnified Party harmless under this Article, the amount owing to the indemnified Party shall be the amount of such indemnified Party's actual loss, net of any insurance or other recovery.

7.3.5 Promptly after receipt by an indemnified Party of any claim or notice of the commencement of any action or administrative or legal proceeding or investigation as to which the indemnity provided for in this Article may apply, the indemnified Party shall notify the indemnifying Party of such fact. Any failure of or delay in such notification shall not affect a Party's indemnification obligation unless such failure or delay is materially prejudicial to the indemnifying Party.

7.4 Consequential Damages

Other than as expressly provided for in this Agreement, neither Party shall be liable under any provision of this Agreement for any losses, damages, costs or expenses for any special, indirect, incidental, consequential, or punitive damages, including but not limited to loss of profit or revenue, loss of the use of equipment, cost of capital, cost of temporary equipment or services, whether based in whole or in part in contract, in tort, including negligence, strict liability, or any other theory of liability; provided, however, that damages for which a Party may be liable to the other Party under another agreement will not be considered to be special, indirect, incidental, or consequential damages hereunder.

7.5 Force Majeure

7.5.1 As used in this article, a Force Majeure Event shall mean any act of God, labor disturbance, act of the public enemy, war, insurrection, riot, fire, storm or flood, explosion, breakage or accident to machinery or equipment, any order, regulation or restriction imposed by governmental, military or lawfully established civilian authorities, or

ELECTRONICALLY FILED - 2019 April 22 5:05 PM - SCPSC - Docket # 2019-130-E - Page 18 of 63

any other cause beyond a Party's control. A Force Majeure Event does not include an act of negligence or intentional wrongdoing.

7.5.2 If a Force Majeure Event prevents a Party from fulfilling any obligations under this Agreement, the Party affected by the Force Majeure Event (Affected Party) shall promptly notify the other Party, either in writing or via the telephone, of the existence of the Force Majeure Event. The notification must specify in reasonable detail the circumstances of the Force Majeure Event, its expected duration, and the steps that the Affected Party is taking to mitigate the effects of the event on its performance. The Affected Party shall keep the other Party informed on a continuing basis of developments relating to the Force Majeure Event until the event ends. The Affected Party will be entitled to suspend or modify its performance of obligations under this Agreement (other than the obligation to make payments) only to the extent that the effect of the Force Majeure Event cannot be mitigated by the use of Reasonable Efforts. The Affected Party will use Reasonable Efforts to resume its performance as soon as possible.

7.6 Default

7.6.1 No Default shall exist where such failure to discharge an obligation (other than the payment of money or provision of Financial Security) is the result of a Force Majeure Event as defined in this Agreement or the result of an act or omission of the other Party. Upon a Default, the non-defaulting Party shall give written notice of such Default to the defaulting Party. Except as provided in Article 7.6.2, the defaulting Party shall have five (5) Business Days from receipt of the Default notice within which to cure such Default.

7.6.2 If a Default is not cured as provided in this Article, the non-defaulting Party shall have the right to terminate this Agreement by written notice at any time until cure occurs, and be relieved of any further obligation hereunder and, whether or not that Party terminates this Agreement, to recover from the defaulting Party all amounts due hereunder, plus all other damages and remedies to which it is entitled at law or in equity. The provisions of this article will survive termination of this Agreement.

Article 8. **Insurance**

8.1 The Interconnection Customer shall obtain and retain, for as long as the Generating Facility is interconnected with the Utility's System, liability insurance which protects the Interconnection Customer from claims for bodily injury and/or property damage. The amount of such insurance shall

ELECTRONICALLY FILED - 2019 April 22 5:05 PM - SCPSC - Docket # 2019-130-E - Page 19 of 63

be sufficient to insure against all reasonably foreseeable direct liabilities given the size and nature of the generating equipment being interconnected, the interconnection itself, and the characteristics of the system to which the interconnection is made. This insurance shall be primary for all purposes. The Interconnection Customer shall provide certificates evidencing this coverage as required by the Utility. Such insurance shall be obtained from an insurance provider authorized to do business in South Carolina. The Utility reserves the right to refuse to establish or continue the interconnection of the Generating Facility with the Utility's System, if such insurance is not in effect.

8.1.1 For an Interconnection Customer that is a residential customer of the Utility proposing to interconnect a Generating Facility no larger than 250 kW, the required coverage shall be a standard homeowner's insurance policy with liability coverage in the amount of at least $100,000 per occurrence.

8.1.2 For an Interconnection Customer that is a non-residential customer of the Utility proposing to interconnect a Generating Facility no larger than 250 kW, the required coverage shall be comprehensive general liability insurance with coverage in the amount of at least $300,000 per occurrence.

8.1.3 For an Interconnection Customer that is a non-residential customer of the Utility proposing to interconnect a Generating Facility greater than 250 kW, the required coverage shall be comprehensive general liability insurance with coverage in the amount of at least $1,000,000 per occurrence.

8.1.4 An Interconnection Customer of sufficient credit-worthiness may propose to provide this insurance via a self-insurance program if it has a self-insurance program established in accordance with commercially acceptable risk management practices, and such a proposal shall not be unreasonably rejected.

8.2 The Utility agrees to maintain general liability insurance or self-insurance consistent with the Utility's commercial practice. Such insurance or self-insurance shall not exclude coverage for the Utility's liabilities undertaken pursuant to this Agreement.

8.3 The Parties further agree to notify each other whenever an accident or incident occurs resulting in any injuries or damages that are included within the scope of coverage of such insurance, whether or not such coverage is sought.

ELECTRONICALLY FILED - 2019 April 22 5:05 PM - SCPSC - Docket # 2019-130-E - Page 20 of 63

Article 9. **Confidentiality**

9.1 Confidential Information shall mean any confidential and/or proprietary information provided by one Party to the other Party that is clearly marked or otherwise designated "Confidential." For purposes of this Agreement all design, operating specifications, and metering data provided by the Interconnection Customer shall be deemed Confidential Information regardless of whether it is clearly marked or otherwise designated as such.

9.2 Confidential Information does not include information previously in the public domain, required to be publicly submitted or divulged by Governmental Authorities (after notice to the other Party and after exhausting any opportunity to oppose such publication or release), or necessary to be divulged in an action to enforce this Agreement. Each Party receiving Confidential Information shall hold such information in confidence and shall not disclose it to any third party nor to the public without the prior written authorization from the Party providing that information, except to fulfill obligations under this Agreement, or to fulfill legal or regulatory requirements.

9.1.1 Each Party shall employ at least the same standard of care to protect Confidential Information obtained from the other Party as it employs to protect its own Confidential Information.

9.1.2 Each Party is entitled to equitable relief, by injunction or otherwise, to enforce its rights under this provision to prevent the release of Confidential Information without bond or proof of damages, and may seek other remedies available at law or in equity for breach of this provision.

9.1.3 All information pertaining to a project will be provided to the new owner in the case of a change of control of the existing legal entity or a change of ownership to a new legal entity.

9.3 If information is requested by the Commission from one of the Parties that is otherwise required to be maintained in confidence pursuant to this Agreement, the Party shall provide the requested information to the Commission within the time provided for in the request for information. In providing the information to the Commission, the Party may request that the information be treated as confidential and non-public in accordance with South Carolina law and that the information be withheld from public disclosure.

ELECTRONICALLY FILED - 2019 April 22 5:05 PM - SCPSC - Docket # 2019-130-E - Page 21 of 63

ELECTRONICALLY FILED - 2019 April 22 5:05 PM - SCPSC - Docket # 2019-130-E - Page 22 of 63

Article 10. **Disputes**

10.1 The Parties agree to attempt to resolve all disputes arising out of the interconnection process according to the provisions of this Article.

10.2 In the event of a dispute, either Party shall provide the other Party with a written notice of dispute. Such notice shall describe in detail the nature of the dispute.

10.3 If the dispute has not been resolved within 20 Business Days after receipt of the notice, either Party may contact the Office of Regulatory Staff for assistance in informally resolving the dispute. If the Parties are unable to informally resolve the dispute, either Party may then file a formal complaint with the Commission.

10.4 Each Party agrees to conduct all negotiations in good faith.

Article 11. **Taxes**

11.1 The Parties agree to follow all applicable tax laws and regulations, consistent with South Carolina and federal policy and revenue requirements.

11.2 Each Party shall cooperate with the other to maintain the other Party's tax status. Nothing in this Agreement is intended to adversely affect the Utility's tax exempt status with respect to the issuance of bonds including, but not limited to, local furnishing bonds.

Article 12. **Miscellaneous**

12.1 Governing Law, Regulatory Authority, and Rules

The validity, interpretation and enforcement of this Agreement and each of its provisions shall be governed by the laws of the State of South Carolina, without regard to its conflicts of law principles. This Agreement is subject to all Applicable Laws and Regulations. Each Party expressly reserves the right to seek changes in, appeal, or otherwise contest any laws, orders, or regulations of a Governmental Authority.

12.2 Amendment

The Parties may amend this Agreement by a written instrument duly executed by both Parties, or under Article 12.12 of this Agreement.

12.3 No Third-Party Beneficiaries

This Agreement is not intended to and does not create rights, remedies, or benefits of any character whatsoever in favor of any persons, corporations, associations, or entities other than the Parties, and the obligations herein assumed are solely for the use and benefit of the Parties, their successors in interest and where permitted, their assigns.

12.4 Waiver

12.4.1 The failure of a Party to this Agreement to insist, on any occasion, upon strict performance of any provision of this Agreement will not be considered a waiver of any obligation, right, or duty of, or imposed upon, such Party.

12.4.2 Any waiver at any time by either Party of its rights with respect to this Agreement shall not be deemed a continuing waiver or a waiver with respect to any other failure to comply with any other obligation, right, duty of this Agreement. Termination or default of this Agreement for any reason by Interconnection Customer shall not constitute a waiver of the Interconnection Customer's legal rights to obtain an interconnection from the Utility. Any waiver of this Agreement shall, if requested, be provided in writing.

12.5 Entire Agreement

This Agreement, including all Appendices, constitutes the entire agreement between the Parties with reference to the subject matter hereof, and supersedes all prior and contemporaneous understandings or agreements, oral or written, between the Parties with respect to the subject matter of this Agreement. There are no other agreements, representations, warranties, or covenants which constitute any part of the consideration for, or any condition to, either Party's compliance with its obligations under this Agreement.

12.6 Multiple Counterparts

This Agreement may be executed in two or more counterparts, each of which is deemed an original but all constitute one and the same instrument.

12.7 No Partnership

This Agreement shall not be interpreted or construed to create an association, joint venture, agency relationship, or partnership between the Parties or to impose any partnership obligation or partnership liability upon either Party. Neither Party shall have any right, power or authority to enter

ELECTRONICALLY FILED - 2019 April 22 5:05 PM - SCPSC - Docket # 2019-130-E - Page 23 of 63

into any agreement or undertaking for, or act on behalf of, or to act as or be an agent or representative of, or to otherwise bind, the other Party.

12.8 Severability

If any provision or portion of this Agreement shall for any reason be held or adjudged to be invalid or illegal or unenforceable by any court of competent jurisdiction or other Governmental Authority, (1) such portion or provision shall be deemed separate and independent, (2) the Parties shall negotiate in good faith to restore insofar as practicable the benefits to each Party that were affected by such ruling, and (3) the remainder of this Agreement shall remain in full force and effect.

12.9 Security Arrangements

Infrastructure security of electric system equipment and operations and control hardware and software is essential to ensure day-to-day reliability and operational security. All Utilities are expected to meet basic standards for electric system infrastructure and operational security, including physical, operational, and cyber-security practices.

12.10 Environmental Releases

Each Party shall notify the other Party, first orally and then in writing, of the release of any hazardous substances, any asbestos or lead abatement activities, or any type of remediation activities related to the Generating Facility or the Interconnection Facilities, each of which may reasonably be expected to affect the other Party. The notifying Party shall (1) provide the notice as soon as practicable, provided such Party makes a good faith effort to provide the notice no later than 24 hours after such Party becomes aware of the occurrence, and (2) promptly furnish to the other Party copies of any publicly available reports filed with any Governmental Authorities addressing such events.

12.11 Subcontractors

Nothing in this Agreement shall prevent a Party from utilizing the services of any subcontractor as it deems appropriate to perform its obligations under this Agreement; provided, however, that each Party shall require its subcontractors to comply with all applicable terms and conditions of this Agreement in providing such services and each Party shall remain primarily liable to the other Party for the performance of such subcontractor.

12.11.1 The creation of any subcontract relationship shall not relieve the hiring Party of any of its obligations under this Agreement. The hiring Party shall be fully responsible to the other Party for the

ELECTRONICALLY FILED - 2019 April 22 5:05 PM - SCPSC - Docket # 2019-130-E - Page 24 of 63

acts or omissions of any subcontractor the hiring Party hires as if no subcontract had been made; provided, however, that in no event shall the Utility be liable for the actions or inactions of the Interconnection Customer or its subcontractors with respect to obligations of the Interconnection Customer under this Agreement. Any applicable obligation imposed by this Agreement upon the hiring Party shall be equally binding upon, and shall be construed as having application to, any subcontractor of such Party.

12.11.2 The obligations under this article will not be limited in any way by any limitation of subcontractor's insurance.

12.12 Reservation of Rights

The Utility shall have the right to make a unilateral filing with the Commission to modify this Agreement with respect to any rates, terms and conditions, charges, or classifications of service, and the Interconnection Customer shall have the right to make a unilateral filing with the Commission to modify this Agreement; provided that each Party shall have the right to protest any such filing by the other Party and to participate fully in any proceeding before the Commission in which such modifications may be considered. Nothing in this Agreement shall limit the rights of the Parties except to the extent that the Parties otherwise agree as provided herein.

Article 13. **Notices**

13.1 General

Unless otherwise provided in this Agreement, any written notice, demand, or request required or authorized in connection with this Agreement (Notice) shall be deemed properly given if delivered in person, delivered by recognized national courier service, sent by first class mail, postage prepaid, or sent electronically to the person specified below:

If to the Interconnection Customer:

Interconnection Customer: Barnwell PV1, LLC

Attention: John Gorman

Address: 101 2nd St, Ste 1250

City: San Francisco State: CA Zip: 94105

Phone: 415-626-1802 Other: _____

ELECTRONICALLY FILED - 2019 April 22 5:05 PM - SCPSC - Docket # 2019-130-E - Page 25 of 63

Email: johng@ecoplexus.com

If to the Utility:

Utility: South Carolina Electric & Gas Company

Attention: Manager – Electric Transmission Support

Address: 220 Operation Way, Mail Code J36

City: Cayce State: SC Zip: 29033

Phone: 803-217-2175 Fax: 803-933-7046

Email: ElectricTransmission@scana.com

13.2 Billing and Payment

Billings and payments shall be sent to the addresses set out below:

If to the Interconnection Customer:

Interconnection Customer: Barnwell PV1, LLC

Attention: Erik Stuebe

Address: 101 2nd Street, Suite 1250

City: San Francisco State: CA Zip: 94105

Phone: (415) 626-1802 Other: _____

ELECTRONICALLY FILED - 2019 April 22 5:05 PM - SCPSC - Docket # 2019-130-E - Page 26 of 63

Email: eriks@ecoplexus.com & accountspayable@ecoplexus.com

If to the Utility:

Utility: South Carolina Electric & Gas Company

Attention: Manager – Electric Transmission Support

Address: 220 Operation Way, Mail Code J36

City: Cayce State: SC Zip: 29033

Phone: 803-217-2175 Fax: 803-933-7046

Email: ElectricTransmission@scana.com

13.3 Alternative Forms of Notice

Any notice or request required or permitted to be given by either Party to the other and not required by this Agreement to be given in writing may be so given by telephone, facsimile or e-mail to the telephone numbers and e-mail addresses set out below:

If to the Interconnection Customer:

Attention: John Gorman

Address: 101 2nd St, Ste 1250

City: San Francisco State: CA Zip: 94105

Phone: 415-626-1802 Other:

Email: johng@ecoplexus.com

ELECTRONICALLY FILED - 2019 April 22 5:05 PM - SCPSC - Docket # 2019-130-E - Page 27 of 63

If to the Utility:

Utility: South Carolina Electric & Gas Company

Attention: Manager – Electric Transmission Support

Address: 220 Operation Way, Mail Code J36

City: Cayce State: SC Zip: 29033

Phone: 803-217-2175 Fax: 803-933-7046

Email: ElectricTransmission@scana.com

13.4 Designated Operating Representative

The Parties may also designate operating representatives to conduct the communications which may be necessary or convenient for the administration of this Agreement. This person will also serve as the point of contact with respect to operations and maintenance of the Party's facilities.

Interconnection Customer's Operating Representative:

Attention: John Gorman

Address: 101 2nd St, Ste 1250

City: San Francisco State: CA Zip: 94105

Phone: 415-626-1802 Other: _____

Email: johng@ecoplexus.com

ELECTRONICALLY FILED - 2019 April 22 5:05 PM - SCPSC - Docket # 2019-130-E - Page 28 of 63

Utility's Operating Representative:

Utility: South Carolina Electric & Gas Company

Attention: Manager – Electric Transmission Support

Address: 220 Operation Way, Mail Code J36

City: Cayce State: SC Zip: 29033

Phone: 803-217-2175 Fax: 803-933-7046

Email: ElectricTransmission@scana.com

13.5 Changes to the Notice Information

Either Party may change this information by giving five Business Days written notice prior to the effective date of the change.

ELECTRONICALLY FILED - 2019 April 22 5:05 PM - SCPSC - Docket # 2019-130-E - Page 29 of 63

IN WITNESS WHEREOF, the Parties have caused this Agreement to be executed by their respective duly authorized representatives.

For the Utility

Name: P. Xanthakos

Print Name: Pandelis N. Xanthakos

Title: VP – Electric Transmission

Date: 2/13/19

For the Interconnection Customer

Name: [signature]

Print Name: John Gorman

Title: CEO, Fresh Air Energy II, LLC

Date: 2/11/2019

ELECTRONICALLY FILED - 2019 April 22 5:05 PM - SCPSC - Docket # 2019-130-E - Page 30 of 63

See Glossary of Terms, Attachment 1 to the South Carolina Generator Interconnection Procedures.

For ease of reference, the Glossary of Terms is reproduced herein.

Glossary of Terms

20 kW Inverter Process – The procedure for evaluating an Interconnection Request for a certified inverter-based Generating Facility no larger than 20 kW that uses the Section 2 screens. The application process uses an all-in-one document that includes a simplified Interconnection Request Application Form, simplified procedures, and a brief set of Terms and Conditions. (See Attachment 7)

Affected System – An electric system other than the Utility's System that may be affected by the proposed interconnection. The owner of an Affected System might be a Party to the Interconnection Agreement or other study agreements needed to interconnect the Generating Facility.

Applicable Laws and Regulations – All duly promulgated applicable federal, state and local laws, regulations, rules, ordinances, codes, decrees, judgments, directives, or judicial or administrative orders, permits and other duly authorized actions of any Governmental Authority.

Auxiliary Load – The term "Auxiliary Load" shall mean power used to operate auxiliary equipment in the facility necessary for power generation (such as pumps, blowers, fuel preparation machinery, exciters, etc.).

Business Day – Monday through Friday, excluding State Holidays.

Commission – The Public Service Commission of South Carolina.

Default – The failure of a breaching Party to cure its breach under the Interconnection Agreement.

Distribution System – The Utility's facilities and equipment used to transmit electricity to ultimate usage points such as homes and industries from nearby generators or from interchanges with higher voltage transmission networks which transport bulk power over longer distances. The voltage levels at which Distribution Systems operate differ among areas.

Distribution Upgrades – The additions, modifications, and upgrades to the Utility's Distribution System at or beyond the Point of Interconnection to facilitate interconnection of the Generating Facility and render the service necessary to allow the

ELECTRONICALLY FILED - 2019 April 22 5:05 PM - SCPSC - Docket # 2019-130-E - Page 31 of 63

Generating Facility to operate in parallel with the Utility and to inject electricity onto the Utility's System. Distribution Upgrades do not include Interconnection Facilities.

Emergency Condition – The term "Emergency Condition" shall mean a condition or situation: (1) that in the judgment of the Party making the claim is imminently likely to endanger life or property; or (2) that, in the case of the Utility, is imminently likely (as determined in a non-discriminatory manner) to cause a material adverse effect on the security of, or damage to the Utility's System, the Utility's Interconnection Facilities or the systems of others to which the Utility's System is directly connected; or (3) that, in the case of the Interconnection Customer, is imminently likely (as determined in a non-discriminatory manner) to cause a material adverse effect on the security of, or damage to, the Generating Facility or the Interconnection Customer's Interconnection Facilities.

Fast Track Process – The procedure for evaluating an Interconnection Request for a certified Generating Facility that meets the eligibility requirements of Section 3.1.

FERC – The Federal Energy Regulatory Commission.

Generating Facility – The Interconnection Customer's device for the production and/or storage for later injection of electricity identified in the Interconnection Request, but shall not include the Interconnection Customer's Interconnection Facilities.

Good Utility Practice – Any of the practices, methods and acts engaged in or approved by a significant portion of the electric industry during the relevant time period, or any of the practices, methods and acts which, in the exercise of reasonable judgment in light of the facts known at the time the decision was made, could have been expected to accomplish the desired result at a reasonable cost consistent with good business practices, reliability, safety and expedition. Good Utility Practice is not intended to be limited to the optimum practice, method, or act to the exclusion of all others, but rather to be acceptable practices, methods, or acts generally accepted in the region.

Governmental Authority – Any federal, state, local or other governmental regulatory or administrative agency, court, commission, department, board, or other governmental subdivision, legislature, rulemaking board, tribunal, or other governmental authority having jurisdiction over the Parties, their respective facilities, or the respective services they provide, and exercising or entitled to exercise any administrative, executive, police, or taxing authority or power; provided, however, that such term does not include the Interconnection Customer, the Utility, or any affiliate thereof.

Interconnection Agreement – Means the South Carolina Generator Interconnection Agreement (See Attachment 10).

In-Service Date – The date upon which the construction of the Utility's facilities is completed and the facilities are capable of being placed into service.

ELECTRONICALLY FILED - 2019 April 22 5:05 PM - SCPSC - Docket # 2019-130-E - Page 32 of 63

ELECTRONICALLY FILED - 2019 April 22 5:05 PM - SCPSC - Docket # 2019-130-E - Page 33 of 63

Interconnection Customer – Any valid legal entity, including the Utility, that proposes to interconnect its Generating Facility with the Utility's System.

Interconnection Facilities – Collectively, the Utility's Interconnection Facilities and the Interconnection Customer's Interconnection Facilities. Collectively, Interconnection Facilities include all facilities and equipment between the Generating Facility and the Point of Interconnection, including any modification, additions or upgrades that are necessary to physically and electrically interconnect the Generating Facility to the Utility's System. Interconnection Facilities are sole use facilities and shall not include Upgrades.

Interconnection Facilities Delivery Date – The Interconnection Facilities Delivery Date shall be the date upon which the Utility's Interconnection Facilities are first made operational for the purposes of receiving power from the Interconnection Customer.

Interconnection Request – The Interconnection Customer's request, in accordance with these procedures, to interconnect a new Generating Facility, or to increase the capacity of, or make a Material Modification to, an existing Generating Facility that is interconnected with the Utility's System.

Material Modification – A modification to machine data or equipment configuration or to the interconnection site of the Generating Facility that has a material impact on the cost, timing or design of any Interconnection Facilities or Upgrades. Material Modifications include project revisions proposed at any time after receiving notification by the Utility of a complete Interconnection Request pursuant to Section 1.3.3 that 1) alters the size or output characteristics of the Generating Facility from its Utility-approved Interconnection Request submission; or 2) may adversely impact other Interconnection Requests with higher Queue Numbers.

Indicia of a Material Modification, include, but are not limited to:

- A change in Point of Interconnection (POI) to a new location, unless the change in a POI is on the same circuit less than two (2) poles away from the original location, and the new POI is within the same protection zone as the original location;
- A change or replacement of generating equipment such as generator(s), inverter(s), transformers, relaying, controls, etc. that is not a direct substitution in size, ratings, impedances, efficiencies or capabilities of the equipment specified in the original or preceding Interconnection Request;
- A change from certified to non-certified devices ("certified" means certified by an OSHA recognized Nationally Recognized Test Laboratory (NRTL), to relevant UL and IEEE standards, authorized to perform tests to such standards);
- A change of transformer connection(s) or grounding from that originally proposed;
- A change to certified inverters with different specifications or different inverter control specifications or set-up than originally proposed;

- An increase of the AC output of a Generating Facility; or
- A change reducing the AC output of the generating facility by more than 10%.

The following are not indicia of a Material Modification:

- A change in ownership of a Generating Facility; the new owner, however, will be required to execute a new Interconnection Agreement and study agreement(s) for any study which has not been completed and the report issued by the Utility.
- A change or replacement of generating equipment such as generator(s), inverter(s), solar panel(s), transformers, relaying, controls, etc. that is a direct substitution in size, ratings, impedances, efficiencies or capabilities of the equipment specified in the original or preceding Interconnection Request;
- An increase in the DC/AC ratio that does not increase the maximum AC output capability of the generating facility;
- A decrease in the DC/AC ratio that does not reduce the AC output capability of the generating facility by more than 10%.

Maximum Physical Export Capability Requested – The term shall mean the maximum continuous electrical output of the Generating Facility at any time at a power factor of approximately unity as measured at the Point of Interconnection and the maximum kW delivered to the Utility during any metering period.

Month – The term "Month" means the period intervening between readings for the purpose of routine billing, such readings usually being taken once per month.

Nameplate Capacity – The term "Nameplate Capacity" shall mean the manufacturer's nameplate rated output capability of the generator, based on alternating current (AC). For multi-unit generator facilities, the "Nameplate Capacity" of the facility shall be the sum of the individual manufacturer's nameplate rated output capabilities of the generators. For inverter-based Generating Facilities, the maximum rated capacity or "Nameplate Capacity" shall be the sum of the inverters maximum rated capacity AC in megawatts.

Net Capacity – The term "Net Capacity" shall mean the Nameplate Capacity of the Interconnection Customer's generating facilities, less the portion of that capacity needed to serve the Generating Facility's Auxiliary Load.

Net Power – The term "Net Power" shall mean the total amount of electric power produced by the Interconnection Customer's Generating Facility less the portion of that power used to supply the Generating Facility's Auxiliary Load.

Network Resource Interconnection Service – An Interconnection Service that allows the Interconnection Customer to integrate its Generating Facility with the Utility's System (1) in a manner comparable to that in which the Utility integrates its generating facilities to serve native load customers; or (2) in an RTO or ISO with market based

ELECTRONICALLY FILED - 2019 April 22 5:05 PM - SCPSC - Docket # 2019-130-E - Page 34 of 63

congestion management, in the same manner as Network Resources. Network Resource Interconnection Service in and of itself does not convey transmission service.

Network Upgrades – Additions, modifications, and upgrades to the Utility's Transmission System required to accommodate the interconnection of the Generating Facility to the Utility's System. Network Upgrades do not include Distribution Upgrades.

Office of Regulatory Staff – The Office of Regulatory Staff of South Carolina.

Operating Requirements – Any operating and technical requirements that may be applicable due to Regional Reliability Organization, Independent System Operator, control area, or the Utility's requirements, including those set forth in the Interconnection Agreement.

Party or Parties – The Utility, Interconnection Customer, and possibly the owner of an Affected System, or any combination of the above.

Point of Interconnection – The point where the Interconnection Facilities connect with the Utility's System.

Queue Number – The number assigned by the Utility that establishes an Interconnection Customer's Interconnection Request's position in the study queue relative to all other valid Interconnection Requests. A lower Queue Number will be studied prior to a higher Queue Number. The Queue Number of each Interconnection Request shall be used to determine the cost responsibility for the Upgrades necessary to accommodate the interconnection.

Queue Position – The order of a valid Interconnection Request, relative to all other pending valid Interconnection Requests, based on Queue Number.

Reasonable Efforts – With respect to an action required to be attempted or taken by a Party under the Interconnection Agreement, efforts that are timely and consistent with Good Utility Practice and are otherwise substantially equivalent to those a Party would use to protect its own interests.

South Carolina Generator Interconnection Procedures – The term "South Carolina Generator Interconnection Procedures" shall refer to the South Carolina Generator Interconnection Procedures, Forms, and Agreements for State-Jurisdictional Generator Interconnections as approved by the Public Service Commission of South Carolina.

Standard – The interconnection procedures, forms and agreements approved by the Commission for interconnection of Generating Facilities to Utility Systems in South Carolina.

Study Process – The procedure for evaluating an Interconnection Request that includes the Section 4 scoping meeting, system impact study, and facilities study.

ELECTRONICALLY FILED - 2019 April 22 5:05 PM - SCPSC - Docket # 2019-130-E - Page 35 of 63

System – The facilities owned, controlled or operated by the Utility that are used to provide electric service in South Carolina.

Utility – The entity that owns, controls, or operates facilities used for providing electric service in South Carolina.

Transmission System – The facilities owned, controlled or operated by the Utility that are used to transmit electricity in South Carolina.

Upgrades – The required additions and modifications to the Utility's System at or beyond the Point of Interconnection. Upgrades may be Network Upgrades or Distribution Upgrades. Upgrades do not include Interconnection Facilities.

ELECTRONICALLY FILED - 2019 April 22 5:05 PM - SCPSC - Docket # 2019-130-E - Page 36 of 63

Description and Costs of the Generating Facility, Interconnection Facilities, and Metering Equipment

Equipment, including the Generating Facility, Interconnection Facilities, and metering equipment shall be itemized and identified as being owned by the Interconnection Customer, or the Utility. The Utility will provide a best estimate itemized cost, including overheads, of its Interconnection Facilities and metering equipment, and a best estimate itemized cost of the annual operation and maintenance expenses associated with its Interconnection Facilities and metering equipment.

Charges for the Interconnection Facilities will begin on the In-Service Date specified in the Milestones in Appendix 4, regardless of whether the Generating Facility is interconnected or generating. If required, the Letter of Credit may be drawn upon to pay for the Interconnection Facilities charges.

Barnwell PV1, LLC ("Barnwell PV1" or "Facility") is a solar photovoltaic Generating Facility located near 5200 Patterson Mill Road in Barnwell, South Carolina. The Facility represents that it is a Qualifying Facility ("QF") as defined by the FERC Regulation 18 C.F.R. § 292.204. The Facility will comply with FERC Regulation 18 C.F.R. § 292.207 by serving South Carolina Electric & Gas Company ("SCE&G" or "Utility") with either: (1) a copy of the Facility's self-certification of qualifying facility status on Form No. 556; or (2) a copy of the Facility's application for FERC certification of qualifying facility status, which includes a Form No. 556, as well as any supplemental materials the Facility files in the corresponding docket at FERC and any FERC action taken with regard to the application.

The Facility consists of one thousand, five hundred Huawei SUN2000-45KTL-US-HV inverters and has a total nameplate capacity of 75,000 kW AC. Each inverter will be programmed such that the maximum allowable output shall not exceed its nameplate kW rating. The DC generating equipment consists of both Hanwha Q.PLUS L-G4.2 solar photovoltaic panels and Dynapower battery energy storage systems capable of 60 MW output. The Facility will interconnect to the existing SCE&G Barnwell – Salem Switching Station 115 kV line.

The Interconnection Customer's Interconnection Facilities will include a three phase gang-operated disconnect switch and the necessary conductor and terminations necessary to reach SCE&G's switch in the switching station. The Interconnection Customer's generator step up transformer will be a Delta – Wye winding configuration with Delta on the high side.

The Utility's Interconnection Facilities will include a tap off the Barnwell – Salem Switching Station 115 kV line and a 115 kV switching station with related equipment. The switching station shall include, but is not limited to, three circuit breakers, structures, foundations, switches, potential transformers, current transformers, batteries, metering, SCADA, station service, lightning arrestors, gravel, fencing and a ground grid. The equipment and its installation are estimated to cost $2,842,400. Further, Interconnection Customer will convey the switching station property to Utility, and agrees to subsequently enter into

ELECTRONICALLY FILED - 2019 April 22 5:05 PM - SCPSC - Docket # 2019-130-E - Page 37 of 63

Utility's standard Purchase and Sale Agreement in a form substantially similar to that in Attachment 7. The estimated cost assumes the switching station is adjacent to or within 600 feet of SCE&G's existing right of way. The estimated cost and the estimated time to complete the Interconnection Facilities assume that support pilings are not required in the Transmission Provider's switching station. If it is determined that support pilings are required, the estimated cost and time required to complete the switching station may increase.

The Interconnection Customer will pay to the Utility an Operations and Maintenance Fee each month. This fee will be based on the actual cost of the Interconnection Facilities installed by the Utility and is estimated to be $28,424 monthly. The Operations and Maintenance Fee will begin on the In-Service Date specified in the Milestones in Appendix 4.

The Interconnection Customer will pay the estimated Interconnection Facilities and Upgrades, in Appendix 6, which together total $15,787,400.00, which is the basis for the Milestone Payments in Appendix 4 of this Agreement. Failure to make the payment may result in the termination of the Generator Interconnection Agreement and the withdrawal of the Generator Interconnection Application.

The Interconnection Customer represents that it meets the safe harbor requirements of Treasury Notice 2016-36, *Transfers of Property to Regulated Public Utilities by Electric Generators*. As such, the payments for Interconnection Facilities and Upgrades made by the Interconnection Customer to the Utility will not be treated as a taxable Contribution In Aid of Construction ("CIAC") or give rise to taxable gross income. Should, in the future, the IRS, or another regulatory body, require the payments for Interconnection Facilities and Upgrades be treated in a manner that gives rise to taxable gross income, the Interconnection Customer will be responsible for the income tax impact to the Utility associated with that income. At such time, the Utility will compute the tax impacts and invoice the Interconnection Customer for that amount.

Should the Interconnection Customer terminate this Agreement pursuant to Article 3.3 and cancel its interconnection with and operation on the Utility's Transmission System for any reason, either during the initial term or any extension thereof, in addition to any disconnection costs identified in Article 3.3.3, the Interconnection Customer shall pay to the Utility a facilities termination charge equal to (a) the total installed cost of facilities directly assigned to the Interconnection Customer, (b) less any Interconnection Customer contribution to construction, (c) less accumulated depreciation of the facilities funded by the Utility, (d) less salvage value of all facilities directly assigned to the Interconnection Customer, (e) plus the cost of removal (including any associated environmental investigation/remediation costs related to a spill or release of hazardous substances caused by the Interconnection Customer or those paid or incurred by the Utility, which were not the result of negligence on the part of the Utility), all as determined by the Utility in accordance with its standard accounting practices; provided, however, that the termination charge shall not be less than zero. This charge is subject to Article 3.3.4.

ELECTRONICALLY FILED - 2019 April 22 5:05 PM - SCPSC - Docket # 2019-130-E - Page 38 of 63

The Utility may waive a portion or all of the termination charges where (1) a successor agreement is executed prior to termination of this Agreement, or (2) the Interconnection Customer is able to furnish the Utility with satisfactory evidence that a successor customer will occupy the premises within a reasonable time and contract for substantially the same service facilities. The termination charge above shall not preclude additional termination charges imposed by law.

ELECTRONICALLY FILED - 2019 April 22 5:05 PM - SCPSC - Docket # 2019-130-E - Page 39 of 63

One-line Diagram Depicting the Generating Facility, Interconnection Facilities, Metering Equipment, and Upgrades

This agreement will incorporate by reference the one-line diagram submitted by the Customer on 1/25/2019, dated 1/25/2019, with file name "Appendix 3-A Barnwell PV1, LLC SLD" as part of the Interconnection Request, or as subsequently updated and provided to the Company.

This one-line diagram is provided as Appendix 3-A to this Agreement. In addition, the Interconnection Customer will submit to the Utility an as-built one-line diagram within 30 Business Days of the final inspection by the Utility.

The figures below are the general arrangement of the SCE&G-owned 115 kV switching station.

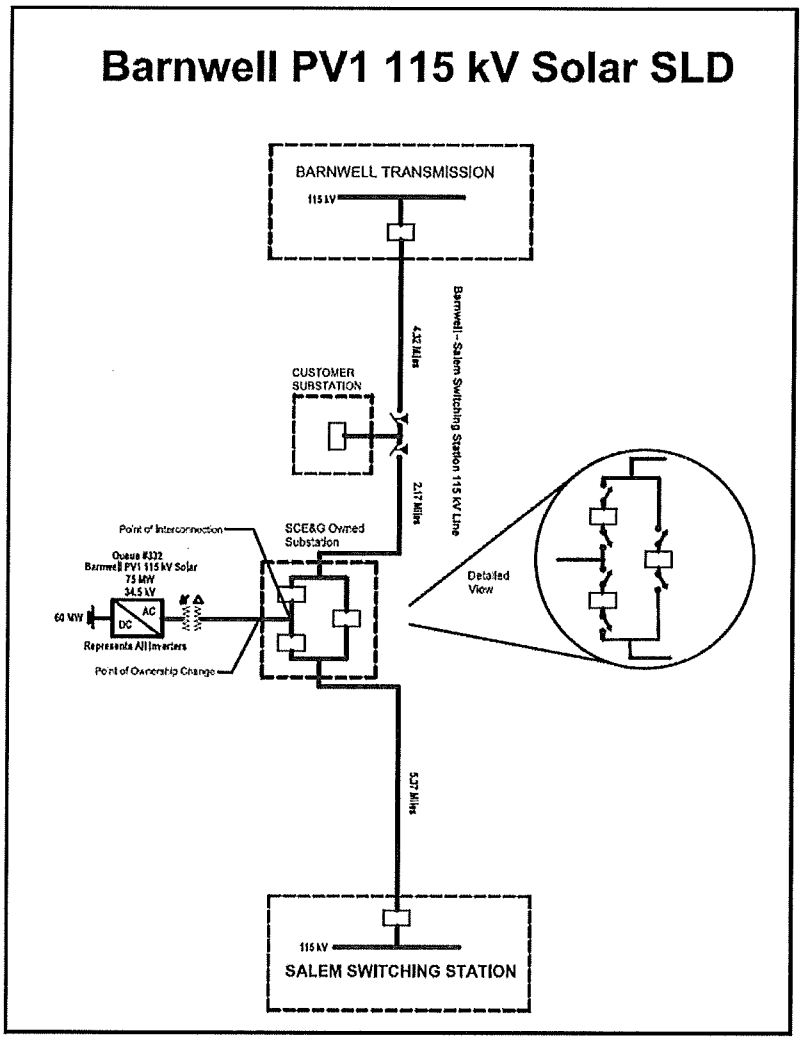

Engineer Single Line Layout for QF

ELECTRONICALLY FILED - 2019 April 22 5:05 PM - SCPSC - Docket # 2019-130-E - Page 40 of 63

The figure below is the typical arrangement of the SCE&G-owned switching station.

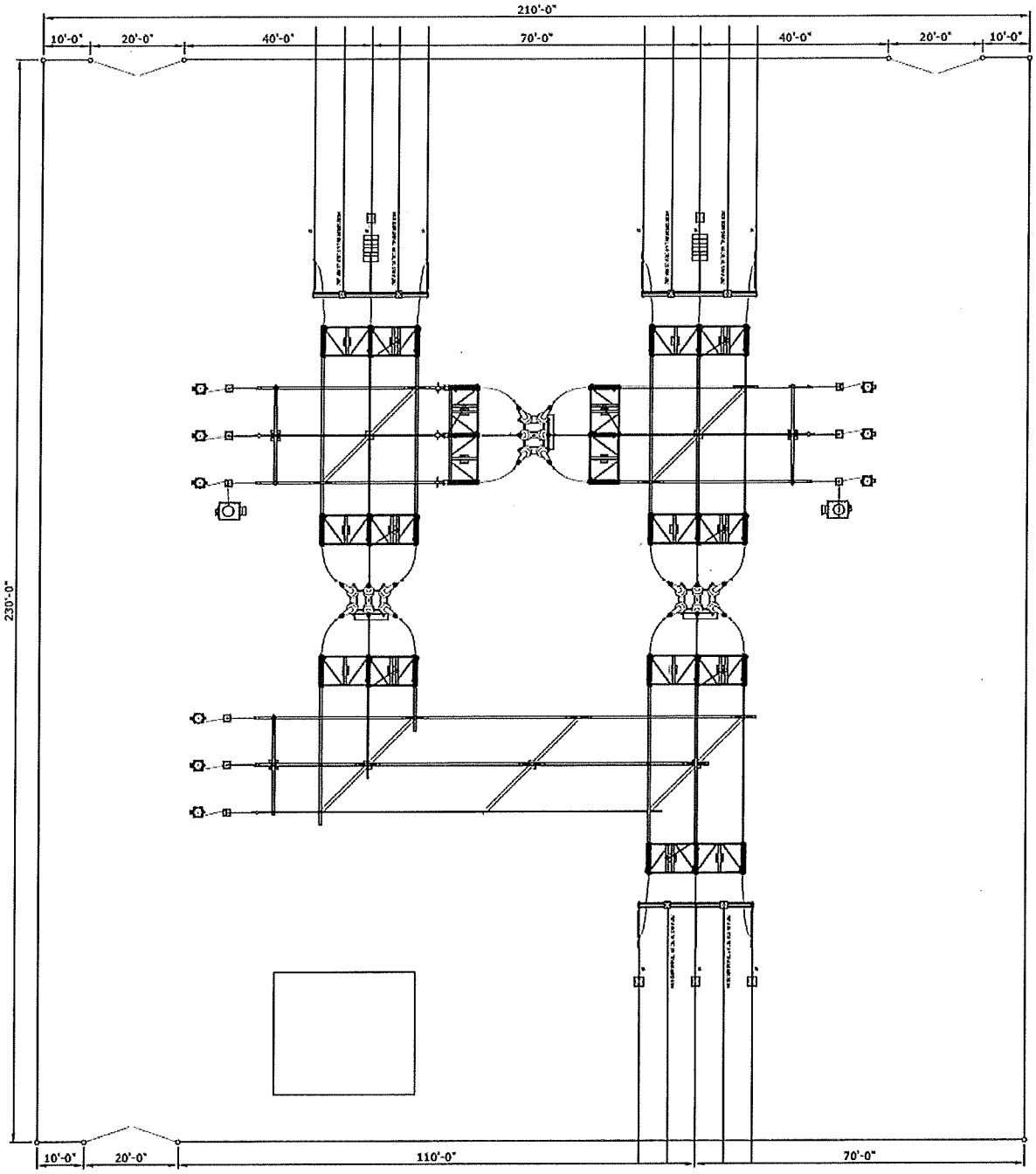

SCE&G owned 115 kV Switching Station – General Arrangement Plan

ELECTRONICALLY FILED - 2019 April 22 5:05 PM - SCPSC - Docket # 2019-130-E - Page 41 of 63

ELECTRONICALLY FILED - 2019 April 22 5:05 PM - SCPSC - Docket # 2019-130-E - Page 42 of 63

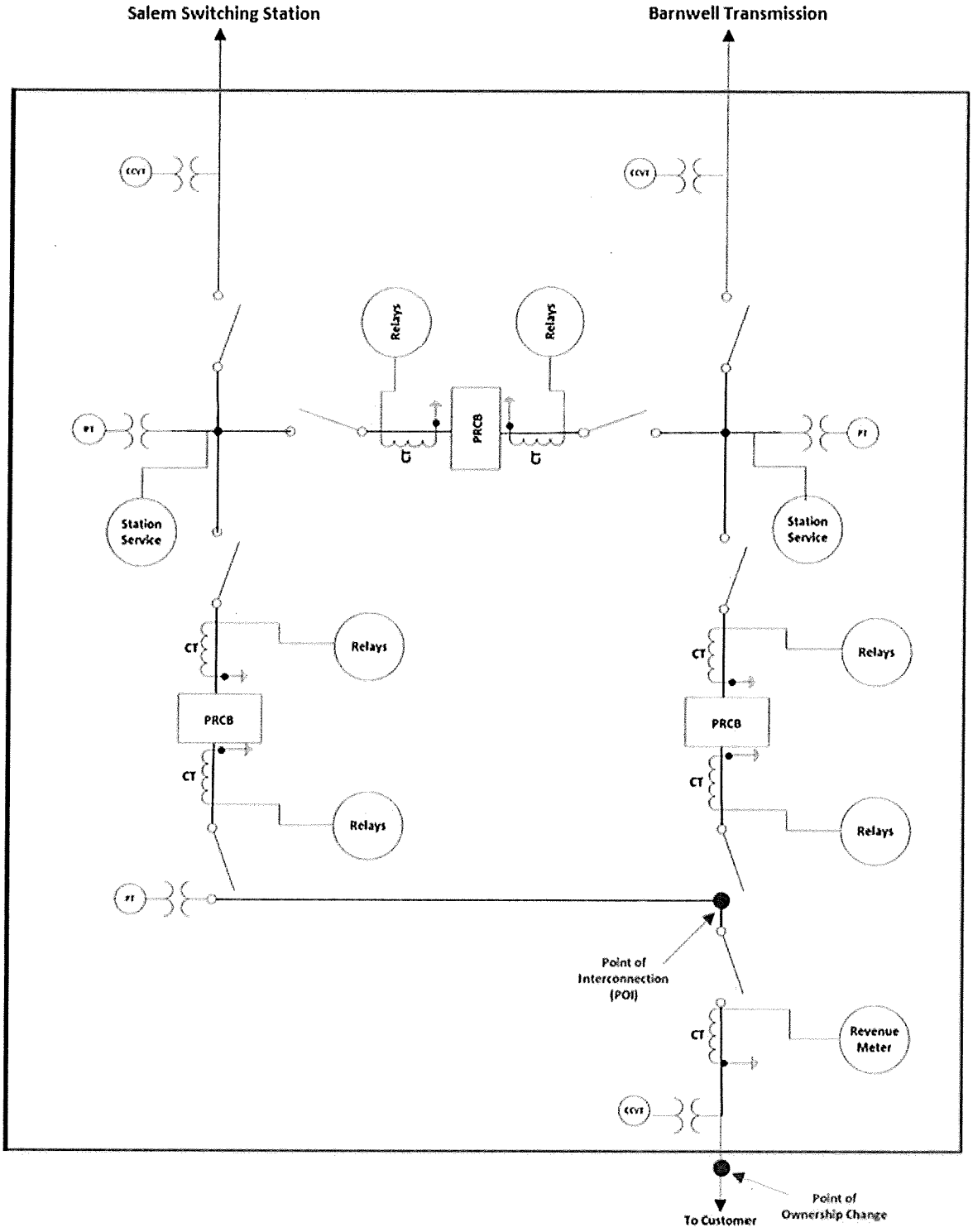

SCE&G owned 115 kV Switching Station – Single Line Diagram

ELECTRONICALLY FILED - 2019 April 22 5:05 PM - SCPSC - Docket # 2019-130-E - Page 43 of 63

Appendix 3-A

(Page Intentionally Left Blank)

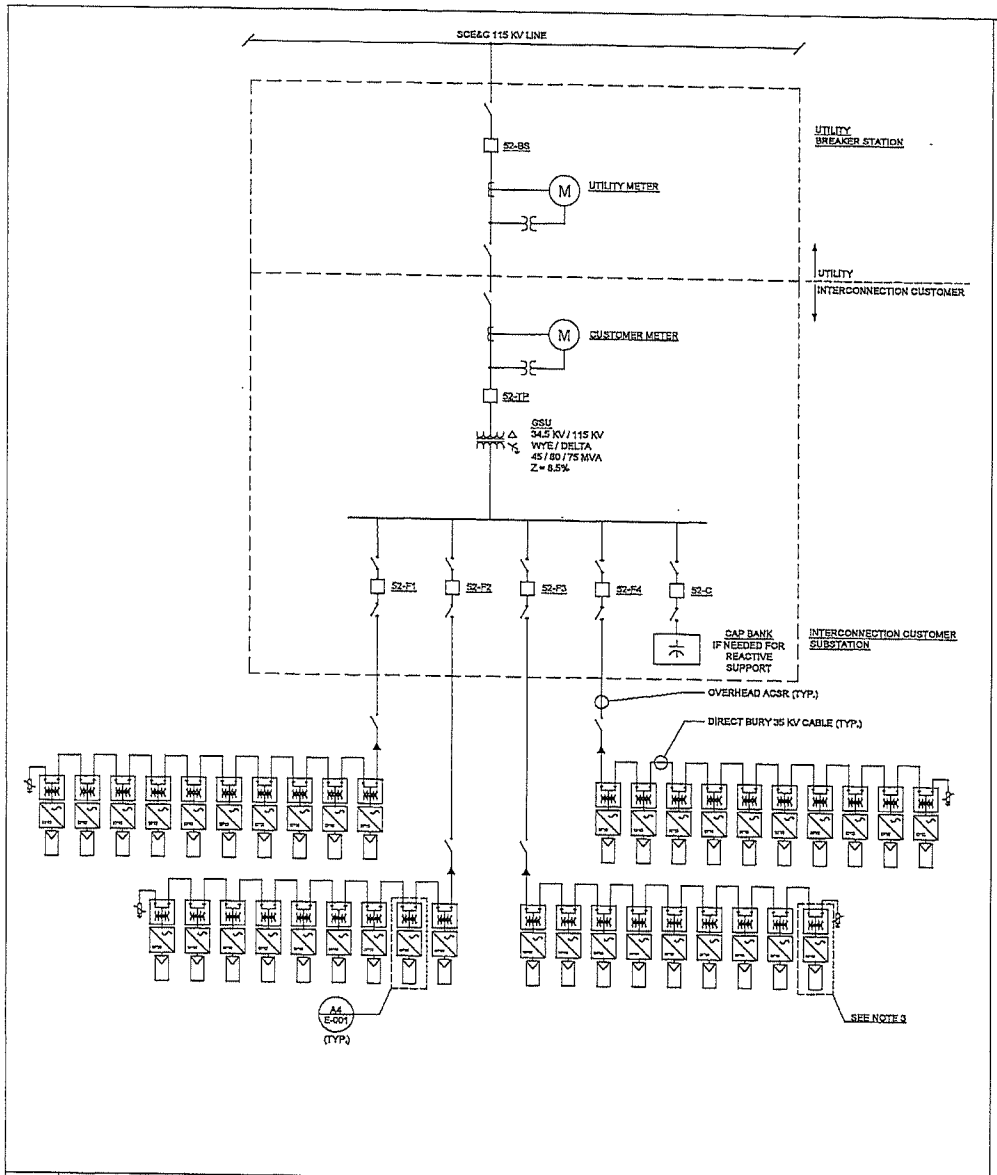

A1 SINGLE LINE DIAGRAM SCALE: NTS

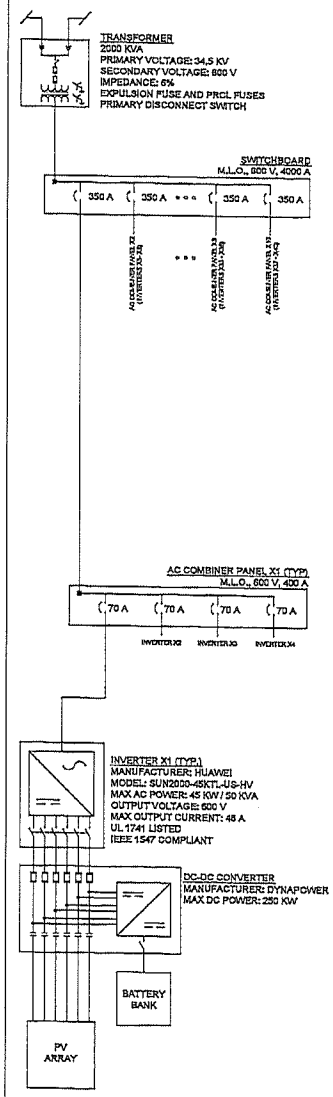

A4 2 MVA POWER BLOCK SCALE: NTS

SYSTEM CAPACITY

75 MW

EQUIPMENT

(1) 45 / 60 / 75 MVA GSU TRANSFORMER
(1500) HUAWEI SUN2000-45KTL-US-HV INVERTERS
(37) 2000 KVA Yg/yg TRANSFORMERS
(1) 1000 KVA Yg/Yg TRANSFORMER

INTERCONNECTION VOLTAGE: 115 KV

UTILITY: SCE&G

APPLICANT: FRESH AIR ENERGY II, LLC

D5 SYSTEM SUMMARY SCALE: NA

1. THE INVERTERS SHALL PROVIDE DYNAMIC REACTIVE CAPABILITY OF 0.95 LEADING TO 0.95 LAGGING AT THE POINT OF INTERCONNECTION.
2. THE CAPACITOR BANK SHALL OFFSET THE PLANT REACTIVE LOSSES FROM THE INVERTER STEP-UP TRANSFORMERS AND GSU TRANSFORMER. THE SIZING OF THE CAPACITOR BANK IS PRELIMINARY. THE CAPACITY OF THE CAPACITOR BANK WILL BE INCREASED TO THE MAXIMUM SIZE ALLOWED BY THE UTILITY IF THE UTILITY DETERMINES THAT THE CAPACITY INDICATED IS NOT SUFFICIENT TO MEET THE REACTIVE REQUIREMENTS AT THE POINT OF INTERCONNECTION.
3. ALL POWER BLOCKS ARE 2 MVA WITH 20 INVERTERS, EXCEPT FOR ONE 1 MVA POWER BLOCK WITH A 1 MVA TRANSFORMER AND 10 INVERTERS.
4. DC ARRAY SYSTEM SIZE AND CONFIGURATION MAY VARY BASED UPON FINAL DESIGN.
5. LOW VOLTAGE AC COLLECTION SYSTEM CONFIGURATION MAY VARY BASED UPON FINAL SYSTEM DESIGN.
6. MEDIUM VOLTAGE COLLECTION SYSTEM CONFIGURATION MAY VARY BASED UPON FINAL SYSTEM DESIGN.

ISSUED FOR:
INTERCONNECTION APPROVAL
NOT FOR CONSTRUCTION

B5 NOTES SCALE: NA

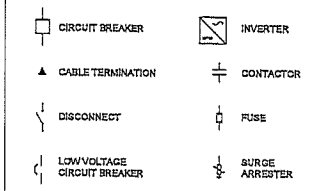

A5 SYMBOLS SCALE: NA

BRUCKE | ENGINEERING PLLC
100 E POPLAR AVE
CARRBORO, NC 27510
www.brukeengineering.com

SEAL:

DEVELOPER:

ecoplexus

ECOPLEXUS, INC.
101 2ND ST., STE. 1250
SAN FRANCISCO, CA 94105
www.ecoplexus.com

BARNWELL

BARNWELL, SC

ISSUED FOR: INTERCONNECTION APPROVAL NOT FOR CONSTRUCTION

ISSUED: 01/25/2019

DRAWN BY: PCB

REVISION #: 0

DRAWING:

SINGLE LINE DIAGRAM

E-001

SHEET 01 OF 01

Milestones

Requested Upgrade In-Service Date: October 14, 2022

Requested Interconnection Facilities In-Service Date October 14, 2022

Critical milestones and responsibility as agreed to by the Parties:

The build-out schedule does not include contingencies for deployment of Utility personnel to assist in outage restoration efforts on the Utility's system or the systems of other utilities with whom the Utility has a mutual assistance agreement. Consequently, the Requested In-Service Date may be delayed to the extent outage restoration work interrupts the design, procurement and construction of the requested facilities.

	Milestone	Completion Date	Responsible Party
(1)	Payment totaling $7,893,700.00 which is ½ of estimated charges	April 16, 2019	Interconnection Customer
(2)	Determine Survey Quality Coordinates of the substation and Utility owned Switching Station; Obtain any required easements or right-of-way obtained; complete transfer of ownership of switching station site to Utility	April 15, 2021	Interconnection Customer
(3)	Procurement of long lead time materials and any required easements or right-of-way obtained	May 14, 2021	Utility and Interconnection Customer
(4)	Site of Utility Facilities cleared and graded in accordance with SCE&G Customer Substation Guideline	January 13, 2022	Interconnection Customer
(5)	Payment totaling $7,893,700.00 which is ½ of estimated charges	January 13, 2022	Interconnection Customer
(6)	Completion of Firm Upgrades and Interconnection Facilities and Request for In-Service Inspection*	October 14, 2022	Utility and Interconnection Customer
(7)	In-Service Inspection*	October 28, 2022	Utility and Interconnection Customer
(8)	Interconnection Customer to remedy any items identified by Utility following completion of inspection*	November 14, 2022	Interconnection Customer
(9)	Facility Commissioning and Request Final Testing*	November 30, 2022	Interconnection Customer
(10)	Final inspection and approval for parallel operation*	December 7, 2022	Utility

***Milestone is contingent on the completion of the preceding milestones.**

Agreed to by:

ELECTRONICALLY FILED - 2019 April 22 5:05 PM - SCPSC - Docket # 2019-130-E - Page 45 of 63

For the Utility P. Xanthakos Date 2/5/19

Print Name: Pandelis N. Xanthakos

For the Interconnection Customer Date 2/11/2019

Print Name: John Gorman

ELECTRONICALLY FILED - 2019 April 22 5:05 PM - SCPSC - Docket # 2019-130-E - Page 46 of 63

Additional Operating Requirements for the Utility's System and Affected Systems Needed to Support the Interconnection Customer's Needs

The Utility shall also provide requirements that must be met by the Interconnection Customer prior to initiating parallel operation with the Utility's System. The Interconnection Customer shall maintain compliance with all applicable Operating Requirements during parallel operation with the Utility's System.

1. The Interconnection Customer will be required to obtain an electrical certificate of release from the local inspection authority, provided that the local inspection authority exercises jurisdiction over the Facility, prior to an initial interconnection, which must be submitted to the Utility. Where the local inspection authority declines to exercise jurisdiction over the Facility, the Interconnection Customer must provide Utility a written letter in lieu of inspection executed by the Interconnection Customer and a Professional Engineer or electrical contractor, licensed in the State of South Carolina. The local authority inspection or letter in lieu of inspection must be presented to the Utility in advance of the Utility's inspection and testing of the Interconnection Facilities and Facility.

2. Utility intends to allow the Interconnection Customer to continue normal operation of the Facility when a Hot Line Tag is issued on any networked transmission line. Should the Facility be interconnected to a radial transmission line, or a network line being operated as a radial, when a Hot Line Tag is issued on the radial transmission line to which the Facility is interconnected, Utility will require Interconnection Customer to disconnect the Facility from the Transmission System. Utility retains the right to implement special settings or relay logic at the interconnection device during Hot Line Tag conditions. Utility also retains the right to require the Interconnection Customer to disconnect the Facility from the Transmission System during Hot Line Tag conditions if Utility deems a special condition warrants such action.

3. If the Facility is interconnected to a radially fed portion of the Utility's System, the output from the Facility will have one designated path to the networked portion of the Utility's System. Should that designated path be unavailable for any reason, the Facility will be temporaily disconnected from the System until the designated path is restored.

4. Utility will install, at the Interconnection Customer's expense, a disconnecting device as part of the Utility's Interconnection Facilities to allow for isolation of the Facility during emergency restoration situations. Utility retains the right to disconnect the Facility at any time Utility deems it necessary to protect its Systems or for safety concerns. The Facility will be reconnected to Utility's Systems once the problem or issue has been corrected or repaired and Utility deems it safe to return to normal configuration.

5. Where Utility has installed and owns an interconnection protection device at the Point of Interconnection, the device will be set to operate with "one shot logic" in

ELECTRONICALLY FILED - 2019 April 22 5:05 PM - SCPSC - Docket # 2019-130-E - Page 47 of 63

order to disconnect the Facility in the case of a fault detected on the generator side of the Point of Interconnection. The device will be set to trip in the case of voltage or frequency fluctuations detected on the Facility side of the device. These threshold settings will be determined and set by the Utility Relay Engineering Department. The Interconnection Facilities will be returned to normal operation upon confirmation by the Interconnection Customer that the fault has been located and either isolated or repaired. The Interconnection Customer will be required to contact Utility and ensure all personnel and equipment are fully prepared to safely reconnect the Generation Facility to the Utility's Systems prior to Utility's System Control sending a close signal to the device. Utility retains the right to dispatch Utility personnel to the Facility to inspect the repair or ensure all personnel are in a safe position prior to the protection device being closed.

6. It is the intent of Utility that the Interconnection Customer and Utility work to program relay settings to coordinate the Interconnection Facilities with the Utility's Systems. The coordination will employ a tiered approach such that the relay settings in the inverter units will be coordinated with the Utility's protective device which in turn will be coordinated with the Utility's Systems. The Interconnection Customer's equipment will be responsible for protecting the Facility and inversely the Utility's protective device will be responsible for protecting the Utility's Systems.

7. Based on Good Utility Practices, the Facility will be required to come off line with any voltage or frequency fluctuations outside of the settings thresholds given to the Interconnection Customer by the Utility Relay Engineering Department. The Facility will remain off line until normal voltage and frequency on the Utility's System returns and maintains stability for a minimum of five minutes. This will serve to protect both Utility and the Facility equipment.

8. If a transfer trip scheme is required to be in place, the Interconnection Facilities protection device will disconnect the Facility upon operation of the feeder breaker upon which it has been placed. After the feeder breaker has been re-energized by Utility's System Control, the associated protection device will be placed back in the closed position and will reconnect the Facility.

9. The required relay settings for the Interconnection Facilities shall be set to match the set points and threshold schemes as determined by Utility's Relay Engineering Department and are project specific based on existing feeder settings and requirements. Utility retains the right to change the required settings of the Interconnection Facilities from time to time as system conditions warrant. In such case, the Utility will contact the Interconnection Customer, specifying the new setting requirements and the reasons for the necessary programming changes. The Interconnection Customer shall make every effort to complete the programming changes within five Business Days of being notified by Utility personnel.

ELECTRONICALLY FILED - 2019 April 22 5:05 PM - SCPSC - Docket # 2019-130-E - Page 48 of 63

10. For periodic testing by the Interconnection Customer, the Interconnection Customer shall provide the Utility with a minimum of five Business Days prior to the proposed testing date. Utility retains the right to require the Interconnection Customer to reschedule the testing, if necessary. Utility will be allowed to be present and witness this testing at its own option. A copy of the testing results shall be provided to Utility upon completion.

11. The Interconnection Customer is obligated to obtain and/or sign any required rights of way or easements necessary to perform the interconnection with Utility's Systems. Any rights of way that must be obtained from property owners other than the Interconnection Customer will be obtained and signed over to Utility as directed by Utility's Right of Way department. The Interconnection Customer shall provide and maintain improved access, suitable for passenger vehicles and Utility service trucks, to the disconnecting device and the Utility's Interconnection Facilities. Any locked gates or other restrictions to access between public rights of way and the disconnecting device and the Utility's Interconnection Facilities will include, in the locking mechanism, an SCE&G lock. The SCE&G lock will be provided by the Utility and is operable by authorized Utility employees.

12. The Interconnection Customer agrees to adhere to Utility's vegetation management guidelines for all construction and maintenance of Interconnection Facilities.

13. The Interconnection Customer agrees upon execution of this Generator Interconnection Agreement to maintain operation of its Facility so as to not adversely affect other Utility customers associated with the Utility's Systems. If adverse effects directly associated with the Facility become apparent, the Interconnection Customer shall be responsible for correcting the situation. This will be accomplished either by additional operating constraints as determined by Utility and the Interconnection Customer, corrections to existing Facility equipment, the addition of new Interconnection Facilities, or system upgrades to the Utility's Systems. These corrective measures will be the financial responsibility of the Interconnection Customer and will be agreed upon in advance by the Interconnection Customer and Utility.

14. Upon interconnection to the Utility's system, the Interconnection Customer will provide the Utility operational and forecast information consistent with Good Utility Practices. Such information will include, but is not limited to, maintenance schedules, availability updates (i.e., forced outages), and generation forecasts. Hourly generation forecasts shall be submitted each day for the following 10 days. Utility also anticipates that the data submittal requirements will change over time as dictated by industry needs and regulations.

15. The Interconnection Customer will, whenever possible consistent with Good Utility Practice, not schedule major maintenance in the months of June, July, August or September.

16. The Interconnection Customer will abide by all applicable reliability standards established by the North American Electric Reliability Corporation ("NERC").

ELECTRONICALLY FILED - 2019 April 22 5:05 PM - SCPSC - Docket # 2019-130-E - Page 49 of 63

17. Failure of the Interconnection Customer to comply with all the provisions herein can result in Utility determining the possibility of adverse system effects and could result in the disconnection of the Facility from Utility's Systems.

18. At the Utility's request, the Interconnection Customer shall provide information from irradiance meters to be installed by the Interconnection Customer. There shall be no less than one centrally located irradiance meter installed.

19. The grounding systems of the Facility's substation and the Utility's switching station must be bonded if they share a common fenceline or if utilizing certain bus differential relay schemes. The Facility is subject to the indemnification obligations provided in Article 7.3 for any such liability incurred to third parties in operating the Utility's circuit breaker. The Facility must install its own circuit breaker as a component of its Interconnection Facilities.

20. Section 3.4 describes a number of conditions upon which the Utility may temporarily disconnect the Interconnection Customer's Generating Facility from the Utility's System. Section 3.4.6 provides that Utility may disconnect from the Utility's System any Generating Facility that is not in compliance with the Standard or Operating Requirements, including the Operating Requirements specified in this Appendix 5. Without limiting the scope of Section 3.4, the Utility may disconnect or curtail the output of the Generating Facility when continued operation of the Generating Facility may:

    - require changes in the operation of hydroelectric resources located inside the Utility's Balancing Authority Area in a manner that could (i) constitute an Adverse Operating Effect, or (ii) result in the violation of Applicable Laws and Regulations, as such Applicable Laws and Regulations may be changed from time to time;

    - require changes in the planned output of a nuclear fueled generating facility located inside the Utility's Balancing Authority Area, to the extent the planned output is required for (i) the safest operation of the nuclear fueled generating facility, or (ii) the reliable operation of the Bulk Electric System;

    - interfere with Utility's ability to address system events that include load shed and black start;

    - interfere with Utility's ability to take actions needed to preserve the reliability of the Utility's System as well as the Bulk Electric System; or

    - result in the violation of Applicable Laws and Regulations, including those issued by the ERO, as such Applicable Laws and Regulations may be changed from time to time.

    The Utility provides the foregoing list for ease of reference for the Interconnection Customer; all such enumerated reasons have been and remain standard operating practice on the Utility's System. Due to the proliferation of variable renewable

ELECTRONICALLY FILED - 2019 April 22 5:05 PM - SCPSC - Docket # 2019-130-E - Page 50 of 63

energy resources on the Utility's System at the time of the execution of this Agreement, the Generating Facility should expect to experience curtailment based on one or more of the above referenced conditions.

ELECTRONICALLY FILED - 2019 April 22 5:05 PM - SCPSC - Docket # 2019-130-E - Page 51 of 63

ELECTRONICALLY FILED - 2019 April 22 5:05 PM - SCPSC - Docket # 2019-130-E - Page 52 of 63

Utility's Description of its Upgrades and Best Estimate of Upgrade Costs

The Utility shall describe Upgrades and provide an itemized best estimate of the cost, including overheads, of the Upgrades and annual operation and maintenance expenses associated with such Upgrades. The Utility shall functionalize Upgrade costs and annual expenses as either transmission or distribution related.

The Utility is currently developing upgrades to the Stevens Creek – Thurmond 115 kV tie line and the 477 ACSR portion of the Cope – Denmark 115 kV line. Absent the completion of the these upgrades, the addition of the output of the Facility will cause violations of the Utility's operational criteria. For this reason, the Stevens Creek – Thurmond 115 kV tie line and the 477 ACSR portion of the Cope – Denmark 115 kV line upgrades must be completed before the Facility may be interconnected to the Utility's system.

The Utility will install the following Upgrades associated with the interconnection of the Facility. This equipment and its installation are estimated to cost $12,945,000. The Interconnection Customer will pay the estimated amounts associated with the Utility's Interconnection Facilities and Upgrades for this Agreement as set forth in the Milestones provided in Appendix 4 of this Agreement.

- Upgrade approximately 14 miles of the Urquhart – Salem Switching Station 115 kV line between Urquhart and Jackson PV1 from 336 to 795 ACSR or equivalent conductor. This equipment and its installation are estimated to cost $8,910,000;
- Upgrade Relays at Barnwell Substation. This equipment and its installation are estimated to cost $60,000;
- Upgrade Relays at Salem Switching Station. This equipment and its installation are estimated to cost $60,000;
- Upgrade Edmund Switching Station – Owens Corning 115kV line (Edmund Switching Station to Pelion Tap Portion) total of 4.39 miles of existing 477 ACSR to 795 ACSR or equivalent. This equipment and its installation are estimated to cost $3,915,000;

Estimated Costs are based on the future required in-service date. Costs do not include site cost, site preparation, road access, Right of Way procurement, permitting or regulatory approval, if needed.

Equipment procurement assumes normal lead times for structures and major equipment and timing for construction to allow an off-peak outage of the transmission equipment involved. Time to Complete does not include time to acquire site and/or Right of Way if needed or delays in permitting or regulatory approval, if needed.

The evaluation of the impacts, in both the System Impact Study and Facilities Study, of the proposed Facility to the Transmission System included evaluations based on the

criteria in the NERC TPL Reliability Standards Table 1. These evaluations identified conditions that result in overloaded facilities; these conditions were not in the base case.

Despite these conditions and other operating conditions, the Facility may receive firm interconnection service but may be subject to transmission congestion charges or curtailment. Most of these conditions, and therefore the congestion charges associated with these identified conditions, may be mitigated by constructing the Optional Upgrades, as shown in the System Impact Study Report and the Facilities Study Report. The Interconnection Customer elected not to pursue the following Optional Upgrades:

- Upgrade approximately 32 miles of the Fairfax - Yemassee 115 kV line, from 336 ACSR conductor and structures to 795 ACSR or equivalent.
- Upgrade Line Terminal at Yemassee Substation.
- Upgrade approximately 24 miles of the Urquhart – Salem Switching Station 115 kV line, from Jackson PV1 to Salem Switching Station, from 336 ACSR to 795 ACSR or equivalent/ higher rated conductor.
- Upgrade the 795 ACSR portion of the Cope – Denmark 115 kV line to 1272 ACSR, approximately 7 miles.
- Upgrade Line Terminal at Cope Substation.
- Upgrade approximately 0.36 miles of the Canadys – Fairfax 115 kV line, from Fairfax to the Grant Allendale tap, from 477 ACSR to 795 ACSR conductor.

As indicated in the System Impact Study report, dated 9/7/2018, incorporating the output of the proposed Generating Facility into the day time minimum load cases resulted in Area Control Error (ACE) violations of the ERO reliability standards during certain load levels. These ACE violations occur because the amount of: (i) generation required to operate Utility's system in accordance with Good Utility Practice and Applicable Laws and Regulations, including those of the ERO and (ii) proposed generation currently in Utility's interconnection queues with a higher priority than this proposed Generating Facility has reached a quantity such that, in certain low-load and medium-load system conditions, generation supply would exceed system load. This is a non-solvable scenario for power system studies and a non-possible operating condition in real-time. As a result, the Generating Facility may be curtailed in such low-load and medium-load conditions. Additionally, should conditions change such that the Generating Facility may be able to continue production during low-load and medium-load conditions, the Utility or Generator Owner may initiate a new System Impact Study of the Generation Facility. Based on this new study, additional Upgrades may be required in order to accommodate the Generating Facility during these conditions. Consistent with Article 5.2, the cost of any Upgrades identified in the new study attributable to the Generating Facility shall be borne by the Interconnection Customer.

ELECTRONICALLY FILED - 2019 April 22 5:05 PM - SCPSC - Docket # 2019-130-E - Page 53 of 63

ELECTRONICALLY FILED - 2019 April 22 5:05 PM - SCPSC - Docket # 2019-130-E - Page 54 of 63

STATE OF SOUTH CAROLINA	)	
	)	AGREEMENT OF SALE
COUNTY OF _____	)	AND PURCHASE
	)	(1031-EXCHANGE APPLICABLE)

THIS AGREEMENT is made effective as of the Effective Date as defined herein, by and between South Carolina Electric & Gas Company, a South Carolina corporation ("SCE&G"), and _____, a _____ ("Seller"). SCE&G and Seller may be individually referred to herein as "Party" or jointly as the "Parties."

1. OFFER. For and in consideration of mutual promises and obligations specified herein, SCE&G agrees to buy, and Seller agrees to sell the within-described property, subject to the terms and conditions hereinafter set forth.

2. DESCRIPTION: Said property is situated in the County of _____, State of South Carolina (the "Property") and is described as follows:

> All that certain piece, parcel or tract of land, located in the County of _____, State of South Carolina, containing an aggregate of _____ (_____) acres, more or less, located off of _____ and shown on **Exhibit A** attached hereto and incorporated herein.
>
> TMS Number: _____

3. TITLE. Seller agrees to convey marketable title and to deliver a general warranty deed in proper form for recording with all necessary transfer taxes paid and free and clear of liens and encumbrances. This sale includes all personal property attached to the Property and fixtures therein.

4. PURCHASE PRICE. The Purchase Price is _____ and No/100 Dollars ($_____.00), to be paid by SCE&G as follows: _____ and No/100 Dollars ($_____.00) as Earnest Money to be paid to Seller in trust with SCE&G's closing attorney, within ten (10) business days of the receipt of a fully executed contract and the balance of the Purchase

Price to be paid upon delivery of a deed as herein provided. At the consummation of this sale, the Earnest Money deposit shall be credited to SCE&G. The Earnest Money check shall be made payable to SCE&G's Closing attorney as noted herein (wiring instructions are attached as **Exhibit B**.) The balance of the Purchase Price shall be due at Closing.

5. INSPECTION PERIOD. SCE&G shall be entitled during the one-hundred eighty (180) day period from the last signature date (the "Effective Date" as defined in *Section 7 – Effective Date and Closing Requirements* herein) of this Agreement (the "Inspection Period") herein to make an inspection and study regarding the Property to investigate whether, in SCE&G's sole discretion, the Property is suitable for SCE&G's contemplated use, including but not limited to the examination of title resulting in a commitment for title insurance by a title insurance company, the making of inquiries into such matters as zoning, land use, the availability of necessary utilities, the physical characteristics, attributes and detriments of the Property itself, the absence of environmentally adverse conditions affecting the Property, the availability of licenses, including State, Federal, Board and local approvals, Board of Directors approval, matters shown on the survey to be obtained by SCE&G and such other matters as SCE&G shall, in its sole discretion, determine relevant. During the Inspection Period, SCE&G, its agents and contractors, shall have the right to enter upon the Property for the purpose of making such inspections and tests as SCE&G solely determines necessary to decide whether or not it wishes to purchase the Property in accordance with the terms of this Agreement, including environmental Phase I and Phase II tests, the latter of which will require reporting results to the South Carolina Department of Health and Environmental Control, a copy of such report SCE&G will concurrently provide to Seller. SCE&G shall be responsible to restore the Property to the condition which existed prior to the making of such tests if SCE&G should elect not to purchase the Property. SCE&G shall indemnify and hold Seller harmless from any loss, cost or expense including reasonable attorneys' fees resulting from claims made against Seller or the Property which are directly attributable to the acts or negligence of SCE&G during the exercise of the rights granted hereunder during the Inspection Period. Notwithstanding the foregoing, SCE&G shall have no liability to Seller as a result of the discovery or release of any toxic or hazardous substance existing on the Property prior to the time SCE&G conducts its inspections. If SCE&G shall not elect to proceed with the purchase of the Property for any reason within its sole discretion, it shall notify Seller in writing in accordance with *Section 17* -

ELECTRONICALLY FILED - 2019 April 22 5:05 PM - SCPSC - Docket # 2019-130-E - Page 55 of 63

Notices of its intention on or before the expiration of the Inspection Period. SCE&G's election not to proceed shall not be regarded as a "default" under *Section 16.1 – SCE&G's Default* hereof. Should SCE&G not proceed to purchase the Property, all Earnest Money will be returned to SCE&G and this Agreement will be null and void. If SCE&G elects to proceed with the purchase of the Property, the entire Earnest Money deposit will be applied to the Purchase Price of the Property. In the event that SCE&G does not duly render notice of its intention not to purchase the Property, it shall be deemed to have consented to the purchase of the Property in accordance with the terms of the following Sections. Notwithstanding the foregoing, SCE&G may determine in its sole and absolute discretion that it has made suitable inquiries regarding the Property and may waive any time that it may have remaining under the Inspection Period and proceed to Closing on a date acceptable to the Parties.

6. SURVEY. A survey of the Property is being prepared by the Seller for Closing purposes and shall be relied upon in the preparation of the legal description of the Property to be contained in the deed of conveyance.

7. EFFECTIVE DATE AND CLOSING REQUIREMENTS. The Effective Date of this Agreement shall be the last signature date thereon. The Closing shall take place at the offices of SCE&G's Closing attorney fifteen (15) days after the end of the Inspection Period, unless otherwise agreed to by both Parties in writing. However, if the South Carolina Public Service Commission ("SCPSC"), FERC and/or Board of Directors approval is required and not obtained prior to the scheduled Closing in accordance with *Section 18 – Approvals* hereof, Seller and SCE&G shall agree to extend the Closing until such a determination is made. All Closing expenses shall be paid by the Party normally paying them in the area in which the Property is located.

8. TAXES. Property taxes, and other assessments that may apply to the Property, shall be adjusted as of the date of Closing between SCE&G and Seller for the current year. Tax prorations pursuant to this Agreement are to be based on the tax information available at the date of Closing and are to be prorated on that basis. Seller will be responsible for payment of all rollback taxes at the time of assessment.

ELECTRONICALLY FILED - 2019 April 22 5:05 PM - SCPSC - Docket # 2019-130-E - Page 56 of 63

9. PROFESSIONAL SERVICES FEES. Each Party shall pay the fees of any broker, realtor, property advisor, or attorney, if any, it has engaged in the connection with this transaction, and shall defend, indemnify and hold harmless the other party from any liability related thereto.

10. TITLE DEFECTS.

10.1. On or before Closing, Seller will do, make, execute and deliver all such additional and further acts, deeds, instruments and documents as may be reasonably required by SCE&G to completely vest in and assure to SCE&G full rights in or to the Property. In the event of a defect of title that Seller is not aware of following the close of the Inspection Period that the Seller elects not to cure and that SCE&G does not otherwise agree to waive, SCE&G may declare this Agreement null and void with full refund of Earnest Money and reimbursement by Seller of those reasonable and customary out of pocket expenses actually incurred by SCE&G in connection with this Agreement up to the discovery of such title defect.

10.2. Seller will cause the Property to be released from all mortgages, deeds of trust, deeds to secure debt, security agreements, financing statements and all other security interests relating to existing indebtedness that is secured in whole or in part by the Property.

11. DEED RESTRICTIONS. This conveyance shall be made subject to any and all existing reservations, easements, encroachments, restrictions, covenants, zoning, governmental regulations, land use regulations, and rights-of-way, which may affect the Property which may be evident upon visible inspection of the Property and/or as shown on the Plat.

12. POSSESSION. SCE&G shall have the right of occupancy immediately at Closing. Seller agrees to deliver the property free of debris and in a clean condition. The Property shall be maintained in the same condition from the effective date of this Agreement until possession is delivered, ordinary wear and tear excepted. Seller shall provide adequate security in order to maintain the current condition of any improvements on the Property until Closing.

ELECTRONICALLY FILED - 2019 April 22 5:05 PM - SCPSC - Docket # 2019-130-E - Page 57 of 63

13. FIRE OR CASUALTY. In case the Property herein referred to is destroyed wholly or partially by fire or other casualty, Seller shall give notice thereof to SCE&G as soon as possible in accordance with the Notice provision of *Section 17 - Notices* below, and SCE&G shall have the option for ten (10) days after the effective date of notice of proceeding hereunder, with an agreed adjustment in the purchase price, or of terminating this Agreement and being repaid all amounts paid hereunder.

14. ASSIGNMENT OF OTHER CONTRACT RIGHTS AND ITEMS. At Closing, Seller shall deliver to SCE&G an assignment of such lease, contract rights, warranties and other items relating to the Property unless otherwise agreed upon by both parties in writing.

15. ZONING. This sale is conditioned upon the Property being zoned such that SCE&G's intended use is not prohibited.

16. DEFAULT. The remedies of the Parties in the event of default are as follows:

16.1. SCE&G's Default: In the event of default by SCE&G under the term of this Agreement, including but not limited to SCE&G's failure to purchase the Property by said Closing date, Seller's sole remedy shall be to immediately receive SCE&G's Earnest Money deposit as well as reimbursement by SCE&G for all reasonable and customary out of pocket expenses actually incurred by Seller in connection with this Agreement, through the date of default.

16.2. Seller's Default: In the event of default by Seller under the term of this Agreement, including but not limited to Seller's failure to sell the Property by said Closing date, SCE&G's sole remedy shall be to immediately receive a refund of its Earnest Money deposit as well as reimbursement by Seller for all reasonable and customary out of pocket expenses actually incurred by SCE&G in connection with this Agreement up to the date of default related to SCE&G's inspections and conduct of its due diligence of the Property or at SCE&G's sole discretion, sue for specific performance or for any other remedy at law or equity. In the event of Seller's default, this Agreement may be terminated.

ELECTRONICALLY FILED - 2019 April 22 5:05 PM - SCPSC - Docket # 2019-130-E - Page 58 of 63

17. NOTICES. All notices required or permitted to be given pursuant to this Agreement shall be in writing and shall be effective upon: personal delivery to the Party to whom they are addressed; or, upon receipt/confirmation, if sent via e-mail or facsimile to the email addresses/facsimile numbers indicated below; or, if mailed, five (5) days following deposit in the United States mail first class postage prepaid, registered or certified to the addresses indicated below; or, if sent by nationally recognized overnight courier, the date when signed for at addressee's residence or place of business and addressed to each Party at the following address:

SCE&G:

_____

South Carolina Electric & Gas Co.
220 Operation Way, Mail Code D112
Cayce, South Carolina 29033
Email: _____@scana.com
Telephone: (803) 217-_____
Facsimile: (803) 217-_____

Copy to:

_____
_____
_____
_____

Seller:

_____

_____

_____

Email: _____
Telephone: (___) _____
Facsimile: _____

18. GOVERNING LAW. This Agreement shall be governed and construed in accordance with the laws of the State of South Carolina, exclusive of its choice of law rules.

19. APPROVALS. The obligations of SCE&G hereunder are conditional upon SCE&G's receiving approval from its Board of Directors' Special Property Committee and/or Board of Directors, the South Carolina Public Service Commission ("SCPSC"), the FERC and any other regulatory body that may have authority over the sale of this Property. Such approval will be sought by SCE&G as soon as practicable after the Effective Date of this Agreement. The approvals contemplated by this section may be waived by SCE&G to the extent permitted by law. In the event SCPSC, FERC and/or Board approval is required and has not been obtained

ELECTRONICALLY FILED - 2019 April 22 5:05 PM - SCPSC - Docket # 2019-130-E - Page 59 of 63

prior to the scheduled Closing, Seller and SCE&G shall agree to extend the Closing until SCPSC, FERC and/or Board renders its determination.

20. COOPERATION OF PARTIES. Both Parties agree that they will cooperate in the negotiation, preparation and execution of all documents required to effectuate the transaction contemplated herein.

21. 1031 EXCHANGE. SCE&G and Seller acknowledge that in connection with Closing the transaction which is the subject of this Agreement, if any, either Party hereto may be participating in and/or consummating a tax-deferred like kind exchange of property under Section 1031 of the Internal Revenue Code of 1986, as amended, including a "reverse exchange." Each Party agrees to reasonably cooperate with the other and to execute all documents reasonably necessary to accomplish such exchange, provided that the cooperating Party's obligation and liabilities upon consummation of such exchange do not exceed its obligations under this Agreement, and that the Party effectuating such exchange shall hold the cooperating Party harmless from any claims or liabilities arising from such exchange in excess of the cooperating Party's obligations under this Agreement. Seller agrees and consents to SCE&G's assignment of its rights to purchase the Property to a Qualified Intermediary, in the event that SCE&G elects to use a Section 1031 Tax Deferred Exchange for the purchase of the Property.

22. FACSIMILE. Both Seller and SCE&G agree that receipt of a signed Agreement by facsimile or other electronically scanned images, as agreed to by SCE&G, shall be the same as receipt of an original signed Agreement.

23. COUNTERPARTS. So that each Party may have an original of this Agreement, this document shall be executed in two or more identically worded counterparts. Further, both SCE&G and Seller agree that receipt of a signed Agreement by facsimile shall be the same as receipt of an original signed Agreement.

24. SURVIVAL OF PROVISIONS. The provisions of this Agreement which are not fully executed by the Closing of this transaction, including without limitation the following: *Section 4*

ELECTRONICALLY FILED - 2019 April 22 5:05 PM - SCPSC - Docket # 2019-130-E - Page 60 of 63

– *Title; Section 7 – Effective Date and Closing Requirements; Section 8 – Taxes; Section 9 – Professional Services Fees; Section 10 – Title Defects;* and *Section 16 – Default* through *Section 23 – Counterparts,* shall survive the closing and remain in full force and effect, enforceable by the parties according to such terms.

25. TIME IS OF THE ESSENCE. Time shall be of the essence in the performance of the terms and conditions of this Agreement.

26. SEVERABILITY. Any term of this Agreement held to be illegal or invalid will be held as if it had never existed, and the remainder of the Agreement will remain legal and valid.

27. ENTIRE CONTRACT; BINDING CONTRACT. This Agreement expresses the entire agreement between the Parties, and there is no other agreement, oral or otherwise, modifying the terms hereunder and the Agreement shall be binding on both Parties, their principals, heirs, personal representatives, successors, and assigns as state law permits. This Agreement shall only be amended by a written agreement signed by both Parties.

WITNESS the Parties hereby by their hands and seals the dates indicated below.

SOUTH CAROLINA ELECTRIC & GAS COMPANY

_____
Witness

_____
Witness

By: _____
Print Name: _____
Its: _____
Date: _____

_____
Witness

_____
Witness

By: _____
Print Name: _____
Its: _____
Date: _____

ELECTRONICALLY FILED - 2019 April 22 5:05 PM - SCPSC - Docket # 2019-130-E - Page 61 of 63

EXHIBIT A

ATTACH SURVEY

ELECTRONICALLY FILED - 2019 April 22 5:05 PM - SCPSC - Docket # 2019-130-E - Page 62 of 63

EXHIBIT B

ATTACH WIRING INSTRUCTIONS

ELECTRONICALLY FILED - 2019 April 22 5:05 PM - SCPSC - Docket # 2019-130-E - Page 63 of 63