EXHIBIT B

BELLSOUTH® / CLEC Agreement

Customer Name: Sprint Communications Co., L.P and Sprint Spectrum, L.P.

Sprint Communications Co. and Sprint Spectrum CMRS and CLEC Interconnection Agreement	2
Table of Contents	3
General Terms and Conditions	5
General Terms and Conditions - Exhibit A	30
Signature Page	31
Att 1 - Resale	32
Att 1 - Resale Discounts & Rates	49
Att 2 - Network Elements and Other Services	58
Att 2 - Network Element Rates - Exh A	104
Att 2 - Network Element Rates - Exh B	328
Att 3A - CMRS Network Interconnection	338
Att 3B - CLEC Network Interconnection	355
Att 3 - Network Interconnection Rates - Exh A	384
Att 4 - Collocation	402
Att 4 - Collocation Rates - Exh B	451
Att 5 - Number Portability	496
Att 6 - Ordering Provisioning Maintenance Repair	503
Att 7 - Billing	512
Att 8 - Rights of Way	523
Att 9 - Service Quality Measurements	569
Att 10 - Disaster Recovery Plan	571
Att 11 - BFR and NBR	580

Note: This page is not part of the actual signed contract/amendment, but is present for record keeping purposes only.

Interconnection Agreement

Between

BellSouth Telecommunications, Inc.
d/b/a
AT&T Alabama
AT&T Florida
AT&T Georgia
AT&T Kentucky
AT&T Louisiana
AT&T Mississippi
AT&T North Carolina
AT&T South Carolina
AT&T Tennessee

and

Sprint Communications L.P.
Sprint Spectrum L.P.

TABLE OF CONTENTS

General Terms and Conditions

Definitions

1. Purpose

2. Certification

3. Term of the Agreement

4. Nondiscriminatory Access .

5. Court Ordered Requests for Call Detail Records and Other Subscriber Information

6. Liability and Indemnification

7. Intellectual Property Rights and Indemnification

8. Treatment of Proprietary and Confidential Information

9. Publicity

10. Resolution of Disputes

11. Taxes

12. Force Majeure

13. Modification of Agreement

14. Reservation of Legal Rights

15. Indivisibility

16. Severability

17. Non-Waivers

18. Governing Law

19. Assignments and Transfers

20. Notices

21. Rule of Construction

22. Headings of no Force or Effect

23. Multiple Counterparts

24. Filing of Agreement

25. Compliance with Law

26. Necessary Approvals

27. Good Faith Performance

28. Rates

29. Rate True-Up

30. Survival

31. Entire Agreement

TABLE OF CONTENTS (cont'd)

Attachment 1 - Resale

Attachment 2 - Network Elements and Other Services

Attachment 3A - Network Interconnection – CMRS

Attachment 3B – Network Interconnection - CLEC

Attachment 4 - Collocation

Attachment 5 - Access to Numbers and Number Portability

Attachment 6 - Pre-Ordering, Ordering, Provisioning and Maintenance and Repair

Attachment 7 - Billing

Attachment 8 - Rights-of-Way, Conduits and Pole Attachments

Attachment 9 - Service Quality Measurements

Attachment 10 - BellSouth Disaster Recovery Plan

Attachment 11 - Bona Fide Request and New Business Request Process

AGREEMENT
GENERAL TERMS AND CONDITIONS

THIS INTERCONNECTION AND RESALE AGREEMENT is made by and between AT&T Telecommunications, Inc., d/b/a AT&T Alabama, AT&T Florida, AT&T Georgia, AT&T Kentucky, AT&T Louisiana, AT&T Mississippi, AT&T North Carolina, AT&T South Carolina and AT&T Tennessee ("AT&T"), a Georgia corporation, Sprint Communications Company Limited Partnership a/k/a Sprint Communications Company L.P., a Delaware Limited Partnership (Sprint CLEC) and Sprint Spectrum L.P., a Delaware Limited Partnership, as agent and General Partner for WirelessCo, L.P., a Delaware limited partnership, and as agent for SprintCom, Inc., a Kansas corporation, and as agent for the entities identified as Affiliates on Exhibit A (Sprint Spectrum L.P., WirelessCo, L.P., SprintCom, Inc. and all entities identified as Affiliates on Exhibit A are collectively referred to as "Sprint PCS"). When the terms and conditions apply to both Sprint CLEC and Sprint PCS, the collective term "Sprint" shall be used. Otherwise, the applicable Party shall be identified. This Agreement may refer to either AT&T or Sprint or both as a "Party" or "Parties", and shall be effective on the Effective Date, as defined herein.

W I T N E S S E T H

WHEREAS, AT&T is a local exchange telecommunications company authorized to provide Telecommunications Services (as defined below) in the states of Alabama, Florida, Georgia, Kentucky, Louisiana, Mississippi, North Carolina, South Carolina and Tennessee; and

WHEREAS, Sprint Communications Company Limited Partnership is or seeks to become a CLEC authorized to provide telecommunications services in the state of Florida and Sprint Communications Company L. P. is a CLEC authorized to provide telecommunications services in the states of Alabama, Georgia, Kentucky, Louisiana, Mississippi, North Carolina, South Carolina, and Tennessee; and

WHEREAS, Sprint PCS is or seeks to become a Commercial Mobile Radio Service (CMRS) provider licensed by the Federal Communications Commission (FCC) to provide CMRS in the states of Alabama, Florida, Georgia, Kentucky, Louisiana, Mississippi, North Carolina, South Carolina and Tennessee; and

WHEREAS, pursuant to Sections 251 and 252 of the Act, Sprint wishes to purchase certain services from AT&T; and

WHEREAS, the Parties wish to interconnect their facilities, exchange traffic, and perform Local Number Portability (LNP) pursuant to Sections 251 and 252 of the Act as set forth herein; and

NOW THEREFORE, in consideration of the terms and agreements contained herein, AT&T and Sprint mutually agree as follows:

Definitions

Affiliate is defined as a person that (directly or indirectly) owns or controls, is owned or controlled by, or is under common ownership or control with, another person. For purposes of this paragraph, the term "own" means to own an equity interest (or equivalent thereof) of more than ten percent (10%).

Commission is defined as the appropriate regulatory agency in each state of AT&T's Southeast nine-state region (Alabama, Florida, Georgia, Kentucky, Louisiana, Mississippi, North Carolina, South Carolina, and Tennessee).

Competitive Local Exchange Carrier (CLEC) means a carrier that is a non-incumbent local exchange carrier authorized by the Commission to provide local exchange service within the states covered by this Agreement.

Effective Date is defined as the date that the Agreement is effective for purposes of rates, terms and conditions and shall be thirty (30) days after the date of the last signature executing the Agreement. Future amendments for rate changes will also be effective thirty (30) days after the date of the last signature executing the amendment.

FCC means the Federal Communications Commission.

Telecommunications means the transmission, between or among points specified by the user, of information of the user's choosing, without change in the form or content of the information as sent and received.

Telecommunications Service means the offering of telecommunications for a fee directly to the public, or to such classes of users as to be effectively available directly to the public, regardless of the facilities used.

Telecommunications Act of 1996 (Act) means Public Law 104-104 of the United States Congress effective February 8, 1996. The Act amended the Communications Act of 1934 (47 U.S.C. Section 1 et. seq.).

1. Purpose

This Agreement specifies the rights and obligations of the Parties with respect to the establishment of local interconnection, the resale of Telecommunications Services, and the purchase of unbundled network elements (UNEs) and other services. This Agreement is entered into by AT&T, Sprint CLEC, and Sprint PCS as the result of negotiation and compromise for the sole purpose of establishing a single interconnection arrangement between the three entities. As such the Parties intend for this Agreement to be applicable to both the CLEC and wireless interconnection arrangements as a single unified interconnection arrangement. If

Sprint ceases to use this Agreement for both CLEC and CMRS interconnection because it divested itself of either all CLEC or all CMRS assets throughout AT&T territory, the Parties will amend this Agreement to remove provisions rendered inapplicable by Sprint's divestiture.

2 Certification

2.1 To the extent not already provided by Sprint, Sprint agrees to provide AT&T in writing Sprint's CLEC certification from the Commission for all states covered by this Agreement except Kentucky prior to AT&T filing this Agreement with the appropriate Commission for approval. Additionally, and to the extent not already provided by Sprint, Sprint shall provide to AT&T an effective certification to do business issued by the secretary of state or equivalent authority in each state covered by this Agreement.

2.2 To the extent Sprint is not certified as a CLEC in each state covered by this Agreement as of the execution hereof, Sprint may not purchase services hereunder in that state. Sprint will notify AT&T in writing and provide CLEC certification from the Commission when it becomes certified to operate in, as well as an effective certification to do business issued by the secretary of state or equivalent authority for, any other state covered by this Agreement. Upon receipt thereof, AT&T will file this Agreement in that state, and Sprint may purchase services pursuant to this Agreement in that state, subject to establishing appropriate accounts in the additional state as described in Attachment 7.

2.3 Should a Party's certification in any state be rescinded or otherwise terminated (the "non-certified Party"), the other Party may, subject to applicable law, refuse to provide services hereunder in that state until certification is reinstated in that state, or the non-certified Party is otherwise temporarily authorized by the Commission to continue to provide service.

3. Term of the Agreement

3.1 The initial term of this Agreement shall be three (3) years, beginning on the Effective Date and shall apply to the AT&T territory in the states of Alabama, Florida, Georgia, Kentucky, Louisiana, Mississippi, North Carolina, South Carolina and Tennessee. Notwithstanding any prior agreement of the Parties, the rates, terms and conditions of this Agreement shall not be applied retroactively prior to the Effective Date.

3.2 **New Agreement Negotiations**. The Parties agree that if a Party desires to renegotiate any terms or conditions of this Agreement it shall provide written notice to the other Party by no earlier than two hundred seventy (270) days and no later than one hundred eighty (180) days prior to the expiration of the initial term of this Agreement or a Renewal Term and they shall commence good faith negotiations for a new agreement (Subsequent Agreement). If as of the expiration of the initial term of this Agreement or a Renewal Term, a Subsequent Agreement has not been executed by the Parties, then except as set forth in Section 3.3.2

below, this Agreement shall continue on a month-to-month basis while a Subsequent Agreement is being negotiated with no right to terminate without cause.

3.3 **Petitioning Commission.** If, within one hundred and thirty-five (135) days of the notice referred to in Section 3.2 above, the Parties are unable to negotiate new rates, terms and conditions for a Subsequent Agreement, either Party may petition the Commission to establish appropriate rates, terms and conditions for the Subsequent Agreement pursuant to 47 U.S.C. § 252.

3.3.1 **One Time One Year Renewal Term in Lieu of Petitioning Commission**. Except as set forth in Section 3.3.2 and 3.3.3 below, in the event that, as of the date of expiration of the initial term of this Agreement, neither Party has requested negotiations pursuant to Section 3.2, the Parties have not entered into a Subsequent Agreement and no arbitration proceeding has been filed in accordance with Section 3.3, then the Agreement will automatically extend for a new 1 year term (Renewal Term). Except as expressly set forth elsewhere in this Agreement, either Party may request termination of this Agreement only if neither Party is providing any services to the other Party pursuant to this Agreement.

3.3.2 **Month-to-Month Renewal in Lieu of Petitioning Commission**. In the event a Party requests renegotiation pursuant to Section 3.2 and AT&T believes Sprint is failing to engage in good faith negotiations as required by 47 C.F.R. § 51.301, AT&T will send a written notice to Sprint stating AT&T's basis for its belief, and such notice shall include an express reference to this Section 3.3.2. If Sprint continues to fail to engage in good faith negotiations such that the disputed terms and conditions cannot be identified by either Party for inclusion in a good faith petition to the Commission under Section 3.3, and neither Party has filed a petition under Section 3.3., then this Agreement will continue on a month-to-month term that either Party may terminate upon sixty (60) days notice to the other. In the event that either Party terminates this Agreement as provided in this Section 3.3.2, AT&T shall continue to offer services to Sprint pursuant to the rates, terms and conditions set forth in AT&T's then current standard interconnection agreement until replaced by either a Subsequent Agreement negotiated or arbitrated between the Parties, or another AT&T agreement that Sprint elects to opt into pursuant to 47 U.SC. § 252(i).

3.3.3 **Termination At Expiration When No Services Are Being Provided.** In the event that the initial term of this Agreement expires and neither Party is providing any services as of the date of such expiration, then this Agreement shall not continue in any form but shall be deemed terminated as of the expiration date hereof.

3.4 If, at any time during the term of this Agreement, AT&T is unable to contact Sprint pursuant to the Notices provision hereof or any other contact information

provided by Sprint under this Agreement after making commercially reasonable efforts, and there are no active services being provisioned and no traffic is being exchanged under this Agreement, then AT&T may, at its discretion, terminate this Agreement, without any liability whatsoever, upon sending of notification to Sprint pursuant to the Notices section hereof.

3.5 **Suspension, Refusal to Process, Termination.**

3.5.1 **Criminal Use of Facilities or Services**. In the event a Party uses or abuses services or facilities provided under this Agreement in a manner that violates criminal statutes ("Illegal Use') the Party providing service ("the Providing Party") reserves the right with respect to such facilities or services, upon written notice, to suspend access to ordering systems, refuse to process additional or pending applications for service, or terminate service; and all monies owed on all outstanding invoices associated with such services or facilities shall become due, subject to any billing disputes pending at such time. If the non-providing Party disputes it has engaged in such Illegal Use, either Party may, without delay and without participating in the dispute resolution process, immediately pursue any available legal, equitable or regulatory remedy to resolve any question regarding the Providing Party's right with respect to the affected facilities or services, to continue to suspend ordering, refuse to process applications or otherwise terminate services. In the event it is determined that the Providing Party was wrong in its determination that the actions of the non-Providing Party constituted an Illegal Use, notwithstanding anything to the contrary in this Agreement, the Providing Party shall be responsible to the non-Providing Party for any and all civil damages in whatever form provable to the fullest extent of the law, including punitive damages, reasonable attorneys fees and expenses. Notwithstanding the foregoing, the Providing Party will not be liable to the non-Providing Party if it relied on law enforcement or other government agency information in determining that the non-providing Party has engaged in such Illegal Use.

3.5.2 **Unauthorized Use of Facilities or Services**. In the event a Party uses services or facilities provided under this Agreement in a manner that is not Illegal Use under Section 3.5.1 above, but the Providing Party still considers to be prohibited use or abuse of the Providing Party's facilities or service or any other material breach of this Agreement, ("Unauthorized Use"), the Providing Party may with respect to such facilities or service, upon fifteen (15) days written notice to the other Party, suspend access to ordering systems, refuse to process additional or pending applications for service, or terminate service if the other Party fails to take corrective action by the fifteenth (15th) day following the date of the notice, and all monies owed on all outstanding invoices shall become due subject to any billing disputes pending at such time. If the non-providing Party disputes that it has engaged in such Unauthorized Use the Parties will resolve the disagreement pursuant to the dispute resolution process set forth in Section 10, or either Party may, without delay and without participating in the dispute resolution process, immediately pursue any equitable remedy to resolve any question regarding the

Providing Party's right to suspend ordering, refuse to process applications or otherwise terminate services.

3.5.3 With respect to either alleged Illegal Use or Unauthorized Use, in the event a Providing Party's suspension of ordering, refusal to process applications or termination of services is not disputed, or is disputed and sustained, the non-Providing Party is solely responsible for notifying its customers of any discontinuance of service.

4. Nondiscriminatory Access

When Sprint purchases Telecommunications Services from AT&T pursuant to Attachment 1 of this Agreement for the purposes of resale to customers, AT&T shall provide such services so that the services shall be equal in quality, subject to the same conditions, and provided within the same provisioning time intervals that AT&T provides to others, including its customers. To the extent technically feasible, the quality of a Network Element, as well as the quality of the access to such Network Element provided by AT&T to Sprint shall be at least equal in quality to that which AT&T provides to itself and shall be the same for all Telecommunications carriers requesting access to that Network Element. The quality of the interconnection between the network of AT&T and the network of Sprint shall be at a level that is equal to that AT&T provides itself, a subsidiary, an Affiliate, or any other party. The interconnection facilities shall be designed to meet the same technical criteria and service standards that are used within AT&T's network and shall extend to a consideration of service quality as perceived by AT&T's customers and service quality as perceived by Sprint.

5. Court Ordered Requests for Call Detail Records and Other Subscriber Information

5.1 Subpoenas Directed to AT&T. Where AT&T provides resold services for Sprint, AT&T shall respond to subpoenas and court ordered requests delivered directly to AT&T for the purpose of providing call detail records when the targeted telephone numbers belong to Sprint customers. AT&T shall maintain such information for Sprint customers for the same length of time it maintains such information for its own customers. Billing for such requests will be generated by AT&T and directed to the law enforcement agency initiating the request.

5.2 Subpoenas Directed to Sprint. Where AT&T is providing resold services to Sprint, then Sprint agrees that in those cases where Sprint receives subpoenas or court ordered requests for call detail records for targeted telephone numbers belonging to Sprint customers, and where Sprint does not have the requested information, Sprint will advise the law enforcement agency initiating the request to redirect the subpoena or court ordered request to AT&T for handling in accordance with Section 5.1 above.

5.3 In all other instances, where either Party receives a request for information involving the other Party's customer, the Party receiving the request will advise the

law enforcement agency initiating the request to redirect such request to the other Party. In cases where the timing of the response to the law enforcement agency prohibits Sprint from having the subpoena or court ordered request redirected to AT&T by the law enforcement agency, Sprint will furnish the official request to AT&T for providing the call detail information. AT&T will provide the call detail records to Sprint and bill Sprint for the information. Sprint agrees to reimburse AT&T for the call detail information provided.

5.4 Sprint will provide Sprint customer information that is available to Sprint in response to subpoenas and court orders for their own customer records. AT&T will redirect subpoenas and court ordered requests for Sprint customer information to Sprint for the purpose of providing this information to the law enforcement agency.

6 Liability and Indemnification

6.1 Sprint Liability. In the event that Sprint consists of two (2) or more separate entities as set forth in this Agreement and/or any Amendments hereto, or any third party places orders under this Agreement using Sprint's company codes or identifiers, all such entities shall be jointly and severally liable for the obligations of Sprint under this Agreement.

6.2 Liability for Acts or Omissions of Third Parties. AT&T shall not be liable to Sprint for any act or omission of another entity providing any services to Sprint.

6.3 Except for any indemnification obligations of the Parties hereunder, each Party's liability to the other for any loss, cost, claim, injury, liability or expense, including reasonable attorneys' fees relating to or arising out of any cause whatsoever, whether based in contract, negligence or other tort, strict liability or otherwise, relating to the performance of this Agreement, shall not exceed a credit for the actual cost of the services or functions not performed or improperly performed. Any amounts paid to Sprint pursuant to Attachment 9 hereof shall be credited against any reasonably related damages otherwise payable to Sprint pursuant to this Agreement.

6.3.1 Limitations in Tariffs. A Party may, in its sole discretion, provide in its tariffs and contracts with its customers and third parties that relate to any service, product or function provided or contemplated under this Agreement, that to the maximum extent permitted by Applicable Law, such Party shall not be liable to the customer or third party for (i) any loss relating to or arising out of this Agreement, whether in contract, tort or otherwise, that exceeds the amount such Party would have charged that applicable person for the service, product or function that gave rise to such loss and (ii) consequential damages. To the extent that a Party elects not to place in its tariffs or contracts such limitations of liability, and the other Party incurs a loss as a result thereof, such Party shall, except to the extent caused by the other Party's gross negligence or willful misconduct, indemnify and reimburse the other Party for that portion of the loss that would have been limited had the first

Party included in its tariffs and contracts the limitations of liability that such other Party included in its own tariffs at the time of such loss.

6.3.2 Neither AT&T nor Sprint shall be liable for damages to the other Party's terminal location, equipment or customer premises resulting from the furnishing of a service, including, but not limited to, the installation and removal of equipment or associated wiring, except to the extent caused by a Party's negligence or willful misconduct or by a Party's failure to ground properly a local loop after disconnection.

6.3.3 No Consequential Damages. Neither Sprint nor AT&T shall be liable to the other Party for any indirect, incidental, consequential, reliance, or special damages suffered by such other Party (including without limitation damages for harm to business, lost revenues, lost savings, or lost profits suffered by such other parties (collectively, "Consequential Damages")), regardless of the form of action, whether in contract, warranty, strict liability, or tort, including without limitation negligence of any kind whether active or passive, and regardless of whether the Parties knew of the possibility that such damages could result. Each Party hereby releases the other Party and such other Party's subsidiaries and affiliates, and their respective officers, directors, employees and agents from any such claim for consequential damages. Nothing contained in this section shall limit AT&T's or Sprint's liability to the other for actual damages resulting from (i) willful or intentional misconduct (including gross negligence); (ii) bodily injury, death or damage to tangible real or tangible personal property caused by AT&T's or Sprint's negligent act or omission or that of their respective agents, subcontractors or employees, nor shall anything contained in this Section limit the Parties' indemnification obligations as specified herein. In connection with this limitation of liability, each Party recognizes that the other Party may, from time to time, provide advice, make recommendations, or supply other analyses related to the services or facilities described in this Agreement, and, while each Party shall use diligent efforts in this regard, the Parties acknowledge and agree that this limitation of liability shall apply to provision of such advice, recommendations, and analyses.

6.3.4 To the extent any specific provision of this Agreement purports to impose liability, or limitation of liability, on either Party different from or in conflict with the liability or limitation of liability set forth in this Section, then with respect to any facts or circumstances covered by such specific provisions, the liability or limitation of liability contained in such specific provision shall apply.

6.4 Indemnification for Certain Claims. Except to the extent caused by the indemnified Party's gross negligence or willful misconduct, the Party providing services hereunder, its Affiliates and its parent company, shall be indemnified, defended and held harmless by the Party receiving services hereunder against any claim, loss or damage arising from the receiving Party's use of the services provided under this Agreement pertaining to (1) claims for libel, slander or invasion of privacy arising from the content of the receiving Party's own

communications, or (2) any claim, loss or damage claimed by the customer of the Party receiving services arising from such company's use or reliance on the providing Party's services, actions, duties, or obligations arising out of this Agreement.

6.5 Disclaimer. EXCEPT AS SPECIFICALLY PROVIDED TO THE CONTRARY IN THIS AGREEMENT, NEITHER PARTY MAKES ANY REPRESENTATIONS OR WARRANTIES TO THE OTHER PARTY CONCERNING THE SPECIFIC QUALITY OF ANY SERVICES, OR FACILITIES PROVIDED UNDER THIS AGREEMENT. THE PARTIES DISCLAIM, WITHOUT LIMITATION, ANY WARRANTY OR GUARANTEE OF MERCHANTABILITY OR FITNESS FOR A PARTICULAR PURPOSE, ARISING FROM COURSE OF PERFORMANCE, COURSE OF DEALING, OR FROM USAGES OF TRADE.

6.6 Defense; Notice; Cooperation. Whenever the Indemnitee knows or should have known of a claim arising for indemnification under this Section 6, it shall promptly notify the Indemnifying Party of the claim in writing within thirty (30) calendar days and request the Indemnifying Party to defend the same. Failure to so notify the Indemnifying Party shall not relieve the Indemnifying Party of any liability that the Indemnifying Party might have, except to the extent that such failure prejudices the Indemnifying Party's ability to defend such Claim. The Indemnifying Party shall have the right to defend against such liability or assertion in which event the Indemnifying Party shall give written notice to the Indemnitee of acceptance of the defense of such Claim and the identity of counsel selected by the Indemnifying Party. Except as set forth below, such notice to the relevant Indemnitee shall give the Indemnifying Party full authority to defend, adjust, compromise or settle such Claim with respect to which such notice shall have been given, except to the extent that any compromise or settlement shall prejudice the Intellectual Property Rights of the relevant Indemnitees. The Indemnifying Party shall consult with the relevant Indemnitee prior to any compromise or settlement that would affect the Intellectual Property Rights or other rights of any Indemnitee, and the relevant Indemnitee shall have the right to refuse such compromise or settlement and, at the refusing Party's or refusing Parties' cost, to take over such defense, provided that in such event the Indemnifying Party shall not be responsible for, nor shall it be obligated to indemnify the relevant Indemnitee against, any cost or liability in excess of such refused compromise or settlement. With respect to any defense accepted by the Indemnifying Party, the relevant Indemnitee shall be entitled to participate with the Indemnifying Party in such defense if the Claim requests equitable relief or other relief that could affect the rights of the Indemnitee and also shall be entitled to employ separate counsel for such defense at such Indemnitee's expense. In the event the Indemnifying Party does not accept the defense of any indemnified Claim as provided above, the relevant Indemnitee shall have the right to employ counsel for such defense at the expense of the Indemnifying Party. Each Party agrees to cooperate and to cause its employees and agents to cooperate with

the other Party in the defense of any such Claim and the relevant records of each Party shall be available to the other Party with respect to any such defense.

7 Intellectual Property Rights and Indemnification

7.1 No License. Except as expressly set forth in Section 7.2 below, no patent, copyright, trademark or other proprietary right is licensed, granted or otherwise transferred by this Agreement. The Parties are strictly prohibited from any use, including but not limited to, in the selling, marketing, promoting or advertising of Telecommunications Services, of any name, service mark, logo or trademark (collectively, the "Marks") of the other Party. The Marks include those Marks owned directly by a Party or its Affiliate(s) and those Marks that a Party has a legal and valid license to use. The Parties acknowledge that they are separate and distinct and that each provides a separate and distinct service and agree that neither Party may, expressly or impliedly, state, advertise or market that it is or offers the same service as the other Party or engage in any other activity that may result in a likelihood of confusion between its own service and the service of the other Party. Notwithstanding the foregoing, either Party may use the other Party's name in comparative advertising so long as the reference is truthful and factual, is not likely to cause confusion, mistake or deception and does not imply any agency relationship, partnership, endorsement, sponsorship, or affiliation by or with the other Party and provided that the other Party's name appears in standard type, non-logo format.

7.2 Ownership of Intellectual Property. Any intellectual property that originates from or is developed by a Party shall remain the exclusive property of that Party. Except for a limited, non-assignable, non-exclusive, non-transferable license to use patents or copyrights to the extent necessary for the Parties to use any facilities or equipment (including software) or to receive any service solely as provided under this Agreement, no license in patent, copyright, trademark or trade secret, or other proprietary or intellectual property right, now or hereafter owned, controlled or licensable by a Party, is granted to the other Party. Neither shall it be implied nor arise by estoppel. Any trademark, copyright or other proprietary notices appearing in association with the use of any facilities or equipment (including software) shall remain on the documentation, material, product, service, equipment or software. It is the responsibility of each Party to ensure at no additional cost to the other Party that it has obtained any necessary licenses in relation to intellectual property of third Parties used in its network that may be required to enable the other Party to use any facilities or equipment (including software), to receive any service, or to perform its respective obligations under this Agreement.

7.3 Intellectual Property Remedies

7.3.1 Indemnification. The Party providing a service pursuant to this Agreement will defend the Party receiving such service or data provided as a result of such service against claims of infringement arising solely from the use by the receiving Party of such service in the manner contemplated under this Agreement and will indemnify

the receiving Party for any damages awarded based solely on such claims in accordance with Section 6 above.

7.3.2 Claim of Infringement

7.3.2.1 In the event that use of any facilities or equipment (including software), becomes, or in the reasonable judgment of the Party who owns the affected network is likely to become, the subject of a claim, action, suit, or proceeding based on intellectual property infringement, then said Party, promptly and at its sole expense and sole option, but subject to the limitations of liability set forth below, shall:

7.3.2.1.1 modify or replace the applicable facilities or equipment (including software) while maintaining form and function, or

7.3.2.1.2 obtain a license sufficient to allow such use to continue.

7.3.2.2 In the event Sections 7.3.2.1.1 or 7.3.2.1.2 above are commercially unreasonable, then said Party may terminate, upon reasonable notice, this contract with respect to use of, or services provided through use of, the affected facilities or equipment (including software), but solely to the extent required to avoid the infringement claim.

7.3.3 Exception to Obligations. Neither Party's obligations under this Section shall apply to the extent the infringement is caused by: (i) modification of the facilities or equipment (including software) by the indemnitee; (ii) use by the indemnitee of the facilities or equipment (including software) in combination with equipment or facilities (including software) not provided or authorized by the indemnitor, provided the facilities or equipment (including software) would not be infringing if used alone; (iii) conformance to specifications of the indemnitee which would necessarily result in infringement; or (iv) continued use by the indemnitee of the affected facilities or equipment (including software) after being placed on notice to discontinue use as set forth herein.

7.3.4 Exclusive Remedy. The foregoing shall constitute the Parties' sole and exclusive remedies and obligations with respect to a third party claim of intellectual property infringement arising out of the conduct of business under this Agreement.

7.3.5 Dispute Resolution. Any claim arising under Sections 7.1 and 7.2 above shall be excluded from the dispute resolution procedures set forth in Section 10 below and shall be brought in a court of competent jurisdiction.

8 Treatment of Proprietary and Confidential Information

8.1 Proprietary and Confidential Information. It may be necessary for AT&T and Sprint, each as the “Discloser,” to provide to the other Party, as “Recipient,” certain proprietary and confidential information (including trade secret information) including but not limited to technical, financial, marketing, staffing and business plans and information, strategic information, proposals, request for proposals, specifications, drawings, maps, prices, costs, costing methodologies,

procedures, processes, business systems, software programs, techniques, customer account data, call detail records and like information (collectively the "Information"). All such Information shall be provided to Recipient in written or other tangible or electronic form, clearly marked with a confidential and proprietary notice. Information orally or visually provided to Recipient shall be designated by Discloser as confidential and proprietary at the time of such disclosure and shall be reduced to writing by the Discloser within forty-five (45) days thereafter, and shall be clearly marked with a confidential or proprietary legend. Notwithstanding the foregoing, in the event that information is shared verbally and is not reduced to writing as set forth in the preceding sentence, the Party receiving such information will attempt to treat such information with the same degree of care as such Party would afford its own similar information.

8.2 Use and Protection of Information. Recipient shall use the Information solely for the purpose(s) of negotiations pursuant to 47 U.S.C. § 251 or of performing this Agreement, and Recipient shall protect Information from any use, distribution or disclosure except as permitted hereunder. Recipient will use the same standard of care to protect Information as Recipient uses to protect its own similar confidential and proprietary information, but not less than a reasonable standard of care. Recipient may disclose Information solely to the Authorized Representatives of the Recipient who (a) have a substantive need to know such Information in connection with performance of the Agreement; (b) have been advised of the confidential and proprietary nature of the Information; and (c) have personally acknowledged the need to protect from unauthorized disclosure all confidential and proprietary information, of whatever source, to which they have access in the course of their employment. "Authorized Representatives" are the officers, directors and employees of Recipient and its Affiliates, as well as Recipient's and its Affiliates' consultants, contractors, counsel and agents.

8.3 Ownership, Copying and Return of Information. Information remains at all times the property of Discloser. Recipient may make tangible or electronic copies, notes, summaries or extracts of Information only as necessary for use as authorized herein. All such tangible or electronic copies, notes, summaries or extracts must be marked with the same confidential and proprietary notice as appears on the original. Upon Discloser's request, all or any requested portion of the Information (including, but not limited to, tangible and electronic copies, notes, summaries or extracts of any Information) will be promptly returned to Discloser or destroyed, and Recipient will provide Discloser with written certification stating that such Information has been returned or destroyed.

8.4 Exceptions

8.4.1 Information does not include and Recipient will not have an obligation to protect any portion of the Information which:

8.4.2 (a) is made publicly available by the Discloser or lawfully by a nonparty to this Agreement; (b) is lawfully obtained by Recipient from any source other than Discloser, provided that such source lawfully disclosed and/or independently developed such information; (c) is previously known to Recipient without an

obligation to keep it confidential; or (d) is released from the terms of this Agreement by Discloser upon written notice to Recipient. If Recipient is required to provide Information to any court or government agency pursuant to written court order, subpoena, regulation or process of law, Recipient must first provide Discloser with prompt written notice of such requirement and cooperate with Discloser to appropriately protect against or limit the scope of such disclosure. To the fullest extent permitted by law, Recipient will continue to protect as confidential and proprietary all Information disclosed in response to a written court order, subpoena, regulation or process of law.

8.5 Recipient agrees not to publish or use the Information for any advertising, sales or marketing promotions, press releases, or publicity matters that refer either directly or indirectly to the Information or to the Discloser or any of its affiliated companies.

8.6 The disclosure of Information neither grants nor implies any license to the Recipient under any trademark, patent, copyright, application or other intellectual property right that is now or may hereafter be owned by the Discloser.

8.7 Equitable Relief. Recipient acknowledges and agrees that any breach or threatened breach of this Section is likely to cause Discloser irreparable harm for which money damages may not be an appropriate or sufficient remedy. Recipient therefore agrees that Discloser or its Affiliates, as the case may be, are entitled to seek injunctive or other equitable relief to remedy or prevent any breach or threatened breach of this Agreement. Such remedy is not the exclusive remedy for any breach or threatened breach of this Agreement, but is in addition to all other rights and remedies pursuant to this Agreement.

8.8 Survival of Confidentiality Obligations. The Parties' rights and obligations under this Section 8 shall survive and continue in effect until two (2) years after the expiration or termination date of this Agreement with regard to all Information exchanged during the term of this Agreement but in no event longer than three (3) years from receipt of such information. Thereafter, the Parties' rights and obligations hereunder survive and continue in effect with respect to any Information that is a trade secret under applicable law.

8.9 Except as other wise expressly provided in this Section, nothing herein shall be construed as limiting the rights of either Party with respect to its customer information under any applicable law, including without limitation Section 222 of the Act.

8.10 AT&T shall not use proprietary carrier information pursuant to Section 222 (b) of the Act received from Sprint for purposes of soliciting or winning back Sprint's customers.

8.11 Sprint shall not use proprietary carrier information pursuant to Section 222 (b) of the Act received from AT&T for purposes of soliciting or winning back AT&T's customers.

8.12 Nothing herein shall prohibit Recipient from providing Information to the FCC or a state regulatory agency with jurisdiction over this matter to support a request for arbitration or an allegation of failure to negotiate in good faith.

9. Publicity

Neither Party shall produce, publish, or distribute any press release or other publicity referring to the other Party or its Affiliates, or to this Agreement, without the prior written approval of the other Party. Each Party shall obtain the other Party's prior approval before discussing this Agreement in any press or media interviews. In no event shall either Party intentionally mischaracterize the contents of this Agreement in any public statement or in any representation to a governmental entity or member thereof**.**

10. Resolution of Disputes

10.1 Except as otherwise stated in this Agreement, if any dispute arises as to the interpretation of any provision of this Agreement or as to the proper implementation of this Agreement, the aggrieved Party, if it elects to pursue resolution of such dispute, shall petition the FCC or Commission for a resolution of the dispute. Until the dispute is finally resolved, each Party shall continue to perform its obligations under this Agreement and shall continue to provide all services and payments as prior to the dispute provided, however, that neither Party shall be required to act in any unlawful fashion. If the issue is as to how or whether to perform an obligation, the Parties shall continue to operate under the Agreement as they were at the time the dispute arose. This provision shall not preclude the Parties from seeking other legal remedies. However, each Party reserves any rights it may have to seek judicial review of any ruling made by the Commission concerning this Agreement.

10.2 The foregoing Section 10.1 notwithstanding, except to the extent the Commission is authorized to grant temporary equitable relief with respect to a dispute arising as to the enforcement of terms and conditions of this Agreement, and/or as to the interpretation of any provision of this Agreement, this Section 10 shall not prevent either Party from seeking any temporary equitable relief, including a temporary restraining order, in a court of competent jurisdiction.

11. Taxes

11.1 Definition. For purposes of this Section, the terms "taxes" and "fees" shall include but not be limited to federal, state or local sales, use, excise, gross receipts or other taxes or tax-like fees of whatever nature and however designated (including tariff surcharges and any fees, charges or other payments, contractual or otherwise, for the use of public streets or rights of way, whether designated as franchise fees or otherwise) imposed, or sought to be imposed, on or with respect to the services furnished hereunder or measured by the charges or payments therefore, excluding any taxes levied on income.

11.2 Taxes and Fees Imposed Directly On Either Providing Party or Purchasing Party

11.2.1 Taxes and fees imposed on the providing Party, which are not permitted or required to be passed on by the providing Party to its customer, shall be borne and paid by the providing Party.

11.2.2 Taxes and fees imposed on the purchasing Party, which are not required to be collected and/or remitted by the providing Party, shall be borne and paid by the purchasing Party.

11.3 Taxes and Fees Imposed on Purchasing Party But Collected And Remitted By Providing Party

11.3.1 Taxes and fees imposed on the purchasing Party shall be borne by the purchasing Party, even if the obligation to collect and/or remit such taxes or fees is placed on the providing Party.

11.3.2 To the extent permitted by applicable law, any such taxes and/or fees shall be shown as separate items on applicable billing documents between the Parties. Notwithstanding the foregoing, the purchasing Party shall remain liable for any such taxes and fees regardless of whether they are actually billed by the providing Party at the time that the respective service is billed.

11.3.3 If the purchasing Party determines that in its opinion any such taxes or fees are not lawfully due, the providing Party shall not bill such taxes or fees to the purchasing Party if the purchasing Party provides written certification, reasonably satisfactory to the providing Party, stating that it is exempt or otherwise not subject to the tax or fee, setting forth the basis therefore, and satisfying any other requirements under applicable law. If any authority seeks to collect any such tax or fee that the purchasing Party has determined and certified not to be lawfully due, or any such tax or fee that was not billed by the providing Party, the purchasing Party may contest the same in good faith, at its own expense. In the event that such contest must be pursued in the name of the providing Party, the providing Party shall permit the purchasing Party to pursue the contest in the name of providing Party and the providing Party shall have the opportunity to participate fully in the preparation of such contest. In any such contest, the purchasing Party shall promptly furnish the providing Party with copies of all filings in any proceeding, protest, or legal challenge, all rulings issued in connection therewith, and all correspondence between the purchasing Party and the taxing authority.

11.3.4 In the event that all or any portion of an amount sought to be collected must be paid in order to contest the imposition of any such tax or fee, or to avoid the existence of a lien on the assets of the providing Party during the pendency of such contest, the purchasing Party shall be responsible for such payment and shall be entitled to the benefit of any refund or recovery. The purchasing Party shall have the right to contest, at its own expense, any such tax or fee that it believes is not applicable or was paid by it in error. If requested in writing by the purchasing

Party, the providing Party shall facilitate such contest either by assigning to the purchasing Party its right to claim a refund of such tax or fee, if such an assignment is permitted under applicable law, or, if an assignment is not permitted, by filing and pursuing a claim for refund on behalf of the purchasing Party but at the purchasing Party's expense.

11.3.5 If it is ultimately determined that any additional amount of such a tax or fee is due to the imposing authority, the purchasing Party shall pay such additional amount, including any interest and penalties thereon.

11.3.6 Notwithstanding any provision to the contrary, the purchasing Party shall protect, indemnify and hold harmless (and defend at the purchasing Party's expense) the providing Party from and against any such tax or fee, interest or penalties thereon, or other charges or payable expenses (including reasonable attorney fees) with respect thereto, which are reasonably and necessarily incurred by the providing Party in connection with any claim for or contest of any such tax or fee.

11.3.7 Each Party shall notify the other Party in writing of any assessment, proposed assessment or other claim for any additional amount of such a tax or fee by a taxing authority; provided, however, that the failure of a Party to provide notice shall not relieve the other Party of any obligations hereunder, such notice to be provided, if possible, at least ten (10) days prior to the date by which a response, protest or other appeal must be filed, but in no event later than thirty (30) days after receipt of such assessment, proposed assessment or claim.

11.4 Taxes and Fees Imposed on Providing Party But Passed On To Purchasing Party

11.4.1 Taxes and fees imposed on the providing Party, which are permitted or required to be passed on by the providing Party to its customer, shall be borne by the purchasing Party.

11.4.2 To the extent permitted by applicable law, any such taxes and/or fees shall be shown as separate items on applicable billing documents between the Parties. Notwithstanding the foregoing, the purchasing Party shall remain liable for any such taxes and fees regardless of whether they are actually billed by the providing Party at the time that the respective service is billed.

11.4.3 If the purchasing Party disagrees with the providing Party's determination as to the application of or basis for any such tax or fee, the Parties shall consult with respect to the imposition and billing of such tax or fee and with respect to whether to contest the imposition of such tax or fee. Notwithstanding the foregoing, the providing Party shall retain ultimate responsibility for determining whether and to what extent any such taxes or fees are applicable, and the purchasing Party shall abide by such determination and pay such taxes or fees to the providing Party. The providing Party shall further retain ultimate responsibility for determining whether and how to contest the imposition of such taxes and fees; provided, however, the Parties agree to consult in good faith as to such contest and that any

such contest undertaken at the request of the purchasing Party shall be at the purchasing Party's expense. In the event that such contest must be pursued in the name of the providing Party, the providing Party shall permit the purchasing Party to pursue the contest in the name of the providing Party and the providing Party shall have the opportunity to participate fully in the preparation of such contest.

11.4.4 If, after consultation in accordance with the preceding Section, the purchasing Party does not agree with the providing Party's final determination as to the application or basis of a particular tax or fee, and if the providing Party, after receipt of a written request by the purchasing Party to contest the imposition of such tax or fee with the imposing authority, fails or refuses to pursue such contest or to allow such contest by the purchasing Party, the purchasing Party may utilize the dispute resolution procedures in the General Terms and Conditions of this Agreement. Utilization of the dispute resolution process shall not relieve the purchasing Party from liability for any tax or fee billed by the providing Party pursuant to this subsection during the pendency of such dispute resolution proceeding. In the event that the purchasing Party prevails in such dispute resolution proceeding, it shall be entitled to a refund in accordance with the final decision therein. Notwithstanding the foregoing, if at any time prior to a final decision in such dispute resolution proceeding the providing Party initiates a contest with the imposing authority with respect to any of the issues involved in such dispute resolution proceeding, the dispute resolution proceeding shall be dismissed as to such common issues and the final decision rendered in the contest with the imposing authority shall control as to such issues.

11.4.5 In the event that all or any portion of an amount sought to be collected must be paid in order to contest the imposition of any such tax or fee with the imposing authority, or to avoid the existence of a lien on the assets of the providing Party during the pendency of such contest, the purchasing Party shall be responsible for such payment and shall be entitled to the benefit of any refund or recovery. The purchasing Party shall have the right to contest, at its own expense, any such tax or fee that it believes is not applicable or was paid by it in error. If requested in writing by the purchasing Party, the providing Party shall facilitate such contest either by assigning to the purchasing Party its right to claim a refund of such tax or fee, if such an assignment is permitted under applicable law, or, if an assignment is not permitted, by filing and pursuing a claim for refund on behalf of the purchasing Party but at the purchasing Party's expense.

11.4.6 If it is ultimately determined that any additional amount of such a tax or fee is due to the imposing authority, the purchasing Party shall pay such additional amount, including any interest and penalties thereon.

11.4.7 Notwithstanding any provision to the contrary, the purchasing Party shall protect, indemnify and hold harmless (and defend at the purchasing Party's expense) the providing Party from and against any such tax or fee, interest or penalties thereon, or other reasonable charges or payable expenses (including reasonable attorneys'

fees) with respect thereto, which are incurred by the providing Party in connection with any claim for or contest of any such tax or fee.

11.4.8 Each Party shall notify the other Party in writing of any assessment, proposed assessment or other claim for any additional amount of such a tax or fee by a taxing authority; provided, however, that the failure of a Party to provide notice shall not relieve the other Party of any obligations hereunder, such notice to be provided, if possible, at least ten (10) days prior to the date by which a response, protest or other appeal must be filed, but in no event later than thirty (30) days after receipt of such assessment, proposed assessment or claim.

11.5 Additional Provisions Applicable to All Taxes and Fees

11.5.1 In any contest of a tax or fee by one Party, the other Party shall cooperate fully by providing records, testimony and such additional information or assistance as may reasonably be necessary to pursue the contest. Further, the other Party shall be reimbursed for any reasonable and necessary out-of-pocket copying and travel expenses incurred in assisting in such contest. Each Party agrees to indemnify and hold harmless the other Party from and against any losses, damages, claims, demands, suits, liabilities and expenses, including reasonable attorney's fees that arise out of its failure to perform its obligations under this Section.

11.5.2 Notwithstanding any provision of this Agreement to the contrary, any administrative, judicial, or other proceeding concerning the application or amount of a tax or fee shall be maintained in accordance with the provisions of this Section and any applicable federal, state or local law governing the resolution of such disputed tax or fee, and, except as otherwise provided in Section 11.4.4, under no circumstances shall either Party have the right to bring a dispute related to the application or amount of tax or fee before a regulatory authority.

12 Force Majeure

In the event performance of this Agreement, or any obligation hereunder, is either directly or indirectly prevented, restricted, or interfered with by reason of fire, flood, earthquake or like acts of God, wars, revolution, civil commotion/riots, insurrections, explosion, acts of public enemy/terrorists acts, nuclear accidents, power blackouts, embargo, acts of the government in its sovereign capacity, labor difficulties, including without limitation, strikes, slowdowns, picketing, or boycotts, unavailability of equipment from vendor, or any other circumstances beyond the reasonable control and without the fault or negligence of the Party affected, the Party affected shall be excused from such performance on a day-to-day basis to the extent of such prevention, restriction, or interference (and the other Party shall likewise be excused from performance of its obligations on a day-to-day basis until the delay, restriction or interference has ceased); provided, however, that the Party so affected shall use diligent efforts to avoid or remove such causes of non-performance and both Parties shall proceed whenever such causes are removed or cease. The Party affected shall provide notice of the Force Majeure event within a reasonable period of time following such an event.

13 Modification of Agreement

13.1 If Sprint changes its name or makes changes to its company structure or identity due to a merger, acquisition, transfer or any other reason, it is the responsibility of Sprint to notify AT&T of said change, request that an amendment to this Agreement, if necessary, be executed to reflect said change and notify the Commission of such modification of company structure in accordance with the state rules governing such modification in company structure if applicable. Additionally, Sprint shall provide AT&T with any reasonably necessary supporting documentation, which may include, but is not limited to, a credit application, Application for Master Account, proof of authority to provide telecommunications services, the appropriate Operating Company Number (OCN) for each state as assigned by National Exchange Carrier Association (NECA), Carrier Identification Code (CIC), Access Customer Name and Abbreviation (ACNA), AT&T's blanket form letter of authority (LOA), Misdirected Number form and a tax exemption certificate.

13.2 No modification, amendment, supplement to, or waiver of the Agreement or any of its provisions shall be effective and binding upon the Parties unless it is made in writing and duly signed by the Parties.

13.3 In the event that any effective legislative, regulatory, judicial or other legal action materially affects any material terms of this Agreement, or the ability of Sprint or AT&T to perform any material terms of this Agreement, Sprint or AT&T may, on thirty (30) days' written notice, require that such terms be renegotiated, and the Parties shall renegotiate in good faith such mutually acceptable new terms as may be required. In the event that such new terms are not renegotiated within forty-five (45) days after such notice, and either Party elects to pursue resolution of such amendment such Party shall pursue the dispute resolution process set forth in Section 10 above.

13.4 Nothing in this Agreement shall preclude Sprint from purchasing any services or facilities under any applicable and effective AT&T tariff. In the event of a conflict between a provision of this Agreement and a provision of an applicable tariff, the Parties agree to negotiate in good faith to attempt to reconcile and resolve such conflict.

14 Reservation of Legal Rights

Execution of this Agreement by either Party does not confirm or imply that the executing Party agrees with any decision(s) issued pursuant to the Telecommunications Act of 1996 and the consequences of those decisions on specific language in this Agreement. Neither Party waives its rights to appeal or otherwise challenge any such decision(s) and each Party reserves all of its rights to pursue any and all legal and/or equitable remedies, including appeals of any such decision(s).

15 Indivisibility

Subject to Section 16 below, the Parties intend that this Agreement be indivisible and nonseverable, and each of the Parties acknowledges that it has assented to all of the covenants and promises in this Agreement as a single whole and that all of such covenants and promises, taken as a whole, constitute the essence of the contract and no Attachment hereto constitutes a stand-alone provision. The Parties further acknowledge that this Agreement is intended to constitute a single transaction and that the obligations of the Parties under this Agreement are interdependent.

16 Severability

If any provision of this Agreement, or the application of such provision to either Party or circumstance, shall be held invalid or unenforceable in any respect, the remainder of the Agreement or provision or the application of any such provision to the Parties or circumstances other than those to which it is held invalid, shall not be affected thereby, provided that the Parties shall negotiate in good faith to reformulate such invalid provision, or part thereof, or related provision, to reflect as closely as possible the original intent of the Parties, consistent with applicable law, and to effectuate such portions thereof as may be valid without defeating the intent of such provision. In the event the Parties are unable to mutually negotiate such replacement language, either Party may elect to pursue the dispute resolution process set forth in Section 10 above.

17 Non-Waivers

A failure or delay of either Party to enforce any of the provisions hereof, to exercise any option which is herein provided, or to require performance of any of the provisions hereof shall in no way be construed to be a waiver of such provisions or options, and each Party, notwithstanding such failure, shall have the right thereafter to insist upon the performance of any and all of the provisions of this Agreement.

18 Governing Law

Where applicable, this Agreement shall be governed by and construed in accordance with federal and state substantive telecommunications law, including rules and regulations of the FCC and appropriate Commission. In all other respects, this Agreement shall be governed by and construed and enforced in accordance with the laws of the state in which the services are being ordered without regard to its conflict of laws principles.

19 Assignments and Transfers

19.1 Any assignment by either Party to any entity of any right, obligation or duty, or of any other interest hereunder, in whole or in part, without the prior written consent of the other Party shall be void. The assignee must provide evidence of a Commission approved certification to provide Telecommunications Service in each state in which the proposed assignment is to occur to the extent such certification is required in such state. In the case of a proposed assignment to a Party's Affiliate, the non-assigning Party's consent shall not be unreasonably withheld.

After the non-assigning Party's consent, the Parties shall amend this Agreement to reflect such assignments and shall work cooperatively to implement any changes required due to such assignment. All obligations and duties of any Party under this Agreement shall be binding on all successors in interest and assigns of such Party. No assignment or delegation hereof shall relieve the assignor of its obligations under this Agreement in the event that the assignee fails to perform such obligations. Notwithstanding anything to the contrary in this Section, a Party shall not be permitted to assign this Agreement in whole or in part to any entity unless either (1) The assigning Party pays all undisputed bills, past due and current, under this Agreement and assumes responsibility for the payment of any amounts resulting from the resolution of a billing dispute, or (2) The assigning Party's assignee expressly assumes liability for payment of such bills.

19.2 In the event that Sprint desires to transfer any services hereunder to another provider of Telecommunications Service, or Sprint desires to assume hereunder any services provisioned by AT&T to another provider of Telecommunications Service, such transfer of services shall be subject to separately negotiated rates, terms and conditions.

20 Notices

20.1 Every notice, consent approval, or other communications, required, permitted, or contemplated by this Agreement shall be in writing and shall be delivered either by hand, by overnight courier or by US mail postage prepaid, addressed to:

AT&T Telecommunications, Inc.

AT&T Local Contract Manager
600 North 19th Street, 10th floor
Birmingham, AL 35203

and

ICS Attorney
Suite 4300
675 West Peachtree Street
Atlanta, GA 30375

Sprint Communications Company, L.P.
Sprint Spectrum L.P.

For Sprint CLEC or Sprint PCS, as applicable:

Sprint Communications Company L.P.
Director – Access Solutions
6330 Sprint Parkway
Mailstop: KSOPHA0110-1B271

Overland Park, KS 66251

Sprint Spectrum L.P.
Director – Access Solutions
6330 Sprint Parkway
Mailstop: KSOPHA0110-1B271
Overland Park, KS 66251

And to:

Sprint Legal Department
Senior Counsel
6450 Sprint Parkway
Mailstop: KSOPHN0214-2A568
Overland Park, KS 66251

or at such other address as the intended recipient previously shall have designated by written notice to the other Party.

20.2 Unless otherwise provided in this Agreement, notice by mail shall be effective on the date it is officially recorded as delivered by return receipt or equivalent, and in the absence of such record of delivery, it shall be presumed to have been delivered the fifth day, or next business day after the fifth day, after it was deposited in the mails.

20.3 Notwithstanding the foregoing, AT&T may post to AT&T's Interconnection Web site changes to business processes and policies and shall post to AT&T's Interconnection Web site or submit through applicable electronic systems, other service and business related notices not requiring an amendment to this Agreement.

20.4 AT&T shall provide notice of network changes and upgrades as required by Section 51.325 through 51.335 of Title 47 of the Code of Federal Regulations or other applicable FCC and/or Commission rules.

21 Rule of Construction

No rule of construction requiring interpretation against the drafting Party hereof shall apply in the interpretation of this Agreement.

22 Headings of No Force or Effect

The headings of Articles and Sections of this Agreement are for convenience of reference only, and shall in no way define, modify or restrict the meaning or interpretation of the terms or provisions of this Agreement.

23 Multiple Counterparts

This Agreement may be executed in multiple counterparts, each of which shall be deemed an original, but all of which shall together constitute but one and the same document.

24 Filing of Agreement

This Agreement, and any amendments hereto, shall be filed with the appropriate state regulatory agency pursuant to the requirements of Section 252 of the Act, or as otherwise required by the state and the Parties shall share equally in any applicable fees.

25 Compliance with Law

The Parties have negotiated their respective rights and obligations pursuant to substantive Federal and State Telecommunications law and this Agreement is intended to memorialize the Parties' mutual agreement and compromise with respect to each Party's rights and obligations under the Act and applicable FCC and Commission orders, rules and regulations. Nothing contained herein, nor any reference to applicable rules and orders, is intended to expand on the Parties' rights and obligations as set forth herein. To the extent the provisions of this Agreement differ from the provisions of any Federal or State Telecommunications statute, rule or order in effect as of the execution of this Agreement, this Agreement shall control. Each Party shall comply at its own expense with all other laws of general applicability.

26 Necessary Approvals

Each Party shall be responsible for obtaining and keeping in effect all approvals from, and rights granted by, governmental authorities, building and property owners, other carriers, and any other persons that may be required in connection with the performance of its obligations under this Agreement. Each Party shall reasonably cooperate with the other Party in obtaining and maintaining any required approvals and rights for which such Party is responsible.

27 Good Faith Performance

Each Party shall act in good faith in its performance under this Agreement and, in each case in which a Party's consent or agreement is required or requested hereunder, such Party shall not unreasonably withhold or delay such consent or agreement.

28 Rates

28.1 Each Party shall pay the applicable charges set forth in this Agreement. In the event that a Party is unable to bill the applicable rate or no rate is established or included in this Agreement for any services provided pursuant to this Agreement, provided, however, that subject to the limitation regarding billing disputes as described in Section 2.2 of Attachment 7 hereof, a Party shall not back bill any amounts for services rendered more than twelve (12) months prior to the date that the charges or additional charges for such services are actually billed. Notwithstanding the foregoing, both Parties recognize that the following situations could necessitate back billing beyond twelve (12) months.

- Charges incorrectly billed due to erroneous information supplied by the non-billing Party;

- Charges for which a regulatory body has granted the billing Party the authority to back bill beyond twelve (12) months.

28.2 To the extent a rate element is unintentionally omitted, the Parties will amend the Agreement to include such rate and such rate shall apply to any services provisioned prior to the date of the amendment and shall apply as of the date such services were provisioned.

28.3 To the extent Sprint requests services not included in this Agreement, such services shall be provisioned pursuant to the rates, terms and conditions set forth in the applicable tariffs or a separately negotiated Agreement, unless the Parties agree to amend this Agreement to include such service prospectively.

29. Rate True-Up

29.1 This section applies to rates that are identified as "interim" rates on the Rate Sheets, and it is understood that such rates are subject to true-up**.**

29.2 The rates shall be trued-up, either up or down, based on final prices determined either by further agreement between the Parties, or by a final and effective order of the Commission. The Parties shall implement the true-up by comparing the actual volumes and demand for each item, together with the rates for each item, with the final prices determined for each item. Any final payment from one Party to the other shall be in an amount agreed upon by the Parties, subject to the dispute resolution process set forth in this Agreement.

30. Survival

The Parties' obligations under this Agreement which by their nature are intended to continue beyond the termination or expiration of this Agreement shall survive the termination or expiration of this Agreement.

31 Entire Agreement

31.1 This Agreement means the General Terms and Conditions, the Attachments hereto and all documents identified therein, as such may be amended from time to time and which are incorporated herein by reference, all of which, when taken together, are intended to constitute one indivisible agreement. This Agreement sets forth the entire understanding and supersedes prior agreements between the Parties relating to the subject matter contained in this Agreement and merges all prior discussions between them. Any pending orders placed under prior agreements between the Parties and outstanding as of the Effective Date shall be provisioned pursuant to this Agreement. Sprint acknowledges and agrees that any and all amounts and obligations owed for services provisioned or orders placed under prior agreements between the Parties related to the subject matter hereof, shall, as of the Effective Date, be due and owing under this Agreement and be governed by the terms and conditions of this Agreement as if such services or orders were provisioned or placed under this Agreement. Any disputes regarding services ordered and provided under a prior agreement pending as of the Effective Date

hereof will be resolved under such prior agreement. Neither Party shall be bound by any definition, condition, provision, representation, warranty, covenant or promise other than as expressly stated in this Agreement or as is contemporaneously or subsequently set forth in writing and executed by a duly authorized officer or representative of the Party to be bound thereby.

31.2 Any reference throughout this Agreement to a tariff, industry guideline, AT&T's technical guideline or reference, AT&T business rule, guide or other such document containing processes or specifications applicable to the services provided pursuant to this Agreement, shall be construed to refer to only those provisions thereof that are applicable to these services, and shall include any successor or replacement versions thereof, all as they are amended from time to time and all of which are incorporated herein by reference, and may be found at AT&T's Interconnection Web site at: www.interconnection.bellsouth.com. References to state tariffs throughout this Agreement shall be to the tariff for the state in which the services were provisioned; provided, however, that in any state where certain AT&T services or tariff provisions have been or become deregulated or detariffed, any reference in this Agreement to a detariffed or deregulated service or provision of such tariff shall be deemed to refer to the service description, price list or other agreement pursuant to which AT&T provides such services as a result of detariffing or deregulation.

Sprint Affiliates and Network Managers

AirGate PCS, Inc. f/k/a AirGate Wireless, LLC (AirGate)

Enterprise Digital PCS, L.L.C., Enterprise Wireless, L.L.C. (Enterprise)

Georgia PCS Management, LLC, US Unwired, LLC (Georgia PCS)

Gulf Coast Wireless Limited Partnership f/k/a Meretel Communications, L.P. (Gulf Coast)

Horizon Personal Communications, Inc. (Horizon)

Louisiana Unwired, L.L.C. (Louisiana Unwired)

Ubiquitel Operating Company/Ubiquitel, LLC (Ubiquitel)

IN WITNESS WHEREOF, the Parties have executed this Agreement the day and year written below.

BellSouth Telecommunications, Inc.
d/b/a
AT&T Alabama
AT&T Florida
AT&T Georgia
AT&T Kentucky
AT&T Louisiana
AT&T Mississippi
AT&T North Carolina
AT&T South Carolina
AT&T Tennessee

By: _____

Name: Kristen E. Shore

Title: Director

Date: _____

Sprint Communications Company L.P.

By: _____

Name: _____

Title: _____

Date: _____

Sprint Spectrum L.P.

By: _____

Name: _____

Title: _____

Date: _____

Attachment 1

Resale

Table of Contents

1. Discount Rates 3

2. Definition of Terms 3

3. General Provisions 3

4 AT&T's Provision of Services to Sprint 6

5. Maintenance of Services 7

6. Discontinuance of Service 7

7. Operator Services (Operator Call Processing and Directory Assistance) 8

8. Branding for Wholesale OCP and DA 99

9. LIDB 100

10. Revenue Accounting Office (RAO) Hosting 10

11. Optional Daily Usage File (ODUF) 10

12. Enhanced Optional Daily Usage File (EODUF) 10

Resale Restrictions ..... Exhibit A

Optional Daily Usage File (ODUF) ..... Exhibit B

Enhanced Option Daily Usage File (EODUF) ..... Exhibit C

Resale Discounts and Rates ..... Exhibit D

RESALE

1. Discount Rates

1.1 The discounts rates applied to Sprint's purchases of AT&T Telecommunications Services for the purpose of resale shall be as set forth in Exhibit D. Such discounts have been determined by the applicable Commission to reflect the costs avoided by AT&T when selling a service for wholesale purposes.

1.2 The Telecommunications Services available for purchase by Sprint for the purposes of resale to Sprint's customers shall be available at AT&T's tariffed rates less the discount reflected in Exhibit D and subject to the exclusions and limitations in Exhibit A.

2. Definition of Terms

For purposes of this Attachment only, the following terms shall have the definitions as set forth below:

2.1 Customer of Record means the entity responsible for placing application for service; requesting additions, rearrangements, maintenance or discontinuance of service; payment in full of charges incurred such as nonrecurring, monthly recurring, toll, directory assistance, etc.

2.2 End User Customer Location means the physical location of the premises where a customer makes use of the Telecommunications Services.

2.3 New Services means functions, features or capabilities that are not currently offered by AT&T. This includes packaging of existing services or combining a new function, feature or capability with an existing service.

2.4 Resale means an activity wherein a certificated CLEC, such as Sprint, subscribes to the retail Telecommunications Services of AT&T and then offers those retail Telecommunications Services to the public.

3. General Provisions

3.1 All of the negotiated rates, terms and conditions set forth in this Attachment pertain to the resale of AT&T's retail Telecommunications Services and other services specified in this Attachment. Subject to effective and applicable FCC and Commission rules and orders, AT&T shall make available to Sprint for resale those Telecommunications Services AT&T makes available, pursuant to its General Subscriber Services Tariff (GSST) and Private Line Services Tariff, to customers who are not Telecommunications carriers.

3.1.1 When Sprint provides Resale service in a cross boundary area (customer is physically located in a particular state and is served by a central office in an adjoining state) the rates, regulations and discounts for the state in which the serving central office is located will apply. Billing will be from the state in which the customer is located.

3.2 Sprint as a reseller of Lifeline and Link-Up Services hereby certifies that it has

and will comply with the FCC requirements governing the Lifeline and Link-Up programs as set forth in 47 C.F.R. § 54.417(a) and (b). This includes the requirements set forth in AT&T's GSST, Sections A3.31 and A4.7.

3.2.1 Sprint shall maintain records to document FCC or applicable state eligibility and verification records to document compliance governing the Lifeline/Link-Up programs for the three (3) full preceding calendar years, and Sprint shall provide such documentation to the FCC or its Administrator upon request.

3.2.2 In Tennessee, if Sprint does not resell Lifeline service to any end users, and if Sprint agrees to order an appropriate Operator Services/Directory Assistance block as set forth in AT&T's GSST, the discount shall be twenty-one point fifty-six percent (21.56%).

3.2.2.1 In the event Sprint resells Lifeline service to any end user in Tennessee, AT&T will begin applying the sixteen percent (16%) discount rate to all services. Upon Sprint and AT&T's implementation of a billing arrangement whereby a separate Master Account (Q-account) associated with a separate OCN is established for billing of Lifeline service end users, the discount shall be applied as set forth in Section 3.2.2 above for the non-Lifeline affected Q-account.

3.2.2.2 Sprint must provide written notification to AT&T within thirty (30) days prior to either providing its own operator services/directory services or ordering the appropriate operator services/directory assistance blocking, to qualify for the higher discount rate of twenty-one point fifty-six percent (21.56%).

3.3 Sprint may purchase resale services from AT&T for its own use in operating its business. The resale discount will apply to those services under the following conditions:

3.3.1 Sprint must resell services to other end users.

3.3.2 Sprint cannot be a CLEC for the single purpose of selling to itself.

3.3.3 Sprint will be the Customer of Record for all services purchased from AT&T. Except as specified herein, AT&T will take orders from, bill and receive payment from Sprint for said services.

3.4 Sprint will be AT&T's single point of contact for all services purchased pursuant to this Agreement. AT&T shall have no contact with the customer except to the extent provided for herein.

3.5 AT&T will continue to bill the customer for any services that the customer specifies it wishes to receive directly from AT&T. AT&T maintains the right to serve directly any customer within the service area of Sprint. AT&T will continue to market directly its own Telecommunications products and services and in doing so may establish independent relationships with customers of Sprint. Neither Party shall interfere with the right of any person or entity to obtain service directly from the other Party.

3.5.1 AT&T will accept a request from another CLEC for conversion of the customer's service from Sprint to such other CLEC. Upon completion of the conversion AT&T will notify Sprint that such conversion has been completed.

3.5.2 When a customer of Sprint or AT&T elects to change his/her carrier to the other Party, both Parties agree to release the customer's service to the other Party concurrent with the due date of the service order, which shall be established based on the standard interval for the customer's requested service as set forth in the AT&T Product and Services Interval Guide.

3.5.3 AT&T and Sprint will refrain from contacting a customer who has placed or whose selected carrier has placed on the customer's behalf an order to change the customer's service provider from AT&T or Sprint to the other Party until such time that the order for service has been completed.

3.6 Current telephone numbers may normally be retained by the customer and are assigned to the service furnished. However, neither Party nor the customer has a property right to the telephone number or any other call number designation associated with services furnished by AT&T, and no right to the continuance of service through any particular central office. AT&T reserves the right to change such numbers, or the central office designation associated with such numbers, or both, whenever AT&T deems it necessary to do so in the conduct of its business and in accordance with AT&T practices and procedures on a nondiscriminatory basis.

3.7 Service is furnished subject to the condition that it will not be used for any unlawful purpose.

3.8 Service will be discontinued if any law enforcement agency advises that the service being used is in violation of the law.

3.9 AT&T can refuse service when it has reasonable grounds to believe that service will be used in violation of the law. Reasonable grounds shall be based on the same criteria AT&T uses to refuse services to it own customers.

3.10 If Sprint or its customers utilize a AT&T resold Telecommunications Service in a manner other than that for which the service was originally intended as described in AT&T's retail tariffs Sprint has the responsibility to notify AT&T. AT&T will only provision and maintain said service consistent with the terms and conditions of the tariff describing said service.

3.11 Facilities and/or equipment utilized by AT&T to provide service to Sprint remain the property of AT&T.

3.12 <u>Service Ordering and Operations Support Systems (OSS)</u>

3.12.1 Sprint must order services through resale interfaces, i.e., the Local Carrier Service Center (LCSC) and/or appropriate Complex Resale Support Group (CRSG) pursuant to this Agreement. Sprint may submit a Local Service Request (LSR) electronically as set forth in Attachment 6. Service orders will be in a standard format designated by AT&T.

3.12.2 AT&T messaging services set forth in AT&T's Messaging Service Re-Seller Information Package shall be made available for resale without the wholesale discount.

3.13 AT&T's Inside Wire Maintenance Service Plan is available for resale at rates,

terms and conditions as set forth by AT&T and without the wholesale discount.

3.14 In the event Sprint acquires a customer whose service is provided pursuant to a AT&T Special Assembly, AT&T shall make available to Sprint that Special Assembly at the wholesale discount at Sprint's option. Sprint shall be responsible for all terms and conditions of such Special Assembly including but not limited to termination liability if applicable.

3.15 AT&T shall provide 911/E911 for Sprint customers in the same manner that it is provided to AT&T customers. AT&T shall provide and validate Sprint customer information to the Public Safety Answering Point (PSAP). AT&T shall use its service order process to update and maintain, on the same schedule that it uses for its customers, the Sprint customer information in the Automatic Location Identification/Data Management System (ALI/DMS) databases used to support 911/E911 services.

3.16 Pursuant to 47 C.F.R. § 51.617, AT&T shall bill to Sprint, and Sprint shall pay, the End User Common Line (EUCL) charges identical to the EUCL charges AT&T bills its customers.

4 AT&T's Provision of Services to Sprint

4.1 Resale of AT&T services shall be as follows:

4.1.1 The resale of Telecommunications Services shall be limited to users and uses conforming to the class of service restrictions.

4.1.2 Hotel and Hospital PBX services are the only Telecommunications Services available for resale to Hotel/Motel and Hospital customers, respectively. Similarly, Access Line Service for Customer Provided Coin Telephones is the only local service available for resale to Payphone Service Provider (PSP) customers. Shared Tenant Service customers can only be sold those local exchange access services available in AT&T's GSST Section A23, Shared Tenant Service Section in the states of Florida, Georgia, North Carolina and South Carolina, and in A27 in the states of Alabama, Kentucky, Louisiana, Mississippi and Tennessee.

4.1.3 AT&T reserves the right to periodically audit services purchased by Sprint to establish authenticity of use. Such audit shall not occur more than once in a calendar year. Sprint shall make any and all records and data available to AT&T or AT&T's auditors on a reasonable basis. AT&T shall bear the cost of said audit. Any information provided by Sprint for purposes of such audit shall be deemed Confidential Information pursuant to the General Terms and Conditions.

4.2 Subject to Exhibit A hereto, resold services can only be used in the same manner as specified in AT&T's Tariffs. Resold services are subject to the same terms and conditions as are specified for such services when furnished to an individual customer of AT&T in the appropriate section of AT&T's Tariffs. Specific tariff features (e.g., a usage allowance per month) shall not be aggregated across multiple resold services.

4.3 If Sprint cancels an order for resold services, any costs incurred by AT&T in

conjunction with provisioning of such order will be recovered in accordance with AT&T's GSST and Private Line Services Tariffs.

4.4 Service Jointly Provisioned with an Independent Company or CLEC

4.4.1 AT&T will in some instances provision resold services in accordance with AT&T's GSST and Private Line Tariffs jointly with an Independent Company (ICO) or other CLEC.

4.4.2 When Sprint assumes responsibility for such service, all terms and conditions defined in the Tariff will apply for services provided within the AT&T service area only.

4.4.3 Service terminating in an ICO or other CLEC area will be provisioned and billed by the ICO or other CLEC directly to Sprint.

4.4.4 Sprint must establish a billing arrangement with the ICO or other CLEC prior to assuming a customer account where such circumstances apply.

4.4.5 Specific guidelines regarding such services are available on the AT&T Interconnection Web site.

5. Maintenance of Services

5.1 Services resold pursuant to this Attachment and AT&T's GSST and Private Line Service Tariff and facilities and equipment provided by AT&T shall be maintained by AT&T.

5.2 Sprint or its customers may not rearrange, move, disconnect, remove or attempt to repair any facilities owned by AT&T except with the written consent of AT&T.

5.3 Sprint accepts responsibility to notify AT&T of situations that arise that may result in a service problem.

5.4 Sprint will contact the appropriate repair centers in accordance with procedures established by AT&T.

5.5 For all repair requests, Sprint shall adhere to AT&T's prescreening guidelines prior to referring the trouble to AT&T.

5.6 AT&T reserves the right to contact Sprint's customers, if deemed necessary, for maintenance purposes.

6. Discontinuance of Service

6.1 The procedures for discontinuing service to a customer are as follows:

6.1.1 AT&T will deny service to Sprint's customer on behalf of, and at the request of, Sprint. Upon restoration of the customer's service, restoral charges will apply and will be the responsibility of Sprint.

6.1.2 At the request of Sprint, AT&T will disconnect a Sprint customer.

6.1.3 All requests by Sprint for denial or disconnection of a customer for nonpayment must be in writing.

6.1.4 Sprint will be made solely responsible for notifying the customer of the proposed

disconnection of the service.

6.1.5 AT&T will continue to process calls made to the Annoyance Call Center and will advise Sprint when it is determined that annoyance calls are originated from one of its customer's locations. AT&T shall be indemnified, defended and held harmless by Sprint and/or the customer against any claim, loss or damage arising from providing this information to Sprint. It is the responsibility of Sprint to take the corrective action necessary with its customer who makes annoying calls. (Failure to do so will result in AT&T's disconnecting the customer's service.)

7. Operator Services (Operator Call Processing and Directory Assistance)

7.1 Operator Call Processing (OCP) provides: (1) operator handling for call completion (for example, collect, third number billing, and manual calling-card calls); (2) operator or automated assistance for billing after the customer has dialed the called number (for example, calling card calls); and (3) special services including but not limited to Busy Line Verification and Emergency Line Interrupt (ELI), Emergency Agency Call and operator-assisted Directory Assistance (DA).

7.2 Upon request for AT&T OCP, AT&T shall:

7.2.1 Process 0+ and 0- dialed local calls.

7.2.2 Process 0+ and 0- intraLATA toll calls.

7.2.3 Process calls that are billed to Sprint customer's calling card that can be validated by AT&T.

7.2.4 Process person-to-person calls.

7.2.5 Process collect calls.

7.2.6 Provide the capability for callers to bill a third party and shall also process such calls.

7.2.7 Process station-to-station calls.

7.2.8 Process Busy Line Verify and ELI requests.

7.2.9 Process emergency call trace originated by PSAP.

7.2.10 Process operator-assisted DA calls.

7.2.11 Adhere to equal access requirements, providing Sprint local customer the same IXC access that AT&T provides its own operator service (OS).

7.2.12 Exercise at least the same level of fraud control in providing OS to Sprint that AT&T provides for its own OS.

7.2.13 Perform Billed Number Screening when handling Collect, Person-to-Person, and Billed-To-Third-Party calls.

7.2.14 Direct customer account and other similar inquiries to the customer service center designated by Sprint.

7.3 Upon Sprint's request AT&T shall provide call records to Sprint in accordance with Optional Daily Usage File (ODUF) standards.

7.4 The interface requirements shall conform to the interface specifications for the platform used to provide OS as long as the interface conforms to industry standards.

7.5 DA Service

7.5.1 DA Service provides local and non-local customer telephone number listings with the option to complete the call at the caller's direction separate and distinct from local switching.

7.5.2 DA Service shall provide up to two (2) listing requests per call, if available and if requested by Sprint's customer. AT&T shall provide caller-optional DA call completion service at rates set forth in AT&T's GSST to one of the provided listings.

7.6 DA Service Updates. AT&T shall update customer listings changes daily. These changes include:

7.6.1 New customer connections;
7.6.2 Customer disconnections;
7.6.3 Customer address changes; and
7.6.4 Non-listed and non-published numbers for use in emergencies.

8. Branding for Wholesale OCP and DA

8.1 AT&T's branding feature provides a definable announcement to Sprint's customers using AT&T's DA/OCP prior to placing such customers in queue or connecting them to an available operator or automated operator system. This feature allows Sprint to have its calls custom branded with Sprint's name on whose behalf AT&T is providing DA and/or OCP. Rates for the branding features are set forth in Exhibit D.

8.2 AT&T offers three (3) branding options to Sprint when ordering AT&T's DA and OCP: AT&T Branding, Unbranding and Custom Branding.

8.3 Sprint's order for Custom Branding is considered firm ten (10) business days after AT&T's receipt of the order. Sprint may cancel its order more than ten (10) business days after AT&T's receipt of the order. Sprint shall notify AT&T in writing and shall pay all charges per the order. For branding and unbranding via Originating Line Number Screening (OLNS), Sprint must contact its Local Contract Manager to initiate the order via the OLNS Branding Order form.

8.4 Branding via OLNS

8.4.1 AT&T Branding, Unbranding and Custom Branding are also available for DA, OCP or both via OLNS software. When utilizing this method of Unbranding or Custom Branding, Sprint shall not be required to purchase dedicated trunking.

8.4.2 AT&T Branding is the default branding offering.

8.4.3 For AT&T to provide Unbranding or Custom Branding via OLNS software for OCP or for DA, Sprint must have its OCN(s) and telephone numbers reside in AT&T's Line Information Database (LIDB). To implement Unbranding and

Custom Branding via OLNS software, Sprint must submit a manual order form which requires, among other things, Sprint's OCN and a forecast, pursuant to the appropriate AT&T form provided, for the traffic volume anticipated for each AT&T Traffic Operator Position System (TOPS) during the peak busy hour. Sprint shall provide updates to such forecast on a quarterly basis and at any time such forecasted traffic volumes are expected to change significantly. Upon Sprint's purchase of Unbranding or Custom Branding using OLNS software for any particular TOPS, all Sprint customers served by that TOPS will receive the Unbranded "no announcement" or the Custom Branded announcement.

9. LIDB

9.1 AT&T LIDB stores current information on working telephone numbers and billing account numbers.

9.2 Where Sprint is purchasing Resale services, AT&T shall utilize AT&T's service order generated from Sprint LSRs to populate LIDB with Sprint's customer information. AT&T provides access to information in its LIDB, including Sprint customer information, to its LIDB customers via queries to LIDB.

9.2.1 When necessary for fraud control measures, AT&T may perform additions, updates and deletions of Sprint data to the LIDB (e.g., calling card deactivation).

9.2.2 Sprint will not be charged a fee for LIDB storage services provided by AT&T to Sprint pursuant to this Attachment.

9.3 Responsibilities of the Parties

9.3.1 AT&T will administer the data provided by Sprint pursuant to this Agreement in the same manner as AT&T administers its own data.

9.3.2 Sprint is responsible for completeness and accuracy of the data being provided to AT&T.

9.3.3 AT&T shall not be responsible to Sprint for any lost revenue which may result from AT&T's administration of the LIDB pursuant to its established practices and procedures as they exist and as they may be changed by AT&T in its sole discretion from time to time.

10. Revenue Accounting Office (RAO) Hosting

10.1 RAO Hosting is not required for resale in the AT&T region.

11. Optional Daily Usage File (ODUF)

11.1 The ODUF Agreement with terms and conditions is included in this Attachment as Exhibit B. Rates for ODUF are as set forth in Exhibit D.

11.2 AT&T will provide ODUF service upon written request.

12. Enhanced Optional Daily Usage File (EODUF)

12.1 The EODUF service Agreement with terms and conditions is included in this Attachment as Exhibit C. Rates for EODUF are as set forth in Exhibit D.

12.2 AT&T will provide EODUF service upon written request.

EXCLUSIONS AND LIMITATIONS ON SERVICES AVAILABLE FOR RESALE (Note 4)

	Type of Service	AL		FL		GA		KY		LA		MS		NC		SC		TN	
		Resale	Discount	Resale	Discount	Resale	Discount	Resale	Discount	Resale	Discount	Resale	Discount	Resale	Discount	Resale	Discount	Resale	Discount
1	Grandfathered Services (Note 1)	Yes	Yes	Yes	Yes	Yes	Yes	Yes	Yes	Yes	Yes	Yes	Yes	Yes	Yes	Yes	Yes	Yes	Yes
2	Promotions - > 90 Days (Note 2 &3)	Yes	Yes	Yes	Yes	Yes	Yes	Yes	Yes	Yes	Yes	Yes	Yes	Yes	Yes	Yes	Yes	Yes	Yes
3	Promotions - < 90 Days (Note 2 & 3)	Yes	No	~~Yes~~No	No	Yes	No	Yes	No	Yes	No	Yes	No	Yes	No	~~Yes~~No	No	~~Yes~~No	No
4	Lifeline/Link Up Services	Yes	Yes	Yes	Yes	Yes	Yes	Yes	Yes	Yes	Yes	Yes	Yes	Yes	Yes	Yes	Yes	Yes	Yes
5	911/E911 Services	Yes	Yes	Yes	Yes	Yes	Yes	Yes	Yes	No	No	Yes	Yes	Yes	Yes	Yes	Yes	Yes	Yes
6	N11 Services (Note 1)	Yes	Yes	Yes	Yes	Yes	Yes	No	No	No	No	Yes	Yes	Yes	Yes	No	No	Yes	Yes
7	MemoryCall® Service	Yes	No	Yes	No	Yes	No	Yes	No	Yes	No	Yes	No	Yes	No	Yes	No	Yes	No
8	Mobile Services	Yes	No	Yes	No	Yes	No	Yes	No	Yes	No	Yes	No	Yes	No	Yes	No	Yes	No
9	Federal Subscriber Line Charges	Yes	No	Yes	No	Yes	No	Yes	No	Yes	No	Yes	No	Yes	No	Yes	No	Yes	No
10	Nonrecurring Charges	Yes	Yes	Yes	Yes	Yes	Yes	Yes	Yes	Yes	Yes	Yes	Yes	Yes	Yes	Yes	Yes	Yes	No
11	EUCL Charge	Yes	No	Yes	No	Yes	No	Yes	No	Yes	No	Yes	No	Yes	No	Yes	No	Yes	No
12	Public Telephone Access Svc(PTAS)	Yes	Yes	Yes	Yes	Yes	Yes	Yes	Yes	Yes	Yes	Yes	Yes	Yes	Yes	Yes	No	Yes	Yes
13	Inside Wire Maint Service Plan	Yes	No	Yes	No	Yes	No	Yes	No	Yes	No	Yes	No	Yes	No	Yes	No	Yes	No

	Applicable Notes:
1.	**Grandfathered services** can be resold only to existing subscribers of the grandfathered service.
2.	Where available for resale, **promotions** will be made available only to customers who would have qualified for the promotion had it been provided by AT&T directly. Promotions shall be available only for the term set forth in the applicable tariff.
3.	Promotions shall be available only for the term set forth in the applicable tariff.
4.	Some of AT&T's local exchange and toll Telecommunications Services are not available in certain central offices and areas.

Optional Daily Usage File

1. Upon written request from Sprint, AT&T will provide the ODUF service to Sprint pursuant to the terms and conditions set forth in this section.

2. Sprint shall furnish all relevant information required by AT&T for the provision of the ODUF.

3. The ODUF feed provides Sprint messages that were carried over the AT&T network and processed by AT&T for Sprint.

4. Charges for ODUF will appear on Sprint's monthly bills for the previous month's usage in arrears. The charges are as set forth in Exhibit D.

5. The ODUF feed will contain both rated and unrated messages. All messages will be in the standard Alliance for Telecommunications Industry Solutions (ATIS) Exchange Message Interface (EMI) record format.

6. ODUF Specifications

6.1 ODUF Message to be Transmitted

6.1.1 The following messages recorded by AT&T will be transmitted to Sprint:

6.1.1.1 Message recording for per use/per activation type services (examples: Three Way Calling, Verify, Interrupt, Call Return, etc.);

6.1.1.2 Measured local calls;

6.1.1.3 Directory Assistance messages;

6.1.1.4 IntraLATA Toll;

6.1.1.5 WATS and 800 Service;

6.1.1.6 N11;

6.1.1.7 Information Service Provider Messages;

6.1.1.8 OS Messages;

6.1.1.9 OS Message Attempted Calls;

6.1.1.10 Credit/Cancel Records; and

6.1.1.11 Usage for Voice Mail Message Service.

6.1.2 Rated Incollects (messages AT&T receives from other revenue accounting offices) appear on ODUF. Rated Incollects will be intermingled with AT&T recorded rated and unrated usage. Rated Incollects will not be packed separately.

6.1.3 AT&T will perform duplicate record checks on records processed to ODUF. Any duplicate messages detected will be deleted and not sent to Sprint.

6.1.4 In the event that Sprint detects a duplicate on ODUF they receive from AT&T, Sprint will drop the duplicate message and will not return the duplicate to AT&T.

6.2 ODUF Physical File Characteristics

6.2.1 ODUF will be distributed to Sprint via Secure File Transfer Protocol (FTP). The ODUF feed will be a variable block format. The data on the ODUF feed will be in a non-compacted EMI format (one hundred seventy-five (175) byte format plus modules). It will be created on a daily basis Monday through Friday except holidays. Details such as dataset name and delivery schedule will be addressed during negotiations of the distribution medium. There will be a maximum of one (1) dataset per workday per OCN. If AT&T determines the Secure FTP Mailbox is nearing capacity levels, AT&T may move the customer to CONNECT:Direct file delivery.

6.2.2 If the customer is moved, CONNECT:Direct data circuits (private line or dial-up) will be required between AT&T and Sprint for the purpose of data transmission. Where a dedicated line is required, Sprint will be responsible for ordering the circuit, overseeing its installation and coordinating the installation with AT&T. Sprint will also be responsible for any charges associated with this line. Equipment required on the AT&T end to attach the line to the mainframe computer and to transmit messages successfully on an ongoing basis will be negotiated on an individual case basis. Any costs incurred for such equipment will be Sprint's responsibility. Where a dial-up facility is required, dial circuits will be installed in the AT&T data center by AT&T and the associated charges assessed to Sprint. Additionally, all message toll charges associated with the use of the dial circuit by Sprint will be the responsibility of Sprint. Associated equipment on the AT&T end, including a modem, will be negotiated on an individual case basis between the Parties. All equipment, including modems and software, that is required on Sprint's end for the purpose of data transmission will be the responsibility of Sprint.

6.2.3 If Sprint utilizes FTP for data file transmission, purchase of the FTP software will be the responsibility of Sprint.

6.3 <u>ODUF Packing Specifications</u>

6.3.1 The data will be packed using ATIS EMI records. A pack will contain a minimum of one (1) message record or a maximum of ninety-nine thousand nine hundred and ninety-nine (99,999) message records plus a pack header record and a pack trailer record. One transmission can contain a maximum of ninety-nine (99) packs and a minimum of one (1) pack.

6.3.2 The OCN, From RAO, and Invoice Number will control the invoice sequencing. The From RAO will be used to identify to Sprint which AT&T RAO is sending the message. AT&T and Sprint will use the invoice sequencing to control data exchange. AT&T will be notified of sequence failures identified by Sprint and resend the data as appropriate.

6.4 <u>ODUF Pack Rejection</u>

6.4.1 Sprint will notify AT&T within one (1) business day of rejected packs (via the mutually agreed medium). Packs could be rejected because of pack sequencing discrepancies or a critical edit failure on the Pack Header or Pack Trailer records (e.g., out-of-balance condition on grand totals, invalid data populated). Standard

ATIS EMI error codes will be used. Sprint will not be required to return the actual rejected data to AT&T. Rejected packs will be corrected and retransmitted to Sprint by AT&T.

6.5 ODUF Control Data

6.5.1 Sprint will send one confirmation record per pack that is received from AT&T. This confirmation record will indicate Sprint's receipt of the pack and the acceptance or rejection of the pack. Pack Status Code(s) will be populated using standard ATIS EMI error codes for packs that were rejected by Sprint for reasons stated in the above section.

6.6 ODUF Testing

6.6.1 Upon request from Sprint, AT&T shall send ODUF test files to Sprint. The Parties agree to review and discuss the ODUF file content and/or format. For testing of usage results, AT&T shall request that Sprint set up a production (live) file. The live test may consist of Sprint's employees making test calls for the types of services Sprint requests on ODUF. These test calls are logged by Sprint, and the logs are provided to AT&T. These logs will be used to verify the files. Testing will be completed within thirty (30) days from the date on which the initial test file was sent.

Enhanced Optional Daily Usage File

1. Upon written request from Sprint, AT&T will provide the EODUF service to Sprint pursuant to the terms and conditions set forth in this section. EODUF will only be sent to existing ODUF subscribers who request the EODUF option.

2. Sprint shall furnish all relevant information required by AT&T for the provision of the EODUF.

3. The EODUF will provide usage data for local calls originating from resold Flat Rate Business and Residential Lines.

4. Charges for EODUF will appear on Sprint's monthly bills for the previous month's usage in arrears. The charges are as set forth in Exhibit D.

5. All messages will be in the standard ATIS EMI record format.

6. Messages that error in the billing system of Sprint will be the responsibility of Sprint. If, however, Sprint should encounter significant volumes of errored messages that prevent processing by Sprint within its systems, AT&T will work with Sprint to determine the source of the errors and the appropriate resolution.

7. EODUF Specifications

7.1 EODUF Usage To Be Transmitted

7.1.1 The following messages recorded by AT&T will be transmitted to Sprint:

7.1.1.1 Customer usage data for flat rated local calls originating from Sprint's customer lines (1FB or 1FR). The EODUF record for flat rate messages will include:

7.1.1.1.1 Date of Call

7.1.1.1.2 From Number

7.1.1.1.3 To Number

7.1.1.1.4 Connect Time

7.1.1.1.5 Conversation Time

7.1.1.1.6 Method of Recording

7.1.1.1.7 From RAO

7.1.1.1.8 Rate Class

7.1.1.1.9 Message Type

7.1.1.1.10 Billing Indicators

7.1.1.1.11 Bill to Number

7.1.2 AT&T will perform duplicate record checks on EODUF records processed to ODUF. Any duplicate messages detected will be deleted and not sent to Sprint.

7.1.3 In the event that Sprint detects a duplicate on EODUF they receive from AT&T, Sprint will drop the duplicate message and will not return the duplicate to AT&T.

7.2 EODUF Physical File Characteristics

7.2.1 EODUF feed will be distributed to Sprint via FTP. The EODUF messages will be intermingled among Sprint's ODUF messages. The EODUF will be a variable block format. The data on the EODUF will be in a non-compacted EMI format (one hundred seventy-five (175) byte format plus modules). It will be created on a daily basis Monday through Friday except holiday. If AT&T determines the Secure FTP mailbox is nearing capacity levels, AT&T may move the customer to CONNECT:Direct file delivery.

7.2.2 Data circuits (private line or dial-up) may be required between AT&T and Sprint for the purpose of data transmission. Where a dedicated line is required, Sprint will be responsible for ordering the circuit, overseeing its installation and coordinating the installation with AT&T. Sprint will also be responsible for any charges associated with this line. Equipment required on the AT&T end to attach the line to the mainframe computer and to transmit successfully ongoing will be negotiated on an individual case basis. Where a dial-up facility is required, dial circuits will be installed in the AT&T data center by AT&T and the associated charges assessed to Sprint. Additionally, all message toll charges associated with the use of the dial circuit by Sprint will be the responsibility of Sprint. Associated equipment on the AT&T end, including a modem, will be negotiated on an individual case basis between the Parties. All equipment, including modems and software, that is required on Sprint's end for the purpose of data transmission will be the responsibility of Sprint.

7.2.3 If Sprint utilizes FTP for data file transmission, purchase of the FTP software will be the responsibility of Sprint.

7.3 EODUF Packing Specifications

7.3.1 The data will be packed using ATIS EMI records. A pack will contain a minimum of one (1) message record or a maximum of ninety-nine thousand nine hundred and ninety-nine (99,999) message records plus a pack header record and a pack trailer record. One transmission can contain a maximum of ninety-nine (99) packs and a minimum of one (1) pack.

7.3.2 The OCN, From RAO, and Invoice Number will control the invoice sequencing. The From RAO will be used to identify to Sprint which AT&T RAO is sending the message. AT&T and Sprint will use the invoice sequencing to control data exchange. AT&T will be notified of sequence failures identified by Sprint and resend the data as appropriate.

RESALE DISCOUNTS & RATES - Alabama

Att: 1 Exh: D

CATEGORY	RATE ELEMENTS	Interim	Zone	BCS	USOC	RATES($)					Svc Order Submitted Elec per LSR	Svc Order Submitted Manually per LSR	Incremental Charge - Manual Svc Order vs. Electronic-1st	Incremental Charge - Manual Svc Order vs. Electronic-Add'l	Incremental Charge - Manual Svc Order vs. Electronic-Disc 1st	Incremental Charge - Manual Svc Order vs. Electronic-Disc Add'l
						Rec	Nonrecurring		Nonrecurring Disconnect		OSS Rates($)					
							First	Add'l	First	Add'l	SOMEC	SOMAN	SOMAN	SOMAN	SOMAN	SOMAN
RESALE APPLICABLE DISCOUNTS																
	Residence %					16.30										
	Business %					16.30										
	CSAs %					16.30										
OPERATIONS SUPPORT SYSTEMS (OSS) - "REGIONAL RATES"																
	NOTE: (1) CLEC should contact its contract negotiator if it prefers the "state specific" OSS charges as ordered by the State Commissions. The OSS charges currently contained in this rate exhibit are the AT&T "regional" service ordering charges. CLEC may elect either the state specific Commission ordered rates for the service ordering charges, or CLEC may elect the regional service ordering charge, however, CLEC can not obtain a mixture of the two regardless if CLEC has a interconnection contract established in each of the 9 states.															
	OSS - Electronic Service Order Charge, Per Local Service Request (LSR) - Resale Only				SOMEC		3.50	0.00	3.50	0.00						
	OSS - Manual Service Order Charge, Per Local Service Request (LSR) - Resale Only				SOMAN		19.99	0.00	19.99	0.00						
ODUF/EODUF SERVICES																
	OPTIONAL DAILY USAGE FILE (ODUF)															
	ODUF: Recording, per message					0.000011										
	ODUF: Message Processing, per message					0.004101										
	ODUF: Message Processing, per Magnetic Tape provisioned					42.67										
	ODUF: Data Transmission (CONNECT:DIRECT), per message					0.000094										
	ENHANCED OPTIONAL DAILY USAGE FILE (EODUF)															
	EODUF: Message Processing, per message					0.22										
SELECTIVE CALL ROUTING USING LINE CLASS CODES (SCR-LCC)																
	Selective Routing Per Unique Line Class Code Per Request Per Switch						84.70	84.70	14.11	14.11						
DIRECTORY ASSISTANCE CUSTOM BRANDING ANNOUNCEMENT via OLNS SOFTWARE																
	Recording of DA Custom Branded Announcement						3,000.00	3,000.00								
	Loading of DA Custom Branded Anouncement per Switch per OCN						1,170.00	1,170.00								
DIRECTORY ASSISTANCE UNBRANDING via OLNS SOFTWARE																
	Loading of DA per OCN (1 OCN per Order)						420.00	420.00								
	Loading of DA per Switch per OCN						16.00	16.00								
OPERATOR ASSISTANCE CUSTOM BRANDING ANNOUNCEMENT via OLNS SOFTWARE																
	Recording of Custom Branded OA Announcement						7,000.00	7,000.00								
	Loading of Custom Branded OA Announcement per shelf/NAV per OCN						500.00	500.00								
	Loading of OA Custom Branded Announcement per Switch per OCN						1,170.00	1,170.00								
OPERATOR ASSISTANCE UNBRANDING via OLNS SOFTWARE																
	Loading of OA per OCN (Regional)						1,200.00	1,200.00								

RESALE DISCOUNTS & RATES - Florida																	Att: 1 Exh: D
CATEGORY	RATE ELEMENTS	Interim	Zone	BCS	USOC	RATES($)					Svc Order Submitted Elec per LSR	Svc Order Submitted Manually per LSR	Incremental Charge - Manual Svc Order vs. Electronic-1st	Incremental Charge - Manual Svc Order vs. Electronic-Add'l	Incremental Charge - Manual Svc Order vs. Electronic-Disc 1st	Incremental Charge - Manual Svc Order vs. Electronic-Disc Add'l
						Rec	Nonrecurring		Nonrecurring Disconnect		OSS Rates($)					
							First	Add'l	First	Add'l	SOMEC	SOMAN	SOMAN	SOMAN	SOMAN	SOMAN
RESALE APPLICABLE DISCOUNTS																
	Residence %					21.83										
	Business %					16.81										
	CSAs %					16.81										
OPERATIONS SUPPORT SYSTEMS (OSS) - "REGIONAL RATES"																
NOTE: (1) CLEC should contact its contract negotiator if it prefers the "state specific" OSS charges as ordered by the State Commissions. The OSS charges currently contained in this rate exhibit are the AT&T "regional" service ordering charges. CLEC may elect either the state specific Commission ordered rates for the service ordering charges, or CLEC may elect the regional service ordering charge, however, CLEC can not obtain a mixture of the two regardless if CLEC has a interconnection contract established in each of the 9 states.																
	OSS - Electronic Service Order Charge, Per Local Service Request (LSR) - Resale Only				SOMEC		3.50	0.00	3.50	0.00						
	OSS - Manual Service Order Charge, Per Local Service Request (LSR) - Resale Only				SOMAN		19.99	0.00	19.99	0.00						
ODUF/EODUF SERVICES																
OPTIONAL DAILY USAGE FILE (ODUF)																
	ODUF: Recording, per message					0.0000071										
	ODUF: Message Processing, per message					0.002146										
	ODUF: Message Processing, per Magnetic Tape provisioned					35.91										
	ODUF: Data Transmission (CONNECT:DIRECT), per message					0.00010375										
ENHANCED OPTIONAL DAILY USAGE FILE (EODUF)																
	EODUF: Message Processing, per message					0.080698										
SELECTIVE CALL ROUTING USING LINE CLASS CODES (SCR-LCC)																
	Selective Routing Per Unique Line Class Code Per Request Per Switch						93.55	93.55	12.71	12.71						
DIRECTORY ASSISTANCE CUSTOM BRANDING ANNOUNCEMENT via OLNS SOFTWARE																
	Recording of DA Custom Branded Announcement						3,000.00	3,000.00								
	Loading of DA Custom Branded Anouncement per Switch per OCN						1,170.00	1,170.00								
DIRECTORY ASSISTANCE UNBRANDING via OLNS SOFTWARE																
	Loading of DA per OCN (1 OCN per Order)						420.00	420.00								
	Loading of DA per Switch per OCN						16.00	16.00								
OPERATOR ASSISTANCE CUSTOM BRANDING ANNOUNCEMENT via OLNS SOFTWARE																
	Recording of Custom Branded OA Announcement						7,000.00	7,000.00								
	Loading of Custom Branded OA Announcement per shelf/NAV per OCN						500.00	500.00								
	Loading of OA Custom Branded Announcement per Switch per OCN						1,170.00	1,170.00								
OPERATOR ASSISTANCE UNBRANDING via OLNS SOFTWARE																
	Loading of OA per OCN (Regional)						1,200.00	1,200.00								

RESALE DISCOUNTS & RATES - Georgia

Att: 1 Exh: D

CATEGORY	RATE ELEMENTS	Interim	Zone	BCS	USOC	RATES($)					Svc Order Submitted Elec per LSR	Svc Order Submitted Manually per LSR	Incremental Charge - Manual Svc Order vs. Electronic-1st	Incremental Charge - Manual Svc Order vs. Electronic-Add'l	Incremental Charge - Manual Svc Order vs. Electronic-Disc 1st	Incremental Charge - Manual Svc Order vs. Electronic-Disc Add'l
						Rec	Nonrecurring		Nonrecurring Disconnect		OSS Rates($)					
							First	Add'l	First	Add'l	SOMEC	SOMAN	SOMAN	SOMAN	SOMAN	SOMAN
RESALE APPLICABLE DISCOUNTS																
	Residence %					20.30										
	Business %					17.30										
	CSAs %					17.30										
OPERATIONS SUPPORT SYSTEMS (OSS) - "REGIONAL RATES"																
	NOTE: (1) CLEC should contact its contract negotiator if it prefers the "state specific" OSS charges as ordered by the State Commissions. The OSS charges currently contained in this rate exhibit are the AT&T "regional" service ordering charges. CLEC may elect either the state specific Commission ordered rates for the service ordering charges, or CLEC may elect the regional service ordering charge, however, CLEC can not obtain a mixture of the two regardless if CLEC has a interconnection contract established in each of the 9 states.															
	OSS - Electronic Service Order Charge, Per Local Service Request (LSR) - Resale Only				SOMEC		3.50	0.00	3.50	0.00						
	OSS - Manual Service Order Charge, Per Local Service Request (LSR) - Resale Only				SOMAN		19.99	0.00	19.99	0.00						
ODUF/EODUF SERVICES																
	OPTIONAL DAILY USAGE FILE (ODUF)															
	ODUF: Recording, per message					0.000007										
	ODUF: Message Processing, per message					0.002165										
	ODUF: Message Processing, per Magnetic Tape provisioned					36.02										
	ODUF: Data Transmission (CONNECT:DIRECT), per message					0.00010888										
	ENHANCED OPTIONAL DAILY USAGE FILE (EODUF)															
	EODUF: Message Processing, per message					0.229077										
SELECTIVE CALL ROUTING USING LINE CLASS CODES (SCR-LCC)																
	Selective Routing Per Unique Line Class Code Per Request Per Switch						102.19	61.15	12.68	6.34						
DIRECTORY ASSISTANCE CUSTOM BRANDING ANNOUNCEMENT via OLNS SOFTWARE																
	Recording of DA Custom Branded Announcement						3,000.00	3,000.00								
	Loading of DA Custom Branded Anouncement per Switch per OCN						1,170.00	1,170.00								
DIRECTORY ASSISTANCE UNBRANDING via OLNS SOFTWARE																
	Loading of DA per OCN (1 OCN per Order)						420.00	420.00								
	Loading of DA per Switch per OCN						16.00	16.00								
OPERATOR ASSISTANCE CUSTOM BRANDING ANNOUNCEMENT via OLNS SOFTWARE																
	Recording of Custom Branded OA Announcement						7,000.00	7,000.00								
	Loading of Custom Branded OA Announcement per shelf/NAV per OCN						500.00	500.00								
	Loading of OA Custom Branded Announcement per Switch per OCN						1,170.00	1,170.00								
OPERATOR ASSISTANCE UNBRANDING via OLNS SOFTWARE																
	Loading of OA per OCN (Regional)						1,200.00	1,200.00								

RESALE DISCOUNTS & RATES - Kentucky

Att: 1 Exh: D

CATEGORY	RATE ELEMENTS	Interim	Zone	BCS	USOC	RATES($)					Svc Order Submitted Elec per LSR	Svc Order Submitted Manually per LSR	Incremental Charge - Manual Svc Order vs. Electronic-1st	Incremental Charge - Manual Svc Order vs. Electronic-Add'l	Incremental Charge - Manual Svc Order vs. Electronic-Disc 1st	Incremental Charge - Manual Svc Order vs. Electronic-Disc Add'l
						Rec	Nonrecurring		Nonrecurring Disconnect		OSS Rates($)					
							First	Add'l	First	Add'l	SOMEC	SOMAN	SOMAN	SOMAN	SOMAN	SOMAN
RESALE APPLICABLE DISCOUNTS																
	Residence %					16.79										
	Business %					15.54										
	CSAs %					15.54										
OPERATIONS SUPPORT SYSTEMS (OSS) - "REGIONAL RATES"																
	NOTE: (1) CLEC should contact its contract negotiator if it prefers the "state specific" OSS charges as ordered by the State Commissions. The OSS charges currently contained in this rate exhibit are the AT&T "regional" service ordering charges. CLEC may elect either the state specific Commission ordered rates for the service ordering charges, or CLEC may elect the regional service ordering charge, however, CLEC can not obtain a mixture of the two regardless if CLEC has a interconnection contract established in each of the 9 states.															
	OSS - Electronic Service Order Charge, Per Local Service Request (LSR) - Resale Only				SOMEC		3.50	0.00	3.50	0.00						
	OSS - Manual Service Order Charge, Per Local Service Request (LSR) - Resale Only				SOMAN		19.99	0.00	19.99	0.00						
ODUF/EODUF SERVICES																
	OPTIONAL DAILY USAGE FILE (ODUF)															
	ODUF: Recording, per message					0.0000136										
	ODUF: Message Processing, per message					0.002506										
	ODUF: Message Processing, per Magnetic Tape provisioned					35.90										
	ODUF: Data Transmission (CONNECT:DIRECT), per message					0.00010372										
	ENHANCED OPTIONAL DAILY USAGE FILE (EODUF)															
	EODUF: Message Processing, per message					0.235889										
SELECTIVE CALL ROUTING USING LINE CLASS CODES (SCR-LCC)																
	Selective Routing Per Unique Line Class Code Per Request Per Switch						93.53	93.53	15.58	15.58						
DIRECTORY ASSISTANCE CUSTOM BRANDING ANNOUNCEMENT via OLNS SOFTWARE																
	Recording of DA Custom Branded Announcement						3,000.00	3,000.00								
	Loading of DA Custom Branded Anouncement per Switch per OCN						1,170.00	1,170.00								
DIRECTORY ASSISTANCE UNBRANDING via OLNS SOFTWARE																
	Loading of DA per OCN (1 OCN per Order)						420.00	420.00								
	Loading of DA per Switch per OCN						16.00	16.00								
OPERATOR ASSISTANCE CUSTOM BRANDING ANNOUNCEMENT via OLNS SOFTWARE																
	Recording of Custom Branded OA Announcement						7,000.00	7,000.00								
	Loading of Custom Branded OA Announcement per shelf/NAV per OCN						500.00	500.00								
	Loading of OA Custom Branded Announcement per Switch per OCN						1,170.00	1,170.00								
OPERATOR ASSISTANCE UNBRANDING via OLNS SOFTWARE																
	Loading of OA per OCN (Regional)						1,200.00	1,200.00								

RESALE DISCOUNTS & RATES - Louisiana

Att: 1 Exh: D

CATEGORY	RATE ELEMENTS	Interim	Zone	BCS	USOC	RATES($)					Svc Order Submitted Elec per LSR	Svc Order Submitted Manually per LSR	Incremental Charge - Manual Svc Order vs. Electronic-1st	Incremental Charge - Manual Svc Order vs. Electronic-Add'l	Incremental Charge - Manual Svc Order vs. Electronic-Disc 1st	Incremental Charge - Manual Svc Order vs. Electronic-Disc Add'l
						Rec	Nonrecurring		Nonrecurring Disconnect		OSS Rates($)					
							First	Add'l	First	Add'l	SOMEC	SOMAN	SOMAN	SOMAN	SOMAN	SOMAN
RESALE APPLICABLE DISCOUNTS																
	Residence %					20.72										
	Business %					20.72										
	CSAs %					9.05										
OPERATIONS SUPPORT SYSTEMS (OSS) - "REGIONAL RATES"																
	NOTE: (1) CLEC should contact its contract negotiator if it prefers the "state specific" OSS charges as ordered by the State Commissions. The OSS charges currently contained in this rate exhibit are the AT&T "regional" service ordering charges. CLEC may elect either the state specific Commission ordered rates for the service ordering charges, or CLEC may elect the regional service ordering charge, however, CLEC can not obtain a mixture of the two regardless if CLEC has a interconnection contract established in each of the 9 states.															
	OSS - Electronic Service Order Charge, Per Local Service Request (LSR) - Resale Only				SOMEC		3.50	0.00	3.50	0.00						
	OSS - Manual Service Order Charge, Per Local Service Request (LSR) - Resale Only				SOMAN		19.99	0.00	19.99	0.00						
ODUF/EODUF SERVICES																
	OPTIONAL DAILY USAGE FILE (ODUF)															
	ODUF: Recording, per message					0.0000117										
	ODUF: Message Processing, per message					0.004641										
	ODUF: Message Processing, per Magnetic Tape provisioned					48.45										
	ODUF: Data Transmission (CONNECT:DIRECT), per message					0.00010568										
	ENHANCED OPTIONAL DAILY USAGE FILE (EODUF)															
	EODUF: Message Processing, per message					0.250015										
SELECTIVE CALL ROUTING USING LINE CLASS CODES (SCR-LCC)																
	Selective Routing Per Unique Line Class Code Per Request Per Switch						82.25	82.25								
DIRECTORY ASSISTANCE CUSTOM BRANDING ANNOUNCEMENT via OLNS SOFTWARE																
	Recording of DA Custom Branded Announcement						3,000.00	3,000.00								
	Loading of DA Custom Branded Anouncement per Switch per OCN						1,170.00	1,170.00								
DIRECTORY ASSISTANCE UNBRANDING via OLNS SOFTWARE																
	Loading of DA per OCN (1 OCN per Order)						420.00	420.00								
	Loading of DA per Switch per OCN						16.00	16.00								
OPERATOR ASSISTANCE CUSTOM BRANDING ANNOUNCEMENT via OLNS SOFTWARE																
	Recording of Custom Branded OA Announcement						7,000.00	7,000.00								
	Loading of Custom Branded OA Announcement per shelf/NAV per OCN						500.00	500.00								
	Loading of OA Custom Branded Announcement per Switch per OCN						1,170.00	1,170.00								
OPERATOR ASSISTANCE UNBRANDING via OLNS SOFTWARE																
	Loading of OA per OCN (Regional)						1,200.00	1,200.00								

RESALE DISCOUNTS & RATES - Mississippi

Att: 1 Exh: D

CATEGORY	RATE ELEMENTS	Interim	Zone	BCS	USOC	RATES($)					Svc Order Submitted Elec per LSR	Svc Order Submitted Manually per LSR	Incremental Charge - Manual Svc Order vs. Electronic-1st	Incremental Charge - Manual Svc Order vs. Electronic-Add'l	Incremental Charge - Manual Svc Order vs. Electronic-Disc 1st	Incremental Charge - Manual Svc Order vs. Electronic-Disc Add'l
						Rec	Nonrecurring		Nonrecurring Disconnect		OSS Rates($)					
							First	Add'l	First	Add'l	SOMEC	SOMAN	SOMAN	SOMAN	SOMAN	SOMAN
RESALE APPLICABLE DISCOUNTS																
	Residence %					15.75										
	Business %					15.75										
	CSAs %					15.75										
OPERATIONS SUPPORT SYSTEMS (OSS) - "REGIONAL RATES"																
	NOTE: (1) CLEC should contact its contract negotiator if it prefers the "state specific" OSS charges as ordered by the State Commissions. The OSS charges currently contained in this rate exhibit are the AT&T "regional" service ordering charges. CLEC may elect either the state specific Commission ordered rates for the service ordering charges, or CLEC may elect the regional service ordering charge, however, CLEC can not obtain a mixture of the two regardless if CLEC has a interconnection contract established in each of the 9 states.															
	OSS - Electronic Service Order Charge, Per Local Service Request (LSR) - Resale Only				SOMEC		3.50	0.00	3.50	0.00						
	OSS - Manual Service Order Charge, Per Local Service Request (LSR) - Resale Only				SOMAN		19.99	0.00	19.99	0.00						
ODUF/EODUF SERVICES																
	OPTIONAL DAILY USAGE FILE (ODUF)															
	ODUF: Recording, per message					0.0000063										
	ODUF: Message Processing, per message					0.004707										
	ODUF: Message Processing, per Magnetic Tape provisioned					49.04										
	ODUF: Data Transmission (CONNECT:DIRECT), per message					0.00010669										
	ENHANCED OPTIONAL DAILY USAGE FILE (EODUF)															
	EODUF: Message Processing, per message					0.250424										
SELECTIVE CALL ROUTING USING LINE CLASS CODES (SCR-LCC)																
	Selective Routing Per Unique Line Class Code Per Request Per Switch						85.19	85.19	14.19	14.19						
DIRECTORY ASSISTANCE CUSTOM BRANDING ANNOUNCEMENT via OLNS SOFTWARE																
	Recording of DA Custom Branded Announcement						3,000.00	3,000.00								
	Loading of DA Custom Branded Anouncement per Switch per OCN						1,170.00	1,170.00								
DIRECTORY ASSISTANCE UNBRANDING via OLNS SOFTWARE																
	Loading of DA per OCN (1 OCN per Order)						420.00	420.00								
	Loading of DA per Switch per OCN						16.00	16.00								
OPERATOR ASSISTANCE CUSTOM BRANDING ANNOUNCEMENT via OLNS SOFTWARE																
	Recording of Custom Branded OA Announcement						7,000.00	7,000.00								
	Loading of Custom Branded OA Announcement per shelf/NAV per OCN						500.00	500.00								
	Loading of OA Custom Branded Announcement per Switch per OCN						1,170.00	1,170.00								
OPERATOR ASSISTANCE UNBRANDING via OLNS SOFTWARE																
	Loading of OA per OCN (Regional)						1,200.00	1,200.00								

RESALE DISCOUNTS & RATES - North Carolina

Att: 1 Exh: D

CATEGORY	RATE ELEMENTS	Interim	Zone	BCS	USOC	RATES($)					Svc Order Submitted Elec per LSR	Svc Order Submitted Manually per LSR	Incremental Charge - Manual Svc Order vs. Electronic-1st	Incremental Charge - Manual Svc Order vs. Electronic-Add'l	Incremental Charge - Manual Svc Order vs. Electronic-Disc 1st	Incremental Charge - Manual Svc Order vs. Electronic-Disc Add'l
						Rec	Nonrecurring		Nonrecurring Disconnect		OSS Rates($)					
							First	Add'l	First	Add'l	SOMEC	SOMAN	SOMAN	SOMAN	SOMAN	SOMAN
RESALE APPLICABLE DISCOUNTS																
	Residence %					21.50										
	Business %					17.60										
	CSAs %					17.60										
OPERATIONS SUPPORT SYSTEMS (OSS) - "REGIONAL RATES"																
	NOTE: (1) CLEC should contact its contract negotiator if it prefers the "state specific" OSS charges as ordered by the State Commissions. The OSS charges currently contained in this rate exhibit are the AT&T "regional" service ordering charges. CLEC may elect either the state specific Commission ordered rates for the service ordering charges, or CLEC may elect the regional service ordering charge, however, CLEC can not obtain a mixture of the two regardless if CLEC has a interconnection contract established in each of the 9 states.															
	OSS - Electronic Service Order Charge, Per Local Service Request (LSR) - Resale Only				SOMEC		3.50	0.00	3.50	0.00						
	OSS - Manual Service Order Charge, Per Local Service Request (LSR) - Resale Only				SOMAN		19.99	0.00	19.99	0.00						
ODUF/EODUF SERVICES																
	OPTIONAL DAILY USAGE FILE (ODUF)															
	ODUF: Recording, per message					0.0000174										
	ODUF: Message Processing, per message					0.001647										
	ODUF: Message Processing, per Magnetic Tape provisioned					35.91										
	ODUF: Data Transmission (CONNECT:DIRECT), per message					0.00011029										
	ENHANCED OPTIONAL DAILY USAGE FILE (EODUF)															
	EODUF: Message Processing, per message					0.131005										
SELECTIVE CALL ROUTING USING LINE CLASS CODES (SCR-LCC)																
	Selective Routing Per Unique Line Class Code Per Request Per Switch						188.59									
DIRECTORY ASSISTANCE CUSTOM BRANDING ANNOUNCEMENT via OLNS SOFTWARE																
	Recording of DA Custom Branded Announcement						3,000.00	3,000.00								
	Loading of DA Custom Branded Anouncement per Switch per OCN						1,170.00	1,170.00								
DIRECTORY ASSISTANCE UNBRANDING via OLNS SOFTWARE																
	Loading of DA per OCN (1 OCN per Order)						420.00	420.00								
	Loading of DA per Switch per OCN						16.00	16.00								
OPERATOR ASSISTANCE CUSTOM BRANDING ANNOUNCEMENT via OLNS SOFTWARE																
	Recording of Custom Branded OA Announcement						7,000.00	7,000.00								
	Loading of Custom Branded OA Announcement per shelf/NAV per OCN						500.00	500.00								
	Loading of OA Custom Branded Announcement per Switch per OCN						1,170.00	1,170.00								
OPERATOR ASSISTANCE UNBRANDING via OLNS SOFTWARE																
	Loading of OA per OCN (Regional)						1,200.00	1,200.00								

RESALE DISCOUNTS & RATES - South Carolina

Att: 1 Exh: D

CATEGORY	RATE ELEMENTS	Interim	Zone	BCS	USOC	RATES($)					Svc Order Submitted Elec per LSR	Svc Order Submitted Manually per LSR	Incremental Charge - Manual Svc Order vs. Electronic-1st	Incremental Charge - Manual Svc Order vs. Electronic-Add'l	Incremental Charge - Manual Svc Order vs. Electronic-Disc 1st	Incremental Charge - Manual Svc Order vs. Electronic-Disc Add'l
						Rec	Nonrecurring		Nonrecurring Disconnect		OSS Rates($)					
							First	Add'l	First	Add'l	SOMEC	SOMAN	SOMAN	SOMAN	SOMAN	SOMAN
RESALE APPLICABLE DISCOUNTS																
	Residence %					14.80										
	Business %					14.80										
	CSAs %					8.98										
OPERATIONS SUPPORT SYSTEMS (OSS) - "REGIONAL RATES"																
	NOTE: (1) CLEC should contact its contract negotiator if it prefers the "state specific" OSS charges as ordered by the State Commissions. The OSS charges currently contained in this rate exhibit are the AT&T "regional" service ordering charges. CLEC may elect either the state specific Commission ordered rates for the service ordering charges, or CLEC may elect the regional service ordering charge, however, CLEC can not obtain a mixture of the two regardless if CLEC has a interconnection contract established in each of the 9 states.															
	OSS - Electronic Service Order Charge, Per Local Service Request (LSR) - Resale Only				SOMEC		3.50	0.00	3.50	0.00						
	OSS - Manual Service Order Charge, Per Local Service Request (LSR) - Resale Only				SOMAN		19.99	0.00	19.99	0.00						
ODUF/EODUF SERVICES																
	OPTIONAL DAILY USAGE FILE (ODUF)															
	ODUF: Recording, per message					0.0000216										
	ODUF: Message Processing, per message					0.004704										
	ODUF: Message Processing, per Magnetic Tape provisioned					48.87										
	ODUF: Data Transmission (CONNECT:DIRECT), per message					0.00010863										
	ENHANCED OPTIONAL DAILY USAGE FILE (EODUF)															
	EODUF: Message Processing, per message					0.258301										
SELECTIVE CALL ROUTING USING LINE CLASS CODES (SCR-LCC)																
	Selective Routing Per Unique Line Class Code Per Request Per Switch						84.89	84.89	14.14	14.14						
DIRECTORY ASSISTANCE CUSTOM BRANDING ANNOUNCEMENT via OLNS SOFTWARE																
	Recording of DA Custom Branded Announcement						3,000.00	3,000.00								
	Loading of DA Custom Branded Anouncement per Switch per OCN						1,170.00	1,170.00								
DIRECTORY ASSISTANCE UNBRANDING via OLNS SOFTWARE																
	Loading of DA per OCN (1 OCN per Order)						420.00	420.00								
	Loading of DA per Switch per OCN						16.00	16.00								
OPERATOR ASSISTANCE CUSTOM BRANDING ANNOUNCEMENT via OLNS SOFTWARE																
	Recording of Custom Branded OA Announcement						7,000.00	7,000.00								
	Loading of Custom Branded OA Announcement per shelf/NAV per OCN						500.00	500.00								
	Loading of OA Custom Branded Announcement per Switch per OCN						1,170.00	1,170.00								
OPERATOR ASSISTANCE UNBRANDING via OLNS SOFTWARE																
	Loading of OA per OCN (Regional)						1,200.00	1,200.00								

RESALE DISCOUNTS & RATES - Tennessee

Att: 1 Exh: D

CATEGORY	RATE ELEMENTS	Interim	Zone	BCS	USOC	RATES($)					Svc Order Submitted Elec per LSR	Svc Order Submitted Manually per LSR	Incremental Charge - Manual Svc Order vs. Electronic-1st	Incremental Charge - Manual Svc Order vs. Electronic-Add'l	Incremental Charge - Manual Svc Order vs. Electronic-Disc 1st	Incremental Charge - Manual Svc Order vs. Electronic-Disc Add'l
						Rec	Nonrecurring		Nonrecurring Disconnect		OSS Rates($)					
							First	Add'l	First	Add'l	SOMEC	SOMAN	SOMAN	SOMAN	SOMAN	SOMAN
RESALE APPLICABLE DISCOUNTS																
	Residence %					16.00										
	Business %					16.00										
	CSAs %					16.00										
OPERATIONS SUPPORT SYSTEMS (OSS) - "REGIONAL RATES"																
	NOTE: (1) CLEC should contact its contract negotiator if it prefers the "state specific" OSS charges as ordered by the State Commissions. The OSS charges currently contained in this rate exhibit are the AT&T "regional" service ordering charges. CLEC may elect either the state specific Commission ordered rates for the service ordering charges, or CLEC may elect the regional service ordering charge, however, CLEC can not obtain a mixture of the two regardless if CLEC has a interconnection contract established in each of the 9 states.															
	OSS - Electronic Service Order Charge, Per Local Service Request (LSR) - Resale Only				SOMEC		3.50	0.00	3.50	0.00						
	OSS - Manual Service Order Charge, Per Local Service Request (LSR) - Resale Only				SOMAN		19.99	0.00	19.99	0.00						
ODUF/EODUF SERVICES																
	OPTIONAL DAILY USAGE FILE (ODUF)															
	ODUF: Recording, per message					0.0000044										
	ODUF: Message Processing, per message					0.002446										
	ODUF: Message Processing, per Magnetic Tape provisioned					35.54										
	ODUF: Data Transmission (CONNECT:DIRECT), per message					0.0000339										
	ENHANCED OPTIONAL DAILY USAGE FILE (EODUF)															
	EODUF: Message Processing, per message					0.229779										
SELECTIVE CALL ROUTING USING LINE CLASS CODES (SCR-LCC)																
	Selective Routing Per Unique Line Class Code Per Request Per Switch						179.60	179.60								
DIRECTORY ASSISTANCE CUSTOM BRANDING ANNOUNCEMENT via OLNS SOFTWARE																
	Recording of DA Custom Branded Announcement						3,000.00									
	Loading of DA Custom Branded Anouncement per Switch per OCN						1,170.00									
DIRECTORY ASSISTANCE UNBRANDING via OLNS SOFTWARE																
	Loading of DA per OCN (1 OCN per Order)						420.00	420.00								
	Loading of DA per Switch per OCN						16.00	16.00								
OPERATOR ASSISTANCE CUSTOM BRANDING ANNOUNCEMENT via OLNS SOFTWARE																
	Recording of Custom Branded OA Announcement						7,000.00	7,000.00								
	Loading of Custom Branded OA Announcement per shelf/NAV per OCN						500.00	500.00								
	Loading of OA Custom Branded Announcement per Switch per OCN						1,170.00	1,170.00								
OPERATOR ASSISTANCE UNBRANDING via OLNS SOFTWARE																
	Loading of OA per OCN (Regional)						1,200.00	1,200.00								

Attachment 2

Network Elements and Other Services

TABLE OF CONTENTS

1 INTRODUCTION 3

2 LOOPS 7

3 LINE SPLITTING 30

4 LOCAL SWITCHING 31

5 UNBUNDLED NETWORK ELEMENT COMBINATIONS 31

6 DEDICATED TRANSPORT AND DARK FIBER TRANSPORT 34

7 AUTOMATIC LOCATION IDENTIFICATION/DATA MANAGEMENT SYSTEM (ALI/DMS) 43

Rates ..... Exhibit A

Rates ..... Exhibit B

ACCESS TO NETWORK ELEMENTS AND OTHER SERVICES

1 Introduction

1.1 This Attachment is subject to the General Terms and Conditions of this Agreement and sets forth rates, terms and conditions for unbundled network elements (Network Elements) and combinations of Network Elements (Combinations) that AT&T offers to Sprint for Sprint's provision of Telecommunications Services. AT&T shall offer Sprint access to Network Elements and Combinations in accordance with its obligations under Section 251(c)(3) of the Act and the orders, rules and regulations promulgated thereunder by the FCC(47 C.F.R. Part 51) and the Commission as interpreted by a court of competent jurisdiction. Additionally, this Attachment sets forth the rates, terms and conditions for other facilities and services AT&T makes available to Sprint (Other Services). Additionally, the provision of a particular Network Element or Other Service may require Sprint to purchase other Network Elements or services. In the event of a conflict between this Attachment and any other section or provision of this Agreement, the provisions of this Attachment shall control.

1.2 The rates for each Network Element, Combinations and Other Services are set forth in Exhibits A and B. Where a Commission has adopted rates for network elements or services provided pursuant to this Attachment as of the Effective Date of the Amendment, it is the intent of the Parties that the rate exhibits incorporated into this Agreement will be those Commission adopted rates. If no rate is identified in this Agreement, the rate will be as set forth in the applicable AT&T tariff or as negotiated by the Parties upon request by either Party. If Sprint purchases service(s) from a tariff, all terms and conditions and rates as set forth in such tariff shall apply. A one-month minimum billing period shall apply to all Network Elements, Combinations and Other Services.

1.3 Sprint may purchase and use Network Elements and Other Services from AT&T in accordance with 47 C.F.R § 51.309.

1.4 The Parties shall comply with the requirements as set forth in the technical references within this Attachment 2.

1.5 Sprint shall not obtain a Network Element for the exclusive provision of mobile wireless services or interexchange services.

1.6 <u>Conversion of Wholesale Services to Network Elements or Network Elements to Wholesale Services.</u> Upon request, AT&T shall convert a wholesale service, or group of wholesale services, to the equivalent Network Element or Combination that is available to Sprint pursuant to Section 251 of the Act and under this Agreement or convert a Network Element or Combination that is available to Sprint pursuant to Section 251 of the Act and under this Agreement to an equivalent wholesale service or group of wholesale services offered by AT&T

(collectively "Conversion"). AT&T shall charge the applicable nonrecurring switch-as-is rates for Conversions to specific Network Elements or Combinations found in Exhibit A. AT&T shall also charge the same nonrecurring switch-as-is rates when converting from Network Elements or Combinations. Any rate change resulting from the Conversion will be effective as of the next billing cycle following AT&T's receipt of a complete and accurate Conversion request from Sprint. A Conversion shall be considered termination for purposes of any volume and/or term commitments and/or grandfathered status between Sprint and AT&T. Any change from a wholesale service/group of wholesale services to a Network Element/Combination, or from a Network Element/Combination to a wholesale service/group of wholesale services, that requires a physical rearrangement will not be considered to be a Conversion for purposes of this Agreement. AT&T will not require physical rearrangements if the Conversion can be completed through record changes only. Orders for Conversions will be handled in accordance with the guidelines set forth in the Ordering Guidelines and Processes and CLEC Information Packages as referenced in Sections 1.13.1 and 1.13.2 below.

1.7 Except to the extent expressly provided otherwise in this Attachment, Sprint may not maintain unbundled network elements or combinations of unbundled network elements, that are no longer offered pursuant to this Agreement (collectively "Arrangements"). In the event AT&T determines that Sprint has in place any Arrangements after the Effective Date of this Agreement, AT&T will provide Sprint with thirty (30) days written notice to disconnect or convert such Arrangements and such conversion will be in accordance with Section 1.6 to the extent the conversion constitutes a Conversion pursuant to Section 1.6. If Sprint fails to submit orders to disconnect or convert such Arrangements within such thirty (30) day period of receiving such notice, AT&T will transition such circuits to the equivalent tariffed AT&T service(s). Those circuits identified and transitioned by AT&T pursuant to this Section 1.7 shall be subject to all applicable disconnect charges as set forth in this Agreement and the full nonrecurring charges for installation of the equivalent tariffed AT&T service as set forth in AT&T's tariffs. The applicable recurring tariff charge shall apply to each circuit as of the Effective Date of this Amendment.

1.8 Prior to submitting an order pursuant to this Agreement for high capacity (DS1 or above) Dedicated Transport or high capacity Loops, Sprint shall undertake a reasonably diligent inquiry to determine whether Sprint is entitled to unbundled access to such Network Elements in accordance with the terms of this Agreement. By submitting any such order, Sprint self-certifies that to the best of Sprint's knowledge, the high capacity Dedicated Transport or high capacity Loop requested is available as a Network Element pursuant to this Agreement. Upon receiving such order, AT&T shall process the request in reliance upon Sprint's self-certification. To the extent AT&T believes that such request does not comply with the terms of this Agreement, AT&T shall seek dispute resolution in accordance with the General Terms and Conditions of this Agreement. In the event such dispute is resolved in AT&T's favor, AT&T shall bill Sprint the

difference between the rates for such circuits pursuant to this Agreement and the applicable nonrecurring and recurring charges for the equivalent tariffed service from the date of installation to the date the circuit is transitioned to the equivalent tariffed service. Within thirty (30) days following a decision finding in AT&T's favor, Sprint shall submit a spreadsheet identifying those non-compliant circuits that Sprint ordered pursuant to self-certification to be transitioned to tariffed services or disconnected.

1.9 Sprint may utilize Network Elements and Other Services to provide services in accordance with this Agreement, as long as such services are consistent with industry standards and applicable AT&T Technical References.

1.10 AT&T will perform Routine Network Modifications (RNM) in accordance with FCC 47 C.F.R. § 51.319 (a)(7) and (e)(4) for Loops and Dedicated Transport provided under this Attachment. If AT&T performs such RNMs during normal operations and has recovered the costs for performing such modifications through the rates set forth in Exhibit A, then AT&T shall perform such RNM at no additional charge. RNM shall be performed within the intervals established for the Network Element and subject to the performance measurements and associated remedies set forth in Attachment 9 of this Agreement to the extent such RNM were anticipated in the setting of such intervals. If AT&T has not recovered the costs of such RNM in the rates set forth in Exhibit A, then such request will be handled as a project on an individual case basis. AT&T will provide a price quote for the request and, upon receipt of payment from Sprint, AT&T shall perform the RNM.

1.11 <u>Commingling of Services</u>

1.11.1 Commingling means the connecting, attaching, or otherwise linking of a Network Element, or a Combination, to one or more Telecommunications Services or facilities that Sprint has obtained at wholesale from AT&T, or the combining of a Network Element or Combination with one or more such wholesale Telecommunications Services or facilities. Sprint must comply with all rates, terms or conditions applicable to such wholesale Telecommunications Services or facilities.

1.11.2 Subject to the limitations set forth elsewhere in this Attachment, AT&T shall not deny access to a Network Element or a Combination on the grounds that one or more of the elements: 1) is connected to, attached to, linked to, or combined with such a facility or service obtained from AT&T; or 2) shares part of AT&T's network with access services or inputs for mobile wireless services and/or interexchange services.

1.11.3 Unless otherwise agreed to by the Parties, the Network Element portion of a commingled circuit will be billed at the rates set forth in this Agreement and the remainder of the circuit or service will be billed in accordance with AT&T's tariffed rates or rates set forth in a separate agreement between the Parties.

1.11.4 When multiplexing equipment is attached to a commingled circuit, the multiplexing equipment will be billed from the same agreement or tariff as the higher bandwidth circuit. Central Office Channel Interfaces (COCI) will be billed from the same agreement or tariff as the lower bandwidth circuit.

1.11.5 Notwithstanding any other provision of this Agreement, AT&T shall not be obligated to commingle or combine Network Elements or Combinations with any service, network element or other offering that it is obligated to make available only pursuant to Section 271 of the Act.

1.12 Terms and conditions for order cancellation charges and Service Date Advancement Charges will apply in accordance with Attachment 6 and are incorporated herein by this reference. The charges shall be as set forth in Exhibit A.

1.13 Ordering Guidelines and Processes

1.13.1 For information regarding Ordering Guidelines and Processes for various Network Elements, Combinations and Other Services, Sprint should refer to the "Guides" section of the AT&T Interconnection Web site, which is incorporated herein by reference, as amended from time to time. The Web site address is: http//www.interconnection.bellsouth.com/.

1.13.2 Additional information may also be found in the individual CLEC Information Packages, which are incorporated herein by reference, as amended from time to time, located at the "CLEC UNE Products" Web site address: http://www.interconnection.bellsouth.com/guides/html/unes.html.

1.13.3 The provisioning of Network Elements, Combinations and Other Services to Sprint's Collocation Space will require cross-connections within the central office to connect the Network Element, Combinations or Other Services to the demarcation point associated with Sprint's Collocation Space. These cross-connects are separate components that are not considered a part of the Network Element, Combinations or Other Services and, thus, have a separate charge pursuant to this Agreement.

1.13.4 Testing/Trouble Reporting.

1.13.4.1 Sprint will be responsible for testing and isolating troubles on Network Elements. Sprint must test and isolate trouble to the AT&T network before reporting the trouble to the UNE Customer Wholesale Interconnection Network Services (CWINS) Center. Upon request from AT&T at the time of the trouble report, Sprint will be required to provide the results of the Sprint test which indicate a problem on the AT&T network.

1.13.4.2 Once Sprint has isolated a trouble to the AT&T network, and has issued a trouble report to AT&T, AT&T will take the actions necessary to repair the Network

Element when trouble is found. AT&T will repair its network facilities to its wholesale customers in the same time frames that AT&T repairs similar services to its retail End Users.

1.13.4.3 If Sprint reports a trouble on a AT&T Network Element and no trouble is found in AT&T's network, AT&T will charge Sprint a Maintenance of Service Charge for any dispatching and testing (both inside and outside the CO) required by AT&T in order to confirm the Network Element's working status. AT&T will assess the applicable Maintenance of Service rates from BellSouth's FCC No.1 Tariff, Section 13.3.1. The Parties disagree on the appropriate basis (i.e., TELRIC or Access Tariff) for rates in this Section 1.13.4.3 and reserve the right to pursue resolution of this issue through the appropriate forum.

1.13.4.4 In the event AT&T must dispatch to the End User's location more than once due to incorrect or incomplete information provided by Sprint (e.g., incomplete address, incorrect contact name/number, etc.), AT&T will bill Sprint for each additional dispatch required to repair the Network Element due to the incorrect/incomplete information provided. AT&T will assess the applicable Maintenance of Service rates from BellSouth's FCC No.1 Tariff, Section 13.3.1. The Parties disagree on the appropriate basis (i.e., TELRIC or Access Tariff) for rates in this Section 1.13.4.4 and reserve the right to pursue resolution of this issue through the appropriate forum.

2 Loops

2.1 General. The local loop Network Element is defined as a transmission facility that AT&T provides pursuant to this Attachment between a distribution frame (or its equivalent) in AT&T's central office and the loop demarcation point at an End User premises (Loop). Facilities that do not terminate at a demarcation point at an End User premises, including, by way of example, but not limited to, facilities that terminate to another carrier's switch or premises, a cell site, Mobile Switching Center or base station, do not constitute local Loops. The Loop Network Element includes all features, functions, and capabilities of the transmission facilities, including the network interface device, and attached electronics (except those used for the provision of advanced services, such as Digital Subscriber Line Access Multiplexers (DSLAMs)), optronics and intermediate devices (including repeaters and load coils) used to establish the transmission path to the End User's premises, including inside wire owned or controlled by AT&T. Sprint shall purchase the entire bandwidth of the Loop and, except as required herein or as otherwise agreed to by the Parties, AT&T shall not subdivide the frequency of the Loop.

2.1.1 The Loop does not include any packet switched features, functions or capabilities.

2.1.2 Fiber to the Home (FTTH) loops are local loops consisting entirely of fiber optic cable, whether dark or lit, serving an End User's premises or, in the case of predominantly residential multiple dwelling units (MDUs), a fiber optic cable, whether dark or lit, that extends to the MDU minimum point of entry (MPOE).

Fiber to the Curb (FTTC) loops are local loops consisting of fiber optic cable connecting to a copper distribution plant that is not more than five hundred (500) feet from the End User's premises or, in the case of predominantly residential MDUs, not more than five hundred (500) feet from the MDU's MPOE. The fiber optic cable in a FTTC loop must connect to a copper distribution plant at a serving area interface from which every other copper distribution subloop also is not more than five hundred (500) feet from the respective End User's premises. FTTH/FTTC loops do not include local loops to predominantly business MDUs.

2.1.2.1 In new build (Greenfield) areas, where AT&T has only deployed FTTH/FTTC facilities, AT&T is under no obligation to provide Loops. FTTH facilities include fiber loops deployed to the MPOE of a MDU that is predominantly residential regardless of the ownership of the inside wiring from the MPOE to each End User in the MDU.

2.1.2.2 In FTTH/FTTC overbuild situations where AT&T also has copper Loops, AT&T will make those copper Loops available to Sprint on an unbundled basis, until such time as AT&T chooses to retire those copper Loops using the FCC's network disclosure requirements contained in 47 C.F.R. Part 51. In these cases, AT&T will offer a 64 kilobits per second (kbps) second voice grade channel over its FTTH/FTTC facilities.

2.1.2.3 Furthermore, in FTTH/FTTC overbuild areas where AT&T has not yet retired copper facilities, AT&T is not obligated to ensure that such copper Loops in that area are capable of transmitting signals prior to receiving a request for access to such Loops by Sprint. If a request is received by AT&T for a copper Loop, and the copper facilities have not yet been retired, AT&T will restore the copper Loop to serviceable condition if technically feasible. In these instances of Loop orders in an FTTH/FTTC overbuild area, AT&T's standard Loop provisioning interval will not apply, and the order will be handled on a project basis by which the Parties will negotiate the applicable provisioning interval.

2.1.3 A hybrid Loop is a local Loop, composed of both fiber optic cable, usually in the feeder plant, and copper twisted wire or cable, usually in the distribution plant.

2.1.3.1 <u>Broadband Services</u>. AT&T shall provide Sprint with nondiscriminatory access to the time division multiplexing features, functions and capabilities of such hybrid Loop, on an unbundled basis to establish a complete transmission path between AT&T's central office and an End User's premises. This access shall include access to all features, functions, and capabilities of the hybrid loop that are not used to transmit packetized information.

2.1.3.2 <u>Narrowband services</u>. AT&T will provide nondiscriminatory access on an unbundled basis to an entire hybrid loop capable of voice grade service using time division multiplexing technology or access to a spare home-run copper loop.

2.1.4 <u>Transition for DS1 and DS3 Loops</u>

2.1.4.1 For purposes of this Section 2, the Transition Period for the Embedded Base of DS1 and DS3 Loops and for the Excess DS1 and DS3 Loops (defined in 2.1.4.3) is the twelve (12) month period beginning March 11, 2005 and ending March 10, 2006.

2.1.4.2 For purposes of this Section 2, Embedded Base means DS1 and DS3 Loops that were in service for Sprint as of March 10, 2005 in those wire centers that, as of such date, met the criteria set forth in Sections 2.1.4.5.1 or 2.1.4.5.2 below. Subsequent disconnects or loss of End Users shall be removed from the Embedded Base.

2.1.4.3 Excess DS1 and DS3 Loops are those Sprint DS1 and DS3 Loops in service as of March 10, 2005, in excess of the caps set forth in Sections 2.3.6.2 and 2.3.12 below, respectively. Subsequent disconnects or loss of End Users shall be removed from Excess DS1 and DS3 Loops.

2.1.4.4 For purposes of this Section 2, a Business Line is as defined in 47 C.F.R. § 51.5. Similarly, a Fiber- based Collocator is as defined in 47 C.F.R. §51.5.

2.1.4.5 Notwithstanding anything to the contrary in this Agreement, and except as set forth in Section 2.1.4.12 below, AT&T shall make available DS1 and DS3 Loops as described in this Section 2.1.4 only for (1) Sprint's Embedded Base and (2) Sprint's Excess DS1 and DS3 Loops during the Transition Period:

2.1.4.5.1 DS1 Loops at any location within the service area of a wire center containing 60,000 or more Business Lines and four (4) or more fiber-based collocators.

2.1.4.5.2 DS3 Loops at any location within the service area of a wire center containing 38,000 or more Business Lines and four (4) or more fiber-based collocators.

2.1.4.6 A list of wire centers meeting the criteria set forth in Sections 2.1.4.5.1 and 2.1.4.5.2 above as of March 10, 2005 (Initial Wire Center List), is available on AT&T's Interconnection Services Web site.

2.1.4.7 Notwithstanding the Effective Date of this Agreement, during the Transition Period, the rates for Sprint's Embedded Base of DS1 and DS3 Loops and Sprint's Excess DS1 and DS3 Loops described in this Section 2.1.4 shall be as set forth in Exhibit B.

2.1.4.8 The Transition Period shall apply only to (1) Sprint's Embedded Base and (2) Sprint's Excess DS1 and DS3 Loops. Sprint shall not add new DS1 or DS3 loops as described in this Section 2.1.4 pursuant to this Agreement, except pursuant to the self-certification process as set forth in Section 1.8 of this Attachment and as set forth in Section 2.1.4.12 below.

2.1.4.9 Once a wire center exceeds both of the thresholds set forth in Section 2.1.4.5.1, no DS1 Loop unbundling will be required in that wire center except as provided for in 2.1.4.5.

2.1.4.10 Once a wire center exceeds both of the thresholds set forth in Section 2.1.4.5.2, no DS3 Loop unbundling will be required in that wire center except as provided for in 2.1.4.5.

2.1.4.11 No later than December 9, 2005 Sprint shall submit spreadsheet(s) identifying all of the Embedded Base of circuits and Excess DS1 and DS3 Loops to be either disconnected or converted to other AT&T services pursuant to Section 1.6 above. The Parties shall negotiate a project schedule for the Conversion of the Embedded Base and Excess DS1 and DS3 Loops.

2.1.4.11.1 If Sprint fails to submit the spreadsheet(s) specified in Section 2.1.4.11 above for all of its Embedded Base and Excess DS1 and DS3 Loops prior to December 9, 2005, AT&T will identify Sprint's remaining Embedded Base and Excess DS1 and DS3 Loops, if any, and will transition such circuits to the equivalent tariffed AT&T service(s). Those circuits identified and transitioned by AT&T pursuant to this Section 2.1.4.11.1 shall be subject to all applicable disconnect charges as set forth in this Agreement and the full nonrecurring charges for installation of the equivalent tariffed AT&T service as set forth in AT&T's tariffs.

2.1.4.11.2 For Embedded Base circuits and Excess DS1 and DS3 Loops converted pursuant to Section 2.1.4.11 above or transitioned pursuant to Section 2.1.4.11.1 above, the applicable recurring tariff charge shall apply to each circuit as of the earlier of the date each circuit is converted or transitioned, as applicable, or March 11, 2006.

2.1.4.12 <u>Modifications and Updates to the Wire Center List and Subsequent Transition Periods</u>

2.1.4.12.1 In the event AT&T identifies additional wire centers that meet the criteria set forth in Section 2.1.4.5 above, but that were not included in the Initial Wire Center List, AT&T shall include such additional wire centers in a carrier notification letter (CNL). Each such list of additional wire centers shall be considered a “Subsequent Wire Center List”.

2.1.4.12.2 Effective thirty (30) days after the date of a AT&T CNL providing a Subsequent Wire Center List, AT&T shall not be required to unbundle DS1 and/or DS3 Loops, as applicable, in such additional wire center(s), except pursuant to the self-certification process as set forth in Section 1.8 of this Attachment.

2.1.4.12.3 For purposes of Section 2.1.4.12 above, AT&T shall make available DS1 and DS3 Loops that were in service for Sprint in a wire center on the Subsequent Wire Center List as of the thirtieth (30th) day after the date of AT&T’s CNL identifying the Subsequent Wire Center List (Subsequent Embedded Base) until one hundred

and fifty (150) days from the date of AT&T's CNL identifying the Subsequent Wire Center List (Subsequent Transition Period).

2.1.4.12.4 Subsequent disconnects or loss of End Users shall be removed from the Subsequent Embedded Base.

2.1.4.12.5 The rates set forth in Exhibit B shall apply to the Subsequent Embedded Base during the Subsequent Transition Period.

2.1.4.12.6 No later than sixty (60) days from AT&T's CNL identifying the Subsequent Wire Center List, Sprint shall submit a spreadsheet(s) identifying the Subsequent Embedded Base of circuits to be disconnected or converted to other AT&T services. The Parties shall negotiate a project schedule for the Conversion of the Subsequent Embedded Base.

2.1.4.12.6.1 If Sprint fails to submit the spreadsheet(s) specified in Section 2.1.4.12.6 above for all of its Subsequent Embedded Base within sixty (60) days after the date of AT&T's CNL identifying the Subsequent Wire Center List, AT&T will identify Sprint's remaining Subsequent Embedded Base, if any, and will transition such circuits to the equivalent tariffed AT&T service(s). Those circuits identified and transitioned by AT&T shall be subject to the applicable disconnect charges as set forth in this Agreement and the full nonrecurring charges for installation of the equivalent tariffed AT&T service as set forth in AT&T's tariffs.

2.1.4.13 For Subsequent Embedded Base circuits converted pursuant to Section 2.1.4.12.6 above or transitioned pursuant to Section 2.1.4.12.6.1 above, the applicable recurring tariff charges shall apply as of the earlier of the date each circuit is converted or transitioned, as applicable, or the first day after the end of the Subsequent Transition Period.

2.1.5 Where facilities are available, AT&T will install Loops in compliance with AT&T's Products and Services Interval Guide available at AT&T's Web site: http://www.interconnection.bellsouth.com. For orders of fifteen (15) or more Loops, the installation and any applicable OC as described below will be handled on a project basis, and the intervals will be set by the AT&T project manager for that order. When Loops require a Service Inquiry (SI) prior to issuing the order to determine if facilities are available, the interval for the SI process is separate from the installation interval.

2.1.6 The Loop shall be provided to Sprint in accordance with AT&T's TR73600 Unbundled Local Loop Technical Specification and applicable industry standard technical references.

2.1.7 AT&T will only provision, maintain and repair the Loops to the standards that are consistent with the type of Loop ordered.

2.1.8 When a AT&T technician is required to be dispatched to provision the Loop, AT&T will tag the Loop with the Circuit ID number and the name of the ordering CLEC. When a dispatch is not required to provision the Loop, AT&T will tag the Loop on the next required visit to the End User's location. If Sprint wants to ensure the Loop is tagged during the provisioning process for Loops that may not require a dispatch (e.g., UVL-SL1, UVL-SL2, and UCL-ND), Sprint may order Loop Tagging. Rates for Loop Tagging are as set forth in Exhibit A.

2.1.8.1 For voice grade Loop orders (or orders for Loops intended to provide voice grade services), Sprint shall have dial-tone available for that Loop forty-eight (48) hours prior to the Loop order completion due date.

2.1.9 Order Coordination (OC) and Order Coordination-Time Specific (OC-TS)

2.1.9.1 OC allows AT&T and Sprint to coordinate the installation of the SL2 Loops, Unbundled Digital Loops (UDL) and other Loops where OC may be purchased as an option, to Sprint's facilities to limit End User service outage. OC is available when the Loop is provisioned over an existing circuit that is currently providing service to the End User. OC for physical conversions will be scheduled at AT&T's discretion during normal working hours on the committed due date. OC shall be provided in accordance with the chart set forth below.

2.1.9.2 OC-TS allows Sprint to order a specific time for OC to take place. AT&T will make commercially reasonable efforts to accommodate Sprint's specific conversion time request. However, AT&T reserves the right to negotiate with Sprint a conversion time based on load and appointment control when necessary. This OC-TS is a chargeable option for all Loops except Unbundled Copper Loops (UCL) and is billed in addition to the OC charge. Sprint may specify a time between 9:00 a.m. and 4:00 p.m. (location time) Monday through Friday (excluding holidays). If Sprint specifies a time outside this window, or selects a time or quantity of Loops that requires AT&T technicians to work outside normal work hours, overtime charges will apply in addition to the OC and OC-TS charges. Overtime charges will be applied based on the amount of overtime worked and in accordance with the rates established in AT&T's Access Services Tariff, Section E13.2, for each state. The OC-TS charges for an order due on the same day at the same location will be applied on a per Local Service Request (LSR) basis.

2.1.10

	Order Coordination (OC)	**Order Coordination – Time Specific (OC-TS)**	**Test Points**	**DLR**	**Charge for Dispatch and Testing if No Trouble Found**
SL-1 **(Non-Designed)**	Chargeable Option	Chargeable Option	Not available	Chargeable Option – ordered as Engineering	Charged for Dispatch inside and outside Central Office

				Information Document	
UCL-ND **(Non-Designed)**	Chargeable Option	Not Available	Not Available	Chargeable Option – ordered as Engineering Information Document	Charged for Dispatch inside and outside Central Office
Unbundled Voice Loops - SL-2 (including 2- and 4-wire UVL) (Designed)	Included	Chargeable Option	Included	Included	Charged for Dispatch outside Central Office
Unbundled Digital Loop (Designed)	Included	Chargeable Option	Included (where appropriate)	Included	Charged for Dispatch outside Central Office
Unbundled Copper Loop (Designed)	Chargeable in accordance with Section 2	Not available	Included	Included	Charged for Dispatch outside Central Office
For UVL-SL1 and UCLs, Sprint must order and will be billed for both OC and OC-TS if requesting OC-TS.					

2.1.11 <u>CLEC to CLEC Conversions for Unbundled Loops</u>

2.1.11.1 The CLEC to CLEC conversion process for Loops may be used by Sprint when converting an existing Loop from another CLEC for the same End User. The Loop type being converted must be included in Sprint's Interconnection Agreement before requesting a conversion.

2.1.11.2 To utilize the CLEC to CLEC conversion process, the Loop being converted must be the same Loop type with no requested changes to the Loop, must serve the same End User location from the same serving wire center, and must not require an outside dispatch to provision.

2.1.11.3 The Loops converted to Sprint pursuant to the CLEC to CLEC conversion process shall be provisioned in the same manner and with the same functionality and options as described in this Agreement for the specific Loop type.

2.1.12 <u>Bulk Migration</u>

2.1.12.1 AT&T will make available to Sprint a Bulk Migration process pursuant to which Sprint may request to migrate port/loop combinations, provisioned pursuant to a separate agreement between the Parties, to Loops (UNE-L). The Bulk Migration process may be used if such loop/port combinations are (1) associated with two

(2) or more Existing Account Telephone Numbers (EATNs); and (2) located in the same Central Office. The terms and conditions for use of the Bulk Migration process are described in the AT&T CLEC Information Package, incorporated herein by reference as it may be amended from time to time. The CLEC Information Package is located at www.interconnection.bellsouth.com/guides/html/unes.html. The rates for the Bulk Migration process shall be the nonrecurring rates associated with the Loop type being requested on the Bulk Migration, as set forth in Exhibit A. Additionally, Operations Support Systems (OSS) charges will also apply. Loops connected to Integrated Digital Loop Carrier (IDLC) systems will be migrated pursuant to Section 2.6 below.

2.1.12.2 Should Sprint request migration for two (2) or more EATNs containing fifteen (15) or more circuits, Sprint must use the Bulk Migration process referenced in 2.1.11.1 above.

2.2 Unbundled Voice Loops (UVLs)

2.2.1 AT&T shall make available the following UVLs:

2.2.1.1 2-wire Analog Voice Grade Loop – SL1 (Non-Designed)
2.2.1.2 2-wire Analog Voice Grade Loop – SL2 (Designed)
2.2.1.3 4-wire Analog Voice Grade Loop (Designed)

2.2.2 UVL may be provisioned using any type of facility that will support voice grade services. This may include loaded copper, non-loaded copper, digital loop carrier systems, fiber/copper combination (hybrid loop) or a combination of any of these facilities. AT&T, in the normal course of maintaining, repairing, and configuring its network, may also change the facilities that are used to provide any given voice grade circuit. This change may occur at any time. In these situations, AT&T will only ensure that the newly provided facility will support voice grade services. AT&T will not guarantee that Sprint will be able to continue to provide any advanced services over the new facility. AT&T will offer UVL in two different service levels - Service Level One (SL1) and Service Level Two (SL2).

2.2.3 Unbundled Voice Loop - SL1 (UVL-SL1). Loops are 2-wire Loop start circuits, will be non-designed, and will not have remote access test points. OC will be offered as a chargeable option on SL1 Loops when reuse of existing facilities has been requested by Sprint, however, OC is always required on UCLs that involve the reuse of facilities that are currently providing service. Sprint may also order OC-TS when a specified conversion time is requested. OC-TS is a chargeable option for any coordinated order and is billed in addition to the OC charge. An Engineering Information (EI) document can be ordered as a chargeable option. The EI document provides Loop Make-Up information which is similar to the information normally provided in a Design Layout Record (DLR). Upon issuance of a non-coordinated order in the service order system, SL1 Loops will be

activated on the due date in the same manner and time frames that AT&T normally activates POTS-type Loops for its End Users.

2.2.4 For an additional charge AT&T will make available Loop Testing so that Sprint may request further testing on new UVL-SL1 Loops. Rates for Loop Testing are as set forth in Exhibit A.

2.2.5 Unbundled Voice Loop – SL2 (UVL-SL2). Loops may be 2-wire or 4-wire circuits, shall have remote access test points, and will be designed with a DLR provided to Sprint. SL2 circuits can be provisioned with loop start, ground start or reverse battery signaling. OC is provided as a standard feature on SL2 Loops. The OC feature will allow Sprint to coordinate the installation of the Loop with the disconnect of an existing customer's service and/or number portability service. In these cases, AT&T will perform the order conversion with standard order coordination at its discretion during normal work hours.

2.3 Unbundled Digital Loops

2.3.1 AT&T will offer UDLs. UDLs are service specific, will be designed, will be provisioned with test points (where appropriate), and will come standard with OC and a DLR. The various UDLs are intended to support a specific digital transmission scheme or service.

2.3.2 AT&T shall make available the following UDLs, subject to restrictions set forth herein:

2.3.2.1 2-wire Unbundled ISDN Digital Loop
2.3.2.2 2-wire Unbundled ADSL Compatible Loop
2.3.2.3 2-wire Unbundled HDSL Compatible Loop
2.3.2.4 4-wire Unbundled HDSL Compatible Loop
2.3.2.5 4-wire Unbundled DS1 Digital Loop
2.3.2.6 4-wire Unbundled Digital Loop/DS0 – 64 kbps, 56 kbps and below
2.3.2.7 DS3 Loop
2.3.2.8 STS-1 Loop

2.3.3 2-wire Unbundled ISDN Digital Loops. These will be provisioned according to industry standards for 2-Wire Basic Rate ISDN services and will come standard with a test point, OC, and a DLR. Sprint will be responsible for providing AT&T with a Service Profile Identifier (SPID) associated with a particular ISDN-capable Loop and End User. With the SPID, AT&T will be able to adequately test the circuit and ensure that it properly supports ISDN service.

2.3.4 2-wire ADSL-Compatible Loop. This is a designed Loop that is provisioned according to Revised Resistance Design (RRD) criteria and may be up to 18,000 feet long and may have up to 6,000 feet of bridged tap (inclusive of Loop length). The Loop is a 2-wire circuit and will come standard with a test point, OC, and a DLR.

2.3.5 2-wire or 4-wire HDSL-Compatible Loop. This is a designed Loop that meets Carrier Serving Area (CSA) specifications, may be up to 12,000 feet long and may have up to 2,500 feet of bridged tap (inclusive of Loop length). It may be a 2-wire or 4-wire circuit and will come standard with a test point, OC, and a DLR.

2.3.6 4-wire Unbundled DS1 Digital Loop.

2.3.6.1 This is a designed 4-wire Loop that is provisioned according to industry standards for DS1 or Primary Rate ISDN services and will come standard with a test point, OC, and a DLR. A DS1 Loop may be provisioned over a variety of loop transmission technologies including copper, HDSL-based technology or fiber optic transport systems. It will include a 4-wire DS1 Network Interface at the End User's location.

2.3.6.1.1 In all states except Florida and North Carolina, for purposes of this Agreement, including the transition of DS1 and DS3 Loops described in Section 2.1.4 above, DS1 Loops include 2-wire and 4-wire copper Loops capable of providing high-bit rate digital subscriber line (HDSL) services, such as 2-wire and 4-wire HDSL Compatible Loops. The Parties acknowledge that the issue of whether DS1 Loops include 2-wire and 4-wire HDSL Compatible Loops is an issue in the following generic change of law proceedings: AL Docket 29543, KY Docket 2004-00427, LA Docket U-28131/U-28356, MS Docket 2005-AD-139 and TN Docket 04-00381). The Parties have agreed to abide by the Commission's decision with respect to this issue in such docket and have agreed to amend this Section in each state, if necessary, to conform to that decision in that state. Such amendment shall be effective thirty days from the date of signature. In the interim, Sprint has agreed to utilize AT&T proposed language with respect to this issue solely for the purpose of implementing a TRRO compliant agreement until this issue has been resolved. AT&T agrees that it will not use Sprint's agreement to utilize AT&T's language in this Section with respect to this issue as an admission that Sprint has reached agreement with AT&T on proposed language for this issue.

2.3.6.1.2 In Florida, for the purposes of this Agreement, including the transition of DS1 and DS3 Loops described in Section 2.1.4 above, DS1 loops include provisioned HDSL loops and the associated electronics whether configured as HDSL-2-wire or HDSL-4-wire loops.

2.3.6.2 AT&T shall not provide more than ten (10) unbundled DS1 Loops to Sprint at any single building in which DS1 Loops are available as unbundled Loops.

2.3.7 4-wire Unbundled Digital/DS0 Loop. These are designed 4-wire Loops that may be configured as 64kbps, 56kbps, 19kbps, and other sub-rate speeds associated with digital data services and will come standard with a test point, OC, and a DLR.

2.3.8 DS3 Loop. DS3 Loop is a two-point digital transmission path which provides for simultaneous two-way transmission of serial, bipolar, return-to-zero isochronous

digital electrical signals at a transmission rate of 44.736 megabits per second (Mbps) that is dedicated to the use of the ordering CLEC. It may provide transport for twenty-eight (28) DS1 channels, each of which provides the digital equivalent of twenty-four (24) analog voice grade channels. The interface to unbundled dedicated DS3 transport is a metallic-based electrical interface.

2.3.9 STS-1 Loop. STS-1 Loop is a high-capacity digital transmission path with SONET VT1.5 mapping that is dedicated for the use of the ordering customer. It is a two-point digital transmission path which provides for simultaneous two-way transmission of serial bipolar return-to-zero synchronous digital electrical signals at a transmission rate of 51.84 Mbps. It may provide transport for twenty-eight (28) DS1 channels, each of which provides the digital equivalent of twenty-four (24) analog voice grade channels. The interface to unbundled dedicated STS-1 transport is a metallic-based electrical interface.

2.3.10 Both DS3 Loop and STS-1 Loop require a SI in order to ascertain availability.

2.3.11 DS3 services come with a test point and a DLR. Mileage is airline miles, rounded up and a minimum of one mile applies. AT&T's TR73501 LightGate®Service Interface and Performance Specifications, Issue D, June 1995 applies to DS3 services.

2.3.12 Sprint may obtain a maximum of a single Unbundled DS3 Loop to any single building in which DS3 Loops are available as Unbundled Loops.

2.4 Unbundled Copper Loops (UCL).

2.4.1 AT&T shall make available UCLs. The UCL is a copper twisted pair Loop that is unencumbered by any intervening equipment (e.g., filters, load coils, range extenders, digital loop carrier, or repeaters) and is not intended to support any particular telecommunications service. The UCL will be offered in two types – Designed and Non-Designed.

2.4.2 Unbundled Copper Loop – Designed (UCL-D)

2.4.2.1 The UCL-D will be provisioned as a dry copper twisted pair (2-wire or 4-wire) Loop that is unencumbered by any intervening equipment (e.g., filters, load coils, range extenders, digital loop carrier, or repeaters).

2.4.2.2 A UCL-D will be 18,000 feet or less in length and is provisioned according to Resistance Design parameters, may have up to 6,000 feet of bridged tap and will have up to 1300 Ohms of resistance.

2.4.2.3 The UCL-D is a designed circuit, is provisioned with a test point, and comes standard with a DLR. OC is a chargeable option for a UCL-D; however, OC is always required on UCLs where a reuse of existing facilities has been requested by Sprint.

2.4.2.4 These Loops are not intended to support any particular services and may be utilized by Sprint to provide a wide-range of telecommunications services as long as those services do not adversely affect AT&T's network. This facility will include a Network Interface Device (NID) at the End User's location for the purpose of connecting the Loop to the customer's inside wire.

2.4.3 Unbundled Copper Loop – Non-Designed (UCL-ND)

2.4.3.1 The UCL–ND is provisioned as a dedicated 2-wire metallic transmission facility from AT&T's Main Distribution Frame (MDF) to an End User's premises (including the NID). The UCL-ND will be a "dry copper" facility in that it will not have any intervening equipment such as load coils, repeaters, or digital access main lines (DAMLs), and may have up to 6,000 feet of bridged tap between the End User's premises and the serving wire center. The UCL-ND typically will be 1300 Ohms resistance and in most cases will not exceed 18,000 feet in length, although the UCL-ND will not have a specific length limitation. For Loops less than 18,000 feet and with less than 1300 Ohms resistance, the Loop will provide a voice grade transmission channel suitable for loop start signaling and the transport of analog voice grade signals. The UCL-ND will not be designed and will not be provisioned with either a DLR or a test point.

2.4.3.2 The UCL-ND facilities may be mechanically assigned using AT&T's assignment systems. Therefore, the Loop Makeup (LMU) process is not required to order and provision the UCL-ND. However, Sprint can request LMU for which additional charges would apply.

2.4.3.3 For an additional charge, AT&T also will make available Loop Testing so that Sprint may request further testing on the UCL-ND. Rates for Loop Testing are as set forth in Exhibit A.

2.4.3.4 UCL-ND Loops are not intended to support any particular service and may be utilized by Sprint to provide a wide-range of telecommunications services as long as those services do not adversely affect AT&T's network. The UCL-ND will include a NID at the customer's location for the purpose of connecting the Loop to the End User's inside wire.

2.4.3.5 OC will be provided as a chargeable option and may be utilized when the UCL-ND provisioning is associated with the reuse of AT&T facilities. OC-TS does not apply to this product.

2.4.3.6 Sprint may use AT&T's Unbundled Loop Modification (ULM) offering to remove excessive bridged taps and/or load coils from any copper Loop within the AT&T network. Therefore, some Loops that would not qualify as UCL-ND could be transformed into Loops that do qualify, using the ULM process.

2.5 Unbundled Loop Modifications (Line Conditioning)

2.5.1 Line Conditioning is defined as routine network modification that AT&T regularly undertakes to provide xDSL services to its own customers. This may include the removal of any device, from a copper Loop or copper Subloop that may diminish the capability of the Loop or Subloop to deliver high-speed switched wireline telecommunications capability, including xDSL service. Such devices include, load coils, excessive bridged taps, low pass filters, and range extenders. Excessive bridged taps are bridged taps that serves no network design purpose and that are beyond the limits set according to industry standards and/or the AT&T's TR73600 Unbundled Local Loop Technical Specification.

2.5.2 AT&T will remove load coils only on copper Loops and Subloops that are less than 18,000 feet in length.

2.5.3 For any copper loop being ordered by Sprint which has over six thousand (6,000) feet of combined bridged tap will be modified, upon request from Sprint, so that the loop will have a maximum of six thousand (6,000) feet of bridged tap. This modification will be performed at no additional charge to Sprint. Loop conditioning orders that require the removal of bridged tap that serves no network design purpose on a copper Loop that will result in a combined total of bridged tap between two thousand five hundred (2,500) and six thousand (6,000) feet will be performed at the rates set forth in Exhibit A.

2.5.4 Sprint may request removal of any unnecessary and non-excessive bridged tap (bridged tap between zero (0) and two thousand five hundred (2,500) feet which serves no network design purpose), at rates pursuant to AT&T's SC Process as mutually agreed to by the Parties.

2.5.5 Rates for ULM are as set forth in Exhibit A.

2.5.6 AT&T will not modify a Loop in such a way that it no longer meets the technical parameters of the original Loop type (e.g., voice grade, ADSL, etc.) being ordered.

2.5.7 If Sprint requests ULM on a reserved facility for a new Loop order, AT&T may perform a pair change and provision a different Loop facility in lieu of the reserved facility with ULM if feasible. The Loop provisioned will meet or exceed specifications of the requested Loop facility as modified. Sprint will not be charged for ULM if a different Loop is provisioned. For Loops that require a DLR or its equivalent, AT&T will provide LMU detail of the Loop provisioned.

2.5.8 Sprint shall request Loop make up information pursuant to this Attachment prior to submitting a service inquiry and/or a LSR for the Loop type that Sprint desires AT&T to condition.

2.5.9 When requesting ULM for a Loop that AT&T has previously provisioned for Sprint, Sprint will submit a SI to AT&T. If a spare Loop facility that meets the

Loop modification specifications requested by Sprint is available at the location for which the ULM was requested, Sprint will have the option to change the Loop facility to the qualifying spare facility rather than to provide ULM. In the event that AT&T changes the Loop facility in lieu of providing ULM, Sprint will not be charged for ULM but will only be charged the service order charges for submitting an order.

2.6 Loop Provisioning Involving IDLC

2.6.1 Where Sprint has requested an Unbundled Loop and AT&T uses IDLC systems to provide the local service to the End User and AT&T has a suitable alternate facility available, AT&T will make such alternative facilities available to Sprint. If a suitable alternative facility is not available, then to the extent it is technically feasible, AT&T will implement one of the following alternative arrangements for Sprint (e.g., hairpinning):

1. Roll the circuit(s) from the IDLC to any spare copper that exists to the customer premises.
2. Roll the circuit(s) from the IDLC to an existing DLC that is not integrated.
3. If capacity exists, provide "side-door" porting through the switch.
4. If capacity exists, provide "Digital Access Cross-Connect System (DACS)-door" porting (if the IDLC routes through a DACS prior to integration into the switch).

2.6.2 Arrangements 3 and 4 above require the use of a designed circuit. Therefore, non-designed Loops such as the SL1 voice grade and UCL-ND may not be ordered in these cases.

2.6.3 If no alternate facility is available, and upon request from Sprint, and if agreed to by both Parties, AT&T may utilize its SC process to determine the additional costs required to provision facilities. Sprint will then have the option of paying the one-time SC rates to place the Loop.

2.7 Network Interface Device

2.7.1 The NID is defined as any means of interconnection of the End User's customer premises wiring to AT&T's distribution plant, such as a cross-connect device used for that purpose. The NID is a single line termination device or that portion of a multiple line termination device required to terminate a single line or circuit at the premises. The NID features two independent chambers or divisions that separate the service provider's network from the End User's premises wiring. Each chamber or division contains the appropriate connection points or posts to which the service provider and the End User each make their connections. The NID provides a protective ground connection and is capable of terminating cables such as twisted pair cable.

2.7.2 AT&T shall permit Sprint to connect Sprint's Loop facilities to the End User's customer premises wiring through the AT&T NID or at any other technically feasible point.

2.7.3 Access to NID

2.7.3.1 Sprint may access the End User's premises wiring by any of the following means and Sprint shall not disturb the existing form of electrical protection and shall maintain the physical integrity of the NID:

2.7.3.1.1 AT&T shall allow Sprint to connect its Loops directly to AT&T's multi-line residential NID enclosures that have additional space and are not used by AT&T or any other telecommunications carriers to provide service to the premises;

2.7.3.1.2 Where an adequate length of the End User's customer premises wiring is present and environmental conditions permit, either Party may remove the End User premises wiring from the other Party's NID and connect such wiring to that Party's own NID;

2.7.3.1.3 Either Party may enter the subscriber access chamber or dual chamber NID enclosures for the purpose of extending a cross-connect or spliced jumper wire from the customer premises wiring through a suitable "punch-out" hole of such NID enclosures; or

2.7.3.1.4 Sprint may request AT&T to make other rearrangements to the End User premises wiring terminations or terminal enclosure on a time and materials cost basis.

2.7.3.2 In no case shall either Party remove or disconnect the other Party's loop facilities from either Party's NIDs, enclosures, or protectors unless the applicable Commission has expressly permitted the same and the disconnecting Party provides prior notice to the other Party. In such cases, it shall be the responsibility of the Party disconnecting loop facilities to leave undisturbed the existing form of electrical protection and to maintain the physical integrity of the NID. It will be Sprint's responsibility to ensure there is no safety hazard, and Sprint will hold AT&T harmless for any liability associated with the removal of the AT&T Loop from the AT&T NID. Furthermore, it shall be the responsibility of the disconnecting Party, once the other Party's loop has been disconnected from the NID, to reconnect the disconnected loop to a nationally recognized testing laboratory listed station protector, which has been grounded as per Article 800 of the National Electrical Code. If no spare station protector exists in the NID, the disconnected loop must be appropriately cleared, capped and stored.

2.7.3.3 Sprint shall not remove or disconnect ground wires from AT&T's NIDs, enclosures, or protectors.

2.7.3.4 Sprint shall not remove or disconnect NID modules, protectors, or terminals from AT&T's NID enclosures.

2.7.3.5 Due to the wide variety of NID enclosures and outside plant environments, AT&T will work with Sprint to develop specific procedures to establish the most effective means of implementing this section if the procedures set forth herein do not apply to the NID in question.

2.7.4 Technical Requirements

2.7.4.1 The NID shall provide an accessible point of interconnection and shall maintain a connection to ground.

2.7.4.2 If an existing NID is accessed, it shall be capable of transferring electrical analog or digital signals between the End User's customer premises and the distribution media and/or cross-connect to Sprint's NID.

2.7.4.3 Existing AT&T NIDs will be operational and provided in "as is" condition. Sprint may request AT&T to do additional work to the NID on a time and material basis. When Sprint deploys its own local loops in a multiple-line termination device, Sprint shall specify the quantity of NID connections that it requires within such device.

2.8 Subloop Elements.

2.8.1 Copper subloops. AT&T shall provide Sprint with nondiscriminatory access to a copper subloop on an unbundled basis. A copper subloop is a portion of a copper loop, or hybrid loop, comprised entirely of copper wire or copper cable that acts as a transmission facility between any point of technically feasible access in AT&T's outside plant, including inside wire owned or controlled by AT&T, and the End User premises. A copper subloop includes all intermediate devices (including repeaters and load coils) used to establish a transmission path between a point of technically feasible access and the demarcation point at the End User premises, and includes the features, functions, and capabilities of the copper loop. Copper subloops include two-wire and four-wire analog voice-grade subloops as well as two-wire and four-wire subloops conditioned to transmit the digital signals needed to provide digital subscriber line services, regardless of whether the subloops are in service or held as spares.

2.8.1.1 Point of technically feasible access. A point of technically feasible access is any point in AT&T's outside plant where a technician can access the copper wire within a cable without removing a splice case. Such points include, but are not limited to, a pole or pedestal, the serving area interface, the NID, the minimum point of entry, any remote terminal, and the feeder/distribution interface. AT&T, upon a site-specific request, provide access to a copper subloop at a splice near a remote terminal. AT&T shall be compensated for providing this access in accordance with 47 C.F.R. §§ 51.501 through 51.515.

2.8.1.2 Rules for collocation. Access to the copper subloop is subject to the FCC's collocation rules at 47 C.F.R. §§ 51.321 and 51.323.

2.8.2 Subloops for access to multiunit premises wiring. AT&T shall provide Sprint with nondiscriminatory access to the subloop for access to multiunit premises wiring on an unbundled basis regardless of the capacity level or type of loop that Sprint seeks to provision for its End User. The subloop for access to multiunit premises wiring is defined as any portion of the loop that it is technically feasible to access at a terminal in AT&T's outside plant at or near a multiunit premises. One category of this subloop is inside wire, which is defined for purposes of this section as all loop plant owned or controlled by AT&T at a multiunit End User premises between the minimum point of entry as defined in 47 C.F.R. § 68.105 and the point of demarcation of AT&T's network as defined in 47 C.F.R. § 68.3 (i)

2.8.2.1 Point of technically feasible access. A point of technically feasible access is any point in AT&T's outside plant at or near a multiunit premises where a technician can access the wire or fiber within the cable without removing a splice case to reach the wire or fiber within to access the wiring in the multiunit premises. Such points include, but are not limited to, a pole or pedestal, the NID, the minimum point of entry, the single point of interconnection, and the feeder/distribution interface.

2.8.2.2 Single point of interconnection. Upon notification by Sprint that it requests interconnection at a multiunit premises AT&T owns, controls, or leases wiring, AT&T shall provide a single point of interconnection that is suitable for use by multiple carriers. This obligation is in addition to AT&T's obligations to provide nondiscriminatory access to a subloop for access to multiunit premises wiring, including any inside wire, at any technically feasible point.

2.8.3 To meet the obligations of the FCC rules and where facilities permit, AT&T shall offer access to its Unbundled Subloop (USL) elements as specified herein.

2.8.4 Unbundled Subloop Distribution (USLD)

2.8.4.1 The USLD facility is a dedicated transmission facility that AT&T provides from an End User's point of demarcation to a AT&T cross-connect device. The AT&T cross-connect device may be located within a remote terminal (RT) or a stand-alone cross-box in the field or in the equipment room of a building. The USLD media is a copper twisted pair that can be provisioned as a 2-wire or 4-wire facility. AT&T defines its subloop elements as follows and will make available these offerings where facilities exist:

USLD – Voice Grade (USLD-VG)
Unbundled Copper Subloop (UCSL)
USLD – Intrabuilding Network Cable (USLD-INC (aka riser cable))
Unbundled Network Terminating Wire (UNTW)

2.8.4.2 USLD-VG is a copper subloop facility from the cross-box in the field up to and including the point of demarcation at the End User's premises and may have load coils.

2.8.4.3 UCSL is a copper facility eighteen thousand (18,000) feet or less in length provided from the cross-box in the field up to and including the End User's point of demarcation. If available, this facility will not have any intervening equipment such as load coils between the End User and the cross-box.

2.8.4.3.1 If Sprint requests a UCSL and it is not available, Sprint may request the copper Subloop facility be modified pursuant to the ULM process to remove load coils and/or excessive bridged taps. If load coils and/or excessive bridged taps are removed, the facility will be classified as a UCSL.

2.8.4.4 USLD-INC is the distribution facility owned or controlled by AT&T inside a building or between buildings on the same property that is not separated by a public street or road. USLD-INC includes the facility from the cross-connect device in the building equipment room up to and including the point of demarcation at the End User's premises.

2.8.4.4.1 Upon request for USLD-INC from Sprint, AT&T will install a cross-connect panel in the building equipment room for the purpose of accessing USLD-INC pairs from a building equipment room. The cross-connect panel will function as a single point of interconnection (SPOI) for USLD-INC and will be accessible by multiple carriers as space permits. AT&T will place cross-connect blocks in twenty five (25) pair increments for Sprint's use on this cross-connect panel. Sprint will be responsible for connecting its facilities to the twenty five (25) pair cross-connect block(s).

2.8.4.5 <u>USLD Requirements</u>

2.8.4.5.1 For access to Voice Grade USLD and UCSL, Sprint shall install a cable to the AT&T cross-box pursuant to the terms and conditions for physical collocation for remote sites set forth in Attachment 4. This cable would be connected by a AT&T technician within the AT&T cross-box during the set-up process. Sprint's cable pairs can then be connected to AT&T's USL within the AT&T cross-box by the AT&T technician.

2.8.4.5.2 Through the SI process, AT&T will determine whether access to USLs at the location requested by Sprint is technically feasible and whether sufficient capacity exists in the cross-box. If existing capacity is sufficient to meet Sprint's request, then AT&T will perform the site set-up as described in the CLEC Information Package, located at AT&T's Interconnection Web site address: http://www.interconnection.bellsouth.com/products/html/unes.html.

2.8.4.5.3 The site set-up must be completed before Sprint can order Subloop pairs. For the site set-up in a AT&T cross-connect box in the field, AT&T will perform the

necessary work to splice Sprint's cable into the cross-connect box. For the site set-up inside a building equipment room, AT&T will perform the necessary work to install the cross-connect panel and the connecting block(s) that will be used to provide access to the requested USLs.

2.8.4.5.4 Once the site set-up is complete, Sprint will request Subloop pairs through submission of a LSR form to the Local Carrier Service Center (LCSC). OC is required with USL pair provisioning when Sprint requests reuse of an existing facility, and the OC charge shall be billed in addition to the USL pair rate. For expedite requests by Sprint for Subloop pairs, expedite charges will apply for intervals less than five (5) days.

2.8.4.6 USLs will be provided in accordance with AT&T's TR73600 Unbundled Local Loop Technical Specifications.

2.8.5 Unbundled Network Terminating Wire (UNTW)

2.8.5.1 UNTW is unshielded twisted copper wiring that is used to extend circuits from an intra-building network cable terminal or from a building entrance terminal to an individual End User's point of demarcation. It is the final portion of the Loop that in multi-subscriber configurations represents the point at which the network branches out to serve individual subscribers.

2.8.5.2 AT&T will provide this element in Multi-Dwelling Units (MDUs) and/or Multi-Tenants Units (MTUs) where AT&T owns wiring all the way to the End User's premises. AT&T will not provide this element in locations where the property owner provides its own wiring to the End User's premises, or where a third party owns the wiring to the End User's premises.

2.8.5.3 In those states where the Commission has required a CLEC to do so, Sprint will provide UNTW in MDUs and/or MTUs where Sprint owns wiring all the way to the End User's premises. Sprint will not provide this element in locations where the property owner provides its own wiring to the End User's premises, or where a third party owns the wiring to the End User's premises.

2.8.5.4 UNTW Requirements

2.8.5.4.1 On a multi-unit premises, upon request of the other Party (Requesting Party), the Party owning the network terminating wire (Provisioning Party) will provide access to UNTW pairs on an Access Terminal that is suitable for use by multiple carriers at each Garden Terminal or Wiring Closet.

2.8.5.4.2 The Provisioning Party shall not be required to install new or additional NTW beyond existing NTW to provision the services of the Requesting Party.

2.8.5.4.3 Except as set forth in Section 2.8.5.3 above where the obligation to provide access exists under this Agreement, in existing MDUs and/or MTUs in which AT&T does not own or control wiring (INC/NTW) to the End User's premises, Sprint, upon

request by AT&T, will, in good faith, negotiate rates, terms and conditions for such access in accordance with the applicable rules and requirements established by the FCC or the Commission. In situations in which AT&T activates a UNTW pair, AT&T will compensate Sprint for each pair activated commensurate to the price specified in Sprint's Agreement.

2.8.5.4.4 Upon receipt of the UNTW SI requesting access to the Provisioning Party's UNTW pairs at a multi-unit premises, representatives of both Parties will participate in a meeting at the site of the requested access. The purpose of the site visit will include discussion of the procedures for installation and location of the Access Terminals. By request of the Requesting Party, an Access Terminal will be installed either adjacent to each of the Provisioning Party's Garden Terminal or inside each Wiring Closet. The Requesting Party will deliver and connect its central office facilities to the UNTW pairs within the Access Terminal. The Requesting Party may access any available pair on an Access Terminal. A pair is available when a pair is not being utilized to provide service or where the End User has requested a change in its local service provider to the Requesting Party. Prior to connecting the Requesting Party's service on a pair previously used by the Provisioning Party, the Requesting Party is responsible for ensuring the End User is no longer using the Provisioning Party's service or another CLEC's service before accessing UNTW pairs.

2.8.5.4.5 Access Terminal installation intervals will be established on an individual case basis.

2.8.5.4.6 The Requesting Party is responsible for obtaining the property owner's permission for the Provisioning Party to install an Access Terminal(s) on behalf of the Requesting Party. The submission of the SI by the Requesting Party will serve as certification by the Requesting Party that such permission has been obtained. If the property owner objects to Access Terminal installations that are in progress or within thirty (30) days after completion and demands removal of Access Terminals, the Requesting Party will be responsible for costs associated with removing Access Terminals and restoring the property to its original state prior to Access Terminals being installed.

2.8.5.4.7 The Requesting Party shall indemnify and hold harmless the Provisioning Party against any claims of any kind that may arise out of the Requesting Party's failure to obtain the property owner's permission. The Requesting Party will be billed for nonrecurring and recurring charges for accessing UNTW pairs at the time the Requesting Party activates the pair(s). The Requesting Party will notify the Provisioning Party within five (5) business days of activating UNTW pairs using the LSR form.

2.8.5.4.8 If a trouble exists on a UNTW pair, the Requesting Party may use an alternate spare pair that serves that End User if a spare pair is available. In such cases, the Requesting Party will re-terminate its existing jumper from the defective pair to the

spare pair. Alternatively, the Requesting Party will isolate and report troubles in the manner specified by the Provisioning Party. The Requesting Party must tag the UNTW pair that requires repair. If the Provisioning Party dispatches a technician on a reported trouble call and no UNTW trouble is found, the Provisioning Party will charge Requesting Party for time spent on the dispatch and testing the UNTW pair(s).

2.8.5.4.9 If the Requesting Party initiates the Access Terminal installation and the Requesting Party has not activated at least ten percent (10%) of the capacity of the Access Terminal installed pursuant to the Requesting Party's request for an Access Terminal within six (6) months of installation of the Access Terminal, the Provisioning Party will bill the Requesting Party a nonrecurring charge (NRC) equal to the actual cost of provisioning the Access Terminal.

2.8.5.4.10 If the Provisioning Party determines that the Requesting Party is using the UNTW pairs without reporting the activation of the pairs, the Requesting Party will be billed for the use of that pair back to the date the End User began receiving service from the Requesting Party at that location. Upon request, the Requesting Party will provide copies of its billing record to substantiate such date. If the Requesting Party fails to provide such records, then the Provisioning Party will bill the Requesting Party back to the date of the Access Terminal installation.

2.8.6 <u>Dark Fiber Loop.</u>

2.8.6.1 Dark Fiber Loop is an unused optical transmission facility, without attached signal regeneration, multiplexing, aggregation or other electronics, from the demarcation point at an End User's premises to the End User's serving wire center. Dark Fiber Loops may be strands of optical fiber existing in aerial or underground structure. AT&T will not provide line terminating elements, regeneration or other electronics necessary for Sprint to utilize Dark Fiber Loops.

2.8.6.2 <u>Transition for Dark Fiber Loop</u>

2.8.6.2.1 For purposes of this Section 2.8.6, the Transition Period for Dark Fiber Loops is the eighteen (18) month period beginning March 11, 2005 and ending September 10, 2006.

2.8.6.2.2 For purposes of this Section 2.8.6, Embedded Base means Dark Fiber Loops that were in service for Sprint as of March 10, 2005. Subsequent disconnects or loss of End Users shall be removed from the Embedded Base.

2.8.6.3 During the Transition Period only, AT&T shall make available the Embedded Base Dark Fiber Loops for Sprint at the terms and conditions set forth in this Attachment.

2.8.6.4 Notwithstanding the Effective Date of this Agreement, the rates for Sprint's Embedded Base of Dark Fiber Loops during the Transition Period shall be as set forth in Exhibit A.

2.8.6.5 The Transition Period shall apply only to Sprint's Embedded Base and Sprint shall not add new Dark Fiber Loops pursuant to this Agreement.

2.8.6.6 Effective September 11, 2006, Dark Fiber Loops will no longer be made available pursuant to this Agreement**.**

2.8.6.7 No later than June 10, 2006 Sprint shall submit spreadsheet(s) identifying all of the Embedded Base of circuits to be either disconnected or converted to other AT&T services as Conversions pursuant to Section 1.6. The Parties shall negotiate a project schedule for the Conversion of the Embedded Base.

2.8.6.7.1 If Sprint fails to submit the spreadsheet(s) specified in Section 2.8.6.7 above for all of its Embedded Base prior to June 10, 2006, AT&T will identify Sprint's remaining Embedded Base, if any, and will transition such circuits to the equivalent tariffed AT&T service(s). Those circuits identified and transitioned by AT&T pursuant to this Section 2.8.6.7.1 shall be subject to all applicable disconnect charges as set forth in this Agreement and the full nonrecurring charges for installation of the equivalent tariffed AT&T service as set forth in AT&T's tariffs.

2.8.6.7.2 For Embedded Base circuits converted pursuant to Section 2.8.6.7 or transitioned pursuant to 2.8.6.7.1, the applicable recurring tariff charge shall apply to each circuit as of the earlier of the date each circuit is converted or transitioned, as applicable, or September 11, 2006.

2.9 Loop Makeup

2.9.1 Description of Service

2.9.1.1 AT&T shall make available to Sprint LMU information with respect to Loops that are required to be unbundled under this Agreement so that Sprint can make an independent judgment about whether the Loop is capable of supporting the advanced services equipment Sprint intends to install and the services Sprint wishes to provide. LMU is a preordering transaction, distinct from Sprint ordering any other service(s). Loop Makeup Service Inquiries (LMUSI) and mechanized LMU queries for preordering LMU are likewise unique from other preordering functions with associated SIs as described in this Agreement.

2.9.1.2 AT&T will provide Sprint LMU information consisting of the composition of the Loop material (copper/fiber); the existence, location and type of equipment on the Loop, including but not limited to digital loop carrier or other remote concentration devices, feeder/distribution interfaces, bridged taps, load coils, pair-gain devices; the Loop length; the wire gauge and electrical parameters.

2.9.1.3 AT&T's LMU information is provided to Sprint as it exists either in AT&T's databases or in its hard copy facility records. AT&T does not guarantee accuracy or reliability of the LMU information provided.

2.9.1.4 AT&T's provisioning of LMU information to the requesting CLEC for facilities is contingent upon either AT&T or the requesting CLEC controlling the Loop(s) that serve the service location for which LMU information has been requested by the CLEC. The requesting CLEC is not authorized to receive LMU information on a facility used or controlled by another CLEC unless AT&T receives a LOA from the voice CLEC (owner) or its authorized agent on the LMUSI submitted by the requesting CLEC.

2.9.1.5 Sprint may choose to use equipment that it deems will enable it to provide a certain type and level of service over a particular AT&T Loop as long as that equipment does not disrupt other services on the AT&T network. The determination shall be made solely by Sprint and AT&T shall not be liable in any way for the performance of the advanced data services provisioned over said Loop. The specific Loop type (e.g., ADSL, HDSL, or otherwise) ordered on the LSR must match the LMU of the Loop reserved taking into consideration any requisite line conditioning. The LMU data is provided for informational purposes only and does not guarantee Sprint's ability to provide advanced data services over the ordered Loop type. Furthermore, the LMU information for Loops other than copper-only Loops (e.g., ADSL, UCL-ND, etc.) that support xDSL services, is subject to change at any time due to modifications and/or upgrades to AT&T's network. Except as set forth in Section 2.9.1.6, copper-only Loops will not be subject to change due to modification and/or upgrades to AT&T's network and will remain on copper facilities until the Loop is disconnected by Sprint or the End User, or until AT&T retires the copper facilities via the FCC's and any applicable Commission's requirements. Sprint is fully responsible for any of its service configurations that may differ from AT&T's technical standard for the Loop type ordered.

2.9.1.6 If AT&T retires its copper facilities using 47 C.F.R § 52.325(a) requirements; or is required by a governmental agency or regulatory body to move or replace copper facilities as a maintenance procedure, AT&T will notify Sprint, according to the applicable network disclosure requirements. It will be Sprint's responsibility to move any service it may provide over such facilities to alternative facilities. If Sprint fails to move the service to alternative facilities by the date in the network disclosure notice, AT&T may terminate the service to complete the network change.

2.9.2 <u>Submitting LMUSI</u>

2.9.2.1 Sprint may obtain LMU information and reserve facilities by submitting a mechanized LMU query or a manual LMUSI according to the terms and conditions as described in the LMU CLEC Information Package, incorporated herein by reference as it may be amended from time to time. The CLEC Information Package is located at the "CLEC UNE Product" Web site address: www.interconnection.bellsouth.com/guides/html/unes.html. After obtaining the Loop information from the mechanized LMU process, if Sprint needs further Loop

information in order to determine Loop service capability, Sprint may initiate a separate Manual SI for a separate NRC as set forth in Exhibit A.

2.9.2.2 All LSRs issued for reserved facilities shall reference the facility reservation number as provided by AT&T. Sprint will not be billed any additional LMU charges for the Loop ordered on such LSR. If, however, Sprint does not reserve facilities upon an initial LMUSI, Sprint's placement of an order for an advanced data service type facility will incur the appropriate billing charges to include SI and reservation per Exhibit A.

2.9.2.3 Where Sprint has reserved multiple Loop facilities on a single reservation, Sprint may not specify which facility shall be provisioned when submitting the LSR. For those occasions, AT&T will assign to Sprint, subject to availability, a facility that meets the AT&T technical standards of the AT&T type Loop as ordered by Sprint.

2.9.2.4 Charges for preordering manual LMUSI or mechanized LMU are separate from any charges associated with ordering other services from AT&T.

3 Line Splitting

3.1 Line splitting shall mean that a provider of data services (a Data LEC) and a provider of voice services (a Voice CLEC) to deliver voice and data service to End Users over the same Loop. The Voice CLEC and Data LEC may be the same or different carriers.

3.2 Line Splitting – UNE-L. In the event Sprint provides its own switching or obtains switching from a third party, Sprint may engage in line splitting arrangements with another CLEC using a splitter, provided by Sprint, in a Collocation Space at the central office where the loop terminates into a distribution frame or its equivalent.

3.3 Provisioning Line Splitting and Splitter Space – UNE-L

3.3.1 The Voice CLEC provides the splitter when providing Line Splitting with UNE-L. When Sprint owns the splitter, Line Splitting requires the following: a Loop from NID at the End User's location to the serving wire center and terminating into a distribution frame or its equivalent.

3.3.2 An unloaded 2-wire copper Loop must serve the End User. The meet point for the Voice CLEC and the Data LEC is the point of termination on the MDF for the Data LEC's cable and pairs.

3.4 CLEC Provided Splitter – Line Splitting –UNE-L

3.4.1 To order High Frequency Spectrum on a particular Loop, Sprint must have a DSLAM collocated in the central office that serves the End User of such Loop.

3.4.2 Sprint may purchase, install and maintain central office POTS splitters in its collocation arrangements. Sprint may use such splitters for access to its customers

and to provide digital line subscriber services to its customers using the High Frequency Spectrum. Existing Collocation rules and procedures and the terms and conditions relating to Collocation set forth in Attachment 4-Central Office shall apply.

3.4.3 Any splitters installed by Sprint in its collocation arrangement shall comply with ANSI T1.413, Annex E, or any future ANSI splitter Standards. Sprint may install any splitters that AT&T deploys or permits to be deployed for itself or any AT&T affiliate.

3.5 Maintenance – Line Splitting –UNE-L

3.5.1 AT&T will be responsible for repairing voice troubles and the troubles with the physical loop between the NID at the End User's premises and the termination point.

3.5.2 Sprint shall indemnify, defend and hold harmless AT&T from and against any claims, losses, actions, causes of action, suits, demands, damages, injury, and costs including reasonable attorney fees, which arise out of actions related to the other service provider, except to the extent caused by AT&T's gross negligence or willful misconduct.

4 Local Switching

4.1 Local Switching is not offered pursuant to this Agreement.

4.2 Transition for Local Switching

4.2.1 For purposes of this Section 4, the Transition Period for the Embedded Base of Local Switching is the twelve (12) month period beginning March 11, 2005 and ending March 10, 2006.

4.2.2 For the purposes of this Section 4, Embedded Base shall mean Local Switching and any additional elements that are required to be provided in conjunction therewith that were in service for Sprint as of March 10, 2005.

4.2.3 Transition Period Pricing. From March 11, 2005, through the completion of the Transition Period, AT&T shall charge a rate for Sprint's Embedded Base of Local Switching equal to the higher of:

4.2.3.1 The rate at which Sprint leased that combination of elements on June 15, 2004, plus one dollar ($1); or

4.2.3.2 The rate the Commission established, if any, between June 16, 2004, and the effective date of the TRRO, plus one dollar ($1).

4.2.3.3 These rates shall be as set forth in Exhibit A and this Section 4.

5 Unbundled Network Element Combinations

5.1 For purposes of this Section, references to "Currently Combined" Network Elements shall mean that the particular Network Elements requested by Sprint are in fact already combined by AT&T in the AT&T network. References to "Ordinarily Combined" Network Elements shall mean that the particular Network Elements requested by Sprint are not already combined by AT&T in the location requested by Sprint but are elements that are typically combined in AT&T's network. References to "Not Typically Combined" Network Elements shall mean that the particular Network Elements requested by Sprint are not elements that AT&T combines for its use in its network.

5.1.1 Except as otherwise set forth in this Agreement, upon request, AT&T shall perform the functions necessary to combine Network Elements that AT&T is required to provide under this Agreement in any manner, even if those elements are not ordinarily combined in AT&T's network, provided that such Combination is technically feasible and will not undermine the ability of other carriers to obtain access to Network Elements or to interconnect with AT&T's network.

5.1.2 To the extent Sprint requests a Combination for which AT&T does not have methods and procedures in place to provide such Combination, rates and/or methods or procedures for such Combination will be developed pursuant to the BFR process.

5.2 Rates

5.2.1 The rates for the Currently Combined Network Elements specifically set forth in Exhibit A shall be the rates associated with such Combinations. Where a Currently Combined Combination is not specifically set forth in Exhibit A, the rate for such Currently Combined Combination shall be the sum of the recurring rates for those individual Network Elements as set forth in Exhibit A and/or Exhibit B in addition to the applicable nonrecurring switch-as-is charge set forth in Exhibit A.

5.2.2 The rates for the Ordinarily Combined Network Elements specifically set forth in Exhibit A shall be the nonrecurring and recurring charges for those Combinations. Where an Ordinarily Combined Combination is not specifically set forth in Exhibit A, the rate for such Ordinarily Combined Combination shall be the sum of the recurring rates for those individual Network Elements as set forth in Exhibit A and/or Exhibit B and nonrecurring rates for those individual Network Elements as set forth in Exhibit A.

5.2.3 The rates for Not Typically Combined Combinations shall be developed pursuant to the BFR process upon request of Sprint.

5.3 Enhanced Extended Links (EELs)

5.3.1 EELs are combinations of Loops and Dedicated Transport as defined in this Attachment, together with any facilities, equipment, or functions necessary to combine those Network Elements. AT&T shall provide Sprint with EELs where

the underlying Network Element are available and are required to be provided pursuant to this Agreement and in all instances where the requesting carrier meets the eligibility requirements, if applicable.

5.3.2 High-capacity EELs are (1) combinations of Loop and Dedicated Transport, (2) Dedicated Transport commingled with a wholesale loop, or (3) a Loop commingled with wholesale transport at the DS1 and/or DS3 level as described in 47 C.F.R. § 51.318(b).

5.3.3 By placing an order for a high-capacity EEL, Sprint thereby certifies that the service eligibility criteria set forth herein are met for access to a converted high-capacity EEL, a new high-capacity EEL, or part of a high-capacity commingled EEL as a UNE. AT&T shall have the right to audit Sprint's high-capacity EELs as specified below.

5.3.4 Service Eligibility Criteria

5.3.4.1 High capacity EELs must comply with the following service eligibility requirements. Sprint must certify for each high-capacity EEL that all of the following service eligibility criteria are met:

5.3.4.1.1 Sprint has received state certification to provide local voice service in the area being served;

5.3.4.2 For each combined circuit, including each DS1 circuit, each DS1 EEL, and each DS1-equivalent circuit on a DS3 EEL:

5.3.4.2.1 Each circuit to be provided to each End User will be assigned a local number prior to the provision of service over that circuit;

5.3.4.2.2 Each DS1-equivalent circuit on a DS3 EEL must have its own local number assignment so that each DS3 must have at least twenty-eight (28) local voice numbers assigned to it;

5.3.4.2.3 Each circuit to be provided to each End User will have 911 or E911 capability prior to provision of service over that circuit;

5.3.4.2.4 Each circuit to be provided to each End User will terminate in a collocation arrangement that meets the requirements of 47 C.F.R. § 51.318(c);

5.3.4.2.5 Each circuit to be provided to each End User will be served by an interconnection trunk over which Sprint will transmit the calling party's number in connection with calls exchanged over the trunk;

5.3.4.2.6 For each twenty-four (24) DS1 EELs or other facilities having equivalent capacity, Sprint will have at least one (1) active DS1 local service interconnection trunk over which Sprint will transmit the calling party's number in connection with calls exchanged over the trunk; and

5.3.4.2.7 Each circuit to be provided to each End User will be served by a switch capable of switching local voice traffic.

5.3.4.3 AT&T may, on an annual basis, audit Sprint's records in order to verify compliance with the qualifying service eligibility criteria. The audit shall be conducted by a third party independent auditor, and the audit must be performed in accordance with the standards established by the American Institute for Certified Public Accountants (AICPA). To the extent the independent auditor's report concludes that Sprint failed to comply with the service eligibility criteria, Sprint must true-up any difference in payments, convert all noncompliant circuits to the appropriate service, and make the correct payments on a going-forward basis. In the event the auditor's report concludes that Sprint did not comply in any material respect with the service eligibility criteria, Sprint shall reimburse AT&T for the cost of the independent auditor. To the extent the auditor's report concludes that Sprint did comply in all material respects with the service eligibility criteria, AT&T will reimburse Sprint for its reasonable and demonstrable costs associated with the audit. Sprint will maintain appropriate documentation to support its certifications.

5.3.4.4 In the event Sprint converts special access services to UNEs, Sprint shall be subject to the termination liability provisions in the applicable special access tariffs, if any.

5.4 UNE-P

5.4.1 UNE-P is not offered pursuant to this Agreement.

5.4.2 Transition Period for UNE-P

5.4.2.1 For purposes of this Section 5.4, the Transition Period for UNE-P is the twelve (12) month period beginning March 11, 2005 and ending March 10, 2006.

5.4.2.2 For the purposes of this Section 5.4, Embedded Base shall mean UNE-P and any additional elements that are required to be provided in conjunction therewith that were in service for Sprint as of March 10, 2005.

5.4.2.3 Transition Period Pricing. From March 11, 2005, through the completion of the Transition Period, AT&T shall charge a rate for Sprint's Embedded Base of UNE-P equal to the higher of:

5.4.2.3.1 The rate at which Sprint leased that combination of elements on June 15, 2004, plus one dollar ($1); or

5.4.2.3.2 The rate the Commission established, if any, between June 16, 2004, and the effective date of the TRRO, plus one dollar ($1).

5.4.2.3.3 These rates shall be as set forth in Exhibit A and this Section 5.4.

6 Dedicated Transport and Dark Fiber Transport

6.1 Dedicated Transport. Dedicated Transport is defined as AT&T's transmission facilities between wire centers or switches owned by AT&T, or between wire centers or switches owned by AT&T and switches owned by Sprint, including but not limited to DS1, DS3 and OCn level services, as well as dark fiber, dedicated to Sprint. AT&T shall not be required to provide access to OCn level Dedicated Transport under any circumstances pursuant to this Agreement. In addition, except as set forth in Section 6.2 below, AT&T shall not be required to provide to Sprint unbundled access to interoffice transmission facilities that do not connect a pair of wire centers or switches owned by AT&T (Entrance Facilities). AT&T shall provide unbundled access to DS1, DS3 and dark fiber Dedicated Transport except as otherwise set forth in this Section 6.

6.2 Transition for DS1 and DS3 Dedicated Transport Including DS1 and DS3 Entrance Facilities

6.2.1 For purposes of this Section 6.2, the Transition Period for the Embedded Base of DS1 and DS3 Dedicated Transport, Embedded Base Entrance Facilities and for Excess DS1 and DS3 Dedicated Transport is the twelve (12) month period beginning March 11, 2005 and ending March 10, 2006.

6.2.2 For purposes of this Section 6.2, Embedded Base means DS1 and DS3 Dedicated Transport that were in service for Sprint as of March 10, 2005 in those wire centers that, as of that date, met the criteria set forth in 6.2.6.1 or 6.2.6.2. Subsequent disconnects or loss of End Users shall be removed from the Embedded Base.

6.2.3 For purposes of this Section 6, Embedded Base Entrance Facilities means Entrance Facilities that were in service for Sprint as of March 10, 2005. Subsequent disconnects or loss of customers shall be removed from the Embedded Base.

6.2.4 For purposes of this Section 6, Excess DS1 and DS3 Dedicated Transport means those Sprint DS1 and DS3 Dedicated Transport facilities in service as of March 10, 2005, in excess of the caps set forth in Section 6.6. Subsequent disconnects and loss of End Users shall be removed from Excess DS1 and DS3 Loops.

6.2.5 For purposes of this Section 6.2, a Business Line is as defined in 47 C.F.R. § 51.5.

6.2.6 For purposes of this Section 6.2, a Fiber-based collocator is as defined in 47 C.F.R. §51.5.

6.2.7 Notwithstanding anything to the contrary in this Agreement, AT&T shall make available Dedicated Transport as described in this Section 6.2 only for Sprint's Embedded Base, Embedded Base Entrance Facilities, and Excess DS1 and DS3 Dedicated Transport during the Transition Period:

6.2.7.1 DS1 Dedicated Transport where both wire centers at the end points of the route contain 38,000 or more Business Lines or four (4) or more fiber-based collocators, Tier 1.

6.2.7.2 DS3 Dedicated Transport where both wire centers at the end points of the route contain 24,000 or more Business Lines or three (3) or more fiber-based collocators, Tier 1 or Tier 2.

6.2.7.3 A list of wire centers meeting the criteria set forth in Section 6.2.7.1 or 6.2.7.2 above as of March 10, 2005, is available on AT&T's Interconnection Services Web site at www.interconnection.bellsouth.com, as (Initial Wire Center List).

6.2.7.4 Notwithstanding anything to the contrary in this Agreement, AT&T shall make available Entrance Facilities only for Sprint's Embedded Base Entrance Facilities and only during the Transition Period.

6.2.7.5 Notwithstanding the Effective Date of this Agreement, during the Transition Period, the rates for Sprint's Embedded Base of DS1 and DS3 Dedicated Transport and for Sprint's Excess DS1 and DS3 Dedicated Transport, as described in this Section 6.2 shall be as set forth in Exhibit B and the rates for Sprint's Embedded Base Entrance Facilities as described in this Section 6.2 shall be as set forth in Exhibit A.

6.2.7.6 The Transition Period shall apply only to (1) Sprint's Embedded Base and Embedded Base Entrance Facilities; and (2) Sprint's Excess DS1 and DS3 Dedicated Transport. Sprint shall not add new Entrance Facilities pursuant to this Agreement. Further, Sprint shall not add new DS1 or DS3 Dedicated Transport as described in this Section 6.2 pursuant to this Agreement, except pursuant to the self-certification process as set forth in Section 1.8 of this Attachment and as set forth in Section 6.2.7.10 below.

6.2.7.7 Once a wire center exceeds either of the thresholds set forth in Section 6.2.7.1, no DS1 Dedicated Transport unbundling will be required in that wire center except as provided for in 6.2.7.

6.2.7.8 Once a wire center exceeds either of the thresholds set forth in Section 6.2.7.2, no DS3 Dedicated Transport will be required in that wire center except as provided for in 6.2.7.

6.2.7.9 No later than December 9, 2005 Sprint shall submit spreadsheet(s) identifying all of the Embedded Base of circuits, Embedded Base Entrance Facilities, and Excess DS1 and DS3 Dedicated Transport to be either disconnected or converted to other AT&T services pursuant to Section 1.6. The Parties shall negotiate a project schedule for the Conversion of the Embedded Base, Embedded Base Entrance Facilities and Excess DS1 and DS3 Dedicated Transport.

6.2.7.9.1 If Sprint fails to submit the spreadsheet(s) specified in Section 6.2.7.9 for all of its Embedded Base, Embedded Base Entrance Facilities and Excess DS1 and DS3 Dedicated Transport prior to December 9, 2005, AT&T will identify Sprint's remaining Embedded Base, Embedded Base Entrance Facilities and Excess DS1 and DS3 Dedicated Transport, if any, and will transition such circuits to the equivalent tariffed AT&T service(s). Those circuits identified and transitioned by AT&T pursuant to this Section 6.2.7.9.1 shall be subject to all applicable disconnect charges as set forth in this Agreement and the full nonrecurring charges for installation of the equivalent tariffed AT&T service as set forth in AT&T's tariffs.

6.2.7.9.2 For Embedded Base circuits, Embedded Base Entrance Facilities and Excess DS1 and DS3 Dedicated Transport converted pursuant to Section 6.2.7.9 or transitioned pursuant to 6.2.7.9.1, the applicable recurring tariff charge shall apply to each circuit as of the earlier of the date each circuit is converted or transitioned, as applicable, or March 11, 2006.

6.2.7.10 <u>Modifications and Updates to the Wire Center List and Subsequent Transition Periods</u>

6.2.7.10.1 In the event AT&T identifies additional wire centers that meet the criteria set forth in Section 6.2.7.1 or 6.2.7.2, but that were not included in the Initial Wire Center List, AT&T shall include such additional wire centers in CNL**.** Each such list of additional wire centers shall be considered a Subsequent Wire Center List.

6.2.7.10.2 Effective thirty (30) days after the date of a AT&T CNL providing a Subsequent Wire Center List, AT&T shall not be required to provide DS1 and DS3 Dedicated Transport, as applicable, in such additional wire center(s), except pursuant to the self-certification process as set forth in Section 1.8 of this Attachment.

6.2.7.10.3 For purposes of Section 6.2.7.10, AT&T shall make available DS1 and DS3 Dedicated Transport that was in service for Sprint in a wire center on the Subsequent Wire Center List as of the thirtieth (30th) day after the date of AT&T's CNL identifying the Subsequent Wire Center List (Subsequent Embedded Base) until one hundred and fifty (150) days from the date of AT&T's CNL identifying the Subsequent Wire Center List (Subsequent Transition Period).

6.2.7.10.4 Subsequent disconnects or loss of End Users shall be removed from the Subsequent Embedded Base.

6.2.7.10.5 The rates set forth in Exhibit B shall apply to the Subsequent Embedded Base during the Subsequent Transition Period.

6.2.7.10.6 No later than sixty (60) days from AT&T's CNL identifying the Subsequent Wire Center List, Sprint shall submit a spreadsheet(s) identifying the Subsequent Embedded Base of circuits to be disconnected or converted to other AT&T

services. The Parties shall negotiate a project schedule for the Conversion of the Subsequent Embedded Base.

6.2.7.10.6.1 If Sprint fails to submit the spreadsheet(s) specified in Section 6.2.7.10.6 above for all of its Subsequent Embedded Base within sixty (60) days after the date of AT&T's CNL identifying the Subsequent Wire Center List, AT&T will identify Sprint's remaining Subsequent Embedded Base, if any, and will transition such circuits to the equivalent tariffed AT&T service(s). Those circuits identified and transitioned by AT&T shall be subject to the applicable disconnect charges as set forth in this Agreement and the full nonrecurring charges for installation of the equivalent tariffed AT&T service as set forth in AT&T's tariffs.

6.2.7.10.7 For Subsequent Embedded Base circuits converted pursuant to Section 6.2.7.10.6 or transitioned pursuant to Section 6.2.7.10.6.1, the applicable recurring tariff charges shall apply as of the earlier of the date each circuit is converted or transitioned, as applicable, or the first day after the end of the Subsequent Transition Period.

6.3 AT&T shall:

6.3.1 Provide Sprint exclusive use of Dedicated Transport to a particular customer or carrier;

6.3.2 Provide all technically feasible features, functions, and capabilities of Dedicated Transport as outlined within the technical requirements of this section;

6.3.3 Permit, to the extent technically feasible, Sprint to connect Dedicated Transport to equipment designated by Sprint, including but not limited to, Sprint's collocated facilities; and

6.3.4 Permit, to the extent technically feasible, Sprint to obtain the functionality provided by AT&T's digital cross-connect systems.

6.4 AT&T shall offer Dedicated Transport:

6.4.1 As capacity on a shared facility; and
6.4.2 As a circuit (i.e., DS0, DS1, DS3, STS-1) dedicated to Sprint.

6.5 Dedicated Transport may be provided over facilities such as optical fiber, copper twisted pair, and coaxial cable, and shall include transmission equipment such as line terminating equipment, amplifiers, and regenerators.

6.6 Sprint may obtain a maximum of ten (10) unbundled DS1 Dedicated Transport circuits or twelve (12) unbundled DS3 Dedicated Transport circuits on each route where the respective Dedicated Transport is available as a Network Element. A route is defined as a transmission path between one of AT&T's wire centers or switches and another of AT&T's wire centers or switches. A route between two (2) points may pass through one or more intermediate wire centers or switches.

Transmission paths between identical end points are the same "route", irrespective of whether they pass through the same intermediate wire centers or switches, if any.

6.7 Technical Requirements

6.7.1 AT&T shall offer DS0 equivalent interface transmission rates for DS0 or voice grade Dedicated Transport. For DS1 or DS3 circuits, Dedicated Transport shall at a minimum meet the performance, availability, jitter, and delay requirements specified for Customer Interface to Central Office (CI to CO) connections in the applicable industry standards.

6.7.2 AT&T shall offer the following interface transmission rates for Dedicated Transport:

6.7.2.1 DS0 Equivalent;
6.7.2.2 DS1;
6.7.2.3 DS3; and

6.7.2.4 SDH (Synchronous Digital Hierarchy) Standard interface rates are in accordance with International Telecommunications Union (ITU) Recommendation G.707 and Plesiochronous Digital Hierarchy (PDH) rates per ITU Recommendation G.704.

6.7.3 AT&T shall design Dedicated Transport according to its network infrastructure. Sprint shall specify the termination points for Dedicated Transport.

6.7.4 At a minimum, Dedicated Transport shall meet each of the requirements set forth in the applicable industry technical references and AT&T Technical References;

6.7.4.1 Telcordia TR-TSY-000191 Alarm Indication Signals Requirements and Objectives, Issue 1, May 1986.

6.7.4.2 AT&T's TR73501 LightGate®Service Interface and Performance Specifications, Issue D, June 1995.

6.7.4.3 AT&T's TR73525 MegaLink®Service, MegaLink Channel Service and MegaLink Plus Service Interface and Performance Specifications, Issue C, May 1996.

6.8 Unbundled Channelization (Multiplexing)

6.8.1 To the extent Sprint is purchasing DS1 or DS3 or STS-1 Dedicated Transport pursuant to this Agreement, Unbundled Channelization (UC) provides the optional multiplexing capability that will allow a DS1 (1.544 Mbps) or DS3 (44.736 Mbps) or STS-1 (51.84 Mbps) Network Elements to be multiplexed or channelized at a AT&T central office. Channelization can be accomplished through the use of a multiplexer or a digital cross-connect system at the discretion of AT&T. Once UC has been installed, Sprint may request channel activation on a channelized facility and AT&T shall connect the requested facilities via COCIs. The COCI must be

compatible with the lower capacity facility and ordered with the lower capacity facility. This service is available as defined in NECA 4.

6.8.2 AT&T shall make available the following channelization systems and interfaces:

6.8.2.1 DS1 Channelization System: channelizes a DS1 signal into a maximum of twenty-four (24) DS0s. The following COCI are available: Voice Grade, Digital Data and ISDN.

6.8.2.2 DS3 Channelization System: channelizes a DS3 signal into a maximum of twenty-eight (28) DS1s. A DS1 COCI is available with this system.

6.8.2.3 STS-1 Channelization System: channelizes a STS-1 signal into a maximum of twenty-eight (28) DS1s. A DS1 COCI is available with this system.

6.8.3 Technical Requirements. In order to assure proper operation with AT&T provided central office multiplexing functionality, Sprint's channelization equipment must adhere strictly to form and protocol standards. Sprint must also adhere to such applicable industry standards for the multiplex channel bank, for voice frequency encoding, for various signaling schemes, and for sub rate digital access.

6.9 Dark Fiber Transport. Dark Fiber Transport is defined as Dedicated Transport that consists of unactivated optical interoffice transmission facilities without attached signal regeneration, multiplexing, aggregation or other electronics. Except as set forth in Section 6.9.1 below, AT&T shall not be required to provide access to Dark Fiber Transport Entrance Facilities pursuant to this Agreement.

6.9.1 Transition for Dark Fiber Transport and Dark Fiber Transport Entrance Facilities

6.9.1.1 For purposes of this Section 6.9, the Transition Period for the Embedded Base of Dark Fiber Transport is the eighteen (18) month period beginning March 11, 2005 and ending September 10, 2006.

6.9.1.2 For purposes of this Section 6.9, Embedded Base means Dark Fiber Transport that was in service for Sprint as of March 10, 2005 in those wire centers that, as of that date, met the criteria set forth in 6.9.1.5. Subsequent disconnects or loss of End Users shall be removed from the Embedded Base.

6.9.1.3 For purposes of this Section 6.9, Embedded Base Dark Fiber Transport Entrance Facilities means Dark Fiber Entrance Facilities that were in service for Sprint as of March 10, 2005. Subsequent disconnects or loss of customers shall be removed from the Embedded Base.

6.9.1.4 For purposes of this Section 6.9, a Business Line is as defined in 47 C.F.R. § 51.5.

6.9.1.5 For purposes of this Section 6.9, a Fiber-based collocator is as defined in 47 C.F.R. §51.5.

6.9.1.6 Notwithstanding anything to the contrary in this Agreement, AT&T shall make available Dark Fiber Transport as described in this Section 6.9 only for Sprint's Embedded Base during the Transition Period:

6.9.1.6.1 Dark Fiber Transport where both wire centers at the end points of the route contain 24,000 or more Business Lines or three (3) or more fiber-based collocators, Tier 1 or Tier 2.

6.9.1.7 A list of wire centers meeting the criteria set forth in Section 6.9.1.6 above as of March 10, 2005, (Initial List) is available on AT&T's Interconnection Services Web site at www.interconnection.bellsouth.com.

6.9.1.8 Notwithstanding the Effective Date of this Agreement, during the Transition Period, the rates for Sprint's Embedded Base of Dark Fiber Transport as described in Section 6.9.1.2 shall be as set forth in Exhibit B and the rates for Sprint's Embedded Base of Dark Fiber Transport Entrance Facilities as described in Section 6.9.1.3 shall be as set forth in Exhibit A.

6.9.1.9 The Transition Period shall apply only to Sprint's Embedded Base of Dark Fiber Transport and Dark Fiber Entrance Facilities. Sprint shall not add new Dark Fiber Transport as described in this Section 6.9 except pursuant to the self-certification process as set forth in Section 1.8 of this Attachment and as set forth in Section 6.9.1.11 below. Further, Sprint shall not add new Dark Fiber Entrance Facilities pursuant to this Agreement.

6.9.1.10 Once a wire center exceeds either of the thresholds set forth in Section 6.9.1.6.1, no Dark Fiber Transport unbundling will be required in that wire center except as provided for in 6.9.1.6.

6.9.1.11 No later than June 10, 2006 Sprint shall submit spreadsheet(s) identifying all of the Embedded Base of Dark Fiber Transport and Dark Fiber Entrance Facilities to be either disconnected or converted to other AT&T services as Conversions pursuant to Section 1.6. The Parties shall negotiate a project schedule for the Conversion of the Embedded Base.

6.9.1.11.1 If Sprint fails to submit the spreadsheet(s) specified in Section 6.9.1.11 above for all of its Embedded Base prior to June 10, 2006, AT&T will identify Sprint's remaining Embedded Base, if any, and will transition such circuits to the equivalent tariffed AT&T service(s). Those circuits identified and transitioned by AT&T pursuant to this Section 6.9.1.11.1 shall be subject to all applicable disconnect charges as set forth in this Agreement and the full nonrecurring charges for installation of the equivalent tariffed AT&T service as set forth in AT&T's tariffs.

6.9.1.11.2 For Embedded Base circuits converted pursuant to Section 6.9.1.11 or transitioned pursuant to 6.9.1.11.1, the applicable recurring tariff charge shall

apply to each circuit as of the earlier of the date each circuit is converted or transitioned, as applicable, or September 11, 2006.

6.9.1.12 Modifications and Updates to the Wire Center List and Subsequent Transition Periods

6.9.1.12.1 In the event AT&T identifies additional wire centers that meet the criteria set forth in Section 6.9.1.5.1, but that were not included in the Initial Wire Center List, AT&T shall include such additional wire centers in a CNL**.** Each such list of additional wire centers shall be considered a "Subsequent Wire Center List".

6.9.1.12.2 Effective thirty (30) days after the date of a AT&T CNL providing a Subsequent Wire Center List, AT&T shall not be required to provide unbundled access to Dark Fiber Transport, as applicable, in such additional wire center(s), except pursuant to the self-certification process as set forth in Section 1.8 of this Attachment.

6.9.1.12.3 For purposes of Section 6.9.1.11, AT&T shall make available Dark Fiber Transport that were in service for Sprint in a wire center on the Subsequent Wire Center List as of the thirtieth (30th) day after the date of AT&T's CNL identifying the Subsequent Wire Center List (Subsequent Embedded Base) until one hundred and fifty (150) days from the date of AT&T's CNL identifying the Subsequent Wire Center List (Subsequent Transition Period).

6.9.1.12.4 Subsequent disconnects or loss of End Users shall be removed from the Subsequent Embedded Base.

6.9.1.12.5 The rates set forth in Exhibit B shall apply to the Subsequent Embedded Base during the Subsequent Transition Period.

6.9.1.12.6 No later than sixty (60) days from AT&T's CNL identifying the Subsequent Wire Center List, Sprint shall submit a spreadsheet(s) identifying the Subsequent Embedded Base of circuits to be disconnected or converted to other AT&T services. The Parties shall negotiate a project schedule for the Conversion of the Subsequent Embedded Base.

6.9.1.12.6.1 If Sprint fails to submit the spreadsheet(s) specified in Section 6.9.1.12.6 above for all of its Subsequent Embedded Base within sixty (60) days after the date of AT&T's CNL identifying the Subsequent Wire Center List, AT&T will identify Sprint's remaining Subsequent Embedded Base, if any, and will transition such circuits to the equivalent tariffed AT&T service(s). Those circuits identified and transitioned by AT&T shall be subject to the applicable disconnect charges as set forth in this Agreement and the full nonrecurring charges for installation of the equivalent tariffed AT&T service as set forth in AT&T's tariffs.

6.9.1.13 For Subsequent Embedded Base circuits converted pursuant to Section 6.9.1.12.6 or transitioned pursuant to Section 6.9.1.12.6.1, the applicable recurring tariff

charges shall apply as of the earlier of the date each circuit is converted or transitioned, as applicable, or the first day after the end of the Subsequent Transition Period.

6.10 Rearrangements

6.10.1 A request to move a working Sprint CFA to another Sprint CFA, where both CFAs terminate in the same AT&T Central Office (Change in CFA), shall not constitute the establishment of new service. The applicable rates set forth in Exhibit A shall apply.

6.10.2 Requests to re-terminate one end of a facility that is not a Change in CFA constitute the establishment of new service and require disconnection of existing service and the applicable rates set forth in Exhibit A shall apply.

6.10.3 Upon request of Sprint, AT&T shall project manage the Change in CFA or re-termination of a facility as described in Sections 6.10.1 and 6.10.2 above and Sprint may request OC-TS for such orders.

6.10.4 AT&T shall accept a Letter of Authorization (LOA) between Sprint and another carrier that will allow Sprint to connect a facility, or Combination that includes Dedicated Transport to the other carrier's collocation space or to another carrier's CFA associated with higher bandwidth transport.

7 Automatic Location Identification/Data Management System (ALI/DMS)

7.1 911 and E911 Databases

7.1.1 AT&T shall provide Sprint with nondiscriminatory access to 911 and E911 databases on an unbundled basis, in accordance with 47 C.F.R. § 51.319 (f).

7.1.2 The ALI/DMS database contains End User information (including name, address, telephone information, and sometimes special information from the local service provider or End User) used to determine to which PSAP to route the call. The ALI/DMS database is used to provide enhanced routing flexibility for E911. Sprint will be required to provide the AT&T 911 database vendor daily service order updates to E911 database in accordance with Section 8.2.1.

7.2 Technical Requirements

7.2.1 AT&T's 911 database vendor shall provide Sprint the capability of providing updates to the ALI/DMS database through a specified electronic interface. Sprint shall contact AT&T's 911 database vendor directly to request interface. Sprint shall provide updates directly to AT&T's 911 database vendor on a daily basis. Updates shall be the responsibility of Sprint and AT&T shall not be liable for the transactions between Sprint and AT&T's 911 database vendor.

7.2.2 It is Sprint's responsibility to retrieve and confirm statistical data and to correct errors obtained from AT&T's 911 database vendor on a daily basis. All errors will

be assigned a unique error code and the description of the error and the corrective action is described in the CLEC Users Guide for Facility Based Providers that is found on the AT&T Interconnection Web site.

7.2.3 Sprint shall conform to the AT&T standards as described in the CLEC Users Guide to E911 for Facilities Based Providers that is located on the AT&T Interconnection Web site at http://www.interconnection.bellsouth.com/guides.

7.2.4 Stranded Unlocks are defined as End User records in AT&T's ALI/DMS database that have not been migrated for over ninety (90) days to Sprint, as a new provider of local service to the End User. Stranded Unlocks are those End User records that have been "unlocked" by the previous local exchange carrier that provided service to the End User and are open for Sprint to assume responsibility for such records.

7.2.4.1 Based upon End User record ownership information available in the NPAC database, AT&T shall provide a Stranded Unlock annual report to Sprint that reflects all Stranded Unlocks that remain in the ALI/DMS database for over ninety (90) days. Sprint shall review the Stranded Unlock report, identify its End User records and request to either delete such records or migrate the records to Sprint within two (2) months following the date of the Stranded Unlock report provided by AT&T. Sprint shall reimburse AT&T for any charges AT&T's database vendor imposes on AT&T for the deletion of Sprint's records.

7.3 911 PBX Locate Service®. 911 PBX Locate Service is comprised of a database capability and a separate transport component.

7.3.1 Description of Product. The transport component provides a dedicated trunk path from a Private Branch Exchange (PBX) switch to the appropriate AT&T 911 tandem.

7.3.1.1 The database capability allows Sprint to offer an E911 service to its PBX End Users that identifies to the Public Safety Answering Point (PSAP) the physical location of the Sprint PBX 911 End User station telephone number for the 911 call that is placed by the End User.

7.3.2 Sprint may order either the database capability or the transport component as desired or Sprint may order both components of the service.

7.3.3 911 PBX Locate Database Capability. Sprint's End User or Sprint's End User's database management agent (DMA) must provide the End User PBX station telephone numbers and corresponding address and location data to AT&T's 911 database vendor. The data will be loaded and maintained in AT&T's ALI database.

7.3.4 Ordering, provisioning, testing and maintenance shall be provided by Sprint pursuant to the 911 PBX Locate Marketing Service Description (MSD) that is located on the AT&T Interconnection Web site.

7.3.5 Sprint's End User, or Sprint's End User's DMA, must provide ongoing updates to AT&T's 911 database vendor within a commercially reasonable timeframe of all PBX station telephone number adds, moves and deletions. It will be the responsibility of Sprint to ensure that the End User or DMA maintain the data pertaining to each End User's extension managed by the 911 PBX Locate Service product. Sprint should not submit telephone number updates for specific PBX station telephone numbers that are submitted by Sprint's End User, or Sprint's End User's DMA under the terms of 911 PBX Locate product.

7.3.5.1 Sprint must provision all PBX station numbers in the same LATA as the E911 tandem.

7.3.6 Sprint agrees to release, indemnify, defend and hold harmless AT&T from any and all loss, claims, demands, suits, or other action, or any liability whatsoever, whether suffered, made, instituted or asserted by Sprint's End User or by any other party or person, for any personal injury to or death of any person or persons, or for any loss, damage or destruction of any property, whether owned by Sprint or others, or for any infringement or invasion of the right of privacy of any person or persons, caused or claimed to have been caused, directly or indirectly, by the installation, operation, failure to operate, maintenance, removal, presence, condition, location or use of PBX Locate Service features or by any services which are or may be furnished by AT&T in connection therewith, including but not limited to the identification of the telephone number, address or name associated with the telephone used by the party or parties accessing 911 services using 911 PBX Locate Service hereunder, except to the extent caused by AT&T's gross negligence or wilful misconduct. Sprint is responsible for assuring that its authorized End Users comply with the provisions of these terms and that unauthorized persons do not gain access to or use the 911 PBX Locate Service through user names, passwords, or other identifiers assigned to Sprint's End User or DMA pursuant to these terms. Specifically, Sprint's End User or DMA must keep and protect from use by any unauthorized individual identifiers, passwords, and any other security token(s) and devices that are provided for access to this product.

7.3.7 Sprint may only use AT&T PBX Locate Service solely for the purpose of validating and correcting 911 related data for Sprint's End Users' telephone numbers for which it has direct management authority.

7.3.8 <u>911 PBX Locate Transport Component.</u> The 911 PBX Locate Service transport component requires Sprint to order a CAMA type dedicated trunk from Sprint's End User premises to the appropriate AT&T 911 tandem pursuant to the following provisions.

7.3.8.1 Except as otherwise set forth below, a minimum of two (2) End User specific, dedicated 911 trunks are required between the Sprint's End User premises and the AT&T 911 tandem as described in AT&T's TR 73576 and in accordance with the 911 PBX Locate MSD located on the AT&T Interconnection Web site. Sprint is responsible for connectivity between the End User's PBX and Sprint's switch or POP location. Sprint will then order 911 trunks from their switch or POP location to the AT&T 911 tandem. The dedicated trunks shall be, at a minimum, DS0 level trunks configured as part of a digital interface (delivered over a Sprint purchased DS1 facility that hands off at a DS1 or higher level digital or optical interface). Sprint is responsible for ensuring that the PBX switch is capable of sending the calling station's Direct Inward Dial (DID) telephone number to the AT&T 911 tandem in a specified Multi-frequency (MF) Address Signaling Protocol. If the PBX switch supports Primary Rate ISDN (PRI) and the calling stations are DID numbers, then the 911call can be transmitted using PRI, and there will be no requirement for the PBX Locate Transport component.

7.3.9 Ordering and Provisioning. Sprint will submit an ASR to AT&T to order a minimum of two (2) End User specific 911 trunks from its switch or POP location to the AT&T 911 tandem.

7.3.9.1 Testing and maintenance shall be provided by Sprint pursuant to the 911 PBX Locate MSD that is located on the AT&T Interconnection Web site.

7.3.10 Rates for the 911 PBX Locate Service database component are set forth in Exhibit A. Trunks and facilities for 911 PBX Locate transport component may be ordered by Sprint pursuant to the terms and conditions set forth in Attachment 3.

UNBUNDLED NETWORK ELEMENTS - Alabama														Attachment: 2 Exh A			
CATEGORY	RATE ELEMENTS	Interim	Zone	BCS	USOC	RATES($)					Svc Order Submitted Elec per LSR	Svc Order Submitted Manually per LSR	Incremental Charge - Manual Svc Order vs. Electronic-1st	Incremental Charge - Manual Svc Order vs. Electronic-Add'l	Incremental Charge - Manual Svc Order vs. Electronic-Disc 1st	Incremental Charge - Manual Svc Order vs. Electronic-Disc Add'l
							Nonrecurring		NRC Disconnect		OSS Rates($)					
						Rec	First	Add'l	First	Add'l	SOMEC	SOMAN	SOMAN	SOMAN	SOMAN	SOMAN
	The "Zone" shown in the sections for stand-alone loops or loops as part of a combination refers to Geographically Deaveraged UNE Zones. To view Geographically Deaveraged UNE Zone Designations by Central Office, refer to internet Website: http://www.interconnection.bellsouth.com/become_a_clec/html/interconnection.htm															
OPERATIONS SUPPORT SYSTEMS (OSS) - "REGIONAL RATES"																
	NOTE: (1) CLEC should contact its contract negotiator if it prefers the "state specific" OSS charges as ordered by the State Commissions. The OSS charges currently contained in this rate exhibit are the BellSouth "regional" service ordering charges. CLEC may elect either the state specific Commission ordered rates for the service ordering charges, or CLEC may elect the regional service ordering charge, however, CLEC can not obtain a mixture of the two regardless if CLEC has a interconnection															
	NOTE: (2) Any element that can be ordered electronically will be billed according to the SOMEC rate listed in this category. Please refer to BellSouth's Local Ordering Handbook (LOH) to determine if a product can be ordered electronically. For those elements that cannot be ordered electronically at present per the LOH, the listed SOMEC rate in this category reflects the charge that would be billed to a CLEC once electronic ordering capabilities come on-line for that element. Otherwise, the manual															
	OSS-Electronic Service Order Charge, Per Local Service Request (LSR)-UNE Only				SOMEC		3.50	0.00	3.50	0.00						
	OSS-Manual Service Order Charge, Per Local Service Request (LSR)-UNE Only				SOMAN		15.66	0.00	1.97	0.00						
UNE SERVICE DATE ADVANCEMENT CHARGE																
	NOTE: The Expedite charge will be maintained commensurate with BellSouth's FCC No.1 Tariff, Section 5 as applicable.															
	UNE Expedite Charge per Circuit or Line Assignable USOC, per Day			UEF, UDF, UEQ, UDL, UENTW, UDN, UEA, UHL, ULC, USL, U1T12, U1T48, U1TD1, U1TD3, U1TDX, U1TO3, U1TS1, U1TVX, UC1BC, UC1BL, UC1CC, UC1CL, UC1DC, UC1DL, UC1EC, UC1EL, UC1FC, UC1FL, UC1GC, UC1GL, UC1HC, UC1HL, UDL12, UDL48, UDLO3, UDLSX, UE3, ULD12, ULD48, ULDD1, ULDD3, ULDDX, ULDO3, ULDS1, ULDVX, UNC1X, UNC3X, UNCDX, UNCNX, UNCSX, UNCVX, UNLD1, UNLD3, UXTD1, UXTD3, UXTS1, U1TUC, U1TUD, U1TUB, U1TUA, NTCVG, NTCUD, NTCD1	SDASP		200.00									
ORDER MODIFICATION CHARGE																
	Order Modification Charge (OMC)						35.13	0.00	0.00	0.00						
	Order Modification Additional Dispatch Charge (OMCAD)						150.00	0.00	0.00	0.00						
UNBUNDLED EXCHANGE ACCESS LOOP																
	2-WIRE ANALOG VOICE GRADE LOOP															
	2W Analog VG Loop- SL2 w/Loop or Ground Start Signaling-Zone 1		1	UEA	UEAL2	14.38	88.00	55.00	47.24	7.44						
	2W Analog VG Loop- SL2 w/Loop or Ground Start Signaling-Zone 2		2	UEA	UEAL2	22.85	88.00	55.00	47.24	7.44						
	2W Analog VG Loop- SL2 w/Loop or Ground Start Signaling-Zone 3		3	UEA	UEAL2	36.14	88.00	55.00	47.24	7.44						
	2W Analog VG Loop- SL2 w/Reverse Battery Signaling-Zone 1		1	UEA	UEAR2	14.38	88.00	55.00	47.24	7.44						
	2W Analog VG Loop- SL2 w/Reverse Battery Signaling-Zone 2		2	UEA	UEAR2	22.85	88.00	55.00	47.24	7.44						
	2W Analog VG Loop- SL2 w/Reverse Battery Signaling-Zone 3		3	UEA	UEAR2	36.14	88.00	55.00	47.24	7.44						
	Switch-As-Is Conversion rate per UNE Loop, Single LSR, (per DS0)			UEA	URESL		24.89	3.51								
	Switch-As-Is Conversion rate per UNE Loop, Spreadsheet (per DS0)			UEA	URESP		26.37	4.99								
	CLEC to CLEC Conversion Charge w/o outside dispatch			UEA	UREWO		87.72	36.36								
	Loop Tagging-SL2 (SL2)			UEA	URETL		11.21	1.10								

CATEGORY	RATE ELEMENTS	Interim	Zone	BCS	USOC	RATES($)					Svc Order Submitted Elec per LSR	Svc Order Submitted Manually per LSR	Incremental Charge - Manual Svc Order vs. Electronic-1st	Incremental Charge - Manual Svc Order vs. Electronic-Add'l	Incremental Charge - Manual Svc Order vs. Electronic-Disc 1st	Incremental Charge - Manual Svc Order vs. Electronic-Disc Add'l
							Nonrecurring		NRC Disconnect		OSS Rates($)					
						Rec	First	Add'l	First	Add'l	SOMEC	SOMAN	SOMAN	SOMAN	SOMAN	SOMAN
	4-WIRE ANALOG VOICE GRADE LOOP															
	4W Analog VG Loop-Zone 1		1	UEA	UEAL4	25.34	131.97	94.51	59.14	14.50						
	4W Analog VG Loop-Zone 2		2	UEA	UEAL4	38.58	131.97	94.51	59.14	14.50						
	4W Analog VG Loop-Zone 3		3	UEA	UEAL4	60.02	131.97	94.51	59.14	14.50						
	Switch-As-Is Conversion rate per UNE Loop, Single LSR, (per DS0)			UEA	URESL		24.89	3.51								
	Switch-As-Is Conversion rate per UNE Loop, Spreadsheet, (per DS0)			UEA	URESP		26.37	4.99								
	CLEC to CLEC Conversion Charge w/o outside dispatch			UEA	UREWO		87.72	36.36								
	2-WIRE ISDN DIGITAL GRADE LOOP															
	2W ISDN Digital Grade Loop-Zone 1		1	UDN	U1L2X	21.88	117.24	79.77	52.88	10.54						
	2W ISDN Digital Grade Loop-Zone 2		2	UDN	U1L2X	32.85	117.24	79.77	52.88	10.54						
	2W ISDN Digital Grade Loop-Zone 3		3	UDN	U1L2X	48.55	117.24	79.77	52.88	10.54						
	CLEC to CLEC Conversion Charge w/o outside dispatch			UDN	UREWO		91.63	44.16								
	2-WIRE ASYMMETRICAL DIGITAL SUBSCRIBER LINE (ADSL) COMPATIBLE LOOP															
	2W Unbundled ADSL Loop including manual service inquiry & facility reservation-Zone 1		1	UAL	UAL2X	11.01	110.00	68.00	47.24	7.44						
	2W Unbundled ADSL Loop including manual service inquiry & facility reservation-Zone 2		2	UAL	UAL2X	12.73	110.00	68.00	47.24	7.44						
	2W Unbundled ADSL Loop including manual service inquiry & facility reservation-Zone 3		3	UAL	UAL2X	14.30	110.00	68.00	47.24	7.44						
	2W Unbundled ADSL Loop w/o manual service inquiry & facility reservaton-Zone 1		1	UAL	UAL2W	11.01	90.00	57.00	47.24	7.44						
	2W Unbundled ADSL Loop w/o manual service inquiry & facility reservaton-Zone 2		2	UAL	UAL2W	12.73	90.00	57.00	47.24	7.44						
	2W Unbundled ADSL Loop w/o manual service inquiry & facility reservaton-Zone 3		3	UAL	UAL2W	14.30	90.00	57.00	47.24	7.44						
	CLEC to CLEC Conversion Charge w/o outside dispatch			UAL	UREWO		86.20	40.40								
	2-WIRE HIGH BIT RATE DIGITAL SUBSCRIBER LINE (HDSL) COMPATIBLE LOOP															
	2W Unbundled HDSL Loop including manual service inquiry & facility reservation-Zone 1		1	UHL	UHL2X	8.74	110.00	68.00	47.24	7.44						
	2W Unbundled HDSL Loop including manual service inquiry & facility reservation-Zone 2		2	UHL	UHL2X	10.17	110.00	68.00	47.24	7.44						
	2W Unbundled HDSL Loop including manual service inquiry & facility reservation-Zone 3		3	UHL	UHL2X	11.44	110.00	68.00	47.24	7.44						
	2W Unbundled HDSL Loop w/o manual service inquiry and facility reservation-Zone 1		1	UHL	UHL2W	8.74	90.00	57.00	47.24	7.44						
	2W Unbundled HDSL Loop w/o manual service inquiry and facility reservation-Zone 2		2	UHL	UHL2W	10.17	90.00	57.00	47.24	7.44						
	2W Unbundled HDSL Loop w/o manual service inquiry and facility reservation-Zone 3		3	UHL	UHL2W	11.44	90.00	57.00	47.24	7.44						
	CLEC to CLEC Conversion Charge w/o outside dispatch			UHL	UREWO		86.14	40.40								
	4-WIRE HIGH BIT RATE DIGITAL SUBSCRIBER LINE (HDSL) COMPATIBLE LOOP															
	4 Wire Unbundled HDSL Loop including manual service inquiry and facility reservation-Zone 1		1	UHL	UHL4X	13.95	148.36	68.00	51.70	9.73						
	4W Unbundled HDSL Loop including manual service inquiry and facility reservation-Zone 2		2	UHL	UHL4X	15.56	148.36	68.00	51.70	9.73						
	4W Unbundled HDSL Loop including manual service inquiry and facility reservation-Zone 3		3	UHL	UHL4X	15.25	148.36	68.00	51.70	9.73						
	4W Unbundled HDSL Loop w/o manual service inquiry and facility reservation-Zone 1		1	UHL	UHL4W	13.95	94.00	57.00	51.70	9.73						
	4W Unbundled HDSL Loop w/o manual service inquiry and facility reservation-Zone 2		2	UHL	UHL4W	15.56	94.00	57.00	51.70	9.73						
	4W Unbundled HDSL Loop w/o manual service inquiry and facility reservation-Zone 3		3	UHL	UHL4W	15.25	94.00	57.00	51.70	9.73						
	CLEC to CLEC Conversion Charge w/o outside dispatch			UHL	UREWO		86.14	40.40								
	4-WIRE DS1 DIGITAL LOOP															
	4W DS1 Digital Loop-Zone 1		1	USL	USLXX	82.55	252.47	157.54	44.70	11.71						
	4W DS1 Digital Loop-Zone 2		2	USL	USLXX	154.18	252.47	157.54	44.70	11.71						
	4W DS1 Digital Loop-Zone 3		3	USL	USLXX	314.52	252.47	157.54	44.70	11.71						
	Switch-As-Is Conversion rate per UNE Loop, single LSR, (per DS1)			USL	URESL		24.89	3.51								

UNBUNDLED NETWORK ELEMENTS - Alabama														Attachment: 2 Exh A			
CATEGORY		RATE ELEMENTS	Interim	Zone	BCS	USOC	RATES($)					Svc Order Submitted Elec per LSR	Svc Order Submitted Manually per LSR	Incremental Charge - Manual Svc Order vs. Electronic-1st	Incremental Charge - Manual Svc Order vs. Electronic-Add'l	Incremental Charge - Manual Svc Order vs. Electronic-Disc 1st	Incremental Charge - Manual Svc Order vs. Electronic-Disc Add'l
								Nonrecurring		NRC Disconnect		OSS Rates($)					
							Rec	First	Add'l	First	Add'l	SOMEC	SOMAN	SOMAN	SOMAN	SOMAN	SOMAN
		Switch-As-Is Conversion rate per UNE Loop, Spreadsheet, (per DS1)			USL	URESP		26.37	4.99								
		CLEC to CLEC Conversion Charge w/o outside dispatch			USL	UREWO		101.09	43.05								
	4-WIRE 19.2, 56 OR 64 KBPS DIGITAL GRADE LOOP																
		4 Wire Unbundled Digital Loop 2.4 Kbps-Zone 1		1	UDL	UDL2X	26.09	126.27	88.80	59.14	14.50						
		4 Wire Unbundled Digital Loop 2.4 Kbps-Zone 2		2	UDL	UDL2X	35.95	126.27	88.80	59.14	14.50						
		4 Wire Unbundled Digital Loop 2.4 Kbps-Zone 3		3	UDL	UDL2X	37.88	126.27	88.80	59.14	14.50						
		4 Wire Unbundled Digital Loop 4.8 Kbps-Zone 1		1	UDL	UDL4X	26.09	126.27	88.80	59.14	14.50						
		4 Wire Unbundled Digital Loop 4.8 Kbps-Zone 2		2	UDL	UDL4X	35.95	126.27	88.80	59.14	14.50						
		4 Wire Unbundled Digital Loop 4.8 Kbps-Zone 3		3	UDL	UDL4X	37.88	126.27	88.80	59.14	14.50						
		4 Wire Unbundled Digital Loop 9.6 Kbps-Zone 1		1	UDL	UDL9X	26.09	126.27	88.80	59.14	14.50						
		4 Wire Unbundled Digital Loop 9.6 Kbps-Zone 2		2	UDL	UDL9X	35.95	126.27	88.80	59.14	14.50						
		4 Wire Unbundled Digital Loop 9.6 Kbps-Zone 3		3	UDL	UDL9X	37.88	126.27	88.80	59.14	14.50						
		4 Wire Unbundled Digital 19.2 Kbps-Zone 1		1	UDL	UDL19	26.09	126.27	88.80	59.14	14.50						
		4 Wire Unbundled Digital 19.2 Kbps-Zone 2		2	UDL	UDL19	35.95	126.27	88.80	59.14	14.50						
		4 Wire Unbundled Digital 19.2 Kbps-Zone 3		3	UDL	UDL19	37.88	126.27	88.80	59.14	14.50						
		4 Wire Unbundled Digital Loop 56 Kbps-Zone 1		1	UDL	UDL56	26.09	126.27	88.80	59.14	14.50						
		4 Wire Unbundled Digital Loop 56 Kbps-Zone 2		2	UDL	UDL56	35.95	126.27	88.80	59.14	14.50						
		4 Wire Unbundled Digital Loop 56 Kbps-Zone 3		3	UDL	UDL56	37.88	126.27	88.80	59.14	14.50						
		4 Wire Unbundled Digital Loop 64 Kbps-Zone 1		1	UDL	UDL64	26.09	126.27	88.80	59.14	14.50						
		4 Wire Unbundled Digital Loop 64 Kbps-Zone 2		2	UDL	UDL64	35.95	126.27	88.80	59.14	14.50						
		4 Wire Unbundled Digital Loop 64 Kbps-Zone 3		3	UDL	UDL64	37.88	126.27	88.80	59.14	14.50						
		Switch-As-Is Conversion rate per UNE Loop, single LSR, (per DS0)			UDL	URESL		24.89	3.51								
		Switch-As-Is Conversion rate per UNE Loop, Spreadsheet, (per DS0)			UDL	URESP		26.37	4.99								
		CLEC to CLEC Conversion Charge w/o outside dispatch			UDL	UREWO		102.13	49.75								
	2-WIRE Unbundled COPPER LOOP																
		2W Unbundled Copper Loop-Designed including manual service inquiry & facility reservation-Zone 1		1	UCL	UCLPB	11.01	112.46	65.30	47.24	7.44						
		2W Unbundled Copper Loop-Designed including manual service inquiry & facility reservation-Zone 2		2	UCL	UCLPB	12.73	112.46	65.30	47.24	7.44						
		2W Unbundled Copper Loop-Designed including manual service inquiry & facility reservation-Zone 3		3	UCL	UCLPB	14.30	112.46	65.30	47.24	7.44						
		2W Unbundled Copper Loop-Designed w/o manual service inquiry and facility reservation-Zone 1		1	UCL	UCLPW	11.01	91.46	54.30	47.24	7.44						
		2W Unbundled Copper Loop-Designed w/o manual service inquiry and facility reservation-Zone 2		2	UCL	UCLPW	12.73	91.46	54.30	47.24	7.44						
		2W Unbundled Copper Loop-Designed w/o manual service inquiry and facility reservation-Zone 3		3	UCL	UCLPW	14.30	91.46	54.30	47.24	7.44						
		Order Coordination for Unbundled Copper Loops (per loop)			UCL	UCLMC		8.15	8.15								
		CLEC to CLEC Conversion Charge w/o outside dispatch (UCL-Des)			UCL	UREWO		97.23	42.48								
	4-WIRE COPPER LOOP																
		4W Copper Loop-Designed including manual service inquiry and facility reservation-Zone 1		1	UCL	UCL4S	17.36	114.21	67.05	51.70	9.73						
		4W Copper Loop-Designed including manual service inquiry and facility reservation-Zone 2		2	UCL	UCL4S	20.76	135.21	88.05	51.70	9.73						
		4W Copper Loop-Designed including manual service inquiry and facility reservation-Zone 3		3	UCL	UCL4S	28.21	135.21	88.05	51.70	9.73						
		4W Copper Loop-Designed w/o manual service inquiry and facility reservation-Zone 1		1	UCL	UCL4W	17.36	114.21	67.05	51.70	9.73						
		4W Copper Loop-Designed w/o manual service inquiry and facility reservation-Zone 2		2	UCL	UCL4W	20.76	114.21	67.05	51.70	9.73						
		4W Copper Loop-Designed w/o manual service inquiry and facility reservation-Zone 3		3	UCL	UCL4W	28.21	114.21	67.05	51.70	9.73						
		Order Coordination for Unbundled Copper Loops (per loop)			UCL	UCLMC		8.15	8.15								
		CLEC to CLEC conversion Charge w/o outside dispatch			UCL	UREWO		97.23	42.48								
		Order Coordination for Specified Conversion Time (per LSR)			UEA, UDN, UAL, UHL, UDL, USL	OCOSL		18.90									
	Rearrangements																
		EEL to UNE-L Retermination, per 2W Unbundled Voice Loop-SL2			UEA	UREEL		87.72	36.36								
		EEL to UNE-L Retermination, per 4 Wire Unbundled Voice Loop			UEA	UREEL		87.72	36.36								

UNBUNDLED NETWORK ELEMENTS - Alabama														Attachment: 2 Exh A			
CATEGORY		RATE ELEMENTS	Interim	Zone	BCS	USOC	RATES($)					Svc Order Submitted Elec per LSR	Svc Order Submitted Manually per LSR	Incremental Charge - Manual Svc Order vs. Electronic-1st	Incremental Charge - Manual Svc Order vs. Electronic-Add'l	Incremental Charge - Manual Svc Order vs. Electronic-Disc 1st	Incremental Charge - Manual Svc Order vs. Electronic-Disc Add'l
								Nonrecurring		NRC Disconnect		OSS Rates($)					
							Rec	First	Add'l	First	Add'l	SOMEC	SOMAN	SOMAN	SOMAN	SOMAN	SOMAN
		EEL to UNE-L Retermination, per 2W ISDN Loop			UDN	UREEL		91.63	44.16								
		EEL to UNE-L Retermination, per 4 Wire Unbundled Digital Loop			UDL	UREEL		102.13	49.75								
		EEL to UNE-L Retermination, per 4 Wire Unbundled DS1 Loop			USL	UREEL		101.09	43.05								
UNE LOOP COMMINGLING																	
	2-WIRE ANALOG VOICE GRADE LOOP - COMMINGLING																
		2W Analog VG Loop- SL2 w/Loop or Ground Start Signaling-Zone 1		1	NTCVG	UEAL2	14.38	88.00	55.00	47.24	7.44						
		2W Analog VG Loop- SL2 w/Loop or Ground Start Signaling-Zone 2		2	NTCVG	UEAL2	22.85	88.00	55.00	47.24	7.44						
		2W Analog VG Loop- SL2 w/Loop or Ground Start Signaling-Zone 3		3	NTCVG	UEAL2	36.14	88.00	55.00	47.24	7.44						
		2W Analog VG Loop- SL2 w/Reverse Battery Signaling-Zone 1		1	NTCVG	UEAR2	14.38	88.00	55.00	47.24	7.44						
		2W Analog VG Loop- SL2 w/Reverse Battery Signaling-Zone 2		2	NTCVG	UEAR2	22.85	88.00	55.00	47.24	7.44						
		2W Analog VG Loop- SL2 w/Reverse Battery Signaling-Zone 3		3	NTCVG	UEAR2	36.14	88.00	55.00	47.24	7.44						
		Switch-As-Is Conversion rate per UNE Loop, Single LSR, (per DS0)			NTCVG	URESL		24.89	3.51								
		Switch-As-Is Conversion rate per UNE Loop, Spreadsheet (per DS0)			NTCVG	URESP		26.37	4.99								
		CLEC to CLEC Conversion Charge w/o outside dispatch			NTCVG	UREWO		87.72	36.36								
		Loop Tagging-SL2 (SL2)			NTCVG	URETL		11.21	1.10								
	4-WIRE ANALOG VOICE GRADE LOOP - COMMINGLING																
		4W Analog VG Loop-Zone 1		1	NTCVG	UEAL4	25.34	131.97	94.51	59.14	14.50						
		4W Analog VG Loop-Zone 2		2	NTCVG	UEAL4	38.58	131.97	94.51	59.14	14.50						
		4W Analog VG Loop-Zone 3		3	NTCVG	UEAL4	60.02	131.97	94.51	59.14	14.50						
		Switch-As-Is Conversion rate per UNE Loop, Single LSR, (per DS0)			NTCVG	URESL		24.89	3.51								
		Switch-As-Is Conversion rate per UNE Loop, Spreadsheet, (per DS0)			NTCVG	URESP		26.37	4.99								
		CLEC to CLEC Conversion Charge w/o outside dispatch			NTCVG	UREWO		87.72	36.36								
	4-WIRE DS1 DIGITAL LOOP - COMMINGLING																
		4W DS1 Digital Loop-Zone 1		1	NTCD1	USLXX	82.55	252.47	157.54	44.70	11.71						
		4W DS1 Digital Loop-Zone 2		2	NTCD1	USLXX	154.18	252.47	157.54	44.70	11.71						
		4W DS1 Digital Loop-Zone 3		3	NTCD1	USLXX	314.52	252.47	157.54	44.70	11.71						
		Switch-As-Is Conversion rate per UNE Loop, single LSR, (per DS1)			NTCD1	URESL		24.89	3.51								
		Switch-As-Is Conversion rate per UNE Loop, Spreadsheet, (per DS1)			NTCD1	URESP		26.37	4.99								
		CLEC to CLEC Conversion Charge w/o outside dispatch			NTCD1	UREWO		101.09	43.05								
	4-WIRE 19.2, 56 OR 64 KBPS DIGITAL GRADE LOOP - COMMINGLING																
		4 Wire Unbundled Digital Loop 2.4 Kbps-Zone 1		1	NTCUD	UDL2X	26.09	126.27	88.80	59.14	14.50						
		4 Wire Unbundled Digital Loop 2.4 Kbps-Zone 2		2	NTCUD	UDL2X	35.95	126.27	88.80	59.14	14.50						
		4 Wire Unbundled Digital Loop 2.4 Kbps-Zone 3		3	NTCUD	UDL2X	37.88	126.27	88.80	59.14	14.50						
		4 Wire Unbundled Digital Loop 4.8 Kbps-Zone 1		1	NTCUD	UDL4X	26.09	126.27	88.80	59.14	14.50						
		4 Wire Unbundled Digital Loop 4.8 Kbps-Zone 2		2	NTCUD	UDL4X	35.95	126.27	88.80	59.14	14.50						
		4 Wire Unbundled Digital Loop 4.8 Kbps-Zone 3		3	NTCUD	UDL4X	37.88	126.27	88.80	59.14	14.50						
		4 Wire Unbundled Digital Loop 9.6 Kbps-Zone 1		1	NTCUD	UDL9X	26.09	126.27	88.80	59.14	14.50						
		4 Wire Unbundled Digital Loop 9.6 Kbps-Zone 2		2	NTCUD	UDL9X	35.95	126.27	88.80	59.14	14.50						
		4 Wire Unbundled Digital Loop 9.6 Kbps-Zone 3		3	NTCUD	UDL9X	37.88	126.27	88.80	59.14	14.50						
		4 Wire Unbundled Digital 19.2 Kbps-Zone 1		1	NTCUD	UDL19	26.09	126.27	88.80	59.14	14.50						
		4 Wire Unbundled Digital 19.2 Kbps-Zone 2		2	NTCUD	UDL19	35.95	126.27	88.80	59.14	14.50						
		4 Wire Unbundled Digital 19.2 Kbps-Zone 3		3	NTCUD	UDL19	37.88	126.27	88.80	59.14	14.50						
		4 Wire Unbundled Digital Loop 56 Kbps-Zone 1		1	NTCUD	UDL56	26.09	126.27	88.80	59.14	14.50						
		4 Wire Unbundled Digital Loop 56 Kbps-Zone 2		2	NTCUD	UDL56	35.95	126.27	88.80	59.14	14.50						
		4 Wire Unbundled Digital Loop 56 Kbps-Zone 3		3	NTCUD	UDL56	37.88	126.27	88.80	59.14	14.50						
		4 Wire Unbundled Digital Loop 64 Kbps-Zone 1		1	NTCUD	UDL64	26.09	126.27	88.80	59.14	14.50						
		4 Wire Unbundled Digital Loop 64 Kbps-Zone 2		2	NTCUD	UDL64	35.95	126.27	88.80	59.14	14.50						
		4 Wire Unbundled Digital Loop 64 Kbps-Zone 3		3	NTCUD	UDL64	37.88	126.27	88.80	59.14	14.50						
		Switch-As-Is Conversion rate per UNE Loop, single LSR, (per DS0)			NTCUD	URESL	0.00	24.89	3.51	0.00	0.00						
		Switch-As-Is Conversion rate per UNE Loop, Spreadsheet, (per DS0)			NTCUD	URESP	0.00	26.37	4.99	0.00	0.00						
		CLEC to CLEC Conversion Charge w/o outside dispatch			NTCUD	UREWO	0.00	102.13	49.75	0.00	0.00						
		Order Coordination for Specified Conversion Time (per LSR)			NTCVG, NTCUD, NTCD1	OCOSL		18.90									
UNBUNDLED EXCHANGE ACCESS LOOP																	
	2-WIRE ANALOG VOICE GRADE LOOP																
		2W Analog VG Loop- Service Level 1- Zone 1		1	UEANL	UEAL2	12.58	37.81	17.56	23.49	5.30						
		2W Analog VG Loop- Service Level 1- Zone 2		2	UEANL	UEAL2	21.05	37.81	17.56	23.49	5.30						
		2W Analog VG Loop- Service Level 1- Zone 3		3	UEANL	UEAL2	34.34	37.81	17.56	23.49	5.30						
		2W Analog VG Loop- Service Level 1- Zone 1		1	UEANL	UEASL	12.58	37.81	17.56	23.49	5.30						

UNBUNDLED NETWORK ELEMENTS - Alabama														Attachment: 2 Exh A			
CATEGORY		RATE ELEMENTS	Interim	Zone	BCS	USOC	RATES($)					Svc Order Submitted Elec per LSR	Svc Order Submitted Manually per LSR	Incremental Charge - Manual Svc Order vs. Electronic-1st	Incremental Charge - Manual Svc Order vs. Electronic-Add'l	Incremental Charge - Manual Svc Order vs. Electronic-Disc 1st	Incremental Charge - Manual Svc Order vs. Electronic-Disc Add'l
								Nonrecurring		NRC Disconnect		OSS Rates($)					
							Rec	First	Add'l	First	Add'l	SOMEC	SOMAN	SOMAN	SOMAN	SOMAN	SOMAN
		2W Analog VG Loop- Service Level 1- Zone 2		2	UEANL	UEASL	21.05	37.81	17.56	23.49	5.30						
		2W Analog VG Loop- Service Level 1- Zone 3		3	UEANL	UEASL	34.34	37.81	17.56	23.49	5.30						
		Tag Loop at End User Premise			UEANL	URETL		8.93	0.88								
		Loop Testing-Basic 1st Half Hour			UEANL	URET1		34.16	0.00								
		Loop Testing-Basic Additional Half Hour			UEANL	URETA		19.85	19.85								
		Manual Order Coordination for UVL-SL1s (per loop)			UEANL	UEAMC		8.15	8.15								
		Order Coordination for Specified Conversion Time for UVL-SL1 (per			UEANL	OCOSL		18.09									
		Unbundled Non-Design Voice Loop, billing for BST providing make-up (Engineering Information-E.I.)			UEANL	UEANM		13.44									
		CLEC to CLEC Conversion Charge w/o Outside Dispatch (UVL-SL1)			UEANL	UREWO		15.78	8.94								
	2-WIRE Unbundled COPPER LOOP																
		2W Unbundled Copper Loop-Non-Designed Zone 1		1	UEQ	UEQ2X	11.20	34.14	15.10	21.25	4.15						
		2W Unbundled Copper Loop-Non-Designed-Zone 2		2	UEQ	UEQ2X	13.27	34.14	15.10	21.25	4.15						
		2W Unbundled Copper Loop-Non-Designed-Zone 3		3	UEQ	UEQ2X	15.07	34.14	15.10	21.25	4.15						
		Tag Loop at End User Premise			UEQ	URETL		8.93	0.88								
		Loop Testing-Basic 1st Half Hour			UEQ	URET1		34.16	0.00								
		Loop Testing-Basic Additional Half Hour			UEQ	URETA		19.85	19.85								
		Manual Order Coordination 2W Unbundled Copper Loop-Non-Designed (per loop)			UEQ	USBMC		8.15	8.15								
		Unbundled Copper Loop-Non-Designed, billing for BST providing make-up (Engineering Information-E.I.)			UEQ	UEQMU		13.44									
		CLEC to CLEC Conversion Charge w/o Outside Dispatch (UCL-ND)			UEQ	UREWO		14.27	7.43								
LOOP MODIFICATION																	
		Unbundled Loop Modification, Removal of Load Coils-2W pair less than or equal to 18k ft. per Unbundled Loop			UAL, UHL, UCL, UEQ, ULS, UEA, UEANL, UEPSR, UEPSB	ULM2L		0.00	0.00								
		Unbundled Loop Modification Removal of Load Coils-4 Wire less than or equal to 18K ft, per Unbundled Loop			UHL, UCL, UEA	ULM4L		0.00	0.00								
		Unbundled Loop Modification Removal of Bridged Tap Removal, per unbundled loop			UAL, UHL, UCL, UEQ,ULS,UEA, UEANL, UEPSR, UEPSB	ULMBT		32.41	32.41								
SUB-LOOPS																	
	Sub-Loop Distribution																
		Sub-Loop-Per Cross Box Location-CLEC Feeder Facility Set-Up			UEANL, UEF	USBSA		244.42									
		Sub-Loop-Per Cross Box Location-Per 25 Pair Panel Set-Up			UEANL, UEF	USBSB		22.64									
		Sub-Loop-Per Building Equipment Rm-CLEC Feeder Facility Set-Up			UEANL	USBSC		177.45									
		Sub-Loop-Per Building Equipment Room-Per 25 Pair Panel Set-Up			UEANL	USBSD		55.15									
		Sub-Loop Distribution Per 2W Analog VG Loop-Zone 1		1	UEANL	USBN2	11.21	65.80	30.96	45.25	6.70						
		Sub-Loop Distribution Per 2W Analog VG Loop-Zone 2		2	UEANL	USBN2	11.94	65.80	30.96	45.25	6.70						
		Sub-Loop Distribution Per 2W Analog VG Loop-Zone 3		3	UEANL	USBN2	16.86	65.80	30.96	45.25	6.70						
		Order Coordination for Unbundled Sub-Loops, per sub-loop pair			UEANL	USBMC		8.15	8.15								
		Sub-Loop Distribution Per 4W Analog VG Loop -Zone 1		1	UEANL	USBN4	8.46	79.03	44.19	49.71	9.07						
		Sub-Loop Distribution Per 4W Analog VG Loop -Zone 2		2	UEANL	USBN4	16.67	79.03	44.19	49.71	9.07						
		Sub-Loop Distribution Per 4W Analog VG Loop -Zone 3		3	UEANL	USBN4	32.57	79.03	44.19	49.71	9.07						
		Order Coordination for Unbundled Sub-Loops, per sub-loop pair			UEANL	USBMC		8.15	8.15								
		Sub-Loop 2W Intrabuilding Network Cable (INC)			UEANL	USBR2	2.27	53.01	18.17	45.25	6.70						
		Order Coordination for Unbundled Sub-Loops, per sub-loop pair			UEANL	USBMC		8.15	8.15								
		Sub-Loop 4W Intrabuilding Network Cable (INC)			UEANL	USBR4	5.16	59.25	24.41	49.71	9.07						
		Order Coordination for Unbundled Sub-Loops, per sub-loop pair			UEANL	USBMC		8.15	8.15								
		Loop Testing-Basic 1st Half Hour			UEANL	URET1		34.16	0.00								
		Loop Testing-Basic Additional Half Hour			UEANL	URETA		19.85	19.85								
		2W Copper Unbundled Sub-Loop Distribution-Zone 1		1	UEF	UCS2X	6.22	65.80	30.96	45.25	6.70						
		2W Copper Unbundled Sub-Loop Distribution-Zone 2		2	UEF	UCS2X	8.76	65.80	30.96	45.25	6.70						
		2W Copper Unbundled Sub-Loop Distribution-Zone 3		3	UEF	UCS2X	11.27	65.80	30.96	45.25	6.70						
		Order Coordination for Unbundled Sub-Loops, per sub-loop pair			UEF	USBMC		8.15	8.15								
		4 Wire Copper Unbundled Sub-Loop Distribution-Zone 1		1	UEF	UCS4X	6.11	79.03	44.19	49.71	9.07						
		4 Wire Copper Unbundled Sub-Loop Distribution-Zone 2		2	UEF	UCS4X	12.61	79.03	44.19	49.71	9.07						

UNBUNDLED NETWORK ELEMENTS - Alabama														Attachment: 2 Exh A			
CATEGORY		RATE ELEMENTS	Interim	Zone	BCS	USOC	RATES($)					Svc Order Submitted Elec per LSR	Svc Order Submitted Manually per LSR	Incremental Charge - Manual Svc Order vs. Electronic-1st	Incremental Charge - Manual Svc Order vs. Electronic-Add'l	Incremental Charge - Manual Svc Order vs. Electronic-Disc 1st	Incremental Charge - Manual Svc Order vs. Electronic-Disc Add'l
								Nonrecurring		NRC Disconnect		OSS Rates($)					
							Rec	First	Add'l	First	Add'l	SOMEC	SOMAN	SOMAN	SOMAN	SOMAN	SOMAN
		4 Wire Copper Unbundled Sub-Loop Distribution-Zone 3		3	UEF	UCS4X	15.36	79.03	44.19	49.71	9.07						
		Order Coordination for Unbundled Sub-Loops, per sub-loop pair			UEF	USBMC		8.15	8.15								
		Loop Tagging Service Level 1, Unbundled Copper Loop, Non-Designed and Distribution Subloops			UEF, UEANL	URETL		8.93	0.88								
		Loop Testing-Basic 1st Half Hour			UEF	URET1		34.16	0.00								
		Loop Testing-Basic Additional Half Hour			UEF	URETA		19.85	19.85								
	Unbundled Sub-Loop Modification																
		Unbundled Sub-Loop Modification-2-W Copper Dist Load Coil/Equip Removal per 2-W PR			UEF	ULM2X		175.78	5.10								
		Unbundled Sub-loop Modification-4-W Copper Dist Load Coil/Equip Removal per 4-W PR			UEF	ULM4X		175.78	5.10								
		Unbundled Loop Modification, Removal of Bridge Tap, per unbundled loop			UEF	ULMBT		278.20	6.11								
	Unbundled Network Terminating Wire (UNTW)																
		Unbundled Network Terminating Wire (UNTW) per Pair			UENTW	UENPP	0.40	30.01									
	Network Interface Device (NID)																
		Network Interface Device (NID)-1-2 lines			UENTW	UND12		43.23	28.38								
		Network Interface Device (NID)-1-6 lines			UENTW	UND16		63.97	49.11								
		Network Interface Device Cross Connect-2 W			UENTW	UNDC2		5.87	5.87								
		Network Interface Device Cross Connect-4W			UENTW	UNDC4		5.87	5.87								
UNE OTHER, PROVISIONING ONLY - NO RATE																	
		Unbundled Contact Name, Provisioning Only-no rate			UAL, UCL, UDC, UDL, UDN, UEA, UHL, UEANL, UEF, UEQ, UENTW, NTCVG, NTCUD, NTCD1, USL	UNECN	0.00	0.00									
		Unbundled DS1 Loop-Superframe Format Option-no rate			USL, NTCD1	CCOSF	0.00	0.00									
		Unbundled DS1 Loop-Expanded Superframe Format option-no rate			USL, NTCD1	CCOEF	0.00	0.00									
		NID-Dispatch and Service Order for NID installation			UENTW	UNDBX	0.00	0.00									
		UNTW Circuit Establishment, Provisioning Only-No Rate			UENTW	UENCE	0.00	0.00									
LOOP MAKE-UP																	
		Loop Makeup-Preordering w/o Reservation, per working or spare facility queried (Manual).			UMK	UMKLW		20.00	20.00								
		Loop Makeup-Preordering With Reservation, per spare facility queried (Manual).			UMK	UMKLP		21.00	21.00								
		Loop Makeup--With or w/o Reservation, per working or spare facility queried (Mechanized)			UMK	UMKMQ		0.59	0.59								
LINE SPLITTING																	
	END USER ORDERING-CENTRAL OFFICE BASED																
		Line Splitting-per line activation DLEC owned splitter			UEPSR UEPSB	UREOS	0.61										
		Line Splitting-per line activation BST owned-physical			UEPSR UEPSB	UREBP	0.61	37.01	21.19	20.02	9.83						
		Line Splitting-per line activation BST owned-virtual			UEPSR UEPSB	UREBV	0.61	37.01	21.19	20.02	9.83						
	UNBUNDLED EXCHANGE ACCESS LOOP																
	2-WIRE ANALOG VOICE GRADE LOOP																
		2W Analog VG Loop-Service Level 1-Line Splitting- Zone 1		1	UEPSR UEPSB	UEALS	12.58	37.81	17.56	23.49	5.30						
		2W Analog VG Loop-Service Level 1-Line Splitting- Zone 1		1	UEPSR UEPSB	UEABS	12.58	37.81	17.56	23.49	5.30						
		2W Analog VG Loop- Service Level 1-Line Splitting-Zone 2		2	UEPSR UEPSB	UEALS	21.05	37.81	17.56	23.49	5.30						
		2W Analog VG Loop- Service Level 1-Line Splitting-Zone 2		2	UEPSR UEPSB	UEABS	21.05	37.81	17.56	23.49	5.30						
		2W Analog VG Loop-Service Level 1-Line Splitting-Zone 3		3	UEPSR UEPSB	UEALS	34.34	37.81	17.56	23.49	5.30						
		2W Analog VG Loop-Service Level 1-Line Splitting-Zone 3		3	UEPSR UEPSB	UEABS	34.34	37.81	17.56	23.49	5.30						
	PHYSICAL COLLOCATION																
		Physical Collocation-2W Cross Connects (Loop) for Line Splitting			UEPSR UEPSB	PE1LS	0.03	12.30	11.80	6.03	5.44						
	VIRTUAL COLLOCATION																
		Virtual Collocation-2W Cross Connects (Loop) for Line Splitting			UEPSR UEPSB	VE1LS	0.03	12.30	11.80	6.03	5.44						
UNBUNDLED DEDICATED TRANSPORT																	
	INTEROFFICE CHANNEL - DEDICATED TRANSPORT																
		Interoffice Channel-2W VG-per mile			U1TVX	1L5XX	0.008838										
		Interoffice Channel-2W VG-Facility Termination			U1TVX	U1TV2	21.13	40.54	27.41	16.74	6.90						

UNBUNDLED NETWORK ELEMENTS - Alabama														Attachment: 2 Exh A			
CATEGORY		RATE ELEMENTS	Interim	Zone	BCS	USOC	RATES($)					Svc Order Submitted Elec per LSR	Svc Order Submitted Manually per LSR	Incremental Charge - Manual Svc Order vs. Electronic-1st	Incremental Charge - Manual Svc Order vs. Electronic-Add'l	Incremental Charge - Manual Svc Order vs. Electronic-Disc 1st	Incremental Charge - Manual Svc Order vs. Electronic-Disc Add'l
								Nonrecurring		NRC Disconnect		OSS Rates($)					
							Rec	First	Add'l	First	Add'l	SOMEC	SOMAN	SOMAN	SOMAN	SOMAN	SOMAN
		Interoffice Channel-2W VG Rev Bat.-per mile			U1TVX	1L5XX	0.008838										
		Interoffice Channel-2W VG Rev Bat.-Facility Termination			U1TVX	U1TR2	21.13	40.54	27.41	16.74	6.90						
		Interoffice Channel-4W VG-per mile			U1TVX	1L5XX	0.008838										
		Interoffice Channel-4- Wire VG-Facility Termination			U1TVX	U1TV4	18.73	40.54	27.41	16.74	6.90						
		Interoffice Channel-56 kbps-per mile			U1TDX	1L5XX	0.008838										
		Interoffice Channel-56 kbps-Facility Termination			U1TDX	U1TD5	15.12	40.54	27.41	16.74	6.90						
		Interoffice Channel-64 kbps-per mile			U1TDX	1L5XX	0.008838										
		Interoffice Channel-64 kbps-Facility Termination			U1TDX	U1TD6	15.12	40.54	27.41	16.74	6.90						
		Interoffice Channel-DS1-per mile			U1TD1	1L5XX	0.18										
		Interoffice Channel-DS1-Facility Termination			U1TD1	U1TF1	60.16	89.27	81.81	16.35	14.44						
		Interoffice Channel-DS3-per mile			U1TD3	1L5XX	4.09										
		Interoffice Channel-DS3-Facility Termination			U1TD3	U1TF3	703.52	278.75	162.76	60.20	58.46						
		Interoffice Channel-STS-1-per mile			U1TS1	1L5XX	4.09										
		Interoffice Channel-STS-1-Facility Termination			U1TS1	U1TFS	701.37	278.75	162.76	60.20	58.46						
		Local Channel-Dedicated-2W VG			ULDVX, UNCVX	ULDV2	16.07										
		Local Channel-Dedicated-2W VG Rev Bat			ULDVX	ULDR2	16.07										
		Local Channel-Dedicated-4W VG			ULDVX, UNCVX	ULDV4	17.17										
		Local Channel-Dedicated-DS1-Zone 1		1	ULDD1, UNC1X	ULDF1	41.12										
		Local Channel-Dedicated-DS1 -Zone 2		2	ULDD1, UNC1X	ULDF1	57.48										
		Local Channel-Dedicated-DS1 -Zone 3		3	ULDD1, UNC1X	ULDF1	123.77										
		Local Channel-Dedicated-DS3-Per Mile per month			ULDD3, UNC3X	1L5NC	7.96										
		Local Channel-Dedicated-DS3-Facility Termination			ULDD3, UNC3X	ULDF3	479.02										
		Local Channel-Dedicated-STS-1- Per Mile per month			ULDS1, UNCSX	1L5NC	7.96										
		Local Channel-Dedicated-STS-1 -Facility Termination			ULDS1, UNCSX	ULDFS	469.76										
	UNBUNDLED DARK FIBER - Stand Alone or in Combination																
		Dark Fiber-Interoffice Transport, Per Four Fiber Strands, Per Route Mile Or Fraction Thereof			UDF, UDFCX	1L5DF	22.34										
		Dark Fiber-Interoffice Transport, Per Four Fiber Strands, Per Route Mile Or Fraction Thereof			UDF, UDFCX	UDF14		639.09	137.87	317.06	197.66						
DARK FIBER																	
		Dark Fiber, Four Fiber Strands, Per Route Mile or Fraction Thereof per month-Local Channel			UDF, UDFCX	1L5DC	69.37										
		Dark Fiber, Four Fiber Strands, Per Route Mile or Fraction Thereof per month-Local Loop			UDF, UDFCX	1L5DL	69.37										
8XX ACCESS TEN DIGIT SCREENING																	
		8XX Access Ten Digit Screening, Per Call					0.000565										
		8XX Access Ten Digit Screening, w/ 8FL No. Delivery					0.000565										
		8XX Access Ten Digit Screening, w/ POTS No. Delivery					0.000565										
LINE INFORMATION DATA BASE ACCESS (LIDB)																	
		LIDB Common Transport Per Query					0.00002										
		LIDB Validation Per Query					0.012002										
		LIDB Originating Point Code Establishment or Change			OQU	NRBPX		34.32		42.08							
CALLING NAME (CNAM) SERVICE																	
		CNAM for DB Owners, Per Query					0.000902										
		CNAM for Non DB Owners, Per Query					0.000902										
SELECTIVE ROUTING																	
		Selective Routing Per Unique Line Class Code Per Request Per Switch						84.70	84.70	14.11	14.11						
AIN SELECTIVE CARRIER ROUTING																	
		Regional Service Establishment						101,098.91		8,590.70							
		End Office Establishment						169.88	169.88	1.70	1.70						
		Query NRC, per query					0.002749										
AIN - BELLSOUTH AIN SMS ACCESS SERVICE																	
		AIN SMS Access Service-Service Establishment, Per State, Initial Setup			A1N	CAMSE		39.44	39.44	40.69	40.69						
		AIN SMS Access Service-Port Connection-Dial/Shared Access			A1N	CAMDP		7.83	7.83	9.09	9.09						
		AIN SMS Access Service-Port Connection-ISDN Access			A1N	CAM1P		7.83	7.83	9.09	9.09						
		AIN SMS Access Service-User Identification Codes-Per User ID Code			A1N	CAMAU		35.00	35.00	27.06	27.06						
		AIN SMS Access Service-Security Card, Per User ID Code, Initial or Replacement			A1N	CAMRC		41.88	41.88	11.71	11.71						
		AIN SMS Access Service-Storage, Per Unit (100 Kilobytes)					0.002188										

CATEGORY	RATE ELEMENTS	Interim	Zone	BCS	USOC	RATES($)					Svc Order Submitted Elec per LSR	Svc Order Submitted Manually per LSR	Incremental Charge - Manual Svc Order vs. Electronic-1st	Incremental Charge - Manual Svc Order vs. Electronic-Add'l	Incremental Charge - Manual Svc Order vs. Electronic-Disc 1st	Incremental Charge - Manual Svc Order vs. Electronic-Disc Add'l
							Nonrecurring		NRC Disconnect		OSS Rates($)					
						Rec	First	Add'l	First	Add'l	SOMEC	SOMAN	SOMAN	SOMAN	SOMAN	SOMAN
	AIN SMS Access Service-Session, Per Minute					0.59										
	AIN SMS Access Service-Company Performed Session, Per Minute					0.73										
HIGH CAPACITY UNBUNDLED LOCAL LOOP																
DS-3/STS-1 UNBUNDLED LOCAL LOOP - Stand Alone																
	DS3 Unbundled Local Loop-per mile			UE3	1L5ND	8.38										
	DS3 Unbundled Local Loop-Facility Termination			UE3	UE3PX	308.08	451.52	263.94	119.49	83.58						
	STS-1Unbundled Local Loop-per mile			UDLSX	1L5ND	8.38										
	STS-1 Unbundled Local Loop-Facility Termination			UDLSX	UDLS1	319.83	451.52	263.94	119.49	83.58						
ENHANCED EXTENDED LINK (EELs)																
Network Elements Used in Combinations																
	2W VG Loop (SL2) in Combination-Zone 1		1	UNCVX	UEAL2	14.38	88.00	55.00	47.24	7.44						
	2W VG Loop (SL2) in Combination-Zone 2		2	UNCVX	UEAL2	22.85	88.00	55.00	47.24	7.44						
	2W VG Loop (SL2) in Combination-Zone 3		3	UNCVX	UEAL2	36.14	88.00	55.00	47.24	7.44						
	4W Analog VG Loop in Combination -Zone 1		1	UNCVX	UEAL4	25.34	131.97	94.51	59.14	14.50						
	4W Analog VG Loop in Combination -Zone 2		2	UNCVX	UEAL4	38.58	131.97	94.51	59.14	14.50						
	4W Analog VG Loop in Combination -Zone 3		3	UNCVX	UEAL4	60.02	131.97	94.51	59.14	14.50						
	2W ISDN Loop in Combination-Zone 1		1	UNCNX	U1L2X	21.88	117.24	79.77	52.88	10.54						
	2W ISDN Loop in Combination-Zone 2		2	UNCNX	U1L2X	32.85	117.24	79.77	52.88	10.54						
	2W ISDN Loop in Combination-Zone 3		3	UNCNX	U1L2X	48.55	117.24	79.77	52.88	10.54						
	4W 56Kbps Digital Grade Loop in Combination-Zone 1		1	UNCDX	UDL56	26.09	126.27	88.80	59.14	14.50						
	4W 56Kbps Digital Grade Loop in Combination-Zone 2		2	UNCDX	UDL56	35.95	126.27	88.80	59.14	14.50						
	4W 56Kbps Digital Grade Loop in Combination-Zone 3		3	UNCDX	UDL56	37.88	126.27	88.80	59.14	14.50						
	4W 64Kbps Digital Grade Loop in Combination-Zone 1		1	UNCDX	UDL64	26.09	126.27	88.80	59.14	14.50						
	4W 64Kbps Digital Grade Loop in Combination-Zone 2		2	UNCDX	UDL64	35.95	126.27	88.80	59.14	14.50						
	4W 64Kbps Digital Grade Loop in Combination-Zone 3		3	UNCDX	UDL64	37.88	126.27	88.80	59.14	14.50						
	4W DS1 Digital Loop in Combination-Zone 1		1	UNC1X	USLXX	82.55	252.47	157.54	44.70	11.71						
	4W DS1 Digital Loop in Combination-Zone 2		2	UNC1X	USLXX	154.18	252.47	157.54	44.70	11.71						
	4W DS1 Digital Loop in Combination-Zone 3		3	UNC1X	USLXX	314.52	252.47	157.54	44.70	11.71						
	DS3 Local Loop in combination-per mile			UNC3X	1L5ND	8.38										
	DS3 Local Loop in combination-Facility Termination			UNC3X	UE3PX	308.08	451.52	263.94	119.49	83.58						
	STS-1 Local Loop in combination-per mile			UNCSX	1L5ND	8.38										
	STS-1 Local Loop in combination-Facility Termination			UNCSX	UDLS1	319.83	451.52	263.94	119.49	83.58						
	Interoffice Channel in combination-2W VG-per mile			UNCVX	1L5XX	0.008838										
	Interoffice Channel in combination-2W VG-Facility Termination			UNCVX	U1TV2	21.13	40.54	27.41	16.74	6.90						
	Interoffice Channel in combination-4W VG-per mile			UNCVX	1L5XX	0.008838										
	Interoffice Channel in combination-4W VG-Facility Termination			UNCVX	U1TV4	18.73	40.54	27.41	16.74	6.90						
	Interoffice Channel in combination-4W 56 kbps-per mile			UNCDX	1L5XX	0.008838										
	Interoffice Channel in combination-4W 56 kbps-Facility Termination			UNCDX	U1TD5	15.12	40.54	27.41	16.74	6.90						
	Interoffice Channel in combination-4W 64 kbps-per mile			UNCDX	1L5XX	0.008838										
	Interoffice Channel in combination-4W 64 kbps-Facility Termination			UNCDX	U1TD6	15.12	40.54	27.41	16.74	6.90						
	Interoffice Channel in combination-DS1-per mile			UNC1X	1L5XX	0.18										
	Interoffice Channel in combination-DS1 Facility Termination			UNC1X	U1TF1	60.16	89.27	81.81	16.35	14.44						
	Interoffice Channel in combination-DS3-per mile			UNC3X	1L5XX	4.09										
	Interoffice Channel in combination-DS3-Facility Termination			UNC3X	U1TF3	703.52	278.75	162.76	60.20	58.46						
	Interoffice Channel in combination-STS-1-per mile			UNCSX	1L5XX	4.09										
	Interoffice Channel in combination-STS-1 Facility Termination			UNCSX	U1TFS	701.37	278.75	162.76	60.20	58.46						
ADDITIONAL NETWORK ELEMENTS																
Optional Features & Functions:																
	Clear Channel Capability Extended Frame Option-per DS1	I		U1TD1, ULDD1,UNC1X	CCOEF		0.00	0.00	0.00	0.00						
	Clear Channel Capability Super FrameOption-per DS1	I		U1TD1, ULDD1,UNC1X	CCOSF		0.00	0.00	0.00	0.00						
	Clear Channel Capability (SF/ESF) Option-Subsequent Activity-per DS1	I		ULDD1, U1TD1, UNC1X, USL	NRCCC		184.85	23.81	1.99	0.7741						
	C-bit Parity Option-Subsequent Activity-per DS3	i		U1TD3, ULDD3, UE3, UNC3X	NRCC3		219.13	7.67	0.7355	0.00						
	DS1/DS0 Channel System			UNC1X	MQ1	107.19	91.04	62.57	10.54	9.79						
	DS3/DS1Channel System			UNC3X, UNCSX	MQ3	176.20	178.14	93.97	33.26	31.83						
	VG COCI in combination			UNCVX	1D1VG	0.56	6.58	4.72								

UNBUNDLED NETWORK ELEMENTS - Alabama														Attachment: 2 Exh A			
CATEGORY		RATE ELEMENTS	Interim	Zone	BCS	USOC	RATES($)					Svc Order Submitted Elec per LSR	Svc Order Submitted Manually per LSR	Incremental Charge - Manual Svc Order vs. Electronic-1st	Incremental Charge - Manual Svc Order vs. Electronic-Add'l	Incremental Charge - Manual Svc Order vs. Electronic-Disc 1st	Incremental Charge - Manual Svc Order vs. Electronic-Disc Add'l
								Nonrecurring		NRC Disconnect		OSS Rates($)					
							Rec	First	Add'l	First	Add'l	SOMEC	SOMAN	SOMAN	SOMAN	SOMAN	SOMAN
		VG COCI-for Stand Alone Local Loop			UEA	1D1VG	0.56	6.58	4.72								
		VG COCI-for connection to a channelized DS1 Local Channel in the same SWC as collocation			U1TUC	1D1VG	0.56	6.58	4.72								
		2W ISDN COCI (BRITE) in combination			UNCNX	UC1CA	2.41	6.58	4.72								
		2W ISDN COCI (BRITE)-for a Local Loop			UDN	UC1CA	2.41	6.58	4.72								
		2W ISDN COCI (BRITE)-for connection to a channelized DS1 Local Channel in the same SWC as collocation			U1TUB	UC1CA	2.41	6.58	4.72								
		OCU-DP COCI (2.4-64kbs) in combination			UNCDX	1D1DD	1.19	6.58	4.72								
		OCU-DP COCI (2.4-64kbs)-for Stand Alone Local Loop			UDL	1D1DD	1.19	6.58	4.72								
		OCU-DP COCI (2.4-64kbs)-for connection to a channelized DS1 Local Channel in the same SWC as collocation			U1TUD	1D1DD	1.19	6.58	4.72								
		DS1 COCI in combination			UNC1X	UC1D1	13.47	6.58	4.72								
		DS1 COCI-for Stand Alone Local Channel			ULDD1	UC1D1	13.47	6.58	4.72								
		DS1 COCI-for Stand Alone Interoffice Channel			U1TD1	UC1D1	13.47	6.58	4.72								
		DS1 COCI-for Stand Alone Local Loop			USL	UC1D1	13.47	6.58	4.72								
		DS1 COCI-for connection to a channelized DS1 Local Channel in the same SWC as collocation			U1TUA	UC1D1	13.47	6.58	4.72								
		Wholesale to UNE, Switch-As-Is Conversion Charge			UNCVX, U1TVX, UNCDX, U1TDX, UNC1X, U1TD1,UNC3X, U1TD3, UNCSX, U1TS1, UDF,UDFCX	UNCCC		5.59	5.59								
		Unbundled Misc Rate Element, SNE SAI, Single Network Element-Switch As Is Non-recurring Charge, per circuit (LSR)	I		U1TVX, U1TDX, U1TD1, U1TD3, U1TS1, UDF, UE3	URESL		36.70	16.06								
		Unbundled Misc Rate Element, SNE SAI, Single Network Element-Switch As Is Non-recurring Charge, incremental charge per circuit on a spreadsheet	i		U1TVX, U1TDX, U1TD1, U1TD3, U1TS1, UDF, UE3	URESP		1.48	1.48								
		UNE Reconfiguration Change Charge per Circuit	I		UNC1X	URERC		35.00	35.00								
		UNE Reconfiguration Change Charge per Circuit Project Managed	I		UNC1X	URERP		1.48	1.48								
	Access to DCS - Customer Reconfiguration (FlexServ)																
		Customer Reconfiguration Establishment						1.48		1.84							
		DS1 DCS Termination with DS0 Switching					29.46	25.55	19.66	16.63	13.38						
		DS1 DCS Termination with DS1 Switching					9.94	18.47	12.58	12.21	8.96						
		DS3 DCS Termination with DS1 Switching					105.16	25.55	19.66	16.63	13.38						
	Node (SynchroNet)																
		Node per month			UNCDX	UNCNT	15.77										
	Service Rearrangements																
		NRC-Change in Facility Assignment per circuit Service Rearrangement	I		U1TVX, U1TDX, UEA, UDL, U1TUC, U1TUD, U1TUB, ULDVX, ULDDX, UNCVX, UNCDX, UNC1X	URETD		101.09	43.05								
		NRC-Change in Facility Assignment per circuit Project Management (added to CFA per circuit if project managed)	I		U1TVX, U1TDX, UEA, UDL, U1TUC, U1TUD, U1TUB, ULDVX, ULDDX, UNCVX, UNCDX, UNC1X	URETB		1.28	1.28								
		NRC-Order Coordination Specific Time-Dedicated Transport	I		UNC1X	OCOSR		18.93	18.93								
COMMINGLING																	

UNBUNDLED NETWORK ELEMENTS - Alabama														Attachment: 2 Exh A			
CATEGORY		RATE ELEMENTS	Interim	Zone	BCS	USOC	RATES($)					Svc Order Submitted Elec per LSR	Svc Order Submitted Manually per LSR	Incremental Charge - Manual Svc Order vs. Electronic-1st	Incremental Charge - Manual Svc Order vs. Electronic-Add'l	Incremental Charge - Manual Svc Order vs. Electronic-Disc 1st	Incremental Charge - Manual Svc Order vs. Electronic-Disc Add'l
								Nonrecurring		NRC Disconnect		OSS Rates($)					
							Rec	First	Add'l	First	Add'l	SOMEC	SOMAN	SOMAN	SOMAN	SOMAN	SOMAN
		Commingling Authorization			UNCVX, UNCDX, UNC1X, UNC3X, UNCSX, U1TD1, U1TD3, U1TS1, UE3, UDLSX, U1TVX, U1TDX, U1TUB, ULDVX, ULDD1, ULDD3, ULDS1	CMGAU	0.00	0.00	0.00	0.00	0.00						
	Commingled (UNE part of single bandwidth circuit)																
		Commingled VG COCI			XDV2X, NTCVG	1D1VG	0.56	6.58	4.72								
		Commingled Digital COCI			XDV6X, NTCUD	1D1DD	1.19	6.58	4.72								
		Commingled ISDN COCI			XDD4X	UC1CA	2.41	6.58	4.72								
		Commingled 2W VG Interoffice Channel			XDV2X	U1TV2	21.13	40.54	27.41	16.74	6.90						
		Commingled 4W VG Interoffice Channel			XDV6X	U1TV4	18.73	40.54	27.41	16.74	6.90						
		Commingled 56kbps Interoffice Channel			XDD4X	U1TD5	15.12	40.54	27.41	16.74	6.90						
		Commingled 64kbps Interoffice Channel			XDD4X	U1TD6	15.12	40.54	27.41	16.74	6.90						
		Commingled VG/DS0 Interoffice Channel Mileage			XDV2X, XDV6X, XDD4X	1L5XX	0.008838										
		Commingled 2W Local Loop Zone 1		1	XDV2X	UEAL2	14.38	88.00	55.00	47.24	7.44						
		Commingled 2W Local Loop Zone 2		2	XDV2X	UEAL2	22.85	88.00	55.00	47.24	7.44						
		Commingled 2W Local Loop Zone 3		3	XDV2X	UEAL2	36.14	88.00	55.00	47.24	7.44						
		Commingled 4W Local Loop Zone 1		1	XDV6X	UEAL4	25.34	131.97	94.51	59.14	14.50						
		Commingled 4W Local Loop Zone 2		2	XDV6X	UEAL4	38.58	131.97	94.51	59.14	14.50						
		Commingled 4W Local Loop Zone 3		3	XDV6X	UEAL4	60.02	131.97	94.51	59.14	14.50						
		Commingled 56kbps Local Loop Zone 1		1	XDD4X	UDL56	26.09	126.27	88.80	59.14	14.50						
		Commingled 56kbps Local Loop Zone 2		2	XDD4X	UDL56	35.95	126.27	88.80	59.14	14.50						
		Commingled 56kbps Local Loop Zone 3		3	XDD4X	UDL56	37.88	126.27	88.80	59.14	14.50						
		Commingled 64kbps Local Loop Zone 1		1	XDD4X	UDL64	26.09	126.27	88.80	59.14	14.50						
		Commingled 64kbps Local Loop Zone 2		2	XDD4X	UDL64	35.95	126.27	88.80	59.14	14.50						
		Commingled 64kbps Local Loop Zone 3		3	XDD4X	UDL64	37.88	126.27	88.80	59.14	14.50						
		Commingled ISDN Local Loop Zone 1		1	XDD4X	U1L2X	21.88	117.24	79.77	52.88	10.54						
		Commingled ISDN Local Loop Zone 2		2	XDD4X	U1L2X	32.85	117.24	79.77	52.88	10.54						
		Commingled ISDN Local Loop Zone 3		3	XDD4X	U1L2X	48.55	117.24	79.77	52.88	10.54						
		Commingled DS1 COCI			XDH1X, NTCD1	UC1D1	13.47	6.58	4.72								
		Commingled DS1 Interoffice Channel			XDH1X	U1TF1	60.16	89.27	81.81	16.35	14.44						
		Commingled DS1 Interoffice Channel Mileage			XDH1X	1L5XX	0.18										
		Commingled DS1/DS0 Channel System			XDH1X	MQ1	107.19	91.04	62.57	10.54	9.79						
		Commingled DS1 Local Loop Zone 1		1	XDH1X	USLXX	82.55	252.47	157.54	44.70	11.71						
		Commingled DS1 Local Loop Zone 2		2	XDH1X	USLXX	154.18	252.47	157.54	44.70	11.71						
		Commingled DS1 Local Loop Zone 3		3	XDH1X	USLXX	314.52	252.47	157.54	44.70	11.71						
		Commingled DS3 Local Loop			HFQC6	UE3PX	308.08	451.52	263.94	119.49	83.58						
		Commingled DS3/STS-1 Local Loop Mileage			HFQC6, HFRST	1L5ND	8.38										
		Commingled STS-1 Local Loop			HFRST	UDLS1	319.83	451.52	263.94	119.49	83.58						
		Commingled DS3/DS1 Channel System			HFQC6	MQ3	176.20	178.14	93.97	33.26	31.83						
		Commingled DS3 Interoffice Channel			HFQC6	U1TF3	703.52	278.75	162.76	60.20	58.46						
		Commingled DS3 Interoffice Channel Mileage			HFQC6	1L5XX	4.09										
		Commingled STS-1Interoffice Channel			HFRST	U1TFS	701.37	278.75	162.76	60.20	58.46						
		Commingled STS-1Interoffice Channel Mileage			HFRST	1L5XX	4.09										
		Commingled Dark Fiber-Interoffice Transport, Per Four Fiber Strands, Per Route Mile Or Fraction Thereof			HEQDL	1L5DF	22.34										
		Commingled Dark Fiber-Interoffice Transport, Per Four Fiber Strands, Per Route Mile Or Fraction Thereof			HEQDL	UDF14		639.09	137.87	317.06	197.66						
SIGNALING (CCS7)																	
	NOTE:"bk" beside a rate indicates that the parties have agreed to bill and keep for that element pursuant to the terms and conditions in Attachment 3.																
		CCS7 Signaling Usage, Per TCAP Message					0.0000569bk										
		CCS7 Signaling Usage, Per ISUP Message					0.0000142bk										
LNP Query Service																	
		LNP Charge Per query					0.000757										

CATEGORY	RATE ELEMENTS	Interim	Zone	BCS	USOC	RATES($)					Svc Order Submitted Elec per LSR	Svc Order Submitted Manually per LSR	Incremental Charge - Manual Svc Order vs. Electronic-1st	Incremental Charge - Manual Svc Order vs. Electronic-Add'l	Incremental Charge - Manual Svc Order vs. Electronic-Disc 1st	Incremental Charge - Manual Svc Order vs. Electronic-Disc Add'l
							Nonrecurring		NRC Disconnect		OSS Rates($)					
						Rec	First	Add'l	First	Add'l	SOMEC	SOMAN	SOMAN	SOMAN	SOMAN	SOMAN
	LNP Service Establishment Manual						12.52		11.51							
	LNP Service Provisioning with Point Code Establishment						593.49	303.20	268.93	197.74						
911 PBX LOCATE																
911 PBX LOCATE DATABASE CAPABILITY																
	Service Establishment per CLEC per End User Account			9PBDC	9PBEU		1,813.00									
	Changes to TN Range or Customer Profile			9PBDC	9PBTN		181.44									
	Per Telephone Number (Monthly)			9PBDC	9PBMM	0.07										
	Change Company (Service Provider) ID			9PBDC	9PBPC		532.60									
	PBX Locate Service Support per CLEC (Monthlt)			9PBDC	9PBMR	181.33										
	Service Order Charge			9PBDC	9PBSC		15.66									
911 PBX LOCATE TRANSPORT COMPONENT																
See Att 3																
UNBUNDLED LOCAL EXCHANGE SWITCHING(PORTS)																
The Exchange Switching Port Rates Reflected Here Apply to Embedded Base Switching Ports as of March 10, 2005 and Consist of the TELRIC Cost Based Rates Plus $1.00 in Accordance with the TRRO.																
EXCHANGE PORT RATES																
NOTE: Although the Port Rate includes all available features in GA, KY, LA & TN, the desired features will need to be ordered using retail USOCs																
2-WIRE VOICE GRADE LINE PORT RATES (RES)																
	Exchange Ports-2W Analog Line Port- Res.			UEPSR	UEPRL	2.38	2.38	2.27	1.42	1.33						
	Exchange Ports-2W Analog Line Port with Caller ID-Res.			UEPSR	UEPRC	2.38	2.38	2.27	1.42	1.33						
	Exchange Ports-2W Analog Line Port outgoing only-Res.			UEPSR	UEPRO	2.38	2.38	2.27	1.42	1.33						
	Exchange Ports-2W VG unbundled AL extended local dialing parity Port with Caller ID-Res.			UEPSR	UEPAR	2.38	2.38	2.27	1.42	1.33						
	Exchange Ports-2W VG unbundled res, low usage line port with Caller ID (LUM)			UEPSR	UEPAP	2.38	2.38	2.27	1.42	1.33						
	Exchange Ports-2W VG AL Residence Dialing Plan w/o Caller Id			UEPSR	UEPWA	2.38	2.38	2.27	1.42	1.33						
	2W voice unbundled Low Usage Line Port w/o Caller ID Capability			UEPSR	UEPRT	2.38	2.38	2.27	1.42	1.33						
	Subsequent Activity			UEPSR	USASC	0.00	0.00	0.00								
FEATURES																
	All Available Vertical Features			UEPSR	UEPVF	1.98	0.00	0.00								
2-WIRE VOICE GRADE LINE PORT RATES (BUS)																
	Exchange Ports-2W Analog Line Port w/o Caller ID-Bus			UEPSB	UEPBL	2.38	2.38	2.27	1.42	1.33						
	Exchange Ports-2W VG unbundled Line Port with unbundled port with Caller+E484 ID-Bus.			UEPSB	UEPBC	2.38	2.38	2.27	1.42	1.33						
	Exchange Ports-2W Analog Line Port outgoing only-Bus.			UEPSB	UEPBO	2.38	2.38	2.27	1.42	1.33						
	Exchange Ports-2W VG unbundled AL extended local dialing parity Port with Caller ID-Bus.			UEPSB	UEPAW	2.38	2.38	2.27	1.42	1.33						
	Exhange Ports-2W VG unbundled incoming only port with Caller ID-Bus			UEPSB	UEPB1	2.38	2.38	2.27	1.42	1.33						
	Exchange Ports-2W Voice AL Business Dialing Plan w/o Caller ID			UEPSB	UEPWB	2.38	2.38	2.27	1.42	1.33						
	2W voice unbundled Incoming Only Port w/o Caller ID Capability			UEPSB	UEPBE	2.38	2.38	2.27	1.42	1.33						
	Subsequent Activity			UEPSB	USASC	0.00	0.00	0.00								
FEATURES																
	All Available Vertical Features			UEPSB	UEPVF	1.98	0.00	0.00								
EXCHANGE PORT RATES (DID & PBX)																
	2W VG Unbundled 2-Way PBX Trunk-Res			UEPSE	UEPRD	2.38	31.27	14.85	13.94	0.90						
	2W VG Line Side Unbundled 2-Way PBX Trunk-Bus			UEPSP	UEPPC	2.38	31.27	14.85	13.94	0.90						
	2W VG Line Side Unbundled Outward PBX Trunk-Bus			UEPSP	UEPPO	2.38	31.27	14.85	13.94	0.90						
	2W VG Line Side Unbundled Incoming PBX Trunk-Bus			UEPSP	UEPP1	2.38	31.27	14.85	13.94	0.90						
	2W Analog Long Distance Terminal PBX Trunk-Bus			UEPSP	UEPLD	2.38	31.27	14.85	13.94	0.90						
	2W Voice Unbundled 2-Way PBX AL Calling Port			UEPSP	UEPA2	2.38	31.27	14.85	13.94	0.90						
	2W Voice Unbundled PBX LD Terminal Ports			UEPSP	UEPLD	2.38	31.27	14.85	13.94	0.90						
	2W Vice Unbundled 2-Way PBX Usage Port			UEPSP	UEPXA	2.38	31.27	14.85	13.94	0.90						
	2W Voice Unbundled PBX Toll Terminal Hotel Ports			UEPSP	UEPXB	2.38	31.27	14.85	13.94	0.90						
	2W Voice Unbundled PBX LD DDD Terminals Port			UEPSP	UEPXC	2.38	31.27	14.85	13.94	0.90						
	2W Voice Unbundled PBX LD Terminal Switchboard Port			UEPSP	UEPXD	2.38	31.27	14.85	13.94	0.90						
	2W Voice Unbundled PBX LD Terminal Switchboard IDD Capable Port			UEPSP	UEPXE	2.38	31.27	14.85	13.94	0.90						
	2W Voice Unbundled 2-Way PBX Hotel/Hospital Economy Administrative Calling Port			UEPSP	UEPXL	2.38	31.27	14.85	13.94	0.90						

UNBUNDLED NETWORK ELEMENTS - Alabama														Attachment: 2 Exh A			
CATEGORY	RATE ELEMENTS	Interim	Zone	BCS	USOC	RATES($)					Svc Order Submitted Elec per LSR	Svc Order Submitted Manually per LSR	Incremental Charge - Manual Svc Order vs. Electronic-1st	Incremental Charge - Manual Svc Order vs. Electronic-Add'l	Incremental Charge - Manual Svc Order vs. Electronic-Disc 1st	Incremental Charge - Manual Svc Order vs. Electronic-Disc Add'l
							Nonrecurring		NRC Disconnect		OSS Rates($)					
						Rec	First	Add'l	First	Add'l	SOMEC	SOMAN	SOMAN	SOMAN	SOMAN	SOMAN
	2W Voice Unbundled 2-Way PBX Hotel/Hospital Economy Rm Calling Port			UEPSP	UEPXM	2.38	31.27	14.85	13.94	0.90						
	2W Voice Unbundled 1-Way Outgoing PBX Hotel/Hospital Discount Rm Calling Port			UEPSP	UEPXO	2.38	31.27	14.85	13.94	0.90						
	2W Voice Unbundled 1-Way Outgoing PBX Measured Port			UEPSP	UEPXS	2.38	31.27	14.85	13.94	0.90						
	Subsequent Activity			UEPSP	USASC	0.00	0.00	0.00								
FEATURES																
	All Available Vertical Features			UEPSP UEPSE	UEPVF	1.98	0.00	0.00								
NOTE: Transmission/usage charges associated with POTS circuit switched usage will also apply to circuit switched voice and/or circuit switched data transmission by B-Channels associated with 2-wire ISDN ports.																
NOTE: Access to B Channel or D Channel Packet capabilities will be available only through BFR/New Business Request Process. Rates for the packet capabilities will be determined via the Bona Fide Request/New Business Request Process.																
2-WIRE VOICE GRADE LINE PORT RATES (DID)																
	Exchange Ports-2W DID Port			UEPEX	UEPP2	9.05	119.31	18.74	59.90	3.76						
2-WIRE VOICE GRADE LINE PORT RATES (ISDN-BRI)																
	Exchange Ports-2W ISDN Port (See Notes below.)			UEPTX, UEPSX	U1PMA	10.79	72.77	52.99	47.79	10.74						
	All Features Offered			UEPTX, UEPSX	UEPVF	1.98	0.00	0.00								
	Exchange Ports-2W ISDN Port -- Channel Profiles			UEPTX, UEPSX	U1UMA	0.00	0.00	0.00								
NOTE: Transmission/usage charges associated with POTS circuit switched usage will also apply to circuit switched voice and/or circuit switched data transmission by B-Channels associated with 2-wire ISDN ports.																
NOTE: Access to B Channel or D Channel Packet capabilities will be available only through BFR/New Business Request Process. Rates for the packet capabilities will be determined via the Bona Fide Request/New Business Request Process.																
UNBUNDLED PORT with REMOTE CALL FORWARDING CAPABILITY																
UNBUNDLED REMOTE CALL FORWARDING SERVICE - RESIDENCE																
	Unbundled Remote Call Forwarding Service, Area Calling, Res			UEPVR	UERAC	2.38	2.38	2.27	1.42	1.33						
	Unbundled Remote Call Forwarding Service, Local Calling-Res			UEPVR	UERLC	2.38	2.38	2.27	1.42	1.33						
	Unbundled Remote Call Forwarding Service, InterLATA-Res			UEPVR	UERTE	2.38	2.38	2.27	1.42	1.33						
	Unbundled Remote Call Forwarding Service, IntraLATA-Res			UEPVR	UERTR	2.38	2.38	2.27	1.42	1.33						
Non-Recurring																
	Unbundled Remote Call Forwarding Service -Conversion-Switch-as-is			UEPVR	USAC2		0.10	0.10								
	Unbundled Remote Call Forwarding Service -Conversion with allowed change (PIC and LPIC)			UEPVR	USACC		0.10	0.10								
UNBUNDLED REMOTE CALL FORWARDING - Bus																
	Unbundled Remote Call Forwarding Service, Area Calling-Bus			UEPVB	UERAC	2.38	2.38	2.27	1.42	1.33						
	Unbundled Remote Call Forwarding Service, Local Calling-Bus			UEPVB	UERLC	2.38	2.38	2.27	1.42	1.33						
	Unbundled Remote Call Forwarding Service, InterLATA-Bus			UEPVB	UERTE	2.38	2.38	2.27	1.42	1.33						
	Unbundled Remote Call Forwarding Service, IntraLATA-Bus			UEPVB	UERTR	2.38	2.38	2.27	1.42	1.33						
	Unbundled Remote Call Forwarding Service Expanded and Exception Local Calling			UEPVB	UERVJ	2.38	2.38	2.27	1.42	1.33						
Non-Recurring																
	Unbundled Remote Call Forwarding Service-Conversion-Switch-as-is			UEPVB	USAC2		0.10	0.10								
	Unbundled Remote Call Forwarding Service -Conversion with allowed change (PIC and LPIC)			UEPVB	USACC		0.10	0.10								
UNBUNDLED LOCAL SWITCHING, PORT USAGE																
End Office Switching (Port Usage)																
	End Office Switching Function, Per MOU					0.0007025										
	End Office Trunk Port-Shared, Per MOU					0.0001638										
Tandem Switching (Port Usage) (Local or Access Tandem)																
	Tandem Switching Function Per MOU					0.000095										
	Tandem Trunk Port-Shared, Per MOU					0.0002015										
	Tandem Switching Function Per MOU (Melded)					0.000040993										
	Tandem Trunk Port-Shared, Per MOU (Melded)					0.000086947										
Melded Factor: 43.15% of the Tandem Rate																
Common Transport																
	Common Transport-Per Mile, Per MOU					0.0000023										
	Common Transport-Facilities Termination Per MOU					0.0003224										
UNBUNDLED PORT/LOOP COMBINATIONS - COST BASED RATES																
>Cost Based Rates are applied where BellSouth is required by FCC and/or State Commission rule to provide Unbundled Local Switching or Switch Ports.																
> The UNE-P Switching Port Rates Reflected in the Cost Based Section Apply to Embedded Base UNE-Ps as of March 10, 2005 and Consist of the TELRIC Cost Based Rates Plus $1.00 in Accordance with the TRRO.																
>Features shall apply to the Unbundled Port/Loop Combination - Cost Based Rate section in the same manner as they are applied to the Stand-Alone Unbundled Port section of this Rate Exhibit.																
>End Office and Tandem Switching Usage and Common Transport Usage rates in the Port section of this rate exhibit shall apply to all combinations of loop/port network elements except for UNE Coin Port/Loop Combinations.																
>The first and additional Port nonrecurring charges apply to Not Currently Combined Combos. For Currently Combined Combos the nonrecurring charges shall be those identified in the Nonrecurring - Currently Combined sections.																
2-WIRE VOICE GRADE LOOP WITH 2-WIRE LINE PORT (RES)																

CATEGORY	RATE ELEMENTS	Interim	Zone	BCS	USOC	RATES($)					Svc Order Submitted Elec per LSR	Svc Order Submitted Manually per LSR	Incremental Charge - Manual Svc Order vs. Electronic-1st	Incremental Charge - Manual Svc Order vs. Electronic-Add'l	Incremental Charge - Manual Svc Order vs. Electronic-Disc 1st	Incremental Charge - Manual Svc Order vs. Electronic-Disc Add'l
							Nonrecurring		NRC Disconnect		OSS Rates($)					
						Rec	First	Add'l	First	Add'l	SOMEC	SOMAN	SOMAN	SOMAN	SOMAN	SOMAN
	UNE Port/Loop Combination Rates															
	2W VG Loop/Port Combo-Zone 1					13.70										
	2W VG Loop/Port Combo-Zone 2					22.19										
	2W VG Loop/Port Combo-Zone 3					35.80										
	UNE Loop Rates															
	2W VG Loop (SL1)-Zone 1		1	UEPRX	UEPLX	11.55										
	2W VG Loop (SL1)-Zone 2		2	UEPRX	UEPLX	20.04										
	2W VG Loop (SL1)-Zone 3		3	UEPRX	UEPLX	33.65										
	2-Wire Voice Grade Line Port Rates (Res)															
	2W voice unbundled port-residence			UEPRX	UEPRL	2.15	40.19	19.83	24.91	6.63						
	2W voice unbundled port with Caller ID-res			UEPRX	UEPRC	2.15	40.19	19.83	24.91	6.63						
	2W voice unbundled port outgoing only-res			UEPRX	UEPRO	2.15	40.19	19.83	24.91	6.63						
	2W VG unbundled AL extended local dialing parity port with Caller ID-res			UEPRX	UEPAR	2.15	40.19	19.83	24.91	6.63						
	2W voice unbundles res, low usage line port with Caller ID (LUM)			UEPRX	UEPAP	2.15	40.19	19.83	24.91	6.63						
	2W Voice Unbundled AL Residence Dialing Plan w/o Caller ID			UEPRX	UEPWA	2.15	40.19	19.83	24.91	6.63						
	2W voice unbundled Low Usage Line Port w/o Caller ID Capability			UEPRX	UEPRT	2.15	40.19	19.83	24.91	6.63						
	FEATURES															
	All Features Offered			UEPRX	UEPVF	1.98	0.00	0.00								
	NONRECURRING CHARGES (NRCs) - CURRENTLY COMBINED															
	2W VG Loop/Line Port Combination-Conversion-Switch-as-is			UEPRX	USAC2		0.10	0.10								
	2W VG Loop/Line Port Combination -Conversion-Switch with change			UEPRX	USACC		0.10	0.10								
	2W VG Loop/Line Port Platform-Installation Charge at QuickService location-Not Conversion of Existing Service			UEPRX	URECC		0.10									
	ADDITIONAL NRCs															
	2W VG Loop/Line Port Combination-Subsequent Activity			UEPRX	USAS2	0.00	0.00	0.00								
	Unbundled Misc Rate Element, Tag Loop at End User Premise			UEPRX	URETL		8.33	0.83								
	OFF/ON PREMISES EXTENSION CHANNELS															
	2W Analog VG Extension Loop – Non-Design		1	UEPRX	UEAEN	12.58	37.81	17.56	23.49	5.30						
	2W Analog VG Extension Loop – Non-Design		2	UEPRX	UEAEN	21.05	37.81	17.56	23.49	5.30						
	2W Analog VG Extension Loop – Non-Design		3	UEPRX	UEAEN	34.34	37.81	17.56	23.49	5.30						
	2W Analog VG Extension Loop – Design		1	UEPRX	UEAED	14.38	88.00	55.00	47.24	7.44						
	2W Analog VG Extension Loop – Design		2	UEPRX	UEAED	22.85	88.00	55.00	47.24	7.44						
	2W Analog VG Extension Loop – Design		3	UEPRX	UEAED	36.14	88.00	55.00	47.24	7.44						
	INTEROFFICE TRANSPORT															
	Interoffice Transport-Dedicated-2W VG-Facility Termination			UEPRX	U1TV2	21.13	40.54	27.41	16.74	6.90						
	Interoffice Transport-Dedicated-2W VG-Per Mile or Fraction Mile			UEPRX	U1TVM	0.008838	0.00	0.00								
	2-WIRE VOICE GRADE LOOP WITH 2-WIRE LINE PORT (BUS)															
	UNE Port/Loop Combination Rates															
	2W VG Loop/Port Combo-Zone 1					13.70										
	2W VG Loop/Port Combo-Zone 2					22.19										
	2W VG Loop/Port Combo-Zone 3					35.80										
	UNE Loop Rates															
	2W VG Loop (SL1)-Zone 1		1	UEPBX	UEPLX	11.55										
	2W VG Loop (SL1)-Zone 2		2	UEPBX	UEPLX	20.04										
	2W VG Loop (SL1)-Zone 3		3	UEPBX	UEPLX	33.65										
	2-Wire Voice Grade Line Port (Bus)															
	2W voice unbundled port w/o Caller ID-bus			UEPBX	UEPBL	2.15	40.19	19.83	24.91	6.63						
	2W voice unbundled port with Caller + E484 ID-bus			UEPBX	UEPBC	2.15	40.19	19.83	24.91	6.63						
	2W voice unbundled port outgoing only-bus			UEPBX	UEPBO	2.15	40.19	19.83	24.91	6.63						
	2W VG unbundled AL extended local dialing parity port with Caller ID-bus			UEPBX	UEPAW	2.15	40.19	19.83	24.91	6.63						
	2W voice unbundled incoming only port with Caller ID-Bus			UEPBX	UEPB1	2.15	40.19	19.83	24.91	6.63						
	2W Voice Unbundled AL Business Dialing Plan w/o Caller ID			UEPBX	UEPWB	2.15	40.19	19.83	24.91	6.63						
	2W voice unbundled Incoming Only Port w/o Caller ID Capability			UEPBX	UEPBE	2.15	40.19	19.83	24.91	6.63						
	FEATURES															
	All Features Offered			UEPBX	UEPVF	1.98	0.00	0.00								
	NONRECURRING CHARGES (NRCs) - CURRENTLY COMBINED															
	2W VG Loop/Line Port Combination-Conversion-Switch-as-is			UEPBX	USAC2		0.10	0.10								

UNBUNDLED NETWORK ELEMENTS - Alabama														Attachment: 2 Exh A			
CATEGORY	RATE ELEMENTS	Interim	Zone	BCS	USOC	RATES($)					Svc Order Submitted Elec per LSR	Svc Order Submitted Manually per LSR	Incremental Charge - Manual Svc Order vs. Electronic-1st	Incremental Charge - Manual Svc Order vs. Electronic-Add'l	Incremental Charge - Manual Svc Order vs. Electronic-Disc 1st	Incremental Charge - Manual Svc Order vs. Electronic-Disc Add'l
							Nonrecurring		NRC Disconnect		OSS Rates($)					
						Rec	First	Add'l	First	Add'l	SOMEC	SOMAN	SOMAN	SOMAN	SOMAN	SOMAN
	2W VG Loop/Line Port Combination -Conversion-Switch with change			UEPBX	USACC		0.10	0.10								
ADDITIONAL NRCs																
	2W VG Loop/Line Port Combination-Subsequent Activity			UEPBX	USAS2		0.00	0.00								
	Unbundled Misc Rate Element, Tag Loop at End User Premise			UEPBX	URETL		8.33	0.83								
OFF/ON PREMISES EXTENSION CHANNELS																
	2W Analog VG Extension Loop – Non-Design		1	UEPBX	UEAEN	12.58	37.81	17.56	23.49	5.30						
	2W Analog VG Extension Loop – Non-Design		2	UEPBX	UEAEN	21.05	37.81	17.56	23.49	5.30						
	2W Analog VG Extension Loop – Non-Design		3	UEPBX	UEAEN	34.34	37.81	17.56	23.49	5.30						
	2W Analog VG Extension Loop – Design		1	UEPBX	UEAED	14.38	88.00	55.00	47.24	7.44						
	2W Analog VG Extension Loop – Design		2	UEPBX	UEAED	22.85	88.00	55.00	47.24	7.44						
	2W Analog VG Extension Loop – Design		3	UEPBX	UEAED	36.14	88.00	55.00	47.24	7.44						
INTEROFFICE TRANSPORT																
	Interoffice Transport-Dedicated-2W VG-Facility Termination			UEPBX	U1TV2	21.13	40.54	27.41	16.74	6.90						
	Interoffice Transport-Dedicated-2W VG-Per Mile or Fraction Mile			UEPBX	U1TVM	0.008838	0.00	0.00								
2-WIRE VOICE GRADE LOOP WITH 2-WIRE LINE PORT (RES - PBX)																
UNE Port/Loop Combination Rates																
	2W VG Loop/Port Combo-Zone 1					13.70										
	2W VG Loop/Port Combo-Zone 2					22.19										
	2W VG Loop/Port Combo-Zone 3					35.80										
UNE Loop Rates																
	2W VG Loop (SL 1)-Zone 1		1	UEPRG	UEPLX	11.55										
	2W VG Loop (SL 1)-Zone 2		2	UEPRG	UEPLX	20.04										
	2W VG Loop (SL 1)-Zone 3		3	UEPRG	UEPLX	33.65										
2-Wire Voice Grade Line Port Rates (RES - PBX)																
	2W VG Unbundled Combination 2-Way PBX Trunk Port-Res			UEPRG	UEPRD	2.15	69.08	32.41	37.43	6.20						
FEATURES																
	All Features Offered			UEPRG	UEPVF	1.98	0.00	0.00								
NONRECURRING CHARGES (NRCs) - CURRENTLY COMBINED																
	2W VG Loop/ Line Port Combination (PBX)-Conversion-Switch-As-Is			UEPRG	USAC2		7.91	1.90								
	2W VG Loop/ Line Port Combination (PBX)-Conversion-Switch with Change			UEPRG	USACC		7.81	1.90								
ADDITIONAL NRCs																
	2W VG Loop/ Line Port Combination (PBX)-Subsequent Activity			UEPRG	USAS2	0.00	0.00	0.00								
	PBX Subsequent Activity-Change/Rearrange Multiline Hunt Group						7.32	7.32								
	Unbundled Misc Rate Element, Tag Loop at End User Premise			UEPRG	URETL		8.33	0.83								
OFF/ON PREMISES EXTENSION CHANNELS																
	Local Channel VG, per termination		1	UEPRG	P2JHX	14.38	88.00	55.00	47.24	7.44						
	Local Channel VG, per termination		2	UEPRG	P2JHX	22.85	88.00	55.00	47.24	7.44						
	Local Channel VG, per termination		3	UEPRG	P2JHX	36.14	88.00	55.00	47.24	7.44						
	Non-Wire Direct Serve Channel VG		1	UEPRG	SDD2X	22.41	131.60	61.92	90.50	13.40						
	Non-Wire Direct Serve Channel VG		2	UEPRG	SDD2X	23.88	131.60	61.92	90.50	13.40						
	Non-Wire Direct Serve Channel VG		3	UEPRG	SDD2X	33.72	131.60	61.92	90.50	13.40						
INTEROFFICE TRANSPORT																
	Interoffice Transport-Dedicated-2W VG-Facility Termination			UEPRG	U1TV2	21.13	40.54	27.41	16.74	6.90						
	Interoffice Transport-Dedicated-2W VG-Per Mile or Fraction Mile			UEPRG	U1TVM	0.008838	0.00	0.00								
2-WIRE VOICE GRADE LOOP WITH 2-WIRE LINE PORT (BUS - PBX)																
UNE Port/Loop Combination Rates																
	2W VG Loop/Port Combo-Zone 1					13.70										
	2W VG Loop/Port Combo-Zone 2					22.19										
	2W VG Loop/Port Combo-Zone 3					35.80										
UNE Loop Rates																
	2W VG Loop (SL 1)-Zone 1		1	UEPPX	UEPLX	11.55										
	2W VG Loop (SL 1)-Zone 2		2	UEPPX	UEPLX	20.04										
	2W VG Loop (SL 1)-Zone 3		3	UEPPX	UEPLX	33.65										
2-Wire Voice Grade Line Port Rates (BUS - PBX)																
	Line Side Unbundled Combination 2-Way PBX Trunk Port-Bus			UEPPX	UEPPC	2.15	69.08	32.41	37.43	6.20						
	Line Side Unbundled Outward PBX Trunk Port-Bus			UEPPX	UEPPO	2.15	69.08	32.41	37.43	6.20						
	Line Side Unbundled Incoming PBX Trunk Port-Bus			UEPPX	UEPP1	2.15	69.08	32.41	37.43	6.20						
	2W Voice Unbundled 2-Way Combination PBX AL Calling Port			UEPPX	UEPA2	2.15	69.08	32.41	37.43	6.20						

UNBUNDLED NETWORK ELEMENTS - Alabama														Attachment: 2 Exh A			
CATEGORY	RATE ELEMENTS	Interim	Zone	BCS	USOC	RATES($)					Svc Order Submitted Elec per LSR	Svc Order Submitted Manually per LSR	Incremental Charge - Manual Svc Order vs. Electronic-1st	Incremental Charge - Manual Svc Order vs. Electronic-Add'l	Incremental Charge - Manual Svc Order vs. Electronic-Disc 1st	Incremental Charge - Manual Svc Order vs. Electronic-Disc Add'l
							Nonrecurring		NRC Disconnect		OSS Rates($)					
						Rec	First	Add'l	First	Add'l	SOMEC	SOMAN	SOMAN	SOMAN	SOMAN	SOMAN
	2W Voice Unbundled PBX LD Terminal Ports			UEPPX	UEPLD	2.15	69.08	32.41	37.43	6.20						
	2W Voice Unbundled 2-Way Combination PBX Usage Port			UEPPX	UEPXA	2.15	69.08	32.41	37.43	6.20						
	2W Voice Unbundled PBX Toll Terminal Hotel Ports			UEPPX	UEPXB	2.15	69.08	32.41	37.43	6.20						
	2W Voice Unbundled PBX LD DDD Terminals Port			UEPPX	UEPXC	2.15	69.08	32.41	37.43	6.20						
	2W Voice Unbundled PBX LD Terminal Switchboard Port			UEPPX	UEPXD	2.15	69.08	32.41	37.43	6.20						
	2W Voice Unbundled PBX LD Terminal Switchboard IDD Capable Port			UEPPX	UEPXE	2.15	69.08	32.41	37.43	6.20						
	2W Voice Unbundled 2-Way PBX Hotel/Hospital Economy Administrative Calling Port			UEPPX	UEPXL	2.15	69.08	32.41	37.43	6.20						
	2W Voice Unbundled 2-Way PBX Hotel/Hospital Economy Rm Calling Port			UEPPX	UEPXM	2.15	69.08	32.41	37.43	6.20						
	2W Voice Unbundled 1-Way Outgoing PBX Hotel/Hospital Discount Rm Calling Port			UEPPX	UEPXO	2.15	69.08	32.41	37.43	6.20						
	2W Voice Unbundled 1-Way Outgoing PBX Measured Port			UEPPX	UEPXS	2.15	69.08	32.41	37.43	6.20						
FEATURES																
	All Features Offered			UEPPX	UEPVF	1.98	0.00	0.00								
NONRECURRING CHARGES (NRCs) - CURRENTLY COMBINED																
	2W VG Loop/ Line Port Combination (PBX)-Conversion-Switch-As-Is			UEPPX	USAC2		7.91	1.90								
	2W VG Loop/ Line Port Combination (PBX)-Conversion-Switch with Change			UEPPX	USACC		7.91	1.90								
ADDITIONAL NRCs																
	2W VG Loop/ Line Port Combination (PBX)-Subsequent Activity			UEPPX	USAS2	0.00	0.00	0.00								
	PBX Subsequent Activity-Change/Rearrange Multiline Hunt Group						7.32	7.32								
	Unbundled Misc Rate Element, Tag Loop at End User Premise			UEPPX	URETL		8.33	0.83								
OFF/ON PREMISES EXTENSION CHANNELS																
	Local Channel VG, per termination		1	UEPPX	P2JHX	14.38	88.00	55.00	47.24	7.44						
	Local Channel VG, per termination		2	UEPPX	P2JHX	22.85	88.00	55.00	47.24	7.44						
	Local Channel VG, per termination		3	UEPPX	P2JHX	36.14	88.00	55.00	47.24	7.44						
	Non-Wire Direct Serve Channel VG		1	UEPPX	SDD2X	22.41	131.60	61.92	90.50	13.40						
	Non-Wire Direct Serve Channel VG		2	UEPPX	SDD2X	23.88	131.60	61.92	90.50	13.40						
	Non-Wire Direct Serve Channel VG		3	UEPPX	SDD2X	33.72	131.60	61.92	90.50	13.40						
INTEROFFICE TRANSPORT																
	Interoffice Transport-Dedicated-2W VG-Facility Termination			UEPPX	U1TV2	21.13	40.54	27.41	16.74	6.90						
	Interoffice Transport-Dedicated-2W VG-Per Mile or Fraction Mile			UEPPX	U1TVM	0.008838	0.00	0.00								
2-WIRE VOICE GRADE LOOP WITH 2-WIRE ANALOG LINE COIN PORT																
UNE Port/Loop Combination Rates																
	2W VG Coin Port/Loop Combo – Zone 1					13.70										
	2W VG Coin Port/Loop Combo – Zone 2					22.19										
	2W VG Coin Port/Loop Combo – Zone 3					35.80										
UNE Loop Rates																
	2W VG Loop (SL1)-Zone 1		1	UEPCO	UEPLX	11.55										
	2W VG Loop (SL1)-Zone 2		2	UEPCO	UEPLX	20.04										
	2W VG Loop (SL1)-Zone 3		3	UEPCO	UEPLX	33.65										
2-Wire Voice Grade Line Ports (COIN)																
	2W Coin 2-Way w/o Operator Screening and w/o Blocking (AL, KY, LA, MS)			UEPCO	UEPRF	2.15	40.19	19.83	24.91	6.63						
	2W Coin 2-Way with Operator Screening (AL, KY)			UEPCO	UEPRE	2.15	40.19	19.83	24.91	6.63						
	2W Coin 2-Way with Operator Screening and Blocking: 011, 900/976, 1+DDD (AL, KY, LA, MS)			UEPCO	UEPRA	2.15	40.19	19.83	24.91	6.63						
	2W Coin 2-Way with Operator Screening and 011 Blocking (AL, LA, MS)			UEPCO	UEPRB	2.15	40.19	19.83	24.91	6.63						
	2W Coin 2-Way with Operator Screening & Blocking: 900/976, 1+DDD, 011+, & Local (AL, KY, LA, MS)			UEPCO	UEPCD	2.15	40.19	19.83	24.91	6.63						
	2W Coin Outward with Operator Screening and 011 Blocking (AL, FL)			UEPCO	UEPRK	2.15	40.19	19.83	24.91	6.63						
	2W Coin Outward with Operator Screening and Blocking: 011, 900/976, 1+DDD (AL, KY, LA, MS)			UEPCO	UEPRH	2.15	40.19	19.83	24.91	6.63						
	2W Coin Outward Operator Screening & Blocking: 900/976, 1+DDD, 011+, and Local (AL, KY, LA, MS)			UEPCO	UEPCN	2.15	40.19	19.83	24.91	6.63						
	2W 2-Way Smartline with 900/976 (all states except LA)			UEPCO	UEPCK	2.15	40.19	19.83	24.91	6.63						

CATEGORY	RATE ELEMENTS	Interim	Zone	BCS	USOC	RATES($)					Svc Order Submitted Elec per LSR	Svc Order Submitted Manually per LSR	Incremental Charge - Manual Svc Order vs. Electronic-1st	Incremental Charge - Manual Svc Order vs. Electronic-Add'l	Incremental Charge - Manual Svc Order vs. Electronic-Disc 1st	Incremental Charge - Manual Svc Order vs. Electronic-Disc Add'l
							Nonrecurring		NRC Disconnect		OSS Rates($)					
						Rec	First	Add'l	First	Add'l	SOMEC	SOMAN	SOMAN	SOMAN	SOMAN	SOMAN
	2W Coin Outward Smartline with 900/976 (all states except LA)			UEPCO	UEPCR	2.15	40.19	19.83	24.91	6.63						
ADDITIONAL UNE COIN PORT/LOOP (RC)																
	UNE Coin Port/Loop Combo Usage (Flat Rate)			UEPCO	URECU	1.56	0.00	0.00	0.00	0.00						
NONRECURRING CHARGES - CURRENTLY COMBINED																
	2W VG Loop/Line Port Combination -Conversion-Switch-as-is			UEPCO	USAC2		0.10	0.10								
	2W VG Loop/Line Port Combination -Conversion-Switch with change			UEPCO	USACC		0.10	0.10								
ADDITIONAL NRCs																
	2W VG Loop/Line Port Combination-Subsequent Activity			UEPCO	USAS2		0.00	0.00								
	Unbundled Misc Rate Element, Tag Loop at End User Premise			UEPCO	URETL		8.33	0.83								
2-WIRE VOICE LOOP/ 2WIRE VOICE GRADE IO TRANSPORT/ 2-WIRE LINE PORT (RES)																
UNE Port/Loop Combination Rates																
	2W VG Loop/IO Tranport/Port Combo-Zone 1					16.76										
	2W VG Loop/IO Tranport/Port Combo-Zone 2					25.23										
	2W VG Loop/IO Tranport/Port Combo-Zone 3					38.52										
UNE Loop Rates																
	2W VG Loop (SL2)-Zone 1		1	UEPFR	UECF2	14.38										
	2W VG Loop (SL2)-Zone 2		2	UEPFR	UECF2	22.85										
	2W VG Loop (SL2)-Zone 3		3	UEPFR	UECF2	36.14										
2-Wire Voice Grade Line Port Rates (Res)																
	2W voice unbundled port-residence			UEPFR	UEPRL	2.38	90.38	57.27	48.66	8.77						
	2W voice unbundled port with Caller ID-res			UEPFR	UEPRC	2.38	90.38	57.27	48.66	8.77						
	2W voice unbundled port outgoing only-res			UEPFR	UEPRO	2.38	90.38	57.27	48.66	8.77						
	2W VG unbundled AL extended local dialing parity port with Caller ID-res			UEPFR	UEPAR	2.38	90.38	57.27	48.66	8.77						
	2W voice unbundles res, low usage line port with Caller ID (LUM)			UEPFR	UEPAP	2.38	90.38	57.27	48.66	8.77						
	2W Voice Unbundled AL Residence Dialing Plan w/o Caller ID			UEPFR	UEPWA	2.38	90.38	57.27	48.66	8.77						
INTEROFFICE TRANSPORT																
	Interoffice Transport-Dedicated-2W VG-Facility Termination			UEPFR	U1TV2	21.13	40.54	27.41	16.74	6.90						
	Interoffice Transport-Dedicated-2W VG-Per Mile or Fraction Mile			UEPFR	1L5XX	0.008838										
FEATURES																
	All Features Offered			UEPFR	UEPVF	1.98	0.00	0.00								
NONRECURRING CHARGES (NRCs) - CURRENTLY COMBINED																
	2W Loop/Dedicated IO Transport/2W Line Port Combination-Conversion-Switch-as-is			UEPFR	USAC2		8.48	1.87								
	2W Loop/Dedicated IO Transport/2W Line Port Combination-Conversion-Switch-With-Change			UEPFR	USACC		8.48	1.87								
	Unbundled Misc Rate Element, Tag Designed Loop at End User Premise			UEPFR	URETN		11.21	1.10								
2-WIRE VOICE LOOP/ 2WIRE VOICE GRADE IO TRANSPORT/ 2-WIRE LINE PORT (BUS)																
UNE Port/Loop Combination Rates																
	2W VG Loop/IO Tranport/Port Combo-Zone 1					16.76										
	2W VG Loop/IO Tranport/Port Combo-Zone 2					25.23										
	2W VG Loop/IO Tranport/Port Combo-Zone 3					38.52										
UNE Loop Rates																
	2W VG Loop (SL2)-Zone 1		1	UEPFB	UECF2	14.38										
	2W VG Loop (SL2)-Zone 2		2	UEPFB	UECF2	22.85										
	2W VG Loop (SL2)-Zone 3		3	UEPFB	UECF2	36.14										
2-Wire Voice Grade Line Port (Bus)																
	2W voice unbundled port w/o Caller ID-bus			UEPFB	UEPBL	2.38	90.38	57.27	48.66	8.77						
	2W voice unbundled port with Caller + E484 ID-bus			UEPFB	UEPBC	2.38	90.38	57.27	48.66	8.77						
	2W voice unbundled port outgoing only-bus			UEPFB	UEPBO	2.38	90.38	57.27	48.66	8.77						
	2W VG unbundled AL extended local dialing parity port with Caller ID-bus			UEPFB	UEPAW	2.38	90.38	57.27	48.66	8.77						
	2W voice unbundled incoming only port with Caller ID-Bus			UEPFB	UEPB1	2.38	90.38	57.27	48.66	8.77						
	2W Voice Unbundled AL Business Dialing Plan w/o Caller ID			UEPFB	UEPWB	2.38	90.38	57.27	48.66	8.77						
INTEROFFICE TRANSPORT																
	Interoffice Transport-Dedicated-2W VG-Facility Termination			UEPFB	U1TV2	21.13	40.54	27.41	16.74	6.90						
	Interoffice Transport-Dedicated-2W VG-Per Mile or Fraction Mile			UEPFB	1L5XX	0.008838										
FEATURES																

CATEGORY	RATE ELEMENTS	Interim	Zone	BCS	USOC	RATES($)					Svc Order Submitted Elec per LSR	Svc Order Submitted Manually per LSR	Incremental Charge - Manual Svc Order vs. Electronic-1st	Incremental Charge - Manual Svc Order vs. Electronic-Add'l	Incremental Charge - Manual Svc Order vs. Electronic-Disc 1st	Incremental Charge - Manual Svc Order vs. Electronic-Disc Add'l
							Nonrecurring		NRC Disconnect		OSS Rates($)					
						Rec	First	Add'l	First	Add'l	SOMEC	SOMAN	SOMAN	SOMAN	SOMAN	SOMAN
	All Features Offered			UEPFB	UEPVF	1.98	0.00	0.00								
NONRECURRING CHARGES (NRCs) - CURRENTLY COMBINED																
	2W Loop/Dedicated IO Transport/2W Line Port Combination-Conversion-Switch-as-is			UEPFB	USAC2		8.48	1.87								
	2W Loop/Dedicated IO Transport/2W Line Port Combination-Conversion-Switch with change			UEPFB	USACC		8.48	1.87								
	Unbundled Misc Rate Element, Tag Designed Loop at End User Premise			UEPFB	URETN		11.21	1.10								
2-WIRE VOICE LOOP/ 2WIRE VOICE GRADE IO TRANSPORT/ 2-WIRE LINE PORT (PBX)																
UNE Port/Loop Combination Rates																
	2W VG Loop/IO Tranport/Port Combo-Zone 1					16.76										
	2W VG Loop/IO Tranport/Port Combo-Zone 2					25.23										
	2W VG Loop/IO Tranport/Port Combo-Zone 3					38.52										
UNE Loop Rates																
	2W VG Loop (SL2)-Zone 1		1	UEPFP	UECF2	14.38										
	2W VG Loop (SL2)-Zone 2		2	UEPFP	UECF2	22.85										
	2W VG Loop (SL2)-Zone 3		3	UEPFP	UECF2	36.14										
2-Wire Voice Grade Line Port Rates (BUS - PBX)																
	Line Side Unbundled Combination 2-Way PBX Trunk Port-Bus			UEPFP	UEPPC	2.38	119.27	69.85	61.18	8.34						
	Line Side Unbundled Outward PBX Trunk Port-Bus			UEPFP	UEPPO	2.38	119.27	69.85	61.18	8.34						
	Line Side Unbundled Incoming PBX Trunk Port-Bus			UEPFP	UEPP1	2.38	119.27	69.85	61.18	8.34						
	2W Voice Unbundled 2-Way Combination PBX AL Calling Port			UEPFP	UEPA2	2.38	119.27	69.85	61.18	8.34						
	2W Voice Unbundled PBX LD Terminal Ports			UEPFP	UEPLD	2.38	119.27	69.85	61.18	8.34						
	2W Voice Unbundled 2-Way Combination PBX Usage Port			UEPFP	UEPXA	2.38	119.27	69.85	61.18	8.34						
	2W Voice Unbundled PBX Toll Terminal Hotel Ports			UEPFP	UEPXB	2.38	119.27	69.85	61.18	8.34						
	2W Voice Unbundled PBX LD DDD Terminals Port			UEPFP	UEPXC	2.38	119.27	69.85	61.18	8.34						
	2W Voice Unbundled PBX LD Terminal Switchboard Port			UEPFP	UEPXD	2.38	119.27	69.85	61.18	8.34						
	2W Voice Unbundled PBX LD Terminal Switchboard IDD Capable Port			UEPFP	UEPXE	2.38	119.27	69.85	61.18	8.34						
	2W Voice Unbundled 2-Way PBX Hotel/Hospital Economy Administrative Calling Port			UEPFP	UEPXL	2.38	119.27	69.85	61.18	8.34						
	2W Voice Unbundled 2-Way PBX Hotel/Hospital Economy Rm Calling Port			UEPFP	UEPXM	2.38	119.27	69.85	61.18	8.34						
	2W Voice Unbundled 1-Way Outgoing PBX Hotel/Hospital Discount Rm Calling Port			UEPFP	UEPXO	2.38	119.27	69.85	61.18	8.34						
	2W Voice Unbundled 1-Way Outgoing PBX Measured Port			UEPFP	UEPXS	2.38	119.27	69.85	61.18	8.34						
INTEROFFICE TRANSPORT																
	Interoffice Transport-Dedicated-2W VG-Facility Termination			UEPFP	U1TV2	21.13	40.54	27.41	16.74	6.90						
	Interoffice Transport-Dedicated-2W VG-Per Mile or Fraction Mile			UEPFP	1L5XX	0.008838										
FEATURES																
	All Features Offered			UEPFP	UEPVF	1.98	0.00	0.00								
NONRECURRING CHARGES (NRCs) - CURRENTLY COMBINED																
	2W Loop/Dedicated IO Transport/2W Line Port Combination-Conversion-Switch-as-is			UEPFP	USAC2		8.48	1.87								
	2W Loop/Dedicated IO Transport/2W Line Port Combination-Conversion-Switch with change			UEPFP	USACC		8.48	1.87								
	Unbundled Misc Rate Element, Tag Designed Loop at End User Premise			UEPFP	URETN		11.21	1.10								
2-WIRE VOICE GRADE LOOP- BUS ONLY - WITH 2-WIRE DID TRUNK PORT																
UNE Port/Loop Combination Rates																
	2W VG Loop/2W DID Trunk Port Combo-UNE Zone 1					23.40										
	2W VG Loop/2W DID Trunk Port Combo-UNE Zone 2					31.88										
	2W VG Loop/2W DID Trunk Port Combo-UNE Zone 3					45.17										
UNE Loop Rates																
	2W Analog VG Loop- (SL2)-UNE Zone 1		1	UEPPX	UECD1	14.38										
	2W Analog VG Loop- (SL2)-UNE Zone 2		2	UEPPX	UECD1	22.85										
	2W Analog VG Loop- (SL2)-UNE Zone 3		3	UEPPX	UECD1	36.14										
UNE Port Rate																
	Exchange Ports-2W DID Port			UEPPX	UEPD1	9.02	207.31	73.74	107.14	11.20						
NONRECURRING CHARGES - CURRENTLY COMBINED																

UNBUNDLED NETWORK ELEMENTS - Alabama														Attachment: 2 Exh A			
CATEGORY	RATE ELEMENTS	Interim	Zone	BCS	USOC	RATES($)					Svc Order Submitted Elec per LSR	Svc Order Submitted Manually per LSR	Incremental Charge - Manual Svc Order vs. Electronic-1st	Incremental Charge - Manual Svc Order vs. Electronic-Add'l	Incremental Charge - Manual Svc Order vs. Electronic-Disc 1st	Incremental Charge - Manual Svc Order vs. Electronic-Disc Add'l
							Nonrecurring		NRC Disconnect		OSS Rates($)					
						Rec	First	Add'l	First	Add'l	SOMEC	SOMAN	SOMAN	SOMAN	SOMAN	SOMAN
	2W VG Loop/2W DID Trunk Port Combination -Switch-as-is			UEPPX	USAC1		7.31	1.87								
	2W VG Loop/2W DID Trunk Port Conversion with BellSouth Allowable Changes			UEPPX	USA1C		7.31	1.87								
ADDITIONAL NRCs																
	2W DID Subsequent Activity-Add Trunks, Per Trunk			UEPPX	USAS1		26.78	26.78								
	Unbundled Misc Rate Element, Tag Designed Loop at End User Premise			UEPPX	URETN		11.21	1.10								
Telephone Number/Trunk Group Establisment Charges																
	DID Trunk Termination (One Per Port)			UEPPX	NDT	0.00	0.00	0.00								
	Additional DID Numbers for each Group of 20 DID Numbers			UEPPX	ND4	0.00	0.00	0.00								
	DID Numbers, Non- consecutive DID Numbers , Per Number			UEPPX	ND5	0.00	0.00	0.00								
	Reserve Non-Consecutive DID numbers			UEPPX	ND6	0.00	0.00	0.00								
	Reserve DID Numbers			UEPPX	NDV	0.00	0.00	0.00								
2-WIRE ISDN DIGITAL GRADE LOOP WITH 2-WIRE ISDN DIGITAL LINE SIDE PORT																
UNE Port/Loop Combination Rates																
	2W ISDN Digital Grade Loop/2W ISDN Digital Line Side Port -UNE Zone 1					28.28										
	2W ISDN Digital Grade Loop/2W ISDN Digital Line Side Port -UNE Zone 2					38.86										
	2W ISDN Digital Grade Loop/2W ISDN Digital Line Side Port -UNE Zone 3					53.84										
UNE Loop Rates																
	2W ISDN Digital Grade Loop-UNE Zone 1		1	UEPPB UEPPR	USL2X	19.03										
	2W ISDN Digital Grade Loop-UNE Zone 2		2	UEPPB UEPPR	USL2X	29.62										
	2W ISDN Digital Grade Loop-UNE Zone 3		3	UEPPB UEPPR	USL2X	45.60										
UNE Port Rate																
	Exchange Port-2W ISDN Line Side Port			UEPPR	UEPPR	9.24	190.01	132.76	100.67	21.28						
	Exchange Port-2W ISDN Line Side Port			UEPPB	UEPPB	9.24	190.01	132.76	100.67	21.28						
NONRECURRING CHARGES - CURRENTLY COMBINED																
	2W ISDN Digital Grade Loop/2W ISDN Line Side Port Combination-Conversion			UEPPB UEPPR	USACB	0.00	38.51	27.02								
ADDITIONAL NRCs																
	Unbundled Misc Rate Element, Tag Designed Loop at End User Premise			UEPPB UEPPR	URETN		11.21	1.10								
	Unbundled Misc Rate Element, Tag Loop at End User Premise			UEPPB UEPPR	URETL		8.33	0.83								
B-CHANNEL USER PROFILE ACCESS:																
	CVS/CSD (DMS/5ESS)			UEPPB UEPPR	U1UCA	0.00	0.00	0.00								
	CVS (EWSD)			UEPPB UEPPR	U1UCB	0.00	0.00	0.00								
	CSD			UEPPB UEPPR	U1UCC	0.00	0.00	0.00								
B-CHANNEL AREA PLUS USER PROFILE ACCESS: (AL,KY,LA,MS SC,MS, & TN)																
	CVS/CSD (DMS/5ESS)			UEPPB UEPPR	U1UCD	0.00	0.00	0.00								
	CVS (EWSD)			UEPPB UEPPR	U1UCE	0.00	0.00	0.00								
	CSD			UEPPB UEPPR	U1UCF	0.00	0.00	0.00								
USER TERMINAL PROFILE																
	User Terminal Profile (EWSD only)			UEPPB UEPPR	U1UMA	0.00	0.00	0.00								
VERTICAL FEATURES																
	All Vertical Features-One per Channel B User Profile			UEPPB UEPPR	UEPVF	1.98	0.00	0.00								
INTEROFFICE CHANNEL MILEAGE																
	Interoffice Channel mileage each, including first mile and facilities termination			UEPPB UEPPR	M1GNC	21.13	40.54	27.41	16.74	6.90						
	Interoffice Channel mileage each, additional mile			UEPPB UEPPR	M1GNM	0.008838	0.00	0.00								
UNBUNDLED CENTREX PORT/LOOP COMBINATIONS - COST BASED RATES																
UNE-P CENTREX - 1AESS - (Valid in AL,FL,GA,KY,LA,MS,&TN only)																
2-Wire VG Loop/2-Wire Voice Grade Port (Centrex) Combo																
UNE Port/Loop Combination Rates (Non-Design)																
	2W VG Loop/2W VG Port (Centrex) Port Combo-Non-Design					13.70										
	2W VG Loop/2W VG Port (Centrex)Port Combo-Non-Design					22.19										
	2W VG Loop/2W VG Port (Centrex)Port Combo-Non-Design					35.80										
UNE Port/Loop Combination Rates (Design)																

UNBUNDLED NETWORK ELEMENTS - Alabama														Attachment: 2 Exh A			
CATEGORY		RATE ELEMENTS	Interim	Zone	BCS	USOC	RATES($)					Svc Order Submitted Elec per LSR	Svc Order Submitted Manually per LSR	Incremental Charge - Manual Svc Order vs. Electronic-1st	Incremental Charge - Manual Svc Order vs. Electronic-Add'l	Incremental Charge - Manual Svc Order vs. Electronic-Disc 1st	Incremental Charge - Manual Svc Order vs. Electronic-Disc Add'l
								Nonrecurring		NRC Disconnect		OSS Rates($)					
							Rec	First	Add'l	First	Add'l	SOMEC	SOMAN	SOMAN	SOMAN	SOMAN	SOMAN
		2W VG Loop/2W VG Port (Centrex) Port Combo-Design					16.53										
		2W VG Loop/2W VG Port (Centrex)Port Combo-Design					25.00										
		2W VG Loop/2W VG Port (Centrex)Port Combo-Design					38.29										
	UNE Loop Rate																
		2W VG Loop (SL 1)-Zone 1		1	UEP91	UECS1	11.55										
		2W VG Loop (SL 1)-Zone 2		2	UEP91	UECS1	20.04										
		2W VG Loop (SL 1)-Zone 3		3	UEP91	UECS1	33.65										
		2W VG Loop (SL 2)-Zone 1		1	UEP91	UECS2	14.38										
		2W VG Loop (SL 2)-Zone 2		2	UEP91	UECS2	22.85										
		2W VG Loop (SL 2)-Zone 3		3	UEP91	UECS2	36.14										
	UNE Ports																
	All States (Except North Carolina and Sout Carolina)																
		2W VG Port (Centrex) Basic Local Area			UEP91	UEPYA	2.15	40.19	19.83	24.91	6.63						
		2W VG Port (Centrex 800 termination)Basic Local Area			UEP91	UEPYB	2.15	40.19	19.83	24.91	6.63						
		2W VG Port (Centrex with Caller ID)Note1 Basic Local Area			UEP91	UEPYH	2.15	40.19	19.83	24.91	6.63						
		2W VG Port (Centrex from diff SWC) Note 2, 3 Basic Local Area			UEP91	UEPYM	2.15	90.38	57.27	48.66	8.77						
		2W VG Port, Diff SWC-800 Service Term-Basic Local Area			UEP91	UEPYZ	2.15	90.38	57.27	48.66	8.77						
		2W VG Port terminated in on Megalink or equivalent-Basic Local Area			UEP91	UEPY9	2.15	40.19	19.83	24.91	6.63						
		2W VG Port Terminated on 800 Service Term-Basic Local Area			UEP91	UEPY2	2.15	40.19	19.83	24.91	6.63						
	AL, KY, LA, MS, & TN Only																
		2W VG Port (Centrex)			UEP91	UEPQA	2.15	40.19	19.83	24.91	6.63						
		2W VG Port (Centrex 800 termination)			UEP91	UEPQB	2.15	40.19	19.83	24.91	6.63						
		2W VG Port (Centrex with Caller ID)1			UEP91	UEPQH	2.15	40.19	19.83	24.91	6.63						
		2W VG Port (Centrex from diff SWC)2,3			UEP91	UEPQM	2.15	90.38	57.27	48.66	8.77						
		2W VG Port, Diff SWC-2,3-800 Service Term			UEP91	UEPQZ	2.15	90.38	57.27	48.66	8.77						
		2W VG Port terminated in on Megalink or equivalent			UEP91	UEPQ9	2.15	40.19	19.83	24.91	6.63						
		2W VG Port Terminated on 800 Service Term			UEP91	UEPQ2	2.15	40.19	19.83	24.91	6.63						
	Local Switching																
		Centrex Intercom Funtionality, per port			UEP91	URECS	0.5488										
	Features																
		All Standard Features Offered, per port			UEP91	UEPVF	1.98										
		All Select Features Offered, per port			UEP91	UEPVS	0.00	405.52									
		All Centrex Control Features Offered, per port			UEP91	UEPVC	1.98										
	NARS																
		Unbundled Network Access Register-Combination			UEP91	UARCX	0.00	0.00	0.00	0.00	0.00						
		Unbundled Network Access Register-Indial			UEP91	UAR1X	0.00	0.00	0.00	0.00	0.00						
		Unbundled Network Access Register-Outdial			UEP91	UAROX	0.00	0.00	0.00	0.00	0.00						
	Misc Terminations																
	2-Wire Trunk Side																
		Trunk Side Terminations, each			UEP91	CENA6	8.05	119.31	18.74	59.90	3.76						
	Interoffice Channel Mileage - 2-Wire																
		Interoffice Channel Facilities Termination-VG			UEP91	M1GBC	21.13	40.54	27.41	16.74	6.90						
		Interoffice Channel mileage, per mile or fraction of mile			UEP91	M1GBM	0.008838										
	Feature Activations (DS0) Centrex Loops on Channelized DS1 Service																
	D4 Channel Bank Feature Activations																
		Feature Activation on D-4 Channel Bank Centrex Loop Slot			UEP91	1PQWS	0.56										
		Feature Activation on D-4 Channel Bank FX line Side Loop Slot			UEP91	1PQW6	0.56										
		Feature Activation on D-4 Channel Bank FX Trunk Side Loop Slot			UEP91	1PQW7	0.56										
		Feature Activation on D-4 Channel Bank Centrex Loop Slot-Different			UEP91	1PQWP	0.56										
		Feature Activation on D-4 Channel Bank Private Line Loop Slot			UEP91	1PQWV	0.56										
		Feature Activation on D-4 Channel Bank Tjie Line/Trunk Loop Slot			UEP91	1PQWQ	0.56										
		Feature Activation on D-4 Channel Bank WATS Loop Slot			UEP91	1PQWA	0.56										
	Non-Recurring Charges (NRC) Associated with UNE-P Centrex																
		Conversion-Currently Combined Switch-As-Is with allowed changes, per port			UEP91	USAC2		0.10	0.10								
		Conversion of Existing Centrex Common Block			UEP91	USACN		37.75	16.58								
		New Centrex Standard Common Block			UEP91	M1ACS	0.00	667.21									
		New Centrex Customized Common Block			UEP91	M1ACC	0.00	667.21									
		Secondary Block, per Block			UEP91	M2CC1	0.00	78.02									

UNBUNDLED NETWORK ELEMENTS - Alabama														Attachment: 2 Exh A			
CATEGORY	RATE ELEMENTS	Interim	Zone	BCS	USOC	RATES($)					Svc Order Submitted Elec per LSR	Svc Order Submitted Manually per LSR	Incremental Charge - Manual Svc Order vs. Electronic-1st	Incremental Charge - Manual Svc Order vs. Electronic-Add'l	Incremental Charge - Manual Svc Order vs. Electronic-Disc 1st	Incremental Charge - Manual Svc Order vs. Electronic-Disc Add'l
							Nonrecurring		NRC Disconnect		OSS Rates($)					
						Rec	First	Add'l	First	Add'l	SOMEC	SOMAN	SOMAN	SOMAN	SOMAN	SOMAN
	NAR Establishment Charge, Per Occasion			UEP91	URECA	0.00	72.73									
Additional Non-Recurring Charges (NRC)																
	Unbundled Misc Rate Element, Tag Loop at End Use Premise			UEP91	URETL		8.33	0.83								
	Unbundled Misc Rate Element, Tag Design Loop at End Use Premise			UEP91	URETN		11.21	1.10								
UNE-P CENTREX - 5ESS (Valid in All States)																
2-Wire VG Loop/2-Wire Voice Grade Port (Centrex) Combo																
UNE Port/Loop Combination Rates (Non-Design)																
	2W VG Loop/2W VG Port (Centrex) Port Combo-Non-Design					13.70										
	2W VG Loop/2W VG Port (Centrex)Port Combo-Non-Design					22.19										
	2W VG Loop/2W VG Port (Centrex)Port Combo-Non-Design					35.80										
UNE Port/Loop Combination Rates (Design)																
	2W VG Loop/2W VG Port (Centrex) Port Combo-Design					16.53										
	2W VG Loop/2W VG Port (Centrex)Port Combo-Design					25.00										
	2W VG Loop/2W VG Port (Centrex)Port Combo-Design					38.29										
UNE Loop Rate																
	2W VG Loop (SL 1)-Zone 1		1	UEP95	UECS1	11.55										
	2W VG Loop (SL 1)-Zone 2		2	UEP95	UECS1	20.04										
	2W VG Loop (SL 1)-Zone 3		3	UEP95	UECS1	33.65										
	2W VG Loop (SL 2)-Zone 1		1	UEP95	UECS2	14.38										
	2W VG Loop (SL 2)-Zone 2		2	UEP95	UECS2	22.85										
	2W VG Loop (SL 2)-Zone 3		3	UEP95	UECS2	36.14										
UNE Port Rate																
All States																
	2W VG Port (Centrex) Basic Local Area			UEP95	UEPYA	2.15	40.19	19.83	24.91	6.63						
	2W VG Port (Centrex 800 termination)			UEP95	UEPYB	2.15	40.19	19.83	24.91	6.63						
	2W VG Port (Centrex with Caller ID)1Basic Local Area			UEP95	UEPYH	2.15	40.19	19.83	24.91	6.63						
	2W VG Port (Centrex from diff SWC)2,3 Basic Local Area			UEP95	UEPYM	2.15	90.38	57.27	48.66	8.77						
	2W VG Port, Diff SWC 2,3-800 Service Term-Basic Local Area			UEP95	UEPYZ	2.15	90.38	57.27	48.66	8.77						
	2W VG Port terminated in on Megalink or equivalent-Basic Local Area			UEP95	UEPY9	2.15	40.19	19.83	24.91	6.63						
	2W VG Port Terminated on 800 Service Term-Basic Local Area			UEP95	UEPY2	2.15	40.19	19.83	24.91	6.63						
AL, KY, LA, MS, SC, & TN Only																
	2W VG Port (Centrex)			UEP95	UEPQA	2.15	40.19	19.83	24.91	6.63						
	2W VG Port (Centrex 800 termination)			UEP95	UEPQB	2.15	40.19	19.83	24.91	6.63						
	2W VG Port (Centrex with Caller ID)1			UEP95	UEPQH	2.15	40.19	19.83	24.91	6.63						
	2W VG Port (Centrex from diff SWC)2,3			UEP95	UEPQM	2.15	90.38	57.27	48.66	8.77						
	2W VG Port, Diff SWC-800 Service Term 2,3			UEP95	UEPQZ	2.15	90.38	57.27	48.66	8.77						
	2W VG Port terminated in on Megalink or equivalent			UEP95	UEPQ9	2.15	40.19	19.83	24.91	6.63						
	2W VG Port Terminated on 800 Service Term			UEP95	UEPQ2	2.15	40.19	19.83	24.91	6.63						
Local Switching																
	Centrex Intercom Funtionality, per port			UEP95	URECS	0.5488										
Features																
	All Standard Features Offered, per port			UEP95	UEPVF	1.98										
	All Select Features Offered, per port			UEP95	UEPVS	0.00	405.52									
	All Centrex Control Features Offered, per port			UEP95	UEPVC	1.98										
NARS																
	Unbundled Network Access Register-Combination			UEP95	UARCX	0.00	0.00	0.00	0.00	0.00						
	Unbundled Network Access Register-Indial			UEP95	UAR1X	0.00	0.00	0.00	0.00	0.00						
	Unbundled Network Access Register-Outdial			UEP95	UAROX	0.00	0.00	0.00	0.00	0.00						
Misc Terminations																
2-Wire Trunk Side																
	Trunk Side Terminations, each			UEP95	CEND6	8.05	119.31	18.74	59.90	3.76						
4-Wire Digital (1.544 Megabits)																
	DS1 Circuit Terminations, each			UEP95	M1HD1	60.09	202.02	95.69	72.59	2.46						
	DS0 Channels Activated, each			UEP95	M1HDO	0.00	14.48									
Interoffice Channel Mileage - 2-Wire																
	Interoffice Channel Facilities Termination			UEP95	M1GBC	21.13	40.54	27.41	16.74	6.90						
	Interoffice Channel mileage, per mile or fraction of mile			UEP95	M1GBM	0.008838										
Feature Activations (DS0) Centrex Loops on Channelized DS1 Service																

CATEGORY	RATE ELEMENTS	Interim	Zone	BCS	USOC	RATES($)					Svc Order Submitted Elec per LSR	Svc Order Submitted Manually per LSR	Incremental Charge - Manual Svc Order vs. Electronic-1st	Incremental Charge - Manual Svc Order vs. Electronic-Add'l	Incremental Charge - Manual Svc Order vs. Electronic-Disc 1st	Incremental Charge - Manual Svc Order vs. Electronic-Disc Add'l
							Nonrecurring		NRC Disconnect		OSS Rates($)					
						Rec	First	Add'l	First	Add'l	SOMEC	SOMAN	SOMAN	SOMAN	SOMAN	SOMAN
	D4 Channel Bank Feature Activations															
	Feature Activation on D-4 Channel Bank Centrex Loop Slot			UEP95	1PQWS	0.56										
	Feature Activation on D-4 Channel Bank FX line Side Loop Slot			UEP95	1PQW6	0.56										
	Feature Activation on D-4 Channel Bank FX Trunk Side Loop Slot			UEP95	1PQW7	0.56										
	Feature Activation on D-4 Channel Bank Centrex Loop Slot-Different			UEP95	1PQWP	0.56										
	Feature Activation on D-4 Channel Bank Private Line Loop Slot			UEP95	1PQWV	0.56										
	Feature Activation on D-4 Channel Bank Tjie Line/Trunk Loop Slot			UEP95	1PQWQ	0.56										
	Feature Activation on D-4 Channel Bank WATS Loop Slot			UEP95	1PQWA	0.56										
	Non-Recurring Charges (NRC) Associated with UNE-P Centrex															
	NRC Conversion Currently Combined Switch-As-Is with allowed changes, per port			UEP95	USAC2		0.10	0.10								
	Conversion of Existing Centrex Common Block, each			UEP95	USACN		37.75	16.58								
	New Centrex Standard Common Block			UEP95	M1ACS	0.00	667.21									
	New Centrex Customized Common Block			UEP95	M1ACC	0.00	667.21									
	NAR Establishment Charge, Per Occasion			UEP95	URECA	0.00	72.73									
	Additional Non-Recurring Charges (NRC)															
	Unbundled Misc Rate Element, Tag Loop at End Use Premise			UEP95	URETL		8.33	0.83								
	Unbundled Misc Rate Element, Tag Design Loop at End Use Premise			UEP95	URETN		11.21	1.10								
	UNE-P CENTREX - DMS100 (Valid in All States)															
	2-Wire VG Loop/2-Wire Voice Grade Port (Centrex) Combo															
	UNE Port/Loop Combination Rates (Non-Design)															
	2W VG Loop/2W VG Port (Centrex) Port Combo-Non-Design					13.70										
	2W VG Loop/2W VG Port (Centrex)Port Combo-Non-Design					22.19										
	2W VG Loop/2W VG Port (Centrex)Port Combo-Non-Design					35.80										
	UNE Port/Loop Combination Rates (Design)															
	2W VG Loop/2W VG Port (Centrex) Port Combo-Design					16.53										
	2W VG Loop/2W VG Port (Centrex)Port Combo-Design					25.00										
	2W VG Loop/2W VG Port (Centrex)Port Combo-Design					38.29										
	UNE Loop Rate															
	2W VG Loop (SL 1)-Zone 1		1	UEP9D	UECS1	11.55										
	2W VG Loop (SL 1)-Zone 2		2	UEP9D	UECS1	20.04										
	2W VG Loop (SL 1)-Zone 3		3	UEP9D	UECS1	33.65										
	2W VG Loop (SL 2)-Zone 1		1	UEP9D	UECS2	14.38										
	2W VG Loop (SL 2)-Zone 2		2	UEP9D	UECS2	22.85										
	2W VG Loop (SL 2)-Zone 3		3	UEP9D	UECS2	36.14										
	UNE Port Rate															
	ALL STATES															
	2W VG Port (Centrex) Basic Local Area			UEP9D	UEPYA	2.15	40.19	19.83	24.91	6.63						
	2W VG Port (Centrex 800 termination)Basic Local Area			UEP9D	UEPYB	2.15	40.19	19.83	24.91	6.63						
	2W VG Port (Centrex/EBS-PSET)3Basic Local Area			UEP9D	UEPYC	2.15	40.19	19.83	24.91	6.63						
	2W VG Port (Centrex /EBS-M5009)3Basic Local Area			UEP9D	UEPYD	2.15	40.19	19.83	24.91	6.63						
	2W VG Port (Centrex /EBS-M5209))3 Basic Local Area			UEP9D	UEPYE	2.15	40.19	19.83	24.91	6.63						
	2W VG Port (Centrex /EBS-M5112))3 Basic Local Area			UEP9D	UEPYF	2.15	40.19	19.83	24.91	6.63						
	2W VG Port (Centrex /EBS-M5312))3Basic Local Area			UEP9D	UEPYG	2.15	40.19	19.83	24.91	6.63						
	2W VG Port (Centrex /EBS-M5008))3 Basic Local Area			UEP9D	UEPYT	2.15	40.19	19.83	24.91	6.63						
	2W VG Port (Centrex/EBS-M5208))3 Basic Local Area			UEP9D	UEPYU	2.15	40.19	19.83	24.91	6.63						
	2W VG Port (Centrex/EBS-M5216))3 Basic Local Area			UEP9D	UEPYV	2.15	40.19	19.83	24.91	6.63						
	2W VG Port (Centrex/EBS-M5316))3 Basic Local Area			UEP9D	UEPY3	2.15	40.19	19.83	24.91	6.63						
	2W VG Port (Centrex with Caller ID) Basic Local Area			UEP9D	UEPYH	2.15	40.19	19.83	24.91	6.63						
	2W VG Port (Centrex/Caller ID/Msg Wtg Lamp Indication))4 Basic Local Area			UEP9D	UEPYW	2.15	40.19	19.83	24.91	6.63						
	2W VG Port (Centrex/Msg Wtg Lamp Indication))4 Basic Local Area			UEP9D	UEPYJ	2.15	40.19	19.83	24.91	6.63						
	2W VG Port (Centrex from diff SWC) 2,3-Basic Local Area			UEP9D	UEPYM	2.15	90.38	57.27	48.66	8.77						
	2W VG Port (Centrex/differ SWC /EBS-PSET)2,3,4 Basic Local Area			UEP9D	UEPYO	2.15	90.38	57.27	48.66	8.77						
	2W VG Port (Centrex/differ SWC /EBS-M5009)2,3,4 Basic Local Area			UEP9D	UEPYP	2.15	90.38	57.27	48.66	8.77						
	2W VG Port (Centrex/differ SWC /EBS-5209)2,3,4 Basic Local Area			UEP9D	UEPYQ	2.15	90.38	57.27	48.66	8.77						
	2W VG Port (Centrex/differ SWC /EBS-M5112)2,3,4 Basic Local Area			UEP9D	UEPYR	2.15	90.38	57.27	48.66	8.77						
	2W VG Port (Centrex/differ SWC /EBS-M5312)2,3,4 Basic Local Area			UEP9D	UEPYS	2.15	90.38	57.27	48.66	8.77						

UNBUNDLED NETWORK ELEMENTS - Alabama														Attachment: 2 Exh A			
CATEGORY		RATE ELEMENTS	Interim	Zone	BCS	USOC	RATES($)					Svc Order Submitted Elec per LSR	Svc Order Submitted Manually per LSR	Incremental Charge - Manual Svc Order vs. Electronic-1st	Incremental Charge - Manual Svc Order vs. Electronic-Add'l	Incremental Charge - Manual Svc Order vs. Electronic-Disc 1st	Incremental Charge - Manual Svc Order vs. Electronic-Disc Add'l
								Nonrecurring		NRC Disconnect		OSS Rates($)					
							Rec	First	Add'l	First	Add'l	SOMEC	SOMAN	SOMAN	SOMAN	SOMAN	SOMAN
		2W VG Port (Centrex/differ SWC /EBS-M5008)2,3,4 Basic Local Area			UEP9D	UEPY4	2.15	90.38	57.27	48.66	8.77						
		2W VG Port (Centrex/differ SWC /EBS-M5208)2, 3 Basic Local Area			UEP9D	UEPY5	2.15	90.38	57.27	48.66	8.77						
		2W VG Port (Centrex/differ SWC /EBS-M5216)2,3,4 Basic Local Area			UEP9D	UEPY6	2.15	90.38	57.27	48.66	8.77						
		2W VG Port (Centrex/differ SWC /EBS-M5316)2,3,4 Basic Local Area			UEP9D	UEPY7	2.15	90.38	57.27	48.66	8.77						
		2W VG Port, Diff SWC-800 Service Term 2,3			UEP9D	UEPYZ	2.15	90.38	57.27	48.66	8.77						
		2W VG Port terminated in on Megalink or equivalent Basic Local Area			UEP9D	UEPY9	2.15	40.19	19.83	24.91	6.63						
		2W VG Port Terminated on 800 Service Term Basic Local Area			UEP9D	UEPY2	2.15	40.19	19.83	24.91	6.63						
	AL, KY, LA, MS, SC, & TN Only																
		2W VG Port (Centrex)			UEP9D	UEPQA	2.15	40.19	19.83	24.91	6.63						
		2W VG Port (Centrex 800 termination)			UEP9D	UEPQB	2.15	40.19	19.83	24.91	6.63						
		2W VG Port (Centrex/EBS-PSET)4			UEP9D	UEPQC	2.15	40.19	19.83	24.91	6.63						
		2W VG Port (Centrex /EBS-M5009)4			UEP9D	UEPQD	2.15	40.19	19.83	24.91	6.63						
		2W VG Port (Centrex /EBS-M5209)4			UEP9D	UEPQE	2.15	40.19	19.83	24.91	6.63						
		2W VG Port (Centrex /EBS-M5112)4			UEP9D	UEPQF	2.15	40.19	19.83	24.91	6.63						
		2W VG Port (Centrex /EBS-M5312)4			UEP9D	UEPQG	2.15	40.19	19.83	24.91	6.63						
		2W VG Port (Centrex /EBS-M5008)4			UEP9D	UEPQT	2.15	40.19	19.83	24.91	6.63						
		2W VG Port (Centrex/EBS-M5208)4			UEP9D	UEPQU	2.15	40.19	19.83	24.91	6.63						
		2W VG Port (Centrex/EBS-M5216)4			UEP9D	UEPQV	2.15	40.19	19.83	24.91	6.63						
		2W VG Port (Centrex/EBS-M5316)4			UEP9D	UEPQ3	2.15	40.19	19.83	24.91	6.63						
		2W VG Port (Centrex with Caller ID)			UEP9D	UEPQH	2.15	40.19	19.83	24.91	6.63						
		2W VG Port (Centrex/Caller ID/Msg Wtg Lamp Indication)4			UEP9D	UEPQW	2.15	40.19	19.83	24.91	6.63						
		2W VG Port (Centrex/Msg Wtg Lamp Indication)4			UEP9D	UEPQJ	2.15	40.19	19.83	24.91	6.63						
		2W VG Port (Centrex from diff SWC) 2,3			UEP9D	UEPQM	2.15	90.38	57.27	48.66	8.77						
		2W VG Port (Centrex/differ SWC /EBS-PSET)2,3,4			UEP9D	UEPQO	2.15	90.38	57.27	48.66	8.77						
		2W VG Port (Centrex/differ SWC /EBS-M5009)2,3,4			UEP9D	UEPQP	2.15	90.38	57.27	48.66	8.77						
		2W VG Port (Centrex/differ SWC /EBS-5209)2,3,4			UEP9D	UEPQQ	2.15	90.38	57.27	48.66	8.77						
		2W VG Port (Centrex/differ SWC /EBS-M5112)2,3,4			UEP9D	UEPQR	2.15	90.38	57.27	48.66	8.77						
		2W VG Port (Centrex/differ SWC /EBS-M5312)2,3,4			UEP9D	UEPQS	2.15	90.38	57.27	48.66	8.77						
		2W VG Port (Centrex/differ SWC /EBS-M5008)2,3,4			UEP9D	UEPQ4	2.15	90.38	57.27	48.66	8.77						
		2W VG Port (Centrex/differ SWC /EBS-M5208)2,3,4			UEP9D	UEPQ5	2.15	90.38	57.27	48.66	8.77						
		2W VG Port (Centrex/differ SWC /EBS-M5216)2,3,4			UEP9D	UEPQ6	2.15	90.38	57.27	48.66	8.77						
		2W VG Port (Centrex/differ SWC /EBS-M5316)2,3,4			UEP9D	UEPQ7	2.15	90.38	57.27	48.66	8.77						
		2W VG Port, Diff SWC-800 Service Term 2,3			UEP9D	UEPQZ	2.15	90.38	57.27	48.66	8.77						
		2W VG Port terminated in on Megalink or equivalent			UEP9D	UEPQ9	2.15	40.19	19.83	24.91	6.63						
		2W VG Port Terminated on 800 Service Term			UEP9D	UEPQ2	2.15	40.19	19.83	24.91	6.63						
	Local Switching																
		Centrex Intercom Funtionality, per port			UEP9D	URECS	0.5488										
	Features																
		All Standard Features Offered, per port			UEP9D	UEPVF	1.98										
		All Select Features Offered, per port			UEP9D	UEPVS	0.00	405.52									
		All Centrex Control Features Offered, per port			UEP9D	UEPVC	1.98										
	NARS																
		Unbundled Network Access Register-Combination			UEP9D	UARCX	0.00	0.00	0.00	0.00	0.00						
		Unbundled Network Access Register-Inward			UEP9D	UAR1X	0.00	0.00	0.00	0.00	0.00						
		Unbundled Network Access Register-Outdial			UEP9D	UAROX	0.00	0.00	0.00	0.00	0.00						
	Misc Terminations																
	2-Wire Trunk Side																
		Trunk Side Terminations, each			UEP9D	CEND6	8.05	119.31	18.74	59.90	3.76						
	4-Wire Digital (1.544 Megabits)																
		DS1 Circuit Terminations, each			UEP9D	M1HD1	60.09	202.02	95.69	72.59	2.46						
		DS0 Channels Activiated per Channel			UEP9D	M1HDO	0.00	14.48									
	Interoffice Channel Mileage - 2-Wire																
		Interoffice Channel Facilities Termination			UEP9D	M1GBC	21.13	40.54	27.41	16.74	6.90						
		Interoffice Channel mileage, per mile or fraction of mile			UEP9D	M1GBM	0.008838										
	Feature Activations (DS0) Centrex Loops on Channelized DS1 Service																
	D4 Channel Bank Feature Activations																
		Feature Activation on D-4 Channel Bank Centrex Loop Slot			UEP9D	1PQWS	0.56										
		Feature Activation on D-4 Channel Bank FX line Side Loop Slot			UEP9D	1PQW6	0.56										
		Feature Activation on D-4 Channel Bank FX Trunk Side Loop Slot			UEP9D	1PQW7	0.56										

CATEGORY	RATE ELEMENTS	Interim	Zone	BCS	USOC	RATES($)					Svc Order Submitted Elec per LSR	Svc Order Submitted Manually per LSR	Incremental Charge - Manual Svc Order vs. Electronic-1st	Incremental Charge - Manual Svc Order vs. Electronic-Add'l	Incremental Charge - Manual Svc Order vs. Electronic-Disc 1st	Incremental Charge - Manual Svc Order vs. Electronic-Disc Add'l
							Nonrecurring		NRC Disconnect		OSS Rates($)					
						Rec	First	Add'l	First	Add'l	SOMEC	SOMAN	SOMAN	SOMAN	SOMAN	SOMAN
	Feature Activation on D-4 Channel Bank Centrex Loop Slot-Different			UEP9D	1PQWP	0.56										
	Feature Activation on D-4 Channel Bank Private Line Loop Slot			UEP9D	1PQWV	0.56										
	Feature Activation on D-4 Channel Bank Tjie Line/Trunk Loop Slot			UEP9D	1PQWQ	0.56										
	Feature Activation on D-4 Channel Bank WATS Loop Slot			UEP9D	1PQWA	0.56										
Non-Recurring Charges (NRC) Associated with UNE-P Centrex																
	NRC Conversion Currently Combined Switch-As-Is with allowed changes, per port			UEP9D	USAC2		0.10	0.10								
	Conversion of existing Centrex Common Block, each			UEP9D	USACN		37.75	16.58								
	New Centrex Standard Common Block			UEP9D	M1ACS	0.00	667.21									
	New Centrex Customized Common Block			UEP9D	M1ACC	0.00	667.21									
	NAR Establishment Charge, Per Occasion			UEP9D	URECA	0.00	72.73									
Additional Non-Recurring Charges (NRC)																
	Unbundled Misc Rate Element, Tag Loop at End Use Premise			UEP9D	URETL		8.33	0.83								
	Unbundled Misc Rate Element, Tag Design Loop at End Use Premise			UEP9D	URETN		11.21	1.10								
UNE-P CENTREX - EWSD (Valid in AL, FL, KY, LA, MS & TN)																
2-Wire VG Loop/2-Wire Voice Grade Port (Centrex) Combo																
UNE Port/Loop Combination Rates (Non-Design)																
	2W VG Loop/2W VG Port (Centrex) Port Combo-Non-Design					13.70										
	2W VG Loop/2W VG Port (Centrex)Port Combo-Non-Design					22.19										
	2W VG Loop/2W VG Port (Centrex)Port Combo-Non-Design					35.80										
UNE Port/Loop Combination Rates (Design)																
	2W VG Loop/2W VG Port (Centrex) Port Combo-Design					16.53										
	2W VG Loop/2W VG Port (Centrex)Port Combo-Design					25.00										
	2W VG Loop/2W VG Port (Centrex)Port Combo-Design					38.29										
UNE Loop Rate																
	2W VG Loop (SL 1)-Zone 1		1	UEP9E	UECS1	11.55										
	2W VG Loop (SL 1)-Zone 2		2	UEP9E	UECS1	20.04										
	2W VG Loop (SL 1)-Zone 3		3	UEP9E	UECS1	33.65										
	2W VG Loop (SL 2)-Zone 1		1	UEP9E	UECS2	14.38										
	2W VG Loop (SL 2)-Zone 2		2	UEP9E	UECS2	22.85										
	2W VG Loop (SL 2)-Zone 3		3	UEP9E	UECS2	36.14										
UNE Port Rate																
AL, FL, KY, LA, MS, & TN only																
	2W VG Port (Centrex) Basic Local Area			UEP9E	UEPYA	2.15	40.19	19.83	24.91	6.63						
	2W VG Port (Centrex 800 termination)Basic Local Area			UEP9E	UEPYB	2.15	40.19	19.83	24.91	6.63						
	2W VG Port (Centrex with Caller ID)1Basic Local Area			UEP9E	UEPYH	2.15	40.19	19.83	24.91	6.63						
	2W VG Port (Centrex from diff SWC)2,3 Basic Local Area			UEP9E	UEPYM	2.15	90.38	57.27	48.66	8.77						
	2W VG Port, Diff SWC 2,3-800 Service Term-Basic Local Area			UEP9E	UEPYZ	2.15	90.38	57.27	48.66	8.77						
	2W VG Port terminated in on Megalink or equivalent-Basic Local Area			UEP9E	UEPY9	2.15	40.19	19.83	24.91	6.63						
	2W VG Port Terminated on 800 Service Term-Basic Local Area			UEP9E	UEPY2	2.15	40.19	19.83	24.91	6.63						
AL, KY, LA, MS, & TN Only																
	2W VG Port (Centrex)			UEP9E	UEPQA	2.15	40.19	19.83	24.91	6.63						
	2W VG Port (Centrex 800 termination)			UEP9E	UEPQB	2.15	40.19	19.83	24.91	6.63						
	2W VG Port (Centrex with Caller ID)1			UEP9E	UEPQH	2.15	40.19	19.83	24.91	6.63						
	2W VG Port (Centrex from diff SWC)2,3			UEP9E	UEPQM	2.15	90.38	57.27	48.66	8.77						
	2W VG Port, Diff SWC 2,3 -800 Service Term			UEP9E	UEPQZ	2.15	90.38	57.27	48.66	8.77						
	2W VG Port terminated in on Megalink or equivalent			UEP9E	UEPQ9	2.15	40.19	19.83	24.91	6.63						
	2W VG Port Terminated on 800 Service Term			UEP9E	UEPQ2	2.15	40.19	19.83	24.91	6.63						
Local Switching																
	Centrex Intercom Funtionality, per port			UEP9E	URECS	0.5488										
Features																
	All Standard Features Offered, per port			UEP9E	UEPVF	1.98										
	All Select Features Offered, per port			UEP9E	UEPVS	0.00	405.52									
	All Centrex Control Features Offered, per port			UEP9E	UEPVC	1.98										
NARS																
	Unbundled Network Access Register-Combination			UEP9E	UARCX	0.00	0.00	0.00	0.00	0.00						
	Unbundled Network Access Register-Indial			UEP9E	UAR1X	0.00	0.00	0.00	0.00	0.00						
	Unbundled Network Access Register-Outdial			UEP9E	UAROX	0.00	0.00	0.00	0.00	0.00						

CATEGORY	RATE ELEMENTS	Interim	Zone	BCS	USOC	RATES($)					Svc Order Submitted Elec per LSR	Svc Order Submitted Manually per LSR	Incremental Charge - Manual Svc Order vs. Electronic-1st	Incremental Charge - Manual Svc Order vs. Electronic-Add'l	Incremental Charge - Manual Svc Order vs. Electronic-Disc 1st	Incremental Charge - Manual Svc Order vs. Electronic-Disc Add'l
							Nonrecurring		NRC Disconnect		OSS Rates($)					
						Rec	First	Add'l	First	Add'l	SOMEC	SOMAN	SOMAN	SOMAN	SOMAN	SOMAN
Misc Terminations																
2-Wire Trunk Side																
	Trunk Side Terminations, each			UEP9E	CEND6	8.05	119.31	18.74	59.90	3.76						
4-Wire Digital (1.544 Megabits)																
	DS1 Circuit Terminations, each			UEP9E	M1HD1	60.09	202.02	95.69	72.59	2.46						
	DS0 Channel Activated Per Channel			UEP9E	M1HDO	0.00	14.48									
Interoffice Channel Mileage - 2-Wire																
	Interoffice Channel Facilities Termination			UEP9E	M1GBC	21.13	40.54	27.41	16.74	6.90						
	Interoffice Channel mileage, per mile or fraction of mile			UEP9E	M1GBM	0.008838										
Feature Activations (DS0) Centrex Loops on Channelized DS1 Service																
D4 Channel Bank Feature Activations																
	Feature Activation on D-4 Channel Bank Centrex Loop Slot			UEP9E	1PQWS	0.56										
	Feature Activation on D-4 Channel Bank FX line Side Loop Slot			UEP9E	1PQW6	0.56										
	Feature Activation on D-4 Channel Bank FX Trunk Side Loop Slot			UEP9E	1PQW7	0.56										
	Feature Activation on D-4 Channel Bank Centrex Loop Slot-Different			UEP9E	1PQWP	0.56										
	Feature Activation on D-4 Channel Bank Private Line Loop Slot			UEP9E	1PQWV	0.56										
	Feature Activation on D-4 Channel Bank Tjie Line/Trunk Loop Slot			UEP9E	1PQWQ	0.56										
	Feature Activation on D-4 Channel Bank WATS Loop Slot			UEP9E	1PQWA	0.56										
Non-Recurring Charges (NRC) Associated with UNE-P Centrex																
	NRC Conversion Currently Combined Switch-As-Is with allowed changes, per port			UEP9E	USAC2		0.10	0.10								
	Conversion of Existing Centrex Common Block, each			UEP9E	USACN		37.75	16.58								
	New Centrex Standard Common Block			UEP9E	M1ACS	0.00	667.21									
	New Centrex Customized Common Block			UEP9E	M1ACC	0.00	667.21									
	NAR Establishment Charge, Per Occasion			UEP9E	URECA	0.00	72.73									
Additional Non-Recurring Charges (NRC)																
	Unbundled Misc Rate Element, Tag Loop at End Use Premise			UEP9E	URETL		8.33	0.83								
	Unbundled Misc Rate Element, Tag Design Loop at End Use Premise			UEP9E	URETN		11.21	1.10								
UNE-P CENTREX - DCO - Valid in AL, KY, LA, MS, & TN)																
2-Wire VG Loop/2-Wire Voice Grade Port (Centrex) Combo																
UNE Port/Loop Combination Rates (Non-Design)																
	2W VG Loop/2W VG Port (Centrex) Port Combo-Non-Design					13.70										
	2W VG Loop/2W VG Port (Centrex)Port Combo-Non-Design					22.19										
	2W VG Loop/2W VG Port (Centrex)Port Combo-Non-Design					35.80										
UNE Port/Loop Combination Rates (Design)																
	2W VG Loop/2W VG Port (Centrex) Port Combo-Design					16.53										
	2W VG Loop/2W VG Port (Centrex)Port Combo-Design					25.00										
	2W VG Loop/2W VG Port (Centrex)Port Combo-Design					38.29										
UNE Loop Rate																
	2W VG Loop (SL 1)-Zone 1		1	UEP93	UECS1	11.55										
	2W VG Loop (SL 1)-Zone 2		2	UEP93	UECS1	20.04										
	2W VG Loop (SL 1)-Zone 3		3	UEP93	UECS1	33.65										
	2W VG Loop (SL 2)-Zone 1		1	UEP93	UECS2	14.38										
	2W VG Loop (SL 2)-Zone 2		2	UEP93	UECS2	22.85										
	2W VG Loop (SL 2)-Zone 3		3	UEP93	UECS2	36.14										
UNE Port Rate																
AL, KY, LA, MS, & TN only																
	2W VG Port (Centrex) Basic Local Area			UEP93	UEPYA	2.15	40.19	19.83	24.91	6.63						
	2W VG Port (Centrex 800 termination)Basic Local Area			UEP93	UEPYB	2.15	40.19	19.83	24.91	6.63						
	2W VG Port (Centrex with Caller ID)1Basic Local Area			UEP93	UEPYH	2.15	40.19	19.83	24.91	6.63						
	2W VG Port (Centrex from diff SWC)2,3 Basic Local Area			UEP93	UEPYM	2.15	90.38	57.27	48.66	8.77						
	2W VG Port, Diff SWC-2,3-800 Service Term-Basic Local Area			UEP93	UEPYZ	2.15	90.38	57.27	48.66	8.77						
	2W VG Port terminated in on Megalink or equivalent-Basic Local Area			UEP93	UEPY9	2.15	40.19	19.83	24.91	6.63						
	2W VG Port Terminated on 800 Service Term-Basic Local Area			UEP93	UEPY2	2.15	40.19	19.83	24.91	6.63						
	2W VG Port (Centrex)			UEP93	UEPQA	2.15	40.19	19.83	24.91	6.63						
	2W VG Port (Centrex 800 termination)			UEP93	UEPQB	2.15	40.19	19.83	24.91	6.63						
	2W VG Port (Centrex with Caller ID)1			UEP93	UEPQH	2.15	40.19	19.83	24.91	6.63						
	2W VG Port (Centrex from diff SWC)2,3			UEP93	UEPQM	2.15	90.38	57.27	48.66	8.77						

UNBUNDLED NETWORK ELEMENTS - Alabama														Attachment: 2 Exh A			
CATEGORY	RATE ELEMENTS	Interim	Zone	BCS	USOC	RATES($)					Svc Order Submitted Elec per LSR	Svc Order Submitted Manually per LSR	Incremental Charge - Manual Svc Order vs. Electronic-1st	Incremental Charge - Manual Svc Order vs. Electronic-Add'l	Incremental Charge - Manual Svc Order vs. Electronic-Disc 1st	Incremental Charge - Manual Svc Order vs. Electronic-Disc Add'l
							Nonrecurring		NRC Disconnect		OSS Rates($)					
						Rec	First	Add'l	First	Add'l	SOMEC	SOMAN	SOMAN	SOMAN	SOMAN	SOMAN
	2W VG Port, Diff SWC-2,3 -800 Service Term			UEP93	UEPQZ	2.15	90.38	57.27	48.66	8.77						
	2W VG Port terminated in on Megalink or equivalent			UEP93	UEPQ9	2.15	40.19	19.83	24.91	6.63						
	2W VG Port Terminated on 800 Service Term			UEP93	UEPQ2	2.15	40.19	19.83	24.91	6.63						
Local Switching																
	Centrex Intercom Funtionality, per port			UEP93	URECS	0.5488										
Features																
	All Standard Features Offered, per port			UEP93	UEPVF	1.98										
	All Centrex Control Features Offered, per port			UEP93	UEPVC	1.98										
NARS																
	Unbundled Network Access Register-Combination			UEP93	UARCX	0.00	0.00	0.00	0.00	0.00						
	Unbundled Network Access Register-Indial			UEP93	UAR1X	0.00	0.00	0.00	0.00	0.00						
	Unbundled Network Access Register-Outdial			UEP93	UAROX	0.00	0.00	0.00	0.00	0.00						
Misc Terminations																
2-Wire Trunk Side																
	Trunk Side Terminations, each			UEP93	CEND6	8.05	119.31	18.74	59.90	3.76						
4-Wire Digital (1.544 Megabits)																
	DS1 Circuit Terminations, each			UEP93	M1HD1	60.09	202.02	95.69	72.59	2.46						
	DS0 Channels Activated, Per Channel			UEP93	M1HDO	0.00	14.48									
Interoffice Channel Mileage - 2-Wire																
	Interoffice Channel Facilities Termination			UEP93	M1GBC	21.13	40.54	27.41	16.74	6.90						
	Interoffice Channel mileage, per mile or fraction of mile			UEP93	M1GBM	0.008838										
Feature Activations (DS0) Centrex Loops on Channelized DS1 Service																
D4 Channel Bank Feature Activations																
	Feature Activation on D-4 Channel Bank Centrex Loop Slot			UEP93	1PQWS	0.56										
	Feature Activation on D-4 Channel Bank FX Line Side Loop Slot			UEP93	1PQW6	0.56										
	Feature Activation on D-4 Channel Bank FX Trunk Side Loop Slot			UEP93	1PQW7	0.56										
	Feature Activation on D-4 Channel Bank Centrex Loop Slot-Different			UEP93	1PQWP	0.56										
	Feature Activation on D-4 Channel Bank Private Line Loop Slot			UEP93	1PQWV	0.56										
	Feature Activation on D-4 Channel Bank Tie Line/Trunk Loop Slot			UEP93	1PQWQ	0.56										
	Feature Activation on D-4 Channel Bank WATS Loop Slot			UEP93	1PQWA	0.56										
Non-Recurring Charges (NRC) Associated with UNE-P Centrex																
	NRC Conversion Currently Combined Switch-As-Is with allowed changes, per port			UEP93	USAC2		0.10	0.10								
	Conversion of Existing Centrex Common Block, each			UEP93	USACN		37.75	16.58								
	New Centrex Standard Common Block			UEP93	M1ACS	0.00	667.21									
	New Centrex Customized Common Block			UEP93	M1ACC	0.00	667.21									
	NAR Establishment Charge, Per Occasion			UEP93	URECA	0.00	72.73									
Additional Non-Recurring Charges (NRC)																
	Unbundled Misc Rate Element, Tag Loop at End Use Premise			UEP93	URETL		8.33	0.83								
	Unbundled Misc Rate Element, Tag Design Loop at End Use Premise			UEP93	URETN		11.21	1.10								
Note 1 - Required Port for Centrex Control in 1AESS, 5ESS & EWSD																
Note 2 - Requres Interoffice Channel Mileage																
Note 3 - Installation is combination of Installation charge for SL2 Loop and Port																
Note 4 - Requires Specific Customer Premises Equipment																
Note: Rates displaying an "I" in Interim column are interim as a result of a Commission order.																

UNBUNDLED NETWORK ELEMENTS - Florida														Attachment: 2 Exh A			
CATEGORY		RATE ELEMENTS	Interim	Zone	BCS	USOC	RATES($)					Svc Order Submitted Elec per LSR	Svc Order Submitted Manually per LSR	Incremental Charge - Manual Svc Order vs. Electronic-1st	Incremental Charge - Manual Svc Order vs. Electronic-Add'l	Incremental Charge - Manual Svc Order vs. Electronic-Disc 1st	Incremental Charge - Manual Svc Order vs. Electronic-Disc Add'l
								Nonrecurring		NRC Disconnect		OSS Rates($)					
							Rec	First	Add'l	First	Add'l	SOMEC	SOMAN	SOMAN	SOMAN	SOMAN	SOMAN
	The "Zone" shown in the sections for stand-alone loops or loops as part of a combination refers to Geographically Deaveraged UNE Zones. To view Geographically Deaveraged UNE Zone Designations by Central Office, refer to internet Website: http://www.interconnection.bellsouth.com/become_a_clec/html/interconnection.htm																
OPERATIONS SUPPORT SYSTEMS (OSS) - "REGIONAL RATES"																	
	NOTE: (1) CLEC should contact its contract negotiator if it prefers the "state specific" OSS charges as ordered by the State Commissions. The OSS charges currently contained in this rate exhibit are the BellSouth "regional" service ordering charges. CLEC may elect either the state specific Commission ordered rates for the service ordering charges, or CLEC may elect the regional service ordering charge, however, CLEC can not obtain a mixture of the two regardless if CLEC has a interconnection contract																
	NOTE: (2) Any element that can be ordered electronically will be billed according to the SOMEC rate listed in this category. Please refer to BellSouth's Local Ordering Handbook (LOH) to determine if a product can be ordered electronically. For those elements that cannot be ordered electronically at present per the LOH, the listed SOMEC rate in this category reflects the charge that would be billed to a CLEC once electronic ordering capabilities come on-line for that element. Otherwise, the manual																
		OSS-Electronic Service Order Charge, Per Local Service Request (LSR)-UNE Only				SOMEC		3.50	0.00	3.50	0.00						
		OSS-Manual Service Order Charge, Per Local Service Request (LSR)-UNE Only				SOMAN		11.90	0.00	1.83	0.00						
UNE SERVICE DATE ADVANCEMENT CHARGE																	
	NOTE: The Expedite charge will be maintained commensurate with BellSouth's FCC No.1 Tariff, Section 5 as applicable.																
		UNE Expedite Charge per Circuit or Line Assignable USOC, per Day			UAL, UEANL, UCL, UEF, UDF, UEQ, UDL, UENTW, UDN, UEA, UHL, ULC, USL, U1T12, U1T48, U1TD1, U1TD3, U1TDX, U1TO3, U1TS1, U1TVX, UC1BC, UC1BL, UC1CC, UC1CL, UC1DC, UC1DL, UC1EC, UC1EL, UC1FC, UC1FL, UC1GC, UC1GL, UC1HC, UC1HL, UDL12, UDL48, UDLO3, UDLSX, UE3, ULD12, ULD48, ULDD1, ULDD3, ULDDX, ULDO3, ULDS1, ULDVX, UNC1X, UNC3X, UNCDX, UNCNX, UNCSX, UNCVX, UNLD1, UNLD3, UXTD1, UXTD3, UXTS1, U1TUC, U1TUD, U1TUB, U1TUA,NTCVG, NTCUD, NTCD1	SDASP		200.00									
ORDER MODIFICATION CHARGE																	
		Order Modification Charge (OMC)						26.21	0.00	0.00	0.00						
		Order Modification Additional Dispatch Charge (OMCAD)						150.00	0.00	0.00	0.00						
UNBUNDLED EXCHANGE ACCESS LOOP																	
	2-WIRE ANALOG VOICE GRADE LOOP																
		2W Analog VG Loop- SL2 w/Loop or Ground Start Signaling-Zone 1		1	UEA	UEAL2	12.24	135.75	82.47	63.53	12.01						
		2W Analog VG Loop- SL2 w/Loop or Ground Start Signaling-Zone 2		2	UEA	UEAL2	17.40	135.75	82.47	63.53	12.01						
		2W Analog VG Loop- SL2 w/Loop or Ground Start Signaling-Zone 3		3	UEA	UEAL2	30.87	135.75	82.47	63.53	12.01						
		2W Analog VG Loop- SL2 w/Reverse Battery Signaling-Zone 1		1	UEA	UEAR2	12.24	135.75	82.47	63.53	12.01						
		2W Analog VG Loop- SL2 w/Reverse Battery Signaling-Zone 2		2	UEA	UEAR2	17.40	135.75	82.47	63.53	12.01						
		2W Analog VG Loop- SL2 w/Reverse Battery Signaling-Zone 3		3	UEA	UEAR2	30.87	135.75	82.47	63.53	12.01						
		Switch-As-Is Conversion rate per UNE Loop, Single LSR, (per DS0)			UEA	URESL		8.98	8.98								
		Switch-As-Is Conversion rate per UNE Loop, Spreadsheet, (per DS0)			UEA	URESP		8.98	8.98								
		CLEC to CLEC Conversion Charge w/o outside dispatch			UEA	UREWO		87.71	36.35								

CATEGORY	RATE ELEMENTS	Interim	Zone	BCS	USOC	RATES($)					Svc Order Submitted Elec per LSR	Svc Order Submitted Manually per LSR	Incremental Charge - Manual Svc Order vs. Electronic-1st	Incremental Charge - Manual Svc Order vs. Electronic-Add'l	Incremental Charge - Manual Svc Order vs. Electronic-Disc 1st	Incremental Charge - Manual Svc Order vs. Electronic-Disc Add'l
							Nonrecurring		NRC Disconnect		OSS Rates($)					
						Rec	First	Add'l	First	Add'l	SOMEC	SOMAN	SOMAN	SOMAN	SOMAN	SOMAN
	Loop Tagging-SL2 (SL2)			UEA	URETL		11.21	1.10								
4-WIRE ANALOG VOICE GRADE LOOP																
	4W Analog VG Loop-Zone 1		1	UEA	UEAL4	18.89	167.86	115.15	67.08	15.56						
	4W Analog VG Loop-Zone 2		2	UEA	UEAL4	26.84	167.86	115.15	67.08	15.56						
	4W Analog VG Loop-Zone 3		3	UEA	UEAL4	47.62	167.86	115.15	67.08	15.56						
	Switch-As-Is Conversion rate per UNE Loop, Single LSR, (per DS0)			UEA	URESL		8.98	8.98								
	Switch-As-Is Conversion rate per UNE Loop, Spreadsheet, (per DS0)			UEA	URESP		8.98	8.98								
	CLEC to CLEC Conversion Charge w/o outside dispatch			UEA	UREWO		87.71	36.35								
2-WIRE ISDN DIGITAL GRADE LOOP																
	2W ISDN Digital Grade Loop-Zone 1		1	UDN	U1L2X	19.28	147.69	94.41	62.23	10.71						
	2W ISDN Digital Grade Loop-Zone 2		2	UDN	U1L2X	27.40	147.69	94.41	62.23	10.71						
	2W ISDN Digital Grade Loop-Zone 3		3	UDN	U1L2X	48.62	147.69	94.41	62.23	10.71						
	CLEC to CLEC Conversion Charge w/o outside dispatch			UDN	UREWO		91.61	44.15								
2-WIRE ASYMMETRICAL DIGITAL SUBSCRIBER LINE (ADSL) COMPATIBLE LOOP																
	2W Unbundled ADSL Loop including manual service inquiry & facility reservation-Zone 1		1	UAL	UAL2X	8.30	149.53	103.85	75.05	15.63						
	2W Unbundled ADSL Loop including manual service inquiry & facility reservation-Zone 2		2	UAL	UAL2X	11.80	149.53	103.85	75.05	15.63						
	2W Unbundled ADSL Loop including manual service inquiry & facility reservation-Zone 3		3	UAL	UAL2X	20.94	149.53	103.85	75.05	15.63						
	2W Unbundled ADSL Loop w/o manual service inquiry & facility reservaton-Zone 1		1	UAL	UAL2W	8.30	124.83	71.12	60.64	9.12						
	2W Unbundled ADSL Loop w/o manual service inquiry & facility reservaton-Zone 2		2	UAL	UAL2W	11.80	124.83	71.12	60.64	9.12						
	2W Unbundled ADSL Loop w/o manual service inquiry & facility reservaton-Zone 3		3	UAL	UAL2W	20.94	124.83	71.12	60.64	9.12						
	CLEC to CLEC Conversion Charge w/o outside dispatch			UAL	UREWO		86.19	40.39								
2-WIRE HIGH BIT RATE DIGITAL SUBSCRIBER LINE (HDSL) COMPATIBLE LOOP																
	2W Unbundled HDSL Loop including manual service inquiry & facility reservation-Zone 1		1	UHL	UHL2X	7.22	159.09	113.41	75.05	15.63						
	2W Unbundled HDSL Loop including manual service inquiry & facility reservation-Zone 2		2	UHL	UHL2X	10.26	159.09	113.41	75.05	15.63						
	2W Unbundled HDSL Loop including manual service inquiry & facility reservation-Zone 3		3	UHL	UHL2X	18.21	159.09	113.41	75.05	15.63						
	2W Unbundled HDSL Loop w/o manual service inquiry and facility reservation-Zone 1		1	UHL	UHL2W	7.22	134.40	80.69	60.64	9.12						
	2W Unbundled HDSL Loop w/o manual service inquiry and facility reservation-Zone 2		2	UHL	UHL2W	10.26	134.40	80.69	60.64	9.12						
	2W Unbundled HDSL Loop w/o manual service inquiry and facility reservation-Zone 3		3	UHL	UHL2W	18.21	134.40	80.69	60.64	9.12						
	CLEC to CLEC Conversion Charge w/o outside dispatch			UHL	UREWO		86.12	40.39								
4-WIRE HIGH BIT RATE DIGITAL SUBSCRIBER LINE (HDSL) COMPATIBLE LOOP																
	4 Wire Unbundled HDSL Loop including manual service inquiry and facility reservation-Zone 1		1	UHL	UHL4X	10.86	193.31	138.98	77.15	12.61						
	4W Unbundled HDSL Loop including manual service inquiry and facility reservation-Zone 2		2	UHL	UHL4X	15.44	193.31	138.98	77.15	12.61						
	4W Unbundled HDSL Loop including manual service inquiry and facility reservation-Zone 3		3	UHL	UHL4X	27.39	193.31	138.98	77.15	12.61						
	4W Unbundled HDSL Loop w/o manual service inquiry and facility reservation-Zone 1		1	UHL	UHL4W	10.86	168.62	115.47	62.74	11.22						
	4W Unbundled HDSL Loop w/o manual service inquiry and facility reservation-Zone 2		2	UHL	UHL4W	15.44	168.62	115.47	62.74	11.22						
	4W Unbundled HDSL Loop w/o manual service inquiry and facility reservation-Zone 3		3	UHL	UHL4W	27.39	168.62	115.47	62.74	11.22						
	CLEC to CLEC Conversion Charge w/o outside dispatch			UHL	UREWO		86.12	40.39								
4-WIRE DS1 DIGITAL LOOP																
	4W DS1 Digital Loop-Zone 1		1	USL	USLXX	70.74	313.75	181.48	61.22	13.53						
	4W DS1 Digital Loop-Zone 2		2	USL	USLXX	100.54	313.75	181.48	61.22	13.53						
	4W DS1 Digital Loop-Zone 3		3	USL	USLXX	178.39	313.75	181.48	61.22	13.53						

UNBUNDLED NETWORK ELEMENTS - Florida														Attachment: 2 Exh A			
CATEGORY		RATE ELEMENTS	Interim	Zone	BCS	USOC	RATES($)					Svc Order Submitted Elec per LSR	Svc Order Submitted Manually per LSR	Incremental Charge - Manual Svc Order vs. Electronic-1st	Incremental Charge - Manual Svc Order vs. Electronic-Add'l	Incremental Charge - Manual Svc Order vs. Electronic-Disc 1st	Incremental Charge - Manual Svc Order vs. Electronic-Disc Add'l
								Nonrecurring		NRC Disconnect		OSS Rates($)					
							Rec	First	Add'l	First	Add'l	SOMEC	SOMAN	SOMAN	SOMAN	SOMAN	SOMAN
		Switch-As-Is Conversion rate per UNE Loop, Single LSR, (per DS1)			USL	URESL		8.98	8.98								
		Switch-As-Is Conversion rate per UNE Loop, Spreadsheet, (per DS1)			USL	URESP		8.98	8.98								
		CLEC to CLEC Conversion Charge w/o outside dispatch			USL	UREWO		101.07	43.04								
	4-WIRE 19.2, 56 OR 64 KBPS DIGITAL GRADE LOOP																
		4 Wire Unbundled Digital Loop 2.4 Kbps-Zone 1		1	UDL	UDL2X	22.20	161.56	108.85	67.08	15.56						
		4 Wire Unbundled Digital Loop 2.4 Kbps-Zone 2		2	UDL	UDL2X	31.56	161.56	108.85	67.08	15.56						
		4 Wire Unbundled Digital Loop 2.4 Kbps-Zone 3		3	UDL	UDL2X	55.99	161.56	108.85	67.08	15.56						
		4 Wire Unbundled Digital Loop 4.8 Kbps-Zone 1		1	UDL	UDL4X	22.20	161.56	108.85	67.08	15.56						
		4 Wire Unbundled Digital Loop 4.8 Kbps-Zone 2		2	UDL	UDL4X	31.56	161.56	108.85	67.08	15.56						
		4 Wire Unbundled Digital Loop 4.8 Kbps-Zone 3		3	UDL	UDL4X	55.99	161.56	108.85	67.08	15.56						
		4 Wire Unbundled Digital Loop 9.6 Kbps-Zone 1		1	UDL	UDL9X	22.20	161.56	108.85	67.08	15.56						
		4 Wire Unbundled Digital Loop 9.6 Kbps-Zone 2		2	UDL	UDL9X	31.56	161.56	108.85	67.08	15.56						
		4 Wire Unbundled Digital Loop 9.6 Kbps-Zone 3		3	UDL	UDL9X	55.99	161.56	108.85	67.08	15.56						
		4 Wire Unbundled Digital 19.2 Kbps-Zone 1		1	UDL	UDL19	22.20	161.56	108.85	67.08	15.56						
		4 Wire Unbundled Digital 19.2 Kbps-Zone 2		2	UDL	UDL19	31.56	161.56	108.85	67.08	15.56						
		4 Wire Unbundled Digital 19.2 Kbps-Zone 3		3	UDL	UDL19	55.99	161.56	108.85	67.08	15.56						
		4 Wire Unbundled Digital Loop 56 Kbps-Zone 1		1	UDL	UDL56	22.20	161.56	108.85	67.08	15.56						
		4 Wire Unbundled Digital Loop 56 Kbps-Zone 2		2	UDL	UDL56	31.56	161.56	108.85	67.08	15.56						
		4 Wire Unbundled Digital Loop 56 Kbps-Zone 3		3	UDL	UDL56	55.99	161.56	108.85	67.08	15.56						
		4 Wire Unbundled Digital Loop 64 Kbps-Zone 1		1	UDL	UDL64	22.20	161.56	108.85	67.08	15.56						
		4 Wire Unbundled Digital Loop 64 Kbps-Zone 2		2	UDL	UDL64	31.56	161.56	108.85	67.08	15.56						
		4 Wire Unbundled Digital Loop 64 Kbps-Zone 3		3	UDL	UDL64	55.99	161.56	108.85	67.08	15.56						
		Switch-As-Is Conversion rate per UNE Loop, Single LSR, (per DS0)			UDL	URESL		8.98	8.98								
		Switch-As-Is Conversion rate per UNE Loop, Spreadsheet, (per DS0)			UDL	URESP		8.98	8.98								
		CLEC to CLEC Conversion Charge w/o outside dispatch			UDL	UREWO		102.11	49.74								
	2-WIRE Unbundled COPPER LOOP																
		2W Unbundled Copper Loop-Designed including manual service inquiry & facility reservation-Zone 1		1	UCL	UCLPB	8.30	148.50	102.82	75.05	15.63						
		2W Unbundled Copper Loop-Designed including manual service inquiry & facility reservation-Zone 2		2	UCL	UCLPB	11.80	148.50	102.82	75.05	15.63						
		2W Unbundled Copper Loop-Designed including manual service inquiry & facility reservation-Zone 3		3	UCL	UCLPB	20.94	148.50	102.82	75.05	15.63						
		2W Unbundled Copper Loop-Designed w/o manual service inquiry and facility reservation-Zone 1		1	UCL	UCLPW	8.30	123.81	70.09	60.64	9.12						
		2W Unbundled Copper Loop-Designed w/o manual service inquiry and facility reservation-Zone 2		2	UCL	UCLPW	11.80	123.81	70.09	60.64	9.12						
		2W Unbundled Copper Loop-Designed w/o manual service inquiry and facility reservation-Zone 3		3	UCL	UCLPW	20.94	123.81	70.09	60.64	9.12						
		CLEC to CLEC Conversion Charge w/o outside dispatch (UCL -Des)			UCL	UREWO		97.21	42.47								
		Order Coordination for Unbundled Copper Loops (per loop)			UCL	UCLMC		9.00	9.00								
	4-WIRE COPPER LOOP																
		4W Copper Loop-Designed including manual service inquiry and facility reservation-Zone 1		1	UCL	UCL4S	11.83	177.87	132.76	77.15	17.73						
		4W Copper Loop-Designed including manual service inquiry and facility reservation-Zone 2		2	UCL	UCL4S	16.81	177.87	132.76	77.15	17.73						
		4W Copper Loop-Designed including manual service inquiry and facility reservation-Zone 3		3	UCL	UCL4S	29.82	177.87	132.76	77.15	17.73						
		4W Copper Loop-Designed w/o manual service inquiry and facility reservation-Zone 1		1	UCL	UCL4W	11.83	153.18	100.03	62.74	11.22						
		4W Copper Loop-Designed w/o manual service inquiry and facility reservation-Zone 2		2	UCL	UCL4W	16.81	153.18	100.03	62.74	11.22						
		4W Copper Loop-Designed w/o manual service inquiry and facility reservation-Zone 3		3	UCL	UCL4W	29.82	153.18	100.03	62.74	11.22						
		Order Coordination for Unbundled Copper Loops (per loop)			UCL	UCLMC		9.00	9.00								
		CLEC to CLEC Conversion Charge w/o outside dispatch			UCL	UREWO		97.21	42.47								
		Order Coordination for Specified Conversion Time (per LSR)			UEA, UDN, UAL, UHL, UDL,USL	OCOSL		23.02									
	Rearrangements																
		EEL to UNE-L Retermination, per 2W Unbundled Voice Loop-SL2			UEA	UREEL		87.71	36.35								

UNBUNDLED NETWORK ELEMENTS - Florida														Attachment: 2 Exh A			
CATEGORY		RATE ELEMENTS	Interim	Zone	BCS	USOC	RATES($)					Svc Order Submitted Elec per LSR	Svc Order Submitted Manually per LSR	Incremental Charge - Manual Svc Order vs. Electronic-1st	Incremental Charge - Manual Svc Order vs. Electronic-Add'l	Incremental Charge - Manual Svc Order vs. Electronic-Disc 1st	Incremental Charge - Manual Svc Order vs. Electronic-Disc Add'l
								Nonrecurring		NRC Disconnect		OSS Rates($)					
							Rec	First	Add'l	First	Add'l	SOMEC	SOMAN	SOMAN	SOMAN	SOMAN	SOMAN
		EEL to UNE-L Retermination, per 4 Wire Unbundled Voice Loop			UEA	UREEL		87.71	36.35								
		EEL to UNE-L Retermination, per 2W ISDN Loop			UDN	UREEL		91.61	44.15								
		EEL to UNE-L Retermination, per 4 Wire Unbundled Digital Loop			UDL	UREEL		102.11	49.74								
		EEL to UNE-L Retermination, per 4 Wire Unbundled DS1 Loop			USL	UREEL		101.07	43.04								
UNE LOOP COMMINGLING																	
	2-WIRE ANALOG VOICE GRADE LOOP - COMMINGLING																
		2W Analog VG Loop- SL2 w/Loop or Ground Start Signaling-Zone 1		1	NTCVG	UEAL2	12.24	135.75	82.47	63.53	12.01						
		2W Analog VG Loop- SL2 w/Loop or Ground Start Signaling-Zone 2		2	NTCVG	UEAL2	17.40	135.75	82.47	63.53	12.01						
		2W Analog VG Loop- SL2 w/Loop or Ground Start Signaling-Zone 3		3	NTCVG	UEAL2	30.87	135.75	82.47	63.53	12.01						
		2W Analog VG Loop- SL2 w/Reverse Battery Signaling-Zone 1		1	NTCVG	UEAR2	12.24	135.75	82.47	63.53	12.01						
		2W Analog VG Loop- SL2 w/Reverse Battery Signaling-Zone 2		2	NTCVG	UEAR2	17.40	135.75	82.47	63.53	12.01						
		2W Analog VG Loop- SL2 w/Reverse Battery Signaling-Zone 3		3	NTCVG	UEAR2	30.87	135.75	82.47	63.53	12.01						
		Switch-As-Is Conversion rate per UNE Loop, Single LSR, (per DS0)			NTCVG	URESL		8.98	8.98								
		Switch-As-Is Conversion rate per UNE Loop, Spreadsheet, (per DS0)			NTCVG	URESP		8.98	8.98								
		CLEC to CLEC Conversion Charge w/o outside dispatch			NTCVG	UREWO		87.71	36.35								
		Loop Tagging-SL2 (SL2)			NTCVG	URETL		11.21	1.10								
	4-WIRE ANALOG VOICE GRADE LOOP - COMMINGLING																
		4W Analog VG Loop-Zone 1		1	NTCVG	UEAL4	18.89	167.86	115.15	67.08	15.56						
		4W Analog VG Loop-Zone 2		2	NTCVG	UEAL4	26.84	167.86	115.15	67.08	15.56						
		4W Analog VG Loop-Zone 3		3	NTCVG	UEAL4	47.62	167.86	115.15	67.08	15.56						
		Switch-As-Is Conversion rate per UNE Loop, Single LSR, (per DS0)			NTCVG	URESL		8.98	8.98								
		Switch-As-Is Conversion rate per UNE Loop, Spreadsheet, (per DS0)			NTCVG	URESP		8.98	8.98								
		CLEC to CLEC Conversion Charge w/o outside dispatch			NTCVG	UREWO		87.71	36.35								
	4-WIRE DS1 DIGITAL LOOP - COMMINGLING																
		4W DS1 Digital Loop-Zone 1		1	NTCD1	USLXX	70.74	313.75	181.48	61.22	13.53						
		4W DS1 Digital Loop-Zone 2		2	NTCD1	USLXX	100.54	313.75	181.48	61.22	13.53						
		4W DS1 Digital Loop-Zone 3		3	NTCD1	USLXX	178.39	313.75	181.48	61.22	13.53						
		Switch-As-Is Conversion rate per UNE Loop, Single LSR, (per DS1)			NTCD1	URESL		8.98	8.98								
		Switch-As-Is Conversion rate per UNE Loop, Spreadsheet, (per DS1)			NTCD1	URESP		8.98	8.98								
		CLEC to CLEC Conversion Charge w/o outside dispatch			NTCD1	UREWO		101.07	43.04								
	4-WIRE 19.2, 56 OR 64 KBPS DIGITAL GRADE LOOP - COMMINGLING																
		4 Wire Unbundled Digital Loop 2.4 Kbps-Zone 1		1	NTCUD	UDL2X	22.20	161.56	108.85	67.08	15.56						
		4 Wire Unbundled Digital Loop 2.4 Kbps-Zone 2		2	NTCUD	UDL2X	31.56	161.56	108.85	67.08	15.56						
		4 Wire Unbundled Digital Loop 2.4 Kbps-Zone 3		3	NTCUD	UDL2X	55.99	161.56	108.85	67.08	15.56						
		4 Wire Unbundled Digital Loop 4.8 Kbps-Zone 1		1	NTCUD	UDL4X	22.20	161.56	108.85	67.08	15.56						
		4 Wire Unbundled Digital Loop 4.8 Kbps-Zone 2		2	NTCUD	UDL4X	31.56	161.56	108.85	67.08	15.56						
		4 Wire Unbundled Digital Loop 4.8 Kbps-Zone 3		3	NTCUD	UDL4X	55.99	161.56	108.85	67.08	15.56						
		4 Wire Unbundled Digital Loop 9.6 Kbps-Zone 1		1	NTCUD	UDL9X	22.20	161.56	108.85	67.08	15.56						
		4 Wire Unbundled Digital Loop 9.6 Kbps-Zone 2		2	NTCUD	UDL9X	31.56	161.56	108.85	67.08	15.56						
		4 Wire Unbundled Digital Loop 9.6 Kbps-Zone 3		3	NTCUD	UDL9X	55.99	161.56	108.85	67.08	15.56						
		4 Wire Unbundled Digital 19.2 Kbps-Zone 1		1	NTCUD	UDL19	22.20	161.56	108.85	67.08	15.56						
		4 Wire Unbundled Digital 19.2 Kbps-Zone 2		2	NTCUD	UDL19	31.56	161.56	108.85	67.08	15.56						
		4 Wire Unbundled Digital 19.2 Kbps-Zone 3		3	NTCUD	UDL19	55.99	161.56	108.85	67.08	15.56						
		4 Wire Unbundled Digital Loop 56 Kbps-Zone 1		1	NTCUD	UDL56	22.20	161.56	108.85	67.08	15.56						
		4 Wire Unbundled Digital Loop 56 Kbps-Zone 2		2	NTCUD	UDL56	31.56	161.56	108.85	67.08	15.56						
		4 Wire Unbundled Digital Loop 56 Kbps-Zone 3		3	NTCUD	UDL56	55.99	161.56	108.85	67.08	15.56						
		4 Wire Unbundled Digital Loop 64 Kbps-Zone 1		1	NTCUD	UDL64	22.20	161.56	108.85	67.08	15.56						
		4 Wire Unbundled Digital Loop 64 Kbps-Zone 2		2	NTCUD	UDL64	31.56	161.56	108.85	67.08	15.56						
		4 Wire Unbundled Digital Loop 64 Kbps-Zone 3		3	NTCUD	UDL64	55.99	161.56	108.85	67.08	15.56						
		Switch-As-Is Conversion rate per UNE Loop, Single LSR, (per DS0)			NTCUD	URESL		8.98	8.98								
		Switch-As-Is Conversion rate per UNE Loop, Spreadsheet, (per DS0)			NTCUD	URESP		8.98	8.98								
		CLEC to CLEC Conversion Charge w/o outside dispatch			NTCUD	UREWO		102.11	49.74								
		Order Coordination for Specified Conversion Time (per LSR)			NTCVG, NTCUD, NTCD1	OCOSL		23.02									
UNBUNDLED EXCHANGE ACCESS LOOP																	
	2-WIRE ANALOG VOICE GRADE LOOP																
		2W Analog VG Loop- Service Level 1- Zone 1		1	UEANL	UEAL2	10.69	49.57	22.83	25.62	6.57						
		2W Analog VG Loop- Service Level 1- Zone 2		2	UEANL	UEAL2	15.20	49.57	22.83	25.62	6.57						
		2W Analog VG Loop- Service Level 1- Zone 3		3	UEANL	UEAL2	26.97	49.57	22.83	25.62	6.57						

UNBUNDLED NETWORK ELEMENTS - Florida														Attachment: 2 Exh A			
CATEGORY		RATE ELEMENTS	Interim	Zone	BCS	USOC	RATES($)					Svc Order Submitted Elec per LSR	Svc Order Submitted Manually per LSR	Incremental Charge - Manual Svc Order vs. Electronic-1st	Incremental Charge - Manual Svc Order vs. Electronic-Add'l	Incremental Charge - Manual Svc Order vs. Electronic-Disc 1st	Incremental Charge - Manual Svc Order vs. Electronic-Disc Add'l
								Nonrecurring		NRC Disconnect				OSS Rates($)			
							Rec	First	Add'l	First	Add'l	SOMEC	SOMAN	SOMAN	SOMAN	SOMAN	SOMAN
		2W Analog VG Loop- Service Level 1- Zone 1		1	UEANL	UEASL	10.69	49.57	22.83	25.62	6.57						
		2W Analog VG Loop- Service Level 1- Zone 2		2	UEANL	UEASL	15.20	49.57	22.83	25.62	6.57						
		2W Analog VG Loop- Service Level 1- Zone 3		3	UEANL	UEASL	26.97	49.57	22.83	25.62	6.57						
		Tag Loop at End User Premise			UEANL	URETL		8.93	0.88								
		Loop Testing-Basic 1st Half Hour			UEANL	URET1		48.65	0.00								
		Loop Testing-Basic Additional Half Hour			UEANL	URETA		23.95	23.95								
		Manual Order Coordination for UVL-SL1s (per loop)			UEANL	UEAMC		9.00	9.00								
		Order Coordination for Specified Conversion Time for UVL-SL1 (per LSR)			UEANL	OCOSL		23.02									
		Unbundled Non-Design Voice Loop, billing for BST providing make-up (Engineering Information-E.I.)			UEANL	UEANM		13.49									
		CLEC to CLEC Conversion Charge w/o Outside Dispatch (UVL-SL1)			UEANL	UREWO		15.78	8.94								
	2-WIRE Unbundled COPPER LOOP																
		2W Unbundled Copper Loop-Non-Designed Zone 1		1	UEQ	UEQ2X	7.69	44.98	20.90	24.88	6.45						
		2W Unbundled Copper Loop-Non-Designed-Zone 2		2	UEQ	UEQ2X	10.92	44.98	20.90	24.88	6.45						
		2W Unbundled Copper Loop-Non-Designed-Zone 3		3	UEQ	UEQ2X	19.38	44.98	20.90	24.88	6.45						
		Tag Loop at End User Premise			UEQ	URETL		8.93	0.88								
		Loop Testing-Basic 1st Half Hour			UEQ	URET1		48.65	0.00								
		Loop Testing-Basic Additional Half Hour			UEQ	URETA		23.95	23.95								
		Manual Order Coordination 2W Unbundled Copper Loop-Non-Designed (per loop)			UEQ	USBMC		9.00									
		Unbundled Copper Loop-Non-Design, billing for BST providing make-up (Engineering Information-E.I.)			UEQ	UEQMU		13.49									
		CLEC to CLEC Conversion Charge w/o Outside Dispatch (UCL-ND)			UEQ	UREWO		14.27	7.43								
LOOP MODIFICATION																	
		Unbundled Loop Modification, Removal of Load Coils-2W pair less than or equal to 18k ft, per Unbundled Loop			UAL, UHL, UCL, UEQ, ULS, UEA, UEANL, UEPSR, UEPSB	ULM2L		0.00	0.00								
		Unbundled Loop Modification Removal of Load Coils-4 Wire less than or equal to 18K ft, per Unbundled Loop			UHL, UCL, UEA	ULM4L		0.00	0.00								
		Unbundled Loop Modification Removal of Bridged Tap Removal, per unbundled loop			UAL, UHL, UCL, UEQ, ULS, UEA, UEANL, UEPSR, UEPSB	ULMBT		10.52	10.52								
SUB-LOOPS																	
	Sub-Loop Distribution																
		Sub-Loop-Per Cross Box Location-CLEC Feeder Facility Set-Up			UEANL, UEF	USBSA		487.23									
		Sub-Loop-Per Cross Box Location-Per 25 Pair Panel Set-Up			UEANL, UEF	USBSB		6.25									
		Sub-Loop-Per Building Equipment Room-CLEC Feeder Facility Set-Up			UEANL	USBSC		169.25									
		Sub-Loop-Per Building Equipment Room-Per 25 Pair Panel Set-Up			UEANL	USBSD		38.65									
		Sub-Loop Distribution Per 2W Analog VG Loop-Zone 1		1	UEANL	USBN2	6.46	60.19	21.78	47.50	5.26						
		Sub-Loop Distribution Per 2W Analog VG Loop-Zone 2		2	UEANL	USBN2	9.18	60.19	21.78	47.50	5.26						
		Sub-Loop Distribution Per 2W Analog VG Loop-Zone 3		3	UEANL	USBN2	16.29	60.19	21.78	47.50	5.26						
		Order Coordination for Unbundled Sub-Loops, per sub-loop pair			UEANL	USBMC		9.00	9.00								
		Sub-Loop Distribution Per 4W Analog VG Loop -Zone 1		1	UEANL	USBN4	7.37	68.83	30.42	49.71	6.60						
		Sub-Loop Distribution Per 4W Analog VG Loop -Zone 2		2	UEANL	USBN4	10.47	68.83	30.42	49.71	6.60						
		Sub-Loop Distribution Per 4W Analog VG Loop -Zone 3		3	UEANL	USBN4	18.58	68.83	30.42	49.71	6.60						
		Order Coordination for Unbundled Sub-Loops, per sub-loop pair			UEANL	USBMC		9.00	9.00								
		Sub-Loop 2W Intrabuilding Network Cable (INC)			UEANL	USBR2	3.96	51.84	13.44	47.50	5.26						
		Order Coordination for Unbundled Sub-Loops, per sub-loop pair			UEANL	USBMC		9.00	9.00								
		Sub-Loop 4W Intrabuilding Network Cable (INC)			UEANL	USBR4	9.37	55.91	17.51	49.71	6.60						
		Order Coordination for Unbundled Sub-Loops, per sub-loop pair			UEANL	USBMC		9.00	9.00								
		Loop Testing-Basic 1st Half Hour			UEANL	URET1		48.65	0.00								
		Loop Testing-Basic Additional Half Hour			UEANL	URETA		23.95	23.95								
		2W Copper Unbundled Sub-Loop Distribution-Zone 1		1	UEF	UCS2X	5.15	60.19	21.78	47.50	5.26						
		2W Copper Unbundled Sub-Loop Distribution-Zone 2		2	UEF	UCS2X	7.31	60.19	21.78	47.50	5.26						
		2W Copper Unbundled Sub-Loop Distribution-Zone 3		3	UEF	UCS2X	12.98	60.19	21.78	47.50	5.26						

UNBUNDLED NETWORK ELEMENTS - Florida														Attachment: 2 Exh A			
CATEGORY		RATE ELEMENTS	Interim	Zone	BCS	USOC	RATES($)					Svc Order Submitted Elec per LSR	Svc Order Submitted Manually per LSR	Incremental Charge - Manual Svc Order vs. Electronic-1st	Incremental Charge - Manual Svc Order vs. Electronic-Add'l	Incremental Charge - Manual Svc Order vs. Electronic-Disc 1st	Incremental Charge - Manual Svc Order vs. Electronic-Disc Add'l
								Nonrecurring		NRC Disconnect		OSS Rates($)					
							Rec	First	Add'l	First	Add'l	SOMEC	SOMAN	SOMAN	SOMAN	SOMAN	SOMAN
		Order Coordination for Unbundled Sub-Loops, per sub-loop pair			UEF	USBMC		9.00	9.00								
		4 Wire Copper Unbundled Sub-Loop Distribution-Zone 1		1	UEF	UCS4X	5.36	68.83	30.42	49.71	6.60						
		4 Wire Copper Unbundled Sub-Loop Distribution-Zone 2		2	UEF	UCS4X	7.61	68.83	30.42	49.71	6.60						
		4 Wire Copper Unbundled Sub-Loop Distribution-Zone 3		3	UEF	UCS4X	13.51	68.83	30.42	49.71	6.60						
		Order Coordination for Unbundled Sub-Loops, per sub-loop pair			UEF	USBMC		9.00	9.00								
		Loop Tagging Service Level 1, Unbundled Copper Loop, Non-Designed and Distribution Subloops			UEF, UEANL	URETL		8.93	0.88								
		Loop Testing-Basic 1st Half Hour			UEF	URET1		48.65	0.00								
		Loop Testing-Basic Additional Half Hour			UEF	URETA		23.95	23.95								
	Unbundled Sub-Loop Modification																
		Unbundled Sub-Loop Modification-2-W Copper Dist Load Coil/Equip Removal per 2-W PR			UEF	ULM2X		10.11	10.11								
		Unbundled Sub-loop Modification-4-W Copper Dist Load Coil/Equip Removal per 4-W PR			UEF	ULM4X		10.11	10.11								
		Unbundled Loop Modification, Removal of Bridge Tap, per unbundled loop			UEF	ULMBT		15.58	15.58								
	Unbundled Network Terminating Wire (UNTW)																
		Unbundled Network Terminating Wire (UNTW) per Pair			UENTW	UENPP	0.4572	18.02									
	Network Interface Device (NID)																
		Network Interface Device (NID)-1-2 lines			UENTW	UND12		71.49	48.87								
		Network Interface Device (NID)-1-6 lines			UENTW	UND16		113.89	89.07								
		Network Interface Device Cross Connect-2 W			UENTW	UNDC2		7.63	7.63								
		Network Interface Device Cross Connect-4W			UENTW	UNDC4		7.63	7.63								
UNE OTHER, PROVISIONING ONLY - NO RATE																	
		Unbundled Contact Name, Provisioning Only-no rate			UAL, UCL, UDC, UDL, UDN, UEA, UHL, UEANL, UEF, UEQ, UENTW, NTCVG, NTCUD, NTCD1, USL	UNECN	0.00	0.00									
		Unbundled DS1 Loop-Superframe Format Option-no rate			USL, NTCD1	CCOSF	0.00	0.00									
		Unbundled DS1 Loop-Expanded Superframe Format option-no rate			USL, NTCD1	CCOEF	0.00	0.00									
		NID-Dispatch and Service Order for NID installation			UENTW	UNDBX	0.00	0.00									
		UNTW Circuit Establishment, Provisioning Only-No Rate			UENTW	UENCE	0.00	0.00									
LOOP MAKE-UP																	
		Loop Makeup-Preordering w/o Reservation, per working or spare facility queried (Manual).			UMK	UMKLW		52.17	52.17								
		Loop Makeup-Preordering With Reservation, per spare facility queried (Manual).			UMK	UMKLP		55.07	55.07								
		Loop Makeup--With or w/o Reservation, per working or spare facility queried (Mechanized)			UMK	UMKMQ		0.6784	0.6784								
LINE SPLITTING																	
	END USER ORDERING-CENTRAL OFFICE BASED																
		Line Splitting-per line activation DLEC owned splitter			UEPSR UEPSB	UREOS	0.61										
		Line Splitting-per line activation BST owned-physical			UEPSR UEPSB	UREBP	0.61	29.68	21.28	19.57	9.61						
		Line Splitting-per line activation BST owned-virtual			UEPSR UEPSB	UREBV	1.134	29.68	21.28	19.57	9.61						
	UNBUNDLED EXCHANGE ACCESS LOOP																
	2-WIRE ANALOG VOICE GRADE LOOP																
		2W Analog VG Loop-Service Level 1-Line Splitting- Zone 1		1	UEPSR UEPSB	UEALS	10.69	49.57	22.83	25.62	6.57						
		2W Analog VG Loop-Service Level 1-Line Splitting- Zone 1		1	UEPSR UEPSB	UEABS	10.69	49.57	22.83	25.62	6.57						
		2W Analog VG Loop- Service Level 1-Line Splitting-Zone 2		2	UEPSR UEPSB	UEALS	15.20	49.57	22.83	25.62	6.57						
		2W Analog VG Loop- Service Level 1-Line Splitting-Zone 2		2	UEPSR UEPSB	UEABS	15.20	49.57	22.83	25.62	6.57						
		2W Analog VG Loop-Service Level 1-Line Splitting-Zone 3		3	UEPSR UEPSB	UEALS	26.97	49.57	22.83	25.62	6.57						
		2W Analog VG Loop-Service Level 1-Line Splitting-Zone 3		3	UEPSR UEPSB	UEABS	26.97	49.57	22.83	25.62	6.57						
	PHYSICAL COLLOCATION																
		Physical Collocation-2W Cross Connects (Loop) for Line Splitting			UEPSR UEPSB	PE1LS	0.0276	8.22	7.22	5.74	4.58						
	VIRTUAL COLLOCATION																
		Virtual Collocation-2W Cross Connects (Loop) for Line Splitting			UEPSR UEPSB	VE1LS	0.0502	11.57	11.57	0.00	0.00						
UNBUNDLED DEDICATED TRANSPORT																	

UNBUNDLED NETWORK ELEMENTS - Florida														Attachment: 2 Exh A			
CATEGORY		RATE ELEMENTS	Interim	Zone	BCS	USOC	RATES($)					Svc Order Submitted Elec per LSR	Svc Order Submitted Manually per LSR	Incremental Charge - Manual Svc Order vs. Electronic-1st	Incremental Charge - Manual Svc Order vs. Electronic-Add'l	Incremental Charge - Manual Svc Order vs. Electronic-Disc 1st	Incremental Charge - Manual Svc Order vs. Electronic-Disc Add'l
								Nonrecurring		NRC Disconnect		OSS Rates($)					
							Rec	First	Add'l	First	Add'l	SOMEC	SOMAN	SOMAN	SOMAN	SOMAN	SOMAN
	INTEROFFICE CHANNEL - DEDICATED TRANSPORT																
		Interoffice Channel-2W VG-per mile			U1TVX	1L5XX	0.0091										
		Interoffice Channel-2W VG-Facility Termination			U1TVX	U1TV2	25.32	47.35	31.78	18.31	7.03						
		Interoffice Channel-2W VG Rev Bat.-per mile			U1TVX	1L5XX	0.0091										
		Interoffice Channel-2W VG Rev Bat.-Facility Termination			U1TVX	U1TR2	25.32	47.35	31.78	18.31	7.03						
		Interoffice Channel-4W VG-per mile			U1TVX	1L5XX	0.0091										
		Interoffice Channel-4- Wire VG-Facility Termination			U1TVX	U1TV4	22.58	47.35	31.78	18.31	7.03						
		Interoffice Channel-56 kbps-per mile			U1TDX	1L5XX	0.0091										
		Interoffice Channel-56 kbps-Facility Termination			U1TDX	U1TD5	18.44	47.35	31.78	18.31	7.03						
		Interoffice Channel-64 kbps-per mile			U1TDX	1L5XX	0.0091										
		Interoffice Channel-64 kbps-Facility Termination			U1TDX	U1TD6	18.44	47.35	31.78	18.31	7.03						
		Interoffice Channel-DS1-per mile			U1TD1	1L5XX	0.1856										
		Interoffice Channel-DS1-Facility Termination			U1TD1	U1TF1	88.44	105.54	98.47	21.47	19.05						
		Interoffice Channel-DS3-per mile			U1TD3	1L5XX	3.87										
		Interoffice Channel-DS3-Facility Termination			U1TD3	U1TF3	1,071.00	335.46	219.28	72.03	70.56						
		Interoffice Channel-STS-1-per mile			U1TS1	1L5XX	3.87										
		Interoffice Channel-STS-1-Facility Termination			U1TS1	U1TFS	1,056.00	335.46	219.28	72.03	70.56						
		Local Channel-Dedicated-4W VG -Zone 1		1	ULDVX, UNCVX	ULDV4	23.52										
		Local Channel-Dedicated-4W VG -Zone 2		2	ULDVX, UNCVX	ULDV4	33.42										
		Local Channel-Dedicated-4W VG-Zone 3		3	ULDVX, UNCVX	ULDV4	59.29										
		Local Channel-Dedicated-DS1-Zone 1		1	ULDD1, UNC1X	ULDF1	41.96										
		Local Channel-Dedicated-DS1 -Zone 2		2	ULDD1, UNC1X	ULDF1	59.63										
		Local Channel-Dedicated-DS1 -Zone 3		3	ULDD1, UNC1X	ULDF1	105.80										
		Local Channel-Dedicated-DS3-Per Mile per month			ULDD3, UNC3X	1L5NC	9.78										
		Local Channel-Dedicated-DS3-Facility Termination			ULDD3, UNC3X	ULDF3	611.70										
		Local Channel-Dedicated-STS-1- Per Mile per month			ULDS1, UNCSX	1L5NC	9.78										
		Local Channel-Dedicated-STS-1 -Facility Termination			ULDS1, UNCSX	ULDFS	621.79										
	UNBUNDLED DARK FIBER - Stand Alone or in Combination																
		Dark Fiber-Interoffice Transport, Per Four Fiber Strands, Per Route Mile Or Fraction Thereof			UDF, UDFCX	1L5DF	26.85										
		Dark Fiber-Interoffice Transport, Per Four Fiber Strands, Per Route Mile Or Fraction Thereof			UDF, UDFCX	UDF14		751.34	193.88								
DARK FIBER																	
		Dark Fiber, Four Fiber Strands, Per Route Mile or Fraction Thereof per month-Local Channel			UDF, UDFCX	1L5DC	53.87										
		Dark Fiber, Four Fiber Strands, Per Route Mile or Fraction Thereof per month-Local Loop			UDF, UDFCX	1L5DL	53.87										
8XX ACCESS TEN DIGIT SCREENING																	
		8XX Access Ten Digit Screening, Per Call					0.0006252										
		8XX Access Ten Digit Screening, w/ 8FL No. Delivery, per query					0.0006252										
		8XX Access Ten Digit Screening, w/ POTS No. Delivery, per query					0.0006252										
LINE INFORMATION DATA BASE ACCESS (LIDB)																	
		LIDB Common Transport Per Query					0.0000203										
		LIDB Validation Per Query					0.0136959										
		LIDB Originating Point Code Establishment or Change			OQU	NRBPX		55.13	55.13	55.13	55.13						
CALLING NAME (CNAM) SERVICE																	
		CNAM for DB Owners, Per Query					0.001024										
		CNAM for Non DB Owners, Per Query					0.001024										
SELECTIVE ROUTING																	
		Selective Routing Per Unique Line Class Code Per Request Per Switch						93.55	93.55	12.71	12.71						
AIN SELECTIVE CARRIER ROUTING																	
		Regional Service Establishment						193,444.00		7,737.00							
		End Office Establishment						187.36	187.36	0.69	0.69						
		Query NRC, per query					0.0031868										
AIN - BELLSOUTH AIN SMS ACCESS SERVICE																	
		AIN SMS Access Service-Service Establishment, Per State, Initial Setup			A1N	CAMSE		43.56	43.56	44.93	44.93						
		AIN SMS Access Service-Port Connection-Dial/Shared Access			A1N	CAMDP		8.64	8.64	10.03	10.03						

UNBUNDLED NETWORK ELEMENTS - Florida														Attachment: 2 Exh A			
CATEGORY		RATE ELEMENTS	Interim	Zone	BCS	USOC	RATES($)					Svc Order Submitted Elec per LSR	Svc Order Submitted Manually per LSR	Incremental Charge - Manual Svc Order vs. Electronic-1st	Incremental Charge - Manual Svc Order vs. Electronic-Add'l	Incremental Charge - Manual Svc Order vs. Electronic-Disc 1st	Incremental Charge - Manual Svc Order vs. Electronic-Disc Add'l
								Nonrecurring		NRC Disconnect		OSS Rates($)					
							Rec	First	Add'l	First	Add'l	SOMEC	SOMAN	SOMAN	SOMAN	SOMAN	SOMAN
		AIN SMS Access Service-Port Connection-ISDN Access			A1N	CAM1P		8.64	8.64	10.03	10.03						
		AIN SMS Access Service-User Identification Codes-Per User ID Code			A1N	CAMAU		38.66	38.66	29.88	29.88						
		AIN SMS Access Service-Security Card, Per User ID Code, Initial or Replacement			A1N	CAMRC		75.10	75.10	12.93	12.93						
		AIN SMS Access Service-Storage, Per Unit (100 Kilobytes)					0.0028										
		AIN SMS Access Service-Session, Per Minute					0.7809										
		AIN SMS Access Service-Company Performed Session, Per Minute					0.4609										
HIGH CAPACITY UNBUNDLED LOCAL LOOP																	
	DS-3/STS-1 UNBUNDLED LOCAL LOOP - Stand Alone																
		DS3 Unbundled Local Loop-per mile			UE3	1L5ND	10.92										
		DS3 Unbundled Local Loop-Facility Termination			UE3	UE3PX	386.88	556.37	343.01	139.13	96.84						
		STS-1Unbundled Local Loop-per mile			UDLSX	1L5ND	10.92										
		STS-1 Unbundled Local Loop-Facility Termination			UDLSX	UDLS1	426.60	556.37	343.01	139.13	96.84						
ENHANCED EXTENDED LINK (EELs)																	
	Network Elements Used in Combinations																
		2W VG Loop (SL2) in Combination-Zone 1		1	UNCVX	UEAL2	12.24	127.59	60.54	48.00	6.31						
		2W VG Loop (SL2) in Combination-Zone 2		2	UNCVX	UEAL2	17.40	127.59	60.54	48.00	6.31						
		2W VG Loop (SL2) in Combination-Zone 3		3	UNCVX	UEAL2	30.87	127.59	60.54	48.00	6.31						
		4W Analog VG Loop in Combination -Zone 1		1	UNCVX	UEAL4	18.89	127.59	60.54	48.00	6.31						
		4W Analog VG Loop in Combination -Zone 2		2	UNCVX	UEAL4	26.84	127.59	60.54	48.00	6.31						
		4W Analog VG Loop in Combination -Zone 3		3	UNCVX	UEAL4	47.62	127.59	60.54	48.00	6.31						
		2W ISDN Loop in Combination-Zone 1		1	UNCNX	U1L2X	19.28	127.59	60.54	48.00	6.31						
		2W ISDN Loop in Combination-Zone 2		2	UNCNX	U1L2X	27.40	127.59	60.54	48.00	6.31						
		2W ISDN Loop in Combination-Zone 3		3	UNCNX	U1L2X	48.62	127.59	60.54	48.00	6.31						
		4W 56Kbps Digital Grade Loop in Combination-Zone 1		1	UNCDX	UDL56	22.20	127.59	60.54	48.00	6.31						
		4W 56Kbps Digital Grade Loop in Combination-Zone 2		2	UNCDX	UDL56	31.56	127.59	60.54	48.00	6.31						
		4W 56Kbps Digital Grade Loop in Combination-Zone 3		3	UNCDX	UDL56	55.99	127.59	60.54	48.00	6.31						
		4W 64Kbps Digital Grade Loop in Combination-Zone 1		1	UNCDX	UDL64	22.20	127.59	60.54	48.00	6.31						
		4W 64Kbps Digital Grade Loop in Combination-Zone 2		2	UNCDX	UDL64	31.56	127.59	60.54	48.00	6.31						
		4W 64Kbps Digital Grade Loop in Combination-Zone 3		3	UNCDX	UDL64	55.99	127.59	60.54	48.00	6.31						
		4W DS1 Digital Loop in Combination-Zone 1		1	UNC1X	USLXX	70.74	217.75	121.62	51.44	14.45						
		4W DS1 Digital Loop in Combination-Zone 2		2	UNC1X	USLXX	100.54	217.75	121.62	51.44	14.45						
		4W DS1 Digital Loop in Combination-Zone 3		3	UNC1X	USLXX	178.39	217.75	121.62	51.44	14.45						
		DS3 Local Loop in combination-per mile			UNC3X	1L5ND	10.92										
		DS3 Local Loop in combination-Facility Termination			UNC3X	UE3PX	386.88	244.42	154.73	67.10	26.27						
		STS-1 Local Loop in combination-per mile			UNCSX	1L5ND	10.92										
		STS-1 Local Loop in combination-Facility Termination			UNCSX	UDLS1	426.60	244.42	154.73	67.10	26.27						
		Interoffice Channel in combination-2W VG-per mile			UNCVX	1L5XX	0.0091										
		Interoffice Channel in combination-2W VG-Facility Termination			UNCVX	U1TV2	25.32	94.70	52.59	45.28	18.03						
		Interoffice Channel in combination-4W VG-per mile			UNCVX	1L5XX	0.0091										
		Interoffice Channel in combination-4W VG-Facility Termination			UNCVX	U1TV4	22.58	94.70	52.59	45.28	18.03						
		Interoffice Channel in combination-4W 56 kbps-per mile			UNCDX	1L5XX	0.0091										
		Interoffice Channel in combination-4W 56 kbps-Facility Termination			UNCDX	U1TD5	18.44	94.70	52.59	45.28	18.03						
		Interoffice Channel in combination-4W 64 kbps-per mile			UNCDX	1L5XX	0.0091										
		Interoffice Channel in combination-4W 64 kbps-Facility Termination			UNCDX	U1TD6	18.44	94.70	52.59	45.28	18.03						
		Interoffice Channel in combination-DS1-per mile			UNC1X	1L5XX	0.1856										
		Interoffice Channel in combination-DS1 Facility Termination			UNC1X	U1TF1	88.44	174.46	122.46	45.61	17.95						
		Interoffice Channel in combination-DS3-per mile			UNC3X	1L5XX	3.87										
		Interoffice Channel in combination-DS3-Facility Termination			UNC3X	U1TF3	1,071.00	320.00	138.20	38.60	18.81						
		Interoffice Channel in combination-STS-1-per mile			UNCSX	1L5XX	3.87										
		Interoffice Channel in combination-STS-1 Facility Termination			UNCSX	U1TFS	1,056.00	320.00	138.20	38.60	18.81						
ADDITIONAL NETWORK ELEMENTS																	
	Optional Features & Functions:																
		Clear Channel Capability Extended Frame Option-per DS1	I		U1TD1, ULDD1,UNC1X	CCOEF		0.00	0.00	0.00	0.00						
		Clear Channel Capability Super FrameOption-per DS1	I		U1TD1, ULDD1,UNC1X	CCOSF		0.00	0.00	0.00	0.00						
		Clear Channel Capability (SF/ESF) Option-Subsequent Activity-per DS1	I		ULDD1, U1TD1, UNC1X, USL	NRCCC		184.92	23.82	2.07	0.80						

UNBUNDLED NETWORK ELEMENTS - Florida														Attachment: 2 Exh A			
CATEGORY	RATE ELEMENTS	Interim	Zone	BCS	USOC	RATES($)					Svc Order Submitted Elec per LSR	Svc Order Submitted Manually per LSR	Incremental Charge - Manual Svc Order vs. Electronic-1st	Incremental Charge - Manual Svc Order vs. Electronic-Add'l	Incremental Charge - Manual Svc Order vs. Electronic-Disc 1st	Incremental Charge - Manual Svc Order vs. Electronic-Disc Add'l
							Nonrecurring		NRC Disconnect				OSS Rates($)			
						Rec	First	Add'l	First	Add'l	SOMEC	SOMAN	SOMAN	SOMAN	SOMAN	SOMAN
	C-bit Parity Option-Subsequent Activity-per DS3	i		U1TD3, ULDD3, UE3, UNC3X	NRCC3		219.09	7.67	0.773	0.00						
	DS1/DS0 Channel System			UNC1X	MQ1	146.77	57.28	14.74	1.50	1.34						
	DS3/DS1Channel System			UNC3X, UNCSX	MQ3	211.19	115.60	56.54	12.16	4.26						
	VG COCI in combination			UNCVX	1D1VG	1.38	6.71	4.84								
	VG COCI-for Stand Alone Local Loop			UEA	1D1VG	1.38	6.71	4.84	0.00	0.00						
	VG COCI-for connection to a channelized DS1 Local Channel in the same SWC as collocation			U1TUC	1D1VG	1.38	6.71	4.84	0.00	0.00						
	OCU-DP COCI (2.4-64kbs) in combination			UNCDX	1D1DD	2.10	6.71	4.84	0.00	0.00						
	OCU-DP COCI (2.4-64kbs)-for Stand Alone Local Loop			UDL	1D1DD	2.10	6.71	4.84	0.00	0.00						
	OCU-DP COCI (2.4-64kbs)-for connection to a channelized DS1 Local Channel in the same SWC as collocation			U1TUD	1D1DD	2.10	6.71	4.84	0.00	0.00						
	2W ISDN COCI (BRITE) in combination			UNCNX	UC1CA	3.66	6.71	4.84	0.00	0.00						
	2W ISDN COCI (BRITE)-for a Local Loop			UDN	UC1CA	3.66	6.71	4.84	0.00	0.00						
	2W ISDN COCI (BRITE)-for connection to a channelized DS1 Local Channel in the same SWC as collocation			U1TUB	UC1CA	3.66	6.71	4.84	0.00	0.00						
	DS1 COCI in combination			UNC1X	UC1D1	13.76	6.71	4.84	0.00	0.00						
	DS1 COCI-for Stand Alone Local Channel			ULDD1	UC1D1	13.76	6.71	4.84	0.00	0.00						
	DS1 COCI-for Stand Alone Interoffice Channel			U1TD1	UC1D1	13.76	6.71	4.84	0.00	0.00						
	DS1 COCI-for Stand Alone Local Loop			USL	UC1D1	13.76	6.71	4.84	0.00	0.00						
	DS1 COCI-for connection to a channelized DS1 Local Channel in the same SWC as collocation			U1TUA	UC1D1	13.76	6.71	4.84	0.00	0.00						
	Wholesale to UNE, Switch-As-Is Conversion Charge			UNCVX, U1TVX, UNCDX, U1TDX, UNC1X, U1TD1,UNC3X, U1TD3, UNCSX, U1TS1, UDF,UDFCX	UNCCC		8.98	8.98								
	Unbundled Misc Rate Element, SNE SAI, Single Network Element-Switch As Is Non-recurring Charge, per circuit (LSR)	I		U1TVX, U1TDX, U1TD1, U1TD3, U1TS1, UDF, UE3	URESL		8.98	8.98								
	Unbundled Misc Rate Element, SNE SAI, Single Network Element-Switch As Is Non-recurring Charge, incremental charge per circuit on a spreadsheet	I		U1TVX, U1TDX, U1TD1, U1TD3, U1TS1, UDF, UE3	URESP		8.98	8.98								
	UNE Reconfiguration Change Charge per Circuit	I		UNC1X	URERC		35.00	35.00								
	UNE Reconfiguration Change Charge per Circuit Project Managed	I		UNC1X	URERP		1.49	1.49								
Access to DCS - Customer Reconfiguration (FlexServ)																
	Customer Reconfiguration Establishment						1.63		1.63							
	DS1 DCS Termination with DS0 Switching					27.39	32.89	23.58	16.96	12.77						
	DS1 DCS Termination with DS1 Switching					11.70	25.07	15.76	13.05	8.86						
	DS3 DCS Termination with DS1 Switching					146.81	32.89	23.58	16.96	12.77						
Node (SynchroNet)																
	Node per month			UNCDX	UNCNT	16.35										
Service Rearrangements																
	NRC-Change in Facility Assignment per circuit Service Rearrangement	I		U1TVX, U1TDX, UEA, UDL, U1TUC, U1TUD, U1TUB, ULDVX, ULDDX, UNCVX, UNCDX, UNC1X	URETD		101.07	43.04								
	NRC-Change in Facility Assignment per circuit Project Management (added to CFA per circuit if project managed)	I		U1TVX, U1TDX, UEA, UDL, U1TUC, U1TUD, U1TUB, ULDVX, ULDDX, UNCVX, UNCDX, UNC1X	URETB		3.67	3.67								
	NRC-Order Coordination Specific Time-Dedicated Transport	I		UNC1X	OCOSR		18.90	18.90								
COMMINGLING																

UNBUNDLED NETWORK ELEMENTS - Florida														Attachment: 2 Exh A			
CATEGORY		RATE ELEMENTS	Interim	Zone	BCS	USOC	RATES($)					Svc Order Submitted Elec per LSR	Svc Order Submitted Manually per LSR	Incremental Charge - Manual Svc Order vs. Electronic-1st	Incremental Charge - Manual Svc Order vs. Electronic-Add'l	Incremental Charge - Manual Svc Order vs. Electronic-Disc 1st	Incremental Charge - Manual Svc Order vs. Electronic-Disc Add'l
								Nonrecurring		NRC Disconnect		OSS Rates($)					
							Rec	First	Add'l	First	Add'l	SOMEC	SOMAN	SOMAN	SOMAN	SOMAN	SOMAN
		Commingling Authorization			UNCVX, UNCDX, UNC1X, UNC3X, UNCSX, U1TD1, U1TD3, U1TS1, UE3, UDLSX, U1TVX, U1TDX, U1TUB, ULDVX, ULDD1, ULDD3, ULDS1	CMGAU	0.00	0.00	0.00	0.00	0.00						
	Commingled (UNE part of single bandwidth circuit)																
		Commingled VG COCI			XDV2X, NTCVG	1D1VG	1.38	6.71	4.84	0.00	0.00						
		Commingled Digital COCI			XDV6X, NTCUD	1D1DD	2.10	6.71	4.84	0.00	0.00						
		Commingled ISDN COCI			XDD4X	UC1CA	3.66	6.71	4.84	0.00	0.00						
		Commingled 2W VG Interoffice Channel			XDV2X	U1TV2	25.32	94.70	52.59	45.28	18.03						
		Commingled 4W VG Interoffice Channel			XDV6X	U1TV4	22.58	94.70	52.59	45.28	18.03						
		Commingled 56kbps Interoffice Channel			XDD4X	U1TD5	18.44	94.70	52.59	45.28	18.03						
		Commingled 64kbps Interoffice Channel			XDD4X	U1TD6	18.44	94.70	52.59	45.28	18.03						
		Commingled VG/DS0 Interoffice Channel Mileage			XDV2X, XDV6X, XDD4X	1L5XX	0.0091										
		Commingled 2W Local Loop Zone 1		1	XDV2X	UEAL2	12.24	127.59	60.54	48.00	6.31						
		Commingled 2W Local Loop Zone 2		2	XDV2X	UEAL2	17.40	127.59	60.54	48.00	6.31						
		Commingled 2W Local Loop Zone 3		3	XDV2X	UEAL2	30.87	127.59	60.54	48.00	6.31						
		Commingled 4W Local Loop Zone 1		1	XDV6X	UEAL4	18.89	127.59	60.54	48.00	6.31						
		Commingled 4W Local Loop Zone 2		2	XDV6X	UEAL4	26.84	127.59	60.54	48.00	6.31						
		Commingled 4W Local Loop Zone 3		3	XDV6X	UEAL4	47.62	127.59	60.54	48.00	6.31						
		Commingled 56kbps Local Loop Zone 1		1	XDD4X	UDL56	22.20	127.59	60.54	48.00	6.31						
		Commingled 56kbps Local Loop Zone 2		2	XDD4X	UDL56	31.56	127.59	60.54	48.00	6.31						
		Commingled 56kbps Local Loop Zone 3		3	XDD4X	UDL56	55.99	127.59	60.54	48.00	6.31						
		Commingled 64kbps Local Loop Zone 1		1	XDD4X	UDL64	22.20	127.59	60.54	48.00	6.31						
		Commingled 64kbps Local Loop Zone 2		2	XDD4X	UDL64	31.56	127.59	60.54	48.00	6.31						
		Commingled 64kbps Local Loop Zone 3		3	XDD4X	UDL64	55.99	127.59	60.54	48.00	6.31						
		Commingled ISDN Local Loop Zone 1		1	XDD4X	U1L2X	19.28	127.59	60.54	48.00	6.31						
		Commingled ISDN Local Loop Zone 2		2	XDD4X	U1L2X	27.40	127.59	60.54	48.00	6.31						
		Commingled ISDN Local Loop Zone 3		3	XDD4X	U1L2X	48.62	127.59	60.54	48.00	6.31						
		Commingled DS1 COCI			XDH1X, NTCD1	UC1D1	13.76	6.71	4.84	0.00	0.00						
		Commingled DS1 Interoffice Channel			XDH1X	U1TF1	88.44	174.46	122.46	45.61	17.95						
		Commingled DS1 Interoffice Channel Mileage			XDH1X	1L5XX	0.1856										
		Commingled DS1/DS0 Channel System			XDH1X	MQ1	146.77	57.28	14.74								
		Commingled DS1 Local Loop Zone 1		1	XDH1X	USLXX	70.74	217.75	121.62	51.44	14.45						
		Commingled DS1 Local Loop Zone 2		2	XDH1X	USLXX	100.54	217.75	121.62	51.44	14.45						
		Commingled DS1 Local Loop Zone 3		3	XDH1X	USLXX	178.39	217.75	121.62	51.44	14.45						
		Commingled DS3 Local Loop			HFQC6	UE3PX	386.88	244.42	154.73	67.10	26.27						
		Commingled DS3/STS-1 Local Loop Mileage			HFQC6, HFRST	1L5ND	10.92										
		Commingled STS-1 Local Loop			HFRST	UDLS1	426.60	244.42	154.73	67.10	26.27						
		Commingled DS3/DS1 Channel System			HFQC6	MQ3	211.19	115.60	56.54	12.16	4.26						
		Commingled DS3 Interoffice Channel			HFQC6	U1TF3	1,071.00	320.00	138.20	38.60	18.81						
		Commingled DS3 Interoffice Channel Mileage			HFQC6	1L5XX	3.87										
		Commingled STS-1Interoffice Channel			HFRST	U1TFS	1,056.00	320.00	138.20	38.60	18.81						
		Commingled STS-1Interoffice Channel Mileage			HFRST	1L5XX	3.87										
		Commingled Dark Fiber-Interoffice Transport, Per Four Fiber Strands, Per Route Mile Or Fraction Thereof			HEQDL	1L5DF	26.85										
		Commingled Dark Fiber-Interoffice Transport, Per Four Fiber Strands, Per Route Mile Or Fraction Thereof			HEQDL	UDF14		751.34	193.88								
SIGNALING (CCS7)																	
	NOTE:"bk" beside a rate indicates that the parties have agreed to bill and keep for that element pursuant to the terms and conditions in Attachment 3.																
		CCS7 Signaling Usage, Per TCAP Message					0.0000607bk										
		CCS7 Signaling Usage, Per ISUP Message					0.0000152bk										
LNP Query Service																	
		LNP Charge Per query					0.000852										

UNBUNDLED NETWORK ELEMENTS - Florida														Attachment: 2 Exh A			
CATEGORY		RATE ELEMENTS	Interim	Zone	BCS	USOC	RATES($)					Svc Order Submitted Elec per LSR	Svc Order Submitted Manually per LSR	Incremental Charge - Manual Svc Order vs. Electronic-1st	Incremental Charge - Manual Svc Order vs. Electronic-Add'l	Incremental Charge - Manual Svc Order vs. Electronic-Disc 1st	Incremental Charge - Manual Svc Order vs. Electronic-Disc Add'l
								Nonrecurring		NRC Disconnect		OSS Rates($)					
							Rec	First	Add'l	First	Add'l	SOMEC	SOMAN	SOMAN	SOMAN	SOMAN	SOMAN
		LNP Service Establishment Manual						13.83	13.83	12.71	12.71						
		LNP Service Provisioning with Point Code Establishment						655.50	334.88	297.03	218.40						
911 PBX LOCATE																	
	911 PBX LOCATE DATABASE CAPABILITY																
		Service Establishment per CLEC per End User Account			9PBDC	9PBEU		1,820.00									
		Changes to TN Range or Customer Profile			9PBDC	9PBTN		182.14									
		Per Telephone Number (Monthly)			9PBDC	9PBMM	0.07										
		Change Company (Service Provider) ID			9PBDC	9PBPC		534.66									
		PBX Locate Service Support per CLEC (Monthlt)			9PBDC	9PBMR	178.80										
		Service Order Charge			9PBDC	9PBSC		11.90									
	911 PBX LOCATE TRANSPORT COMPONENT																
	See Att 3																
	Note: Rates displaying an "I" in Interim column are interim as a result of a Commission order.																
UNBUNDLED LOCAL EXCHANGE SWITCHING(PORTS)																	
	The Exchange Switching Port Rates Reflected Here Apply to Embedded Base Switching Ports as of March 10, 2005 and Consist of the TELRIC Cost Based Rates Plus $1.00 in Accordance with the TRRO.																
	Exchange Ports																
	NOTE: Although the Port Rate includes all available features in GA, KY, LA & TN, the desired features will need to be ordered using retail USOCs																
	2-WIRE VOICE GRADE LINE PORT RATES (RES)																
		Exchange Ports-2W Analog Line Port- Res.			UEPSR	UEPRL	2.40	3.74	3.63	1.88	1.80						
		Exchange Ports-2W Analog Line Port with Caller ID-Res.			UEPSR	UEPRC	2.40	3.74	3.63	1.88	1.80						
		Exchange Ports-2W Analog Line Port outgoing only-Res.			UEPSR	UEPRO	2.40	3.74	3.63	1.88	1.80						
		Exchange Ports-2W VG unbundled FL area calling with Caller ID-Res.			UEPSR	UEPAF	2.40	3.74	3.63	1.88	1.80						
		Exchange Ports-2W VG unbundled FL Residence Area Calling Plan, w/o Caller ID capability			UEPSR	UEPA9	2.40	3.74	3.63	1.88	1.80						
		Exchange Ports-2W VG unbundled FL extended dialing port for use with CREX7 and Caller ID			UEPSR	UEPA1	2.40	3.74	3.63	1.88	1.80						
		Exchange Ports-2W VG unbundled FL extended dialing port for use with CREX7, w/o Caller ID capability			UEPSR	UEPA8	2.40	3.74	3.63	1.88	1.80						
		Exchange Ports-2W VG unbundled res, low usage line port with Caller ID (LUM)			UEPSR	UEPAP	2.40	3.74	3.63	1.88	1.80						
		2W voice unbundled Low Usage Line Port w/o Caller ID Capability			UEPSR	UEPRT	2.40	3.74	3.63	1.88	1.80						
		Subsequent Activity			UEPSR	USASC	0.00	0.00	0.00								
	FEATURES																
		All Available Vertical Features			UEPSR	UEPVF	2.26	0.00	0.00								
	2-WIRE VOICE GRADE LINE PORT RATES (BUS)																
		Exchange Ports-2W Analog Line Port w/o Caller ID-Bus			UEPSB	UEPBL	2.40	3.74	3.63	1.88	1.80						
		Exchange Ports-2W VG unbundled Line Port with unbundled port with Caller+E484 ID-Bus.			UEPSB	UEPBC	2.40	3.74	3.63	1.88	1.80						
		Exchange Ports-2W Analog Line Port outgoing only-Bus.			UEPSB	UEPBO	2.40	3.74	3.63	1.88	1.80						
		Exhange Ports-2W VG unbundled incoming only port with Caller ID-Bus			UEPSB	UEPB1	2.40	3.74	3.63	1.88	1.80						
		2W voice unbundled Incoming Only Port w/o Caller ID Capability			UEPSB	UEPBE	2.40	3.74	3.63	1.88	1.80						
		Subsequent Activity			UEPSB	USASC	0.00	0.00	0.00								
	FEATURES																
		All Available Vertical Features			UEPSB	UEPVF	2.26	0.00	0.00								
	EXCHANGE PORT RATES (DID & PBX)																
		2W VG Unbundled 2-Way PBX Trunk-Res			UEPSE	UEPRD	2.40	39.06	18.18	12.35	0.7187						
		2W VG Line Side Unbundled 2-Way PBX Trunk-Bus			UEPSP	UEPPC	2.40	39.06	18.18	12.35	0.7187						
		2W VG Line Side Unbundled Outward PBX Trunk-Bus			UEPSP	UEPPO	2.40	39.06	18.18	12.35	0.7187						
		2W VG Line Side Unbundled Incoming PBX Trunk-Bus			UEPSP	UEPP1	2.40	39.06	18.18	12.35	0.7187						
		2W Analog Long Distance Terminal PBX Trunk-Bus			UEPSP	UEPLD	2.40	39.06	18.18	12.35	0.7187						
		2W Voice Unbundled PBX LD Terminal Ports			UEPSP	UEPLD	2.40	39.06	18.18	12.35	0.7187						
		2W Vice Unbundled 2-Way PBX Usage Port			UEPSP	UEPXA	2.40	39.06	18.18	12.35	0.7187						
		2W Voice Unbundled PBX Toll Terminal Hotel Ports			UEPSP	UEPXB	2.40	39.06	18.18	12.35	0.7187						
		2W Voice Unbundled PBX LD DDD Terminals Port			UEPSP	UEPXC	2.40	39.06	18.18	12.35	0.7187						
		2W Voice Unbundled PBX LD Terminal Switchboard Port			UEPSP	UEPXD	2.40	39.06	18.18	12.35	0.7187						
		2W Voice Unbundled PBX LD Terminal Switchboard IDD Capable Port			UEPSP	UEPXE	2.40	39.06	18.18	12.35	0.7187						

UNBUNDLED NETWORK ELEMENTS - Florida														Attachment: 2 Exh A			
CATEGORY	RATE ELEMENTS	Interim	Zone	BCS	USOC	RATES($)					Svc Order Submitted Elec per LSR	Svc Order Submitted Manually per LSR	Incremental Charge - Manual Svc Order vs. Electronic-1st	Incremental Charge - Manual Svc Order vs. Electronic-Add'l	Incremental Charge - Manual Svc Order vs. Electronic-Disc 1st	Incremental Charge - Manual Svc Order vs. Electronic-Disc Add'l
							Nonrecurring		NRC Disconnect		OSS Rates($)					
						Rec	First	Add'l	First	Add'l	SOMEC	SOMAN	SOMAN	SOMAN	SOMAN	SOMAN
	2W Voice Unbundled 2-Way PBX Hotel/Hospital Economy Administrative Calling Port			UEPSP	UEPXL	2.40	39.06	18.18	12.35	0.7187						
	2W Voice Unbundled 2-Way PBX Hotel/Hospital Economy Rm Calling Port			UEPSP	UEPXM	2.40	39.06	18.18	12.35	0.7187						
	2W Voice Unbundled 1-Way Outgoing PBX Hotel/Hospital Discount Rm Calling Port			UEPSP	UEPXO	2.40	39.06	18.18	12.35	0.7187						
	2W Voice Unbundled 1-Way Outgoing PBX Measured Port			UEPSP	UEPXS	2.40	39.06	18.18	12.35	0.7187						
	Subsequent Activity			UEPSP	USASC	0.00	0.00	0.00								
FEATURES																
	All Available Vertical Features			UEPSP UEPSE	UEPVF	2.26	0.00	0.00								
NOTE: Transmission/usage charges associated with POTS circuit switched usage will also apply to circuit switched voice and/or circuit switched data transmission by B-Channels associated with 2-wire ISDN ports.																
NOTE: Access to B Channel or D Channel Packet capabilities will be available only through BFR/New Business Request Process. Rates for the packet capabilities will be determined via the Bona Fide Request/New Business Request Process.																
2-WIRE VOICE GRADE LINE PORT RATES (DID)																
	Exchange Ports-2W DID Port			UEPEX	UEPP2	9.73	78.41	15.82	41.94	4.26						
2-WIRE VOICE GRADE LINE PORT RATES (ISDN-BRI)																
	Exchange Ports-2W ISDN Port (See Notes below.)			UEPTX, UEPSX	U1PMA	8.83	46.83	50.68	27.64	11.93						
	All Features Offered			UEPTX, UEPSX	UEPVF	2.26	0.00	0.00								
	Exchange Ports-2W ISDN Port -- Channel Profiles			UEPTX, UEPSX	U1UMA	0.00	0.00	0.00								
NOTE: Transmission/usage charges associated with POTS circuit switched usage will also apply to circuit switched voice and/or circuit switched data transmission by B-Channels associated with 2-wire ISDN ports.																
NOTE: Access to B Channel or D Channel Packet capabilities will be available only through BFR/New Business Request Process. Rates for the packet capabilities will be determined via the Bona Fide Request/New Business Request Process.																
UNBUNDLED PORT with REMOTE CALL FORWARDING CAPABILITY																
UNBUNDLED REMOTE CALL FORWARDING SERVICE - RESIDENCE																
	Unbundled Remote Call Forwarding Service, Area Calling, Res			UEPVR	UERAC	2.40	3.74	3.63	1.88	1.80						
	Unbundled Remote Call Forwarding Service, Local Calling-Res			UEPVR	UERLC	2.40	3.74	3.63	1.88	1.80						
	Unbundled Remote Call Forwarding Service, InterLATA-Res			UEPVR	UERTE	2.40	3.74	3.63	1.88	1.80						
	Unbundled Remote Call Forwarding Service, IntraLATA-Res			UEPVR	UERTR	2.40	3.74	3.63	1.88	1.80						
Non-Recurring																
	Unbundled Remote Call Forwarding Service -Conversion-Switch-as-is			UEPVR	USAC2		0.102	0.102								
	Unbundled Remote Call Forwarding Service -Conversion with allowed change (PIC and LPIC)			UEPVR	USACC		0.102	0.102								
UNBUNDLED REMOTE CALL FORWARDING - Bus																
	Unbundled Remote Call Forwarding Service, Area Calling-Bus			UEPVB	UERAC	2.40	3.74	3.63	1.88	1.80						
	Unbundled Remote Call Forwarding Service, Local Calling-Bus			UEPVB	UERLC	2.40	3.74	3.63	1.88	1.80						
	Unbundled Remote Call Forwarding Service, InterLATA-Bus			UEPVB	UERTE	2.40	3.74	3.63	1.88	1.80						
	Unbundled Remote Call Forwarding Service, IntraLATA-Bus			UEPVB	UERTR	2.40	3.74	3.63	1.88	1.80						
	Unbundled Remote Call Forwarding Service Expanded and Exception Local Calling			UEPVB	UERVJ	2.40	3.74	3.63	1.88	1.80						
Non-Recurring																
	Unbundled Remote Call Forwarding Service-Conversion-Switch-as-is			UEPVB	USAC2		0.102	0.102								
	Unbundled Remote Call Forwarding Service -Conversion with allowed change (PIC and LPIC)			UEPVB	USACC		0.102	0.102								
UNBUNDLED LOCAL SWITCHING, PORT USAGE																
End Office Switching (Port Usage)																
	End Office Switching Function, Per MOU					0.0007662										
	End Office Trunk Port-Shared, Per MOU					0.000164										
Tandem Switching (Port Usage) (Local or Access Tandem)																
	Tandem Switching Function Per MOU					0.0001319										
	Tandem Trunk Port-Shared, Per MOU					0.000235										
	Tandem Switching Function Per MOU (Melded)					0.000027185										
	Tandem Trunk Port-Shared, Per MOU (Melded)					0.000048434										
Melded Factor: 20.61% of the Tandem Rate																
Common Transport																
	Common Transport-Per Mile, Per MOU					0.0000035										
	Common Transport-Facilities Termination Per MOU					0.0004372										
UNBUNDLED PORT/LOOP COMBINATIONS - COST BASED RATES																
>Cost Based Rates are applied where BellSouth is required by FCC and/or State Commission rule to provide Unbundled Local Switching or Switch Ports.																
>The UNE-P Switching Port Rates Reflected in the Cost Based Section Apply to Embedded Base UNE-Ps as of March 10, 2005 and Consist of the TELRIC Cost Based Rates Plus $1.00 in Accordance with the TRRO.																
>Features shall apply to the Unbundled Port/Loop Combination - Cost Based Rate section in the same manner as they are applied to the Stand-Alone Unbundled Port section of this Rate Exhibit.																
>End Office and Tandem Switching Usage and Common Transport Usage rates in the Port section of this rate exhibit shall apply to all combinations of loop/port network elements except for UNE Coin Port/Loop Combinations.																

UNBUNDLED NETWORK ELEMENTS - Florida													Attachment: 2 Exh A			
CATEGORY	RATE ELEMENTS	Interim	Zone	BCS	USOC	RATES($)					Svc Order Submitted Elec per LSR	Svc Order Submitted Manually per LSR	Incremental Charge - Manual Svc Order vs. Electronic-1st	Incremental Charge - Manual Svc Order vs. Electronic-Add'l	Incremental Charge - Manual Svc Order vs. Electronic-Disc 1st	Incremental Charge - Manual Svc Order vs. Electronic-Disc Add'l
							Nonrecurring		NRC Disconnect		OSS Rates($)					
						Rec	First	Add'l	First	Add'l	SOMEC	SOMAN	SOMAN	SOMAN	SOMAN	SOMAN
	>The first and additional Port nonrecurring charges apply to Not Currently Combined Combos. For Currently Combined Combos the nonrecurring charges shall be those identified in the Nonrecurring - Currently Combined sections.															
	2-WIRE VOICE GRADE LOOP WITH 2-WIRE LINE PORT (RES)															
	UNE Port/Loop Combination Rates															
	2W VG Loop/Port Combo-Zone 1					11.94										
	2W VG Loop/Port Combo-Zone 2					16.05										
	2W VG Loop/Port Combo-Zone 3					26.80										
	UNE Loop Rates															
	2W VG Loop (SL1)-Zone 1		1	UEPRX	UEPLX	9.77										
	2W VG Loop (SL1)-Zone 2		2	UEPRX	UEPLX	13.88										
	2W VG Loop (SL1)-Zone 3		3	UEPRX	UEPLX	24.63										
	2-Wire Voice Grade Line Port Rates (Res)															
	2W voice unbundled port-residence			UEPRX	UEPRL	2.17	53.31	26.46	27.50	8.37						
	2W voice unbundled port with Caller ID-res			UEPRX	UEPRC	2.17	53.31	26.46	27.50	8.37						
	2W voice unbundled port outgoing only-res			UEPRX	UEPRO	2.17	53.31	26.46	27.50	8.37						
	2W voice unbundled FL Area Calling with Caller ID-res			UEPRX	UEPAF	2.17	53.31	26.46	27.50	8.37						
	2W voice unbundles res, low usage line port with Caller ID (LUM)			UEPRX	UEPAP	2.17	53.31	26.46	27.50	8.37						
	2W voice unbundled FL extended dialing with Caller ID			UEPRX	UEPA1	2.17	53.31	26.46	27.50	8.37						
	2W voice unbundled FL extended dialing port w/o Caller ID capability			UEPRX	UEPA8	2.17	53.31	26.46	27.50	8.37						
	2W voice unbundled FL Area Calling Port w/o Caller ID Capability			UEPRX	UEPA9	2.17	53.31	26.46	27.50	8.37						
	2W voice unbundled Low Usage Line Port w/o Caller ID Capability			UEPRX	UEPRT	2.17	53.31	26.46	27.50	8.37						
	FEATURES															
	All Features Offered			UEPRX	UEPVF	2.26	0.00	0.00								
	NONRECURRING CHARGES (NRCs) - CURRENTLY COMBINED															
	2W VG Loop/Line Port Combination-Conversion-Switch-as-is			UEPRX	USAC2		0.102	0.102								
	2W VG Loop/Line Port Combination -Conversion-Switch with change			UEPRX	USACC		0.102	0.102								
	2W VG Loop/Line Port Platform-Installation Charge at QuickService location-Not Conversion of Existing Service			UEPRX	URECC		0.102									
	ADDITIONAL NRCs															
	2W VG Loop/Line Port Combination-Subsequent Activity			UEPRX	USAS2	0.00	0.00	0.00								
	Unbundled Misc Rate Element, Tag Loop at End User Premise			UEPRX	URETL		8.33	0.83								
	OFF/ON PREMISES EXTENSION CHANNELS															
	2W Analog VG Extension Loop – Non-Design		1	UEPRX	UEAEN	10.69	49.57	22.83	25.62	6.57						
	2W Analog VG Extension Loop – Non-Design		2	UEPRX	UEAEN	15.20	49.57	22.83	25.62	6.57						
	2W Analog VG Extension Loop – Non-Design		3	UEPRX	UEAEN	26.97	49.57	22.83	25.62	6.57						
	2W Analog VG Extension Loop – Design		1	UEPRX	UEAED	12.24	135.75	82.47	63.53	12.01						
	2W Analog VG Extension Loop – Design		2	UEPRX	UEAED	17.40	135.75	82.47	63.53	12.01						
	2W Analog VG Extension Loop – Design		3	UEPRX	UEAED	30.87	135.75	82.47	63.53	12.01						
	INTEROFFICE TRANSPORT															
	Interoffice Transport-Dedicated-2W VG-Facility Termination			UEPRX	U1TV2	25.32	47.35	31.78								
	Interoffice Transport-Dedicated-2W VG-Per Mile or Fraction Mile			UEPRX	U1TVM	0.0091	0.00	0.00								
	2-WIRE VOICE GRADE LOOP WITH 2-WIRE LINE PORT (BUS)															
	UNE Port/Loop Combination Rates															
	2W VG Loop/Port Combo-Zone 1					11.94										
	2W VG Loop/Port Combo-Zone 2					16.05										
	2W VG Loop/Port Combo-Zone 3					26.80										
	UNE Loop Rates															
	2W VG Loop (SL1)-Zone 1		1	UEPBX	UEPLX	9.77										
	2W VG Loop (SL1)-Zone 2		2	UEPBX	UEPLX	13.88										
	2W VG Loop (SL1)-Zone 3		3	UEPBX	UEPLX	24.63										
	2-Wire Voice Grade Line Port (Bus)															
	2W voice unbundled port w/o Caller ID-bus			UEPBX	UEPBL	2.17	53.31	26.46	27.50	8.37						
	2W voice unbundled port with Caller + E484 ID-bus			UEPBX	UEPBC	2.17	53.31	26.46	27.50	8.37						
	2W voice unbundled port outgoing only-bus			UEPBX	UEPBO	2.17	53.31	26.46	27.50	8.37						
	2W voice unbundled incoming only port with Caller ID-Bus			UEPBX	UEPB1	2.17	53.31	26.46	27.50	8.37						
	2W voice unbundled Incoming Only Port w/o Caller ID Capability			UEPBX	UEPBE	2.17	53.31	26.46	27.50	8.37						
	FEATURES															
	All Features Offered			UEPBX	UEPVF	2.26	0.00	0.00								
	NONRECURRING CHARGES (NRCs) - CURRENTLY COMBINED															
	2W VG Loop/Line Port Combination-Conversion-Switch-as-is			UEPBX	USAC2		0.102	0.102								

UNBUNDLED NETWORK ELEMENTS - Florida													Attachment: 2 Exh A			
CATEGORY	RATE ELEMENTS	Interim	Zone	BCS	USOC	RATES($)					Svc Order Submitted Elec per LSR	Svc Order Submitted Manually per LSR	Incremental Charge - Manual Svc Order vs. Electronic-1st	Incremental Charge - Manual Svc Order vs. Electronic-Add'l	Incremental Charge - Manual Svc Order vs. Electronic-Disc 1st	Incremental Charge - Manual Svc Order vs. Electronic-Disc Add'l
							Nonrecurring		NRC Disconnect		OSS Rates($)					
						Rec	First	Add'l	First	Add'l	SOMEC	SOMAN	SOMAN	SOMAN	SOMAN	SOMAN
	2W VG Loop/Line Port Combination -Conversion-Switch with change			UEPBX	USACC		0.102	0.102								
ADDITIONAL NRCs																
	2W VG Loop/Line Port Combination-Subsequent Activity			UEPBX	USAS2		0.00	0.00								
	Unbundled Misc Rate Element, Tag Loop at End User Premise			UEPBX	URETL		8.33	0.83								
OFF/ON PREMISES EXTENSION CHANNELS																
	2W Analog VG Extension Loop – Non-Design		1	UEPBX	UEAEN	10.69	49.57	22.83	25.62	6.57						
	2W Analog VG Extension Loop – Non-Design		2	UEPBX	UEAEN	15.20	49.57	22.83	25.62	6.57						
	2W Analog VG Extension Loop – Non-Design		3	UEPBX	UEAEN	26.97	49.57	22.83	25.62	6.57						
	2W Analog VG Extension Loop – Design		1	UEPBX	UEAED	12.24	135.75	82.47	63.53	12.01						
	2W Analog VG Extension Loop – Design		2	UEPBX	UEAED	17.40	135.75	82.47	63.53	12.01						
	2W Analog VG Extension Loop – Design		3	UEPBX	UEAED	30.87	135.75	82.47	63.53	12.01						
INTEROFFICE TRANSPORT																
	Interoffice Transport-Dedicated-2W VG-Facility Termination			UEPBX	U1TV2	25.32	47.35	31.78								
	Interoffice Transport-Dedicated-2W VG-Per Mile or Fraction Mile			UEPBX	U1TVM	0.0091	0.00	0.00								
2-WIRE VOICE GRADE LOOP WITH 2-WIRE LINE PORT (RES - PBX)																
UNE Port/Loop Combination Rates																
	2W VG Loop/Port Combo-Zone 1					11.94										
	2W VG Loop/Port Combo-Zone 2					16.05										
	2W VG Loop/Port Combo-Zone 3					26.80										
UNE Loop Rates																
	2W VG Loop (SL 1)-Zone 1		1	UEPRG	UEPLX	9.77										
	2W VG Loop (SL 1)-Zone 2		2	UEPRG	UEPLX	13.88										
	2W VG Loop (SL 1)-Zone 3		3	UEPRG	UEPLX	24.63										
2-Wire Voice Grade Line Port Rates (RES - PBX)																
	2W VG Unbundled Combination 2-Way PBX Trunk Port-Res			UEPRG	UEPRD	2.17	174.81	100.65	75.88	12.73						
FEATURES																
	All Features Offered			UEPRG	UEPVF	2.26	0.00	0.00								
NONRECURRING CHARGES (NRCs) - CURRENTLY COMBINED																
	2W VG Loop/ Line Port Combination (PBX)-Conversion-Switch-As-Is			UEPRG	USAC2		8.45	1.91								
	2W VG Loop/ Line Port Combination (PBX)-Conversion-Switch with Change			UEPRG	USACC		8.45	1.91								
ADDITIONAL NRCs																
	2W VG Loop/ Line Port Combination (PBX)-Subsequent Activity			UEPRG	USAS2	0.00	0.00	0.00								
	PBX Subsequent Activity-Change/Rearrange Multiline Hunt Group						7.86	7.86								
	Unbundled Misc Rate Element, Tag Loop at End User Premise			UEPRG	URETL		8.33	0.83								
OFF/ON PREMISES EXTENSION CHANNELS																
	Local Channel VG, per termination		1	UEPRG	P2JHX	12.24	135.75	82.47	63.53	12.01						
	Local Channel VG, per termination		2	UEPRG	P2JHX	17.40	135.75	82.47	63.53	12.01						
	Local Channel VG, per termination		3	UEPRG	P2JHX	30.87	135.75	82.47	63.53	12.01						
	Non-Wire Direct Serve Channel VG		1	UEPRG	SDD2X	12.92	120.38	43.56	95.00	10.54						
	Non-Wire Direct Serve Channel VG		2	UEPRG	SDD2X	18.36	120.38	43.56	95.00	10.54						
	Non-Wire Direct Serve Channel VG		3	UEPRG	SDD2X	32.58	120.38	43.56	95.00	10.54						
INTEROFFICE TRANSPORT																
	Interoffice Transport-Dedicated-2W VG-Facility Termination			UEPRG	U1TV2	25.32	47.35	31.78								
	Interoffice Transport-Dedicated-2W VG-Per Mile or Fraction Mile			UEPRG	U1TVM	0.0091	0.00	0.00								
2-WIRE VOICE GRADE LOOP WITH 2-WIRE LINE PORT (BUS - PBX)																
UNE Port/Loop Combination Rates																
	2W VG Loop/Port Combo-Zone 1					11.94										
	2W VG Loop/Port Combo-Zone 2					16.05										
	2W VG Loop/Port Combo-Zone 3					26.80										
UNE Loop Rates																
	2W VG Loop (SL 1)-Zone 1		1	UEPPX	UEPLX	9.77										
	2W VG Loop (SL 1)-Zone 2		2	UEPPX	UEPLX	13.88										
	2W VG Loop (SL 1)-Zone 3		3	UEPPX	UEPLX	24.63										
2-Wire Voice Grade Line Port Rates (BUS - PBX)																
	Line Side Unbundled Combination 2-Way PBX Trunk Port-Bus			UEPPX	UEPPC	2.17	174.81	100.65	75.88	12.73						
	Line Side Unbundled Outward PBX Trunk Port-Bus			UEPPX	UEPPO	2.17	174.81	100.65	75.88	12.73						
	Line Side Unbundled Incoming PBX Trunk Port-Bus			UEPPX	UEPP1	2.17	174.81	100.65	75.88	12.73						
	2W Voice Unbundled PBX LD Terminal Ports			UEPPX	UEPLD	2.17	174.81	100.65	75.88	12.73						

UNBUNDLED NETWORK ELEMENTS - Florida														Attachment: 2 Exh A			
CATEGORY	RATE ELEMENTS	Interim	Zone	BCS	USOC	RATES($)					Svc Order Submitted Elec per LSR	Svc Order Submitted Manually per LSR	Incremental Charge - Manual Svc Order vs. Electronic-1st	Incremental Charge - Manual Svc Order vs. Electronic-Add'l	Incremental Charge - Manual Svc Order vs. Electronic-Disc 1st	Incremental Charge - Manual Svc Order vs. Electronic-Disc Add'l
							Nonrecurring		NRC Disconnect				OSS Rates($)			
						Rec	First	Add'l	First	Add'l	SOMEC	SOMAN	SOMAN	SOMAN	SOMAN	SOMAN
	2W Voice Unbundled 2-Way Combination PBX Usage Port			UEPPX	UEPXA	2.17	174.81	100.65	75.88	12.73						
	2W Voice Unbundled PBX Toll Terminal Hotel Ports			UEPPX	UEPXB	2.17	174.81	100.65	75.88	12.73						
	2W Voice Unbundled PBX LD DDD Terminals Port			UEPPX	UEPXC	2.17	174.81	100.65	75.88	12.73						
	2W Voice Unbundled PBX LD Terminal Switchboard Port			UEPPX	UEPXD	2.17	174.81	100.65	75.88	12.73						
	2W Voice Unbundled PBX LD Terminal Switchboard IDD Capable Port			UEPPX	UEPXE	2.17	174.81	100.65	75.88	12.73						
	2W Voice Unbundled 2-Way PBX Hotel/Hospital Economy Administrative Calling Port			UEPPX	UEPXL	2.17	174.81	100.65	75.88	12.73						
	2W Voice Unbundled 2-Way PBX Hotel/Hospital Economy Rm Calling Port			UEPPX	UEPXM	2.17	174.81	100.65	75.88	12.73						
	2W Voice Unbundled 1-Way Outgoing PBX Hotel/Hospital Discount Rm Calling Port			UEPPX	UEPXO	2.17	174.81	100.65	75.88	12.73						
	2W Voice Unbundled 1-Way Outgoing PBX Measured Port			UEPPX	UEPXS	2.17	174.81	100.65	75.88	12.73						
FEATURES																
	All Features Offered			UEPPX	UEPVF	2.26	0.00	0.00								
NONRECURRING CHARGES (NRCs) - CURRENTLY COMBINED																
	2W VG Loop/ Line Port Combination (PBX)-Conversion-Switch-As-Is			UEPPX	USAC2		8.45	1.91								
	2W VG Loop/ Line Port Combination (PBX)-Conversion-Switch with Change			UEPPX	USACC		8.45	1.91								
ADDITIONAL NRCs																
	2W VG Loop/ Line Port Combination (PBX)-Subsequent Activity			UEPPX	USAS2	0.00	0.00	0.00								
	PBX Subsequent Activity-Change/Rearrange Multiline Hunt Group						7.86	7.86								
	Unbundled Misc Rate Element, Tag Loop at End User Premise			UEPPX	URETL		8.33	0.83								
OFF/ON PREMISES EXTENSION CHANNELS																
	Local Channel VG, per termination		1	UEPPX	P2JHX	12.24	135.75	82.47	63.53	12.01						
	Local Channel VG, per termination		2	UEPPX	P2JHX	17.40	135.75	82.47	63.53	12.01						
	Local Channel VG, per termination		3	UEPPX	P2JHX	30.87	135.75	82.47	63.53	12.01						
	Non-Wire Direct Serve Channel VG		1	UEPPX	SDD2X	12.92	120.38	43.56	95.00	10.54						
	Non-Wire Direct Serve Channel VG		2	UEPPX	SDD2X	18.36	120.38	43.56	95.00	10.54						
	Non-Wire Direct Serve Channel VG		3	UEPPX	SDD2X	32.58	120.38	43.56	95.00	10.54						
INTEROFFICE TRANSPORT																
	Interoffice Transport-Dedicated-2W VG-Facility Termination			UEPPX	U1TV2	25.32	47.35	31.78								
	Interoffice Transport-Dedicated-2W VG-Per Mile or Fraction Mile			UEPPX	U1TVM	0.0091	0.00	0.00								
2-WIRE VOICE GRADE LOOP WITH 2-WIRE ANALOG LINE COIN PORT																
UNE Port/Loop Combination Rates																
	2W VG Coin Port/Loop Combo – Zone 1					11.94										
	2W VG Coin Port/Loop Combo – Zone 2					16.05										
	2W VG Coin Port/Loop Combo – Zone 3					26.80										
UNE Loop Rates																
	2W VG Loop (SL1)-Zone 1		1	UEPCO	UEPLX	9.77										
	2W VG Loop (SL1)-Zone 2		2	UEPCO	UEPLX	13.88										
	2W VG Loop (SL1)-Zone 3		3	UEPCO	UEPLX	24.63										
2-Wire Voice Grade Line Ports (COIN)																
	2W Coin 2-Way with Operator Screening and Blocking: 011, 900/976, 1+DDD (FL)			UEPCO	UEP2F	2.17	53.31	26.46	27.50	8.37						
	2W Coin 2-Way with Operator Screening and 011 Blocking (FL)			UEPCO	UEPFA	2.17	53.31	26.46	27.50	8.37						
	2W Coin 2-Way with Operator Screening and Blocking: 900/976, 1+DDD, 011+, and Local (FL)			UEPCO	UEPCG	2.17	53.31	26.46	27.50	8.37						
	2W Coin Outward with Operator Screening and 011 Blocking (AL, FL)			UEPCO	UEPRK	2.17	53.31	26.46	27.50	8.37						
	2W Coin Outward with Operator Screening and Blocking: 900/976, 1+DDD, 011+ (FL)			UEPCO	UEPOF	2.17	53.31	26.46	27.50	8.37						
	2W Coin Outward with Operator Screening and Blocking: 900/976, 1+DDD, 011+, and Local (FL, GA)			UEPCO	UEPCQ	2.17	53.31	26.46	27.50	8.37						
	2W 2-Way Smartline with 900/976 (all states except LA)			UEPCO	UEPCK	2.17	53.31	26.46	27.50	8.37						
	2W Coin Outward Smartline with 900/976 (all states except LA)			UEPCO	UEPCR	2.17	53.31	26.46	27.50	8.37						
ADDITIONAL UNE COIN PORT/LOOP (RC)																
	UNE Coin Port/Loop Combo Usage (Flat Rate)			UEPCO	URECU	1.86	0.00	0.00	0.00	0.00						
NONRECURRING CHARGES - CURRENTLY COMBINED																

UNBUNDLED NETWORK ELEMENTS - Florida													Attachment: 2 Exh A			
CATEGORY	RATE ELEMENTS	Interim	Zone	BCS	USOC	RATES($)					Svc Order Submitted Elec per LSR	Svc Order Submitted Manually per LSR	Incremental Charge - Manual Svc Order vs. Electronic-1st	Incremental Charge - Manual Svc Order vs. Electronic-Add'l	Incremental Charge - Manual Svc Order vs. Electronic-Disc 1st	Incremental Charge - Manual Svc Order vs. Electronic-Disc Add'l
							Nonrecurring		NRC Disconnect				OSS Rates($)			
						Rec	First	Add'l	First	Add'l	SOMEC	SOMAN	SOMAN	SOMAN	SOMAN	SOMAN
	2W VG Loop/Line Port Combination -Conversion-Switch-as-is			UEPCO	USAC2		0.102	0.102								
	2W VG Loop/Line Port Combination -Conversion-Switch with change			UEPCO	USACC		0.102	0.102								
ADDITIONAL NRCs																
	2W VG Loop/Line Port Combination-Subsequent Activity			UEPCO	USAS2		0.00	0.00								
	Unbundled Misc Rate Element, Tag Loop at End User Premise			UEPCO	URETL		8.33	0.83								
2-WIRE VOICE LOOP/ 2WIRE VOICE GRADE IO TRANSPORT/ 2-WIRE LINE PORT (RES)																
UNE Port/Loop Combination Rates																
	2W VG Loop/IO Tranport/Port Combo-Zone 1					14.64										
	2W VG Loop/IO Tranport/Port Combo-Zone 2					19.80										
	2W VG Loop/IO Tranport/Port Combo-Zone 3					33.27										
UNE Loop Rates																
	2W VG Loop (SL2)-Zone 1		1	UEPFR	UECF2	12.24										
	2W VG Loop (SL2)-Zone 2		2	UEPFR	UECF2	17.40										
	2W VG Loop (SL2)-Zone 3		3	UEPFR	UECF2	30.87										
2-Wire Voice Grade Line Port Rates (Res)																
	2W voice unbundled port-residence			UEPFR	UEPRL	2.40	174.81	100.65	75.88	12.73						
	2W voice unbundled port with Caller ID-res			UEPFR	UEPRC	2.40	174.81	100.65	75.88	12.73						
	2W voice unbundled port outgoing only-res			UEPFR	UEPRO	2.40	174.81	100.65	75.88	12.73						
	2W voice unbundled FL Area Calling with Caller ID-res			UEPFR	UEPAF	2.40	174.81	100.65	75.88	12.73						
	2W voice unbundles res, low usage line port with Caller ID (LUM)			UEPFR	UEPAP	2.40	174.81	100.65	75.88	12.73						
INTEROFFICE TRANSPORT																
	Interoffice Transport-Dedicated-2W VG-Facility Termination			UEPFR	U1TV2	25.32	47.35	31.78								
	Interoffice Transport-Dedicated-2W VG-Per Mile or Fraction Mile			UEPFR	1L5XX	0.0091										
FEATURES																
	All Features Offered			UEPFR	UEPVF	2.26	0.00	0.00								
NONRECURRING CHARGES (NRCs) - CURRENTLY COMBINED																
	2W Loop/Dedicated IO Transport/2W Line Port Combination-Conversion-Switch-as-is			UEPFR	USAC2		16.97	3.73								
	2W Loop/Dedicated IO Transport/2W Line Port Combination-Conversion-Switch-With-Change			UEPFR	USACC		16.97	3.73								
	Unbundled Misc Rate Element, Tag Designed Loop at End User Premise			UEPFR	URETN		11.21	1.10								
2-WIRE VOICE LOOP/ 2WIRE VOICE GRADE IO TRANSPORT/ 2-WIRE LINE PORT (BUS)																
UNE Port/Loop Combination Rates																
	2W VG Loop/IO Tranport/Port Combo-Zone 1					14.64										
	2W VG Loop/IO Tranport/Port Combo-Zone 2					19.80										
	2W VG Loop/IO Tranport/Port Combo-Zone 3					33.27										
UNE Loop Rates																
	2W VG Loop (SL2)-Zone 1		1	UEPFB	UECF2	12.24										
	2W VG Loop (SL2)-Zone 2		2	UEPFB	UECF2	17.40										
	2W VG Loop (SL2)-Zone 3		3	UEPFB	UECF2	30.87										
2-Wire Voice Grade Line Port (Bus)																
	2W voice unbundled port w/o Caller ID-bus			UEPFB	UEPBL	2.40	174.81	100.65	75.88	12.73						
	2W voice unbundled port with Caller + E484 ID-bus			UEPFB	UEPBC	2.40	174.81	100.65	75.88	12.73						
	2W voice unbundled port outgoing only-bus			UEPFB	UEPBO	2.40	174.81	100.65	75.88	12.73						
	2W voice unbundled incoming only port with Caller ID-Bus			UEPFB	UEPB1	2.40	174.81	100.65	75.88	12.73						
INTEROFFICE TRANSPORT																
	Interoffice Transport-Dedicated-2W VG-Facility Termination			UEPFB	U1TV2	25.32	47.35	31.78								
	Interoffice Transport-Dedicated-2W VG-Per Mile or Fraction Mile			UEPFB	1L5XX	0.0091										
FEATURES																
	All Features Offered			UEPFB	UEPVF	2.26	0.00	0.00								
NONRECURRING CHARGES (NRCs) - CURRENTLY COMBINED																
	2W Loop/Dedicated IO Transport/2W Line Port Combination-Conversion-Switch-as-is			UEPFB	USAC2		16.97	3.73								
	2W Loop/Dedicated IO Transport/2W Line Port Combination-Conversion-Switch with change			UEPFB	USACC		16.97	3.73								
	Unbundled Misc Rate Element, Tag Designed Loop at End User Premise			UEPFB	URETN		11.21	1.10								
2-WIRE VOICE LOOP/ 2WIRE VOICE GRADE IO TRANSPORT/ 2-WIRE LINE PORT (PBX)																

UNBUNDLED NETWORK ELEMENTS - Florida														Attachment: 2 Exh A			
CATEGORY	RATE ELEMENTS	Interim	Zone	BCS	USOC	RATES($)					Svc Order Submitted Elec per LSR	Svc Order Submitted Manually per LSR	Incremental Charge - Manual Svc Order vs. Electronic-1st	Incremental Charge - Manual Svc Order vs. Electronic-Add'l	Incremental Charge - Manual Svc Order vs. Electronic-Disc 1st	Incremental Charge - Manual Svc Order vs. Electronic-Disc Add'l
							Nonrecurring		NRC Disconnect		OSS Rates($)					
						Rec	First	Add'l	First	Add'l	SOMEC	SOMAN	SOMAN	SOMAN	SOMAN	SOMAN
UNE Port/Loop Combination Rates																
	2W VG Loop/IO Tranport/Port Combo-Zone 1					14.64										
	2W VG Loop/IO Tranport/Port Combo-Zone 2					19.80										
	2W VG Loop/IO Tranport/Port Combo-Zone 3					33.27										
UNE Loop Rates																
	2W VG Loop (SL2)-Zone 1		1	UEPFP	UECF2	12.24										
	2W VG Loop (SL2)-Zone 2		2	UEPFP	UECF2	17.40										
	2W VG Loop (SL2)-Zone 3		3	UEPFP	UECF2	30.87										
2-Wire Voice Grade Line Port Rates (BUS - PBX)																
	Line Side Unbundled Combination 2-Way PBX Trunk Port-Bus			UEPFP	UEPPC	2.40	174.81	100.65	75.88	12.73						
	Line Side Unbundled Outward PBX Trunk Port-Bus			UEPFP	UEPPO	2.40	174.81	100.65	75.88	12.73						
	Line Side Unbundled Incoming PBX Trunk Port-Bus			UEPFP	UEPP1	2.40	174.81	100.65	75.88	12.73						
	2W Voice Unbundled PBX LD Terminal Ports			UEPFP	UEPLD	2.40	174.81	100.65	75.88	12.73						
	2W Voice Unbundled 2-Way Combination PBX Usage Port			UEPFP	UEPXA	2.40	174.81	100.65	75.88	12.73						
	2W Voice Unbundled PBX Toll Terminal Hotel Ports			UEPFP	UEPXB	2.40	174.81	100.65	75.88	12.73						
	2W Voice Unbundled PBX LD DDD Terminals Port			UEPFP	UEPXC	2.40	174.81	100.65	75.88	12.73						
	2W Voice Unbundled PBX LD Terminal Switchboard Port			UEPFP	UEPXD	2.40	174.81	100.65	75.88	12.73						
	2W Voice Unbundled PBX LD Terminal Switchboard IDD Capable Port			UEPFP	UEPXE	2.40	174.81	100.65	75.88	12.73						
	2W Voice Unbundled 2-Way PBX Hotel/Hospital Economy Administrative Calling Port			UEPFP	UEPXL	2.40	174.81	100.65	75.88	12.73						
	2W Voice Unbundled 2-Way PBX Hotel/Hospital Economy Rm Calling Port			UEPFP	UEPXM	2.40	174.81	100.65	75.88	12.73						
	2W Voice Unbundled 1-Way Outgoing PBX Hotel/Hospital Discount Rm Calling Port			UEPFP	UEPXO	2.40	174.81	100.65	75.88	12.73						
	2W Voice Unbundled 1-Way Outgoing PBX Measured Port			UEPFP	UEPXS	2.40	174.81	100.65	75.88	12.73						
INTEROFFICE TRANSPORT																
	Interoffice Transport-Dedicated-2W VG-Facility Termination			UEPFP	U1TV2	25.32	47.35	31.78								
	Interoffice Transport-Dedicated-2W VG-Per Mile or Fraction Mile			UEPFP	1L5XX	0.0091										
FEATURES																
	All Features Offered			UEPFP	UEPVF	2.26	0.00	0.00								
NONRECURRING CHARGES (NRCs) - CURRENTLY COMBINED																
	2W Loop/Dedicated IO Transport/2W Line Port Combination-Conversion-Switch-as-is			UEPFP	USAC2		16.97	3.73								
	2W Loop/Dedicated IO Transport/2W Line Port Combination-Conversion-Switch with change			UEPFP	USACC		16.97	3.73								
	Unbundled Misc Rate Element, Tag Designed Loop at End User Premise			UEPFP	URETN		11.21	1.10								
2-WIRE VOICE GRADE LOOP- BUS ONLY - WITH 2-WIRE DID TRUNK PORT																
UNE Port/Loop Combination Rates																
	2W VG Loop/2W DID Trunk Port Combo-UNE Zone 1					21.95										
	2W VG Loop/2W DID Trunk Port Combo-UNE Zone 2					27.11										
	2W VG Loop/2W DID Trunk Port Combo-UNE Zone 3					40.58										
UNE Loop Rates																
	2W Analog VG Loop- (SL2)-UNE Zone 1		1	UEPPX	UECD1	12.24										
	2W Analog VG Loop- (SL2)-UNE Zone 2		2	UEPPX	UECD1	17.40										
	2W Analog VG Loop- (SL2)-UNE Zone 3		3	UEPPX	UECD1	30.87										
UNE Port Rate																
	Exchange Ports-2W DID Port			UEPPX	UEPD1	9.71	214.16	98.29								
NONRECURRING CHARGES - CURRENTLY COMBINED																
	2W VG Loop/2W DID Trunk Port Combination -Switch-as-is			UEPPX	USAC1		7.85	1.87								
	2W VG Loop/2W DID Trunk Port Conversion with BellSouth Allowable Changes			UEPPX	USA1C		7.85	1.87								
ADDITIONAL NRCs																
	2W DID Subsequent Activity-Add Trunks, Per Trunk			UEPPX	USAS1		32.26	32.26								
	Unbundled Misc Rate Element, Tag Designed Loop at End User Premise			UEPPX	URETN		11.21	1.10								
Telephone Number/Trunk Group Establisment Charges																
	DID Trunk Termination (One Per Port)			UEPPX	NDT	0.00	0.00	0.00								

CATEGORY	RATE ELEMENTS	Interim	Zone	BCS	USOC	RATES($)					Svc Order Submitted Elec per LSR	Svc Order Submitted Manually per LSR	Incremental Charge - Manual Svc Order vs. Electronic-1st	Incremental Charge - Manual Svc Order vs. Electronic-Add'l	Incremental Charge - Manual Svc Order vs. Electronic-Disc 1st	Incremental Charge - Manual Svc Order vs. Electronic-Disc Add'l
							Nonrecurring		NRC Disconnect		OSS Rates($)					
						Rec	First	Add'l	First	Add'l	SOMEC	SOMAN	SOMAN	SOMAN	SOMAN	SOMAN
	DID Numbers, Establish Trunk Group and Provide First Group of 20 DID Numbers			UEPPX	NDZ	0.00	0.00	0.00								
	Additional DID Numbers for each Group of 20 DID Numbers			UEPPX	ND4	0.00	0.00	0.00								
	DID Numbers, Non- consecutive DID Numbers , Per Number			UEPPX	ND5	0.00	0.00	0.00								
	Reserve Non-Consecutive DID numbers			UEPPX	ND6	0.00	0.00	0.00								
	Reserve DID Numbers			UEPPX	NDV	0.00	0.00	0.00								
2-WIRE ISDN DIGITAL GRADE LOOP WITH 2-WIRE ISDN DIGITAL LINE SIDE PORT																
UNE Port/Loop Combination Rates																
	2W ISDN Digital Grade Loop/2W ISDN Digital Line Side Port -UNE Zone 1					23.63										
	2W ISDN Digital Grade Loop/2W ISDN Digital Line Side Port -UNE Zone 2					30.05										
	2W ISDN Digital Grade Loop/2W ISDN Digital Line Side Port -UNE Zone 3					46.84										
UNE Loop Rates																
	2W ISDN Digital Grade Loop-UNE Zone 1		1	UEPPB UEPPR	USL2X	15.25										
	2W ISDN Digital Grade Loop-UNE Zone 2		2	UEPPB UEPPR	USL2X	21.67										
	2W ISDN Digital Grade Loop-UNE Zone 3		3	UEPPB UEPPR	USL2X	38.46										
UNE Port Rate																
	Exchange Port-2W ISDN Line Side Port			UEPPR	UEPPR	8.38	194.52	145.09								
	Exchange Port-2W ISDN Line Side Port			UEPPB	UEPPB	8.38	194.52	145.09								
NONRECURRING CHARGES - CURRENTLY COMBINED																
	2W ISDN Digital Grade Loop/2W ISDN Line Side Port Combination-Conversion			UEPPB UEPPR	USACB	0.00	25.22	17.00								
ADDITIONAL NRCs																
	Unbundled Misc Rate Element, Tag Designed Loop at End User Premise			UEPPB UEPPR	URETN		11.21	1.10								
	Unbundled Misc Rate Element, Tag Loop at End User Premise			UEPPB UEPPR	URETL		8.33	0.83								
B-CHANNEL USER PROFILE ACCESS:																
	CVS/CSD (DMS/5ESS)			UEPPB UEPPR	U1UCA	0.00	0.00	0.00								
	CVS (EWSD)			UEPPB UEPPR	U1UCB	0.00	0.00	0.00								
	CSD			UEPPB UEPPR	U1UCC	0.00	0.00	0.00								
B-CHANNEL AREA PLUS USER PROFILE ACCESS: (AL,KY,LA,MS SC,MS, & TN)																
USER TERMINAL PROFILE																
	User Terminal Profile (EWSD only)			UEPPB UEPPR	U1UMA	0.00	0.00	0.00								
VERTICAL FEATURES																
	All Vertical Features-One per Channel B User Profile			UEPPB UEPPR	UEPVF	2.26	0.00	0.00								
INTEROFFICE CHANNEL MILEAGE																
	Interoffice Channel mileage each, including first mile and facilities termination			UEPPB UEPPR	M1GNC	25.3291	47.35	31.78	18.31	7.03						
	Interoffice Channel mileage each, additional mile			UEPPB UEPPR	M1GNM	0.0091	0.00	0.00								
UNBUNDLED CENTREX PORT/LOOP COMBINATIONS - COST BASED RATES																
UNE-P CENTREX - 1AESS - (Valid in AL,FL,GA,KY,LA,MS,&TN only)																
2-Wire VG Loop/2-Wire Voice Grade Port (Centrex) Combo																
UNE Port/Loop Combination Rates (Non-Design)																
	2W VG Loop/2W VG Port (Centrex) Port Combo-Non-Design					11.94										
	2W VG Loop/2W VG Port (Centrex)Port Combo-Non-Design					16.05										
	2W VG Loop/2W VG Port (Centrex)Port Combo-Non-Design					26.80										
UNE Port/Loop Combination Rates (Design)																
	2W VG Loop/2W VG Port (Centrex) Port Combo-Design					14.41										
	2W VG Loop/2W VG Port (Centrex)Port Combo-Design					19.57										
	2W VG Loop/2W VG Port (Centrex)Port Combo-Design					33.04										
UNE Loop Rate																
	2W VG Loop (SL 1)-Zone 1		1	UEP91	UECS1	9.77										
	2W VG Loop (SL 1)-Zone 2		2	UEP91	UECS1	13.88										
	2W VG Loop (SL 1)-Zone 3		3	UEP91	UECS1	24.63										
	2W VG Loop (SL 2)-Zone 1		1	UEP91	UECS2	12.24										
	2W VG Loop (SL 2)-Zone 2		2	UEP91	UECS2	17.40										

UNBUNDLED NETWORK ELEMENTS - Florida														Attachment: 2 Exh A			
CATEGORY		RATE ELEMENTS	Interim	Zone	BCS	USOC	RATES($)					Svc Order Submitted Elec per LSR	Svc Order Submitted Manually per LSR	Incremental Charge - Manual Svc Order vs. Electronic-1st	Incremental Charge - Manual Svc Order vs. Electronic-Add'l	Incremental Charge - Manual Svc Order vs. Electronic-Disc 1st	Incremental Charge - Manual Svc Order vs. Electronic-Disc Add'l
								Nonrecurring		NRC Disconnect		OSS Rates($)					
							Rec	First	Add'l	First	Add'l	SOMEC	SOMAN	SOMAN	SOMAN	SOMAN	SOMAN
		2W VG Loop (SL 2)-Zone 3		3	UEP91	UECS2	30.87										
	UNE Ports																
	All States (Except North Carolina and Sout Carolina)																
		2W VG Port (Centrex) Basic Local Area			UEP91	UEPYA	2.17	53.31	26.46	27.50	8.37						
		2W VG Port (Centrex 800 termination)Basic Local Area			UEP91	UEPYB	2.17	53.31	26.46	27.50	8.37						
		2W VG Port (Centrex with Caller ID)Note1 Basic Local Area			UEP91	UEPYH	2.17	53.31	26.46	27.50	8.37						
		2W VG Port (Centrex from diff SWC) Note 2, 3 Basic Local Area			UEP91	UEPYM	2.17	139.49	86.10	65.41	13.81						
		2W VG Port, Diff SWC-800 Service Term-Basic Local Area			UEP91	UEPYZ	2.17	139.49	86.10	65.41	13.81						
		2W VG Port terminated in on Megalink or equivalent-Basic Local Area			UEP91	UEPY9	2.17	53.31	26.46	27.50	8.37						
		2W VG Port Terminated on 800 Service Term-Basic Local Area			UEP91	UEPY2	2.17	53.31	26.46	27.50	8.37						
	Georgia and Florida Only						2.17										
		2W VG Port (Centrex)			UEP91	UEPHA	2.17	53.31	26.46	27.50	8.37						
		2W VG Port (Centrex 800 termination)			UEP91	UEPHB	2.17	53.31	26.46	27.50	8.37						
		2W VG Port (Centrex with Caller ID)1			UEP91	UEPHH	2.17	53.31	26.46	27.50	8.37						
		2W VG Port (Centrex from diff SWC)2,3			UEP91	UEPHM	2.17	139.49	86.10	65.41	13.81						
		2W VG Port, Diff SWC 2,3-800 Service Term			UEP91	UEPHZ	2.17	139.49	86.10	65.41	13.81						
		2W VG Port terminated in on Megalink or equivalent			UEP91	UEPH9	2.17	53.31	26.46	27.50	8.37						
		2W VG Port Terminated on 800 Service Term			UEP91	UEPH2	2.17	53.31	26.46	27.50	8.37						
	Local Switching																
		Centrex Intercom Funtionality, per port			UEP91	URECS	0.7384										
	Features																
		All Standard Features Offered, per port			UEP91	UEPVF	2.26										
		All Select Features Offered, per port			UEP91	UEPVS	0.00	370.70									
		All Centrex Control Features Offered, per port			UEP91	UEPVC	2.26										
	NARS																
		Unbundled Network Access Register-Combination			UEP91	UARCX	0.00	0.00	0.00	0.00	0.00						
		Unbundled Network Access Register-Indial			UEP91	UAR1X	0.00	0.00	0.00	0.00	0.00						
		Unbundled Network Access Register-Outdial			UEP91	UAROX	0.00	0.00	0.00	0.00	0.00						
	Misc Terminations																
	2-Wire Trunk Side																
		Trunk Side Terminations, each			UEP91	CENA6	8.73										
	Interoffice Channel Mileage - 2-Wire																
		Interoffice Channel Facilities Termination-VG			UEP91	M1GBC	25.32										
		Interoffice Channel mileage, per mile or fraction of mile			UEP91	M1GBM	0.0091										
	Feature Activations (DS0) Centrex Loops on Channelized DS1 Service																
	D4 Channel Bank Feature Activations																
		Feature Activation on D-4 Channel Bank Centrex Loop Slot			UEP91	1PQWS	0.66										
		Feature Activation on D-4 Channel Bank FX line Side Loop Slot			UEP91	1PQW6	0.66										
		Feature Activation on D-4 Channel Bank FX Trunk Side Loop Slot			UEP91	1PQW7	0.66										
		Feature Activation on D-4 Channel Bank Centrex Loop Slot-Different WC			UEP91	1PQWP	0.66										
		Feature Activation on D-4 Channel Bank Private Line Loop Slot			UEP91	1PQWV	0.66										
		Feature Activation on D-4 Channel Bank Tjie Line/Trunk Loop Slot			UEP91	1PQWQ	0.66										
		Feature Activation on D-4 Channel Bank WATS Loop Slot			UEP91	1PQWA	0.66										
	Non-Recurring Charges (NRC) Associated with UNE-P Centrex																
		Conversion-Currently Combined Switch-As-Is with allowed changes, per port			UEP91	USAC2		21.50	8.42								
		Conversion of Existing Centrex Common Block			UEP91	USACN		5.17	8.32								
		New Centrex Standard Common Block			UEP91	M1ACS	0.00	618.82									
		New Centrex Customized Common Block			UEP91	M1ACC	0.00	618.82									
		Secondary Block, per Block			UEP91	M2CC1	0.00	71.31									
		NAR Establishment Charge, Per Occasion			UEP91	URECA	0.00	66.48									
	UNE-P CENTREX - 5ESS (Valid in All States)																
	2-Wire VG Loop/2-Wire Voice Grade Port (Centrex) Combo																
	UNE Port/Loop Combination Rates (Non-Design)																
		2W VG Loop/2W VG Port (Centrex) Port Combo-Non-Design					11.94										
		2W VG Loop/2W VG Port (Centrex)Port Combo-Non-Design					16.05										
		2W VG Loop/2W VG Port (Centrex)Port Combo-Non-Design					26.80										

UNBUNDLED NETWORK ELEMENTS - Florida														Attachment: 2 Exh A			
CATEGORY		RATE ELEMENTS	Interim	Zone	BCS	USOC	RATES($)					Svc Order Submitted Elec per LSR	Svc Order Submitted Manually per LSR	Incremental Charge - Manual Svc Order vs. Electronic-1st	Incremental Charge - Manual Svc Order vs. Electronic-Add'l	Incremental Charge - Manual Svc Order vs. Electronic-Disc 1st	Incremental Charge - Manual Svc Order vs. Electronic-Disc Add'l
								Nonrecurring		NRC Disconnect		OSS Rates($)					
							Rec	First	Add'l	First	Add'l	SOMEC	SOMAN	SOMAN	SOMAN	SOMAN	SOMAN
	UNE Port/Loop Combination Rates (Design)																
		2W VG Loop/2W VG Port (Centrex) Port Combo-Design					14.41										
		2W VG Loop/2W VG Port (Centrex)Port Combo-Design					19.57										
		2W VG Loop/2W VG Port (Centrex)Port Combo-Design					33.04										
	UNE Loop Rate																
		2W VG Loop (SL 1)-Zone 1		1	UEP95	UECS1	9.77										
		2W VG Loop (SL 1)-Zone 2		2	UEP95	UECS1	13.88										
		2W VG Loop (SL 1)-Zone 3		3	UEP95	UECS1	24.63										
		2W VG Loop (SL 2)-Zone 1		1	UEP95	UECS2	12.24										
		2W VG Loop (SL 2)-Zone 2		2	UEP95	UECS2	17.40										
		2W VG Loop (SL 2)-Zone 3		3	UEP95	UECS2	30.87										
	UNE Port Rate																
	All States																
		2W VG Port (Centrex) Basic Local Area			UEP95	UEPYA	2.17	53.31	26.46	27.50	8.37						
		2W VG Port (Centrex 800 termination)			UEP95	UEPYB	2.17	53.31	26.46	27.50	8.37						
		2W VG Port (Centrex with Caller ID)1Basic Local Area			UEP95	UEPYH	2.17	53.31	26.46	27.50	8.37						
		2W VG Port (Centrex from diff SWC)2,3 Basic Local Area			UEP95	UEPYM	2.17	139.49	86.10	65.41	13.81						
		2W VG Port, Diff SWC 2,3-800 Service Term-Basic Local Area			UEP95	UEPYZ	2.17	139.49	86.10	65.41	13.81						
		2W VG Port terminated in on Megalink or equivalent-Basic Local Area			UEP95	UEPY9	2.17	53.31	26.46	27.50	8.37						
		2W VG Port Terminated on 800 Service Term-Basic Local Area			UEP95	UEPY2	2.17	53.31	26.46	27.50	8.37						
	AL, KY, LA, MS, SC, & TN Only						2.17										
	FL & GA Only						2.17										
		2W VG Port (Centrex)			UEP95	UEPHA	2.17	53.31	26.46	27.50	8.37						
		2W VG Port (Centrex 800 termination)			UEP95	UEPHB	2.17	53.31	26.46	27.50	8.37						
		2W VG Port (Centrex with Caller ID)1			UEP95	UEPHH	2.17	53.31	26.46	27.50	8.37						
		2W VG Port (Centrex from diff SWC)2,3			UEP95	UEPHM	2.17	139.49	86.10	65.41	13.81						
		2W VG Port, Diff SWC-800 Service Term 2,3			UEP95	UEPHZ	2.17	139.49	86.10	65.41	13.81						
		2W VG Port terminated in on Megalink or equivalent			UEP95	UEPH9	2.17	53.31	26.46	27.50	8.37						
		2W VG Port Terminated on 800 Service Term			UEP95	UEPH2	2.17	53.31	26.46	27.50	8.37						
	Local Switching																
		Centrex Intercom Funtionality, per port			UEP95	URECS	0.7384										
	Features																
		All Standard Features Offered, per port			UEP95	UEPVF	2.26										
		All Select Features Offered, per port			UEP95	UEPVS	0.00	370.70									
		All Centrex Control Features Offered, per port			UEP95	UEPVC	2.26										
	NARS																
		Unbundled Network Access Register-Combination			UEP95	UARCX	0.00	0.00	0.00	0.00	0.00						
		Unbundled Network Access Register-Indial			UEP95	UAR1X	0.00	0.00	0.00	0.00	0.00						
		Unbundled Network Access Register-Outdial			UEP95	UAROX	0.00	0.00	0.00	0.00	0.00						
	Misc Terminations																
	2-Wire Trunk Side																
		Trunk Side Terminations, each			UEP95	CEND6	8.73										
	4-Wire Digital (1.544 Megabits)																
		DS1 Circuit Terminations, each			UEP95	M1HD1	54.95										
		DS0 Channels Activated, each			UEP95	M1HDO	0.00	15.69									
	Interoffice Channel Mileage - 2-Wire																
		Interoffice Channel Facilities Termination			UEP95	M1GBC	25.32										
		Interoffice Channel mileage, per mile or fraction of mile			UEP95	M1GBM	0.0091										
	Feature Activations (DS0) Centrex Loops on Channelized DS1 Service																
	D4 Channel Bank Feature Activations																
		Feature Activation on D-4 Channel Bank Centrex Loop Slot			UEP95	1PQWS	0.66										
		Feature Activation on D-4 Channel Bank FX line Side Loop Slot			UEP95	1PQW6	0.66										
		Feature Activation on D-4 Channel Bank FX Trunk Side Loop Slot			UEP95	1PQW7	0.66										
		Feature Activation on D-4 Channel Bank Centrex Loop Slot-Different WC			UEP95	1PQWP	0.66										
		Feature Activation on D-4 Channel Bank Private Line Loop Slot			UEP95	1PQWV	0.66										
		Feature Activation on D-4 Channel Bank Tjie Line/Trunk Loop Slot			UEP95	1PQWQ	0.66										
		Feature Activation on D-4 Channel Bank WATS Loop Slot			UEP95	1PQWA	0.66										

UNBUNDLED NETWORK ELEMENTS - Florida														Attachment: 2 Exh A			
CATEGORY		RATE ELEMENTS	Interim	Zone	BCS	USOC	RATES($)					Svc Order Submitted Elec per LSR	Svc Order Submitted Manually per LSR	Incremental Charge - Manual Svc Order vs. Electronic-1st	Incremental Charge - Manual Svc Order vs. Electronic-Add'l	Incremental Charge - Manual Svc Order vs. Electronic-Disc 1st	Incremental Charge - Manual Svc Order vs. Electronic-Disc Add'l
								Nonrecurring		NRC Disconnect				OSS Rates($)			
							Rec	First	Add'l	First	Add'l	SOMEC	SOMAN	SOMAN	SOMAN	SOMAN	SOMAN
	Non-Recurring Charges (NRC) Associated with UNE-P Centrex																
		NRC Conversion Currently Combined Switch-As-Is with allowed changes, per port			UEP95	USAC2	0.00	21.50	8.42								
		Conversion of Existing Centrex Common Block, each			UEP95	USACN		5.17	8.32								
		New Centrex Standard Common Block			UEP95	M1ACS	0.00	618.82									
		New Centrex Customized Common Block			UEP95	M1ACC	0.00	618.82									
		NAR Establishment Charge, Per Occasion			UEP95	URECA	0.00	66.48									
	Additional Non-Recurring Charges (NRC)																
		Unbundled Misc Rate Element, Tag Loop at End Use Premise			UEP95	URETL		8.33	0.83								
		Unbundled Misc Rate Element, Tag Design Loop at End Use Premise			UEP95	URETN		11.21	1.10								
	UNE-P CENTREX - DMS100 (Valid in All States)																
	2-Wire VG Loop/2-Wire Voice Grade Port (Centrex) Combo																
	UNE Port/Loop Combination Rates (Non-Design)																
		2W VG Loop/2W VG Port (Centrex) Port Combo-Non-Design					11.94										
		2W VG Loop/2W VG Port (Centrex)Port Combo-Non-Design					16.05										
		2W VG Loop/2W VG Port (Centrex)Port Combo-Non-Design					26.80										
	UNE Port/Loop Combination Rates (Design)																
		2W VG Loop/2W VG Port (Centrex) Port Combo-Design					14.41										
		2W VG Loop/2W VG Port (Centrex)Port Combo-Design					19.57										
		2W VG Loop/2W VG Port (Centrex)Port Combo-Design					33.04										
	UNE Loop Rate																
		2W VG Loop (SL 1)-Zone 1		1	UEP9D	UECS1	9.77										
		2W VG Loop (SL 1)-Zone 2		2	UEP9D	UECS1	13.88										
		2W VG Loop (SL 1)-Zone 3		3	UEP9D	UECS1	24.63										
		2W VG Loop (SL 2)-Zone 1		1	UEP9D	UECS2	12.24										
		2W VG Loop (SL 2)-Zone 2		2	UEP9D	UECS2	17.40										
		2W VG Loop (SL 2)-Zone 3		3	UEP9D	UECS2	30.87										
	UNE Port Rate																
	ALL STATES																
		2W VG Port (Centrex) Basic Local Area			UEP9D	UEPYA	2.17										
		2W VG Port (Centrex 800 termination)Basic Local Area			UEP9D	UEPYB	2.17	53.31	26.46	27.50	8.37						
		2W VG Port (Centrex/EBS-PSET)3Basic Local Area			UEP9D	UEPYC	2.17	53.31	26.46	27.50	8.37						
		2W VG Port (Centrex /EBS-M5009)3Basic Local Area			UEP9D	UEPYD	2.17	53.31	26.46	27.50	8.37						
		2W VG Port (Centrex /EBS-M5209))3 Basic Local Area			UEP9D	UEPYE	2.17	53.31	26.46	27.50	8.37						
		2W VG Port (Centrex /EBS-M5112))3 Basic Local Area			UEP9D	UEPYF	2.17	53.31	26.46	27.50	8.37						
		2W VG Port (Centrex /EBS-M5312))3Basic Local Area			UEP9D	UEPYG	2.17	53.31	26.46	27.50	8.37						
		2W VG Port (Centrex /EBS-M5008))3 Basic Local Area			UEP9D	UEPYT	2.17	53.31	26.46	27.50	8.37						
		2W VG Port (Centrex/EBS-M5208))3 Basic Local Area			UEP9D	UEPYU	2.17	53.31	26.46	27.50	8.37						
		2W VG Port (Centrex/EBS-M5216))3 Basic Local Area			UEP9D	UEPYV	2.17	53.31	26.46	27.50	8.37						
		2W VG Port (Centrex/EBS-M5316))3 Basic Local Area			UEP9D	UEPY3	2.17	53.31	26.46	27.50	8.37						
		2W VG Port (Centrex with Caller ID) Basic Local Area			UEP9D	UEPYH	2.17	53.31	26.46	27.50	8.37						
		2W VG Port (Centrex/Caller ID/Msg Wtg Lamp Indication))4 Basic Local Area			UEP9D	UEPYW	2.17	53.31	26.46	27.50	8.37						
		2W VG Port (Centrex/Msg Wtg Lamp Indication))4 Basic Local Area			UEP9D	UEPYJ	2.17	53.31	26.46	27.50	8.37						
		2W VG Port (Centrex from diff SWC) 2,3-Basic Local Area			UEP9D	UEPYM	2.17	53.31	26.46	27.50	8.37						
		2W VG Port (Centrex/differ SWC /EBS-PSET)2,3,4 Basic Local Area			UEP9D	UEPYO	2.17	53.31	26.46	27.50	8.37						
		2W VG Port (Centrex/differ SWC /EBS-M5009)2,3,4 Basic Local Area			UEP9D	UEPYP	2.17	53.31	26.46	27.50	8.37						
		2W VG Port (Centrex/differ SWC /EBS-5209)2,3,4 Basic Local Area			UEP9D	UEPYQ	2.17	139.49	86.10	65.41	13.81						
		2W VG Port (Centrex/differ SWC /EBS-M5112)2,3,4 Basic Local Area			UEP9D	UEPYR	2.17	139.49	86.10	65.41	13.81						
		2W VG Port (Centrex/differ SWC /EBS-M5312)2,3,4 Basic Local Area			UEP9D	UEPYS	2.17	139.49	86.10	65.41	13.81						
		2W VG Port (Centrex/differ SWC /EBS-M5008)2,3,4 Basic Local Area			UEP9D	UEPY4	2.17	139.49	86.10	65.41	13.81						
		2W VG Port (Centrex/differ SWC /EBS-M5208)2, 3 Basic Local Area			UEP9D	UEPY5	2.17	139.49	86.10	65.41	13.81						
		2W VG Port (Centrex/differ SWC /EBS-M5216)2,3,4 Basic Local Area			UEP9D	UEPY6	2.17	139.49	86.10	65.41	13.81						

UNBUNDLED NETWORK ELEMENTS - Florida														Attachment: 2 Exh A			
CATEGORY		RATE ELEMENTS	Interim	Zone	BCS	USOC	RATES($)					Svc Order Submitted Elec per LSR	Svc Order Submitted Manually per LSR	Incremental Charge - Manual Svc Order vs. Electronic-1st	Incremental Charge - Manual Svc Order vs. Electronic-Add'l	Incremental Charge - Manual Svc Order vs. Electronic-Disc 1st	Incremental Charge - Manual Svc Order vs. Electronic-Disc Add'l
								Nonrecurring		NRC Disconnect		OSS Rates($)					
							Rec	First	Add'l	First	Add'l	SOMEC	SOMAN	SOMAN	SOMAN	SOMAN	SOMAN
		2W VG Port (Centrex/differ SWC /EBS-M5316)2,3,4 Basic Local Area			UEP9D	UEPY7	2.17	139.49	86.10	65.41	13.81						
		2W VG Port, Diff SWC-800 Service Term 2,3			UEP9D	UEPYZ	2.17	139.49	86.10	65.41	13.81						
		2W VG Port terminated in on Megalink or equivalent Basic Local Area			UEP9D	UEPY9	2.17	53.31	26.46	27.50	8.37						
		2W VG Port Terminated on 800 Service Term Basic Local Area			UEP9D	UEPY2	2.17	53.31	26.46	27.50	8.37						
	FL & GA Only						2.17										
		2W VG Port (Centrex)			UEP9D	UEPHA	2.17	53.31	26.46	27.50	8.37						
		2W VG Port (Centrex 800 termination)			UEP9D	UEPHB	2.17	53.31	26.46	27.50	8.37						
		2W VG Port (Centrex/EBS-PSET)4			UEP9D	UEPHC	2.17	53.31	26.46	27.50	8.37						
		2W VG Port (Centrex /EBS-M5009)4			UEP9D	UEPHD	2.17	53.31	26.46	27.50	8.37						
		2W VG Port (Centrex /EBS-M5209)4			UEP9D	UEPHE	2.17	53.31	26.46	27.50	8.37						
		2W VG Port (Centrex /EBS-M5112)4			UEP9D	UEPHF	2.17	53.31	26.46	27.50	8.37						
		2W VG Port (Centrex /EBS-M5312)4			UEP9D	UEPHG	2.17	53.31	26.46	27.50	8.37						
		2W VG Port (Centrex /EBS-M5008)4			UEP9D	UEPHT	2.17	53.31	26.46	27.50	8.37						
		2W VG Port (Centrex/EBS-M5208)4			UEP9D	UEPHU	2.17	53.31	26.46	27.50	8.37						
		2W VG Port (Centrex/EBS-M5216)4			UEP9D	UEPHV	2.17	53.31	26.46	27.50	8.37						
		2W VG Port (Centrex/EBS-M5316)4			UEP9D	UEPH3	2.17	53.31	26.46	27.50	8.37						
		2W VG Port (Centrex with Caller ID)			UEP9D	UEPHH	2.17	53.31	26.46	27.50	8.37						
		2W VG Port (Centrex/Caller ID/Msg Wtg Lamp Indication)4			UEP9D	UEPHW	2.17	53.31	26.46	27.50	8.37						
		2W VG Port (Centrex/Msg Wtg Lamp Indication)4			UEP9D	UEPHJ	2.17	53.31	26.46	27.50	8.37						
		2W VG Port (Centrex from diff SWC) 2,3			UEP9D	UEPHM	2.17	139.49	86.10	65.41	13.81						
		2W VG Port (Centrex/differ SWC /EBS-PSET)2,3,4			UEP9D	UEPHO	2.17	139.49	86.10	65.41	13.81						
		2W VG Port (Centrex/differ SWC /EBS-M5009)2,3,4			UEP9D	UEPHP	2.17	139.49	86.10	65.41	13.81						
		2W VG Port (Centrex/differ SWC /EBS-5209)2,3,4			UEP9D	UEPHQ	2.17	139.49	86.10	65.41	13.81						
		2W VG Port (Centrex/differ SWC /EBS-M5112)2,3,4			UEP9D	UEPHR	2.17	139.49	86.10	65.41	13.81						
		2W VG Port (Centrex/differ SWC /EBS-M5312)2, 3,4			UEP9D	UEPHS	2.17	139.49	86.10	65.41	13.81						
		2W VG Port (Centrex/differ SWC /EBS-M5008)2,3,4			UEP9D	UEPH4	2.17	139.49	86.10	65.41	13.81						
		2W VG Port (Centrex/differ SWC /EBS-M5208)2,3,4			UEP9D	UEPH5	2.17	139.49	86.10	65.41	13.81						
		2W VG Port (Centrex/differ SWC /EBS-M5216)2,3,4			UEP9D	UEPH6	2.17	139.49	86.10	65.41	13.81						
		2W VG Port (Centrex/differ SWC /EBS-M5316)2,3,4			UEP9D	UEPH7	2.17	139.49	86.10	65.41	13.81						
		2W VG Port, Diff SWC-800 Service Term 2,3			UEP9D	UEPHZ	2.17	139.49	86.10	65.41	13.81						
		2W VG Port terminated in on Megalink or equivalent			UEP9D	UEPH9	2.17	53.31	26.46	27.50	8.37						
		2W VG Port Terminated on 800 Service Term			UEP9D	UEPH2	2.17	53.31	26.46	27.50	8.37						
	Local Switching																
		Centrex Intercom Funtionality, per port			UEP9D	URECS	0.7384										
	Features																
		All Standard Features Offered, per port			UEP9D	UEPVF	2.26										
		All Select Features Offered, per port			UEP9D	UEPVS	0.00	370.70									
		All Centrex Control Features Offered, per port			UEP9D	UEPVC	2.26										
	NARS																
		Unbundled Network Access Register-Combination			UEP9D	UARCX	0.00	0.00	0.00	0.00	0.00						
		Unbundled Network Access Register-Inward			UEP9D	UAR1X	0.00	0.00	0.00	0.00	0.00						
		Unbundled Network Access Register-Outdial			UEP9D	UAROX	0.00	0.00	0.00	0.00	0.00						
	Misc Terminations																
	2-Wire Trunk Side																
		Trunk Side Terminations, each			UEP9D	CEND6	8.73										
	4-Wire Digital (1.544 Megabits)																
		DS1 Circuit Terminations, each			UEP9D	M1HD1	54.95										
		DS0 Channels Activiated per Channel			UEP9D	M1HDO	0.00	15.69									
	Interoffice Channel Mileage - 2-Wire																
		Interoffice Channel Facilities Termination			UEP9D	M1GBC	25.32										
		Interoffice Channel mileage, per mile or fraction of mile			UEP9D	M1GBM	0.0091										
	Feature Activations (DS0) Centrex Loops on Channelized DS1 Service																
	D4 Channel Bank Feature Activations																
		Feature Activation on D-4 Channel Bank Centrex Loop Slot			UEP9D	1PQWS	0.66										
		Feature Activation on D-4 Channel Bank FX line Side Loop Slot			UEP9D	1PQW6	0.66										
		Feature Activation on D-4 Channel Bank FX Trunk Side Loop Slot			UEP9D	1PQW7	0.66										

UNBUNDLED NETWORK ELEMENTS - Florida														Attachment: 2 Exh A			
CATEGORY		RATE ELEMENTS	Interim	Zone	BCS	USOC	RATES($)					Svc Order Submitted Elec per LSR	Svc Order Submitted Manually per LSR	Incremental Charge - Manual Svc Order vs. Electronic-1st	Incremental Charge - Manual Svc Order vs. Electronic-Add'l	Incremental Charge - Manual Svc Order vs. Electronic-Disc 1st	Incremental Charge - Manual Svc Order vs. Electronic-Disc Add'l
								Nonrecurring		NRC Disconnect				OSS Rates($)			
							Rec	First	Add'l	First	Add'l	SOMEC	SOMAN	SOMAN	SOMAN	SOMAN	SOMAN
		Feature Activation on D-4 Channel Bank Centrex Loop Slot-Different WC			UEP9D	1PQWP	0.66										
		Feature Activation on D-4 Channel Bank Private Line Loop Slot			UEP9D	1PQWV	0.66										
		Feature Activation on D-4 Channel Bank Tjie Line/Trunk Loop Slot			UEP9D	1PQWQ	0.66										
		Feature Activation on D-4 Channel Bank WATS Loop Slot			UEP9D	1PQWA	0.66										
	Non-Recurring Charges (NRC) Associated with UNE-P Centrex																
		NRC Conversion Currently Combined Switch-As-Is with allowed changes, per port			UEP9D	USAC2		21.50	8.42								
		Conversion of existing Centrex Common Block, each			UEP9D	USACN		5.17	8.32								
		New Centrex Standard Common Block			UEP9D	M1ACS	0.00	618.82									
		New Centrex Customized Common Block			UEP9D	M1ACC	0.00	618.82									
		NAR Establishment Charge, Per Occasion			UEP9D	URECA	0.00	66.48									
	Additional Non-Recurring Charges (NRC)																
		Unbundled Misc Rate Element, Tag Loop at End Use Premise			UEP9D	URETL		8.33	0.83								
		Unbundled Misc Rate Element, Tag Design Loop at End Use Premise			UEP9D	URETN		11.21	1.10								
	UNE-P CENTREX - EWSD (Valid in AL, FL, KY, LA, MS & TN)																
	2-Wire VG Loop/2-Wire Voice Grade Port (Centrex) Combo																
	UNE Port/Loop Combination Rates (Non-Design)																
		2W VG Loop/2W VG Port (Centrex) Port Combo-Non-Design					11.94										
		2W VG Loop/2W VG Port (Centrex)Port Combo-Non-Design					16.05										
		2W VG Loop/2W VG Port (Centrex)Port Combo-Non-Design					26.80										
	UNE Port/Loop Combination Rates (Design)																
		2W VG Loop/2W VG Port (Centrex) Port Combo-Design					14.41										
		2W VG Loop/2W VG Port (Centrex)Port Combo-Design					19.57										
		2W VG Loop/2W VG Port (Centrex)Port Combo-Design					33.04										
	UNE Loop Rate																
		2W VG Loop (SL 1)-Zone 1		1	UEP9E	UECS1	9.77										
		2W VG Loop (SL 1)-Zone 2		2	UEP9E	UECS1	13.88										
		2W VG Loop (SL 1)-Zone 3		3	UEP9E	UECS1	24.63										
		2W VG Loop (SL 2)-Zone 1		1	UEP9E	UECS2	12.24										
		2W VG Loop (SL 2)-Zone 2		2	UEP9E	UECS2	17.40										
		2W VG Loop (SL 2)-Zone 3		3	UEP9E	UECS2	30.87										
	UNE Port Rate																
	AL, FL, KY, LA, MS, & TN only																
		2W VG Port (Centrex) Basic Local Area			UEP9E	UEPYA	2.17	53.31	26.46	27.50	8.37						
		2W VG Port (Centrex 800 termination)Basic Local Area			UEP9E	UEPYB	2.17	53.31	26.46	27.50	8.37						
		2W VG Port (Centrex with Caller ID)1Basic Local Area			UEP9E	UEPYH	2.17	53.31	26.46	27.50	8.37						
		2W VG Port (Centrex from diff SWC)2,3 Basic Local Area			UEP9E	UEPYM	2.17	139.49	86.10	65.41	13.81						
		2W VG Port, Diff SWC 2,3-800 Service Term-Basic Local Area			UEP9E	UEPYZ	2.17	139.49	86.10	65.41	13.81						
		2W VG Port terminated in on Megalink or equivalent-Basic Local Area			UEP9E	UEPY9	2.17	53.31	26.46	27.50	8.37						
		2W VG Port Terminated on 800 Service Term-Basic Local Area			UEP9E	UEPY2	2.17	53.31	26.46	27.50	8.37						
	Florida Only						2.17										
		2W VG Port (Centrex)			UEP9E	UEPHA	2.17	53.31	26.46	27.50	8.37						
		2W VG Port (Centrex 800 termination)			UEP9E	UEPHB	2.17	53.31	26.46	27.50	8.37						
		2W VG Port (Centrex with Caller ID)1			UEP9E	UEPHH	2.17	53.31	26.46	27.50	8.37						
		2W VG Port (Centrex from diff SWC)2,3			UEP9E	UEPHM	2.17	139.49	86.10	65.41	13.81						
		2W VG Port, Diff SWC-800 Service Term 2,3			UEP9E	UEPHZ	2.17	139.49	86.10	65.41	13.81						
		2W VG Port terminated in on Megalink or equivalent			UEP9E	UEPH9	2.17	53.31	26.46	27.50	8.37						
		2W VG Port Terminated on 800 Service Term			UEP9E	UEPH2	2.17	53.31	26.46	27.50	8.37						
	Local Switching																
		Centrex Intercom Funtionality, per port			UEP9E	URECS	0.7384										
	Features																
		All Standard Features Offered, per port			UEP9E	UEPVF	2.26										
		All Select Features Offered, per port			UEP9E	UEPVS	0.00	370.70									
		All Centrex Control Features Offered, per port			UEP9E	UEPVC	2.26										
	NARS																
		Unbundled Network Access Register-Combination			UEP9E	UARCX	0.00	0.00	0.00	0.00	0.00						

UNBUNDLED NETWORK ELEMENTS - Florida														Attachment: 2 Exh A			
CATEGORY	RATE ELEMENTS	Interim	Zone	BCS	USOC	RATES($)					Svc Order Submitted Elec per LSR	Svc Order Submitted Manually per LSR	Incremental Charge - Manual Svc Order vs. Electronic-1st	Incremental Charge - Manual Svc Order vs. Electronic-Add'l	Incremental Charge - Manual Svc Order vs. Electronic-Disc 1st	Incremental Charge - Manual Svc Order vs. Electronic-Disc Add'l
							Nonrecurring		NRC Disconnect		OSS Rates($)					
						Rec	First	Add'l	First	Add'l	SOMEC	SOMAN	SOMAN	SOMAN	SOMAN	SOMAN
	Unbundled Network Access Register-Indial			UEP9E	UAR1X	0.00	0.00	0.00	0.00	0.00						
	Unbundled Network Access Register-Outdial			UEP9E	UAROX	0.00	0.00	0.00	0.00	0.00						
Misc Terminations																
2-Wire Trunk Side																
	Trunk Side Terminations, each			UEP9E	CEND6	8.73										
4-Wire Digital (1.544 Megabits)																
	DS1 Circuit Terminations, each			UEP9E	M1HD1	54.95										
	DS0 Channel Activated Per Channel			UEP9E	M1HDO	0.00	15.69									
Interoffice Channel Mileage - 2-Wire																
	Interoffice Channel Facilities Termination			UEP9E	M1GBC	25.32										
	Interoffice Channel mileage, per mile or fraction of mile			UEP9E	M1GBM	0.0091										
Feature Activations (DS0) Centrex Loops on Channelized DS1 Service																
D4 Channel Bank Feature Activations																
	Feature Activation on D-4 Channel Bank Centrex Loop Slot			UEP9E	1PQWS	0.66										
	Feature Activation on D-4 Channel Bank FX line Side Loop Slot			UEP9E	1PQW6	0.66										
	Feature Activation on D-4 Channel Bank FX Trunk Side Loop Slot			UEP9E	1PQW7	0.66										
	Feature Activation on D-4 Channel Bank Centrex Loop Slot-Different WC			UEP9E	1PQWP	0.66										
	Feature Activation on D-4 Channel Bank Private Line Loop Slot			UEP9E	1PQWV	0.66										
	Feature Activation on D-4 Channel Bank Tjie Line/Trunk Loop Slot			UEP9E	1PQWQ	0.66										
	Feature Activation on D-4 Channel Bank WATS Loop Slot			UEP9E	1PQWA	0.66										
Non-Recurring Charges (NRC) Associated with UNE-P Centrex																
	NRC Conversion Currently Combined Switch-As-Is with allowed changes, per port			UEP9E	USAC2		21.50	8.42								
	Conversion of Existing Centrex Common Block, each			UEP9E	USACN		5.17	8.32								
	New Centrex Standard Common Block			UEP9E	M1ACS	0.00	618.82									
	New Centrex Customized Common Block			UEP9E	M1ACC	0.00	618.82									
	NAR Establishment Charge, Per Occasion			UEP9E	URECA	0.00	66.48									
Additional Non-Recurring Charges (NRC)																
	Unbundled Misc Rate Element, Tag Loop at End Use Premise			UEP9E	URETL		8.33	0.83								
	Unbundled Misc Rate Element, Tag Design Loop at End Use Premise			UEP9E	URETN		11.21	1.10								
Note 1 - Required Port for Centrex Control in 1AESS, 5ESS & EWSD																
Note 2 - Requres Interoffice Channel Mileage																
Note 3 - Installation is combination of Installation charge for SL2 Loop and Port																
Note 4 - Requires Specific Customer Premises Equipment																
Note: Rates displaying an "I" in Interim column are interim as a result of a Commission order.																

UNBUNDLED NETWORK ELEMENTS - Georgia														Attachment: 2 Exh A			
CATEGORY		RATE ELEMENTS	Interim	Zone	BCS	USOC	RATES($)					Svc Order Submitted Elec per LSR	Svc Order Submitted Manually per LSR	Incremental Charge - Manual Svc Order vs. Electronic-1st	Incremental Charge - Manual Svc Order vs. Electronic-Add'l	Incremental Charge - Manual Svc Order vs. Electronic-Disc 1st	Incremental Charge - Manual Svc Order vs. Electronic-Disc Add'l
								Nonrecurring		NRC Disconnect		OSS Rates($)					
							Rec	First	Add'l	First	Add'l	SOMEC	SOMAN	SOMAN	SOMAN	SOMAN	SOMAN
	The "Zone" shown in the sections for stand-alone loops or loops as part of a combination refers to Geographically Deaveraged UNE Zones. To view Geographically Deaveraged UNE Zone Designations by Central Office, refer to internet Website: http://www.interconnection.bellsouth.com/become_a_clec/html/interconnection.htm																
OPERATIONS SUPPORT SYSTEMS (OSS) - "REGIONAL RATES"																	
	NOTE: (1) CLEC should contact its contract negotiator if it prefers the "state specific" OSS charges as ordered by the State Commissions. The OSS charges currently contained in this rate exhibit are the BellSouth "regional" service ordering charges. CLEC may elect either the state specific Commission ordered rates for the service ordering charges, or CLEC may elect the regional service ordering charge, however, CLEC can not obtain a mixture of the two regardless if CLEC has a interconnection contract																
	NOTE: (2) Any element that can be ordered electronically will be billed according to the SOMEC rate listed in this category. Please refer to BellSouth's Local Ordering Handbook (LOH) to determine if a product can be ordered electronically. For those elements that cannot be ordered electronically at present per the LOH, the listed SOMEC rate in this category reflects the charge that would be billed to a CLEC once electronic ordering capabilities come on-line for that element. Otherwise, the manual																
		OSS-Electronic Service Order Charge, Per Local Service Request (LSR)-UNE Only				SOMEC		3.50	0.00	3.50	0.00						
		OSS-Manual Service Order Charge, Per Local Service Request (LSR)-UNE Only				SOMAN		11.73	0.00	6.13	0.00						
UNE SERVICE DATE ADVANCEMENT CHARGE																	
	NOTE: The Expedite charge will be maintained commensurate with BellSouth's FCC No.1 Tariff, Section 5 as applicable.																
		UNE Expedite Charge per Circuit or Line Assignable USOC, per Day			UAL, UEANL, UCL, UEF, UDC, UDF, UEQ, UDL, UENTW, UDN, UEA, UHL, ULC, USL, U1T12, U1T48, U1TD1, U1TD3, U1TDX, U1TO3, U1TS1, U1TVX, UC1BC, UC1BL, UC1CC, UC1CL, UC1DC, UC1DL, UC1EC, UC1EL, UC1FC, UC1FL, UC1GC, UC1GL, UC1HC, UC1HL, UDL12, UDL48, UDLO3, UDLSX, UE3, ULD12, ULD48, ULDD1, ULDD3, ULDDX, ULDO3, ULDS1, ULDVX, UNC1X, UNC3X, UNCDX, UNCNX, UNCSX, UNCVX, UNLD1, UNLD3, UXTD1, UXTD3, UXTS1, U1TUC, U1TUD, U1TUB, U1TUA,NTCVG, NTCUD, NTCD1	SDASP		200.00									
ORDER MODIFICATION CHARGE																	
		Order Modification Charge (OMC)						26.21	0.00	0.00	0.00						
		Order Modification Additional Dispatch Charge (OMCAD)						150.00	0.00	0.00	0.00						
UNBUNDLED EXCHANGE ACCESS LOOP																	
	2-WIRE ANALOG VOICE GRADE LOOP																
		2W Analog VG Loop- SL2 w/Loop or Ground Start Signaling-Zone 1		1	UEA	UEAL2	11.57	79.85	24.65	18.92	7.87						
		2W Analog VG Loop- SL2 w/Loop or Ground Start Signaling-Zone 2		2	UEA	UEAL2	16.95	79.85	24.65	18.92	7.87						
		2W Analog VG Loop- SL2 w/Loop or Ground Start Signaling-Zone 3		3	UEA	UEAL2	33.08	79.85	24.65	18.92	7.87						
		2W Analog VG Loop- SL2 w/Reverse Battery Signaling-Zone 1		1	UEA	UEAR2	11.57	79.85	24.65	18.92	7.87						
		2W Analog VG Loop- SL2 w/Reverse Battery Signaling-Zone 2		2	UEA	UEAR2	16.95	79.85	24.65	18.92	7.87						
		2W Analog VG Loop- SL2 w/Reverse Battery Signaling-Zone 3		3	UEA	UEAR2	33.08	79.85	24.65	18.92	7.87						
		Switch-As-Is Conversion rate per UNE Loop, Single LSR, (per DS0)			UEA	URESL		25.06	3.53								
		Switch-As-Is Conversion rate per UNE Loop, Spreadsheet, (per DS0)			UEA	URESP		26.55	5.03								

CATEGORY	RATE ELEMENTS	Interim	Zone	BCS	USOC	RATES($)					Svc Order Submitted Elec per LSR	Svc Order Submitted Manually per LSR	Incremental Charge - Manual Svc Order vs. Electronic-1st	Incremental Charge - Manual Svc Order vs. Electronic-Add'l	Incremental Charge - Manual Svc Order vs. Electronic-Disc 1st	Incremental Charge - Manual Svc Order vs. Electronic-Disc Add'l
							Nonrecurring		NRC Disconnect		OSS Rates($)					
						Rec	First	Add'l	First	Add'l	SOMEC	SOMAN	SOMAN	SOMAN	SOMAN	SOMAN
	CLEC to CLEC Conversion Charge w/o outside dispatch			UEA	UREWO		87.72	36.36								
	Loop Tagging-SL2 (SL2)			UEA	URETL		11.19	1.10								
4-WIRE ANALOG VOICE GRADE LOOP																
	4W Analog VG Loop-Zone 1		1	UEA	UEAL4	17.80	93.01	28.17	19.52	8.12						
	4W Analog VG Loop-Zone 2		2	UEA	UEAL4	21.68	93.01	28.17	19.52	8.12						
	4W Analog VG Loop-Zone 3		3	UEA	UEAL4	30.25	93.01	28.17	19.52	8.12						
	Switch-As-Is Conversion rate per UNE Loop, Single LSR, (per DS0)			UEA	URESL		25.06	3.53								
	Switch-As-Is Conversion rate per UNE Loop, Spreadsheet, (per DS0)			UEA	URESP		26.55	5.03								
	CLEC to CLEC Conversion Charge w/o outside dispatch			UEA	UREWO		87.72	36.36								
2-WIRE ISDN DIGITAL GRADE LOOP																
	2W ISDN Digital Grade Loop-Zone 1		1	UDN	U1L2X	21.89	180.06	35.25	18.23	6.97						
	2W ISDN Digital Grade Loop-Zone 2		2	UDN	U1L2X	25.27	180.06	35.25	18.23	6.97						
	2W ISDN Digital Grade Loop-Zone 3		3	UDN	U1L2X	40.17	180.06	35.25	18.23	6.97						
	CLEC to CLEC Conversion Charge w/o outside dispatch			UDN	UREWO		120.98	33.04								
2-WIRE ASYMMETRICAL DIGITAL SUBSCRIBER LINE (ADSL) COMPATIBLE LOOP																
	2W Unbundled ADSL Loop including manual service inquiry & facility reservation-Zone 1		1	UAL	UAL2X	11.23	44.69	31.55	0.00	0.00						
	2W Unbundled ADSL Loop including manual service inquiry & facility reservation-Zone 2		2	UAL	UAL2X	12.97	44.69	31.55	0.00	0.00						
	2W Unbundled ADSL Loop including manual service inquiry & facility reservation-Zone 3		3	UAL	UAL2X	20.62	44.69	31.55	0.00	0.00						
	2W Unbundled ADSL Loop w/o manual service inquiry & facility reservaton-Zone 1		1	UAL	UAL2W	11.23	44.69	31.55	0.00	0.00						
	2W Unbundled ADSL Loop w/o manual service inquiry & facility reservaton-Zone 2		2	UAL	UAL2W	12.97	44.69	31.55	0.00	0.00						
	2W Unbundled ADSL Loop w/o manual service inquiry & facility reservaton-Zone 3		3	UAL	UAL2W	20.62	44.69	31.55	0.00	0.00						
	CLEC to CLEC Conversion Charge w/o outside dispatch			UAL	UREWO		44.69	29.29								
2-WIRE HIGH BIT RATE DIGITAL SUBSCRIBER LINE (HDSL) COMPATIBLE LOOP																
	2W Unbundled HDSL Loop including manual service inquiry & facility reservation-Zone 1		1	UHL	UHL2X	7.88	44.69	31.55	0.00	0.00						
	2W Unbundled HDSL Loop including manual service inquiry & facility reservation-Zone 2		2	UHL	UHL2X	9.09	44.69	31.55	0.00	0.00						
	2W Unbundled HDSL Loop including manual service inquiry & facility reservation-Zone 3		3	UHL	UHL2X	14.48	44.69	31.55	0.00	0.00						
	2W Unbundled HDSL Loop w/o manual service inquiry and facility reservation-Zone 1		1	UHL	UHL2W	7.88	44.69	31.55	0.00	0.00						
	2W Unbundled HDSL Loop w/o manual service inquiry and facility reservation-Zone 2		2	UHL	UHL2W	9.09	44.69	31.55	0.00	0.00						
	2W Unbundled HDSL Loop w/o manual service inquiry and facility reservation-Zone 3		3	UHL	UHL2W	14.48	44.69	31.55	0.00	0.00						
	CLEC to CLEC Conversion Charge w/o outside dispatch			UHL	UREWO		44.69	31.55								
4-WIRE HIGH BIT RATE DIGITAL SUBSCRIBER LINE (HDSL) COMPATIBLE LOOP																
	4 Wire Unbundled HDSL Loop including manual service inquiry and facility reservation-Zone 1		1	UHL	UHL4X	10.39	44.69	31.55	0.00	0.00						
	4W Unbundled HDSL Loop including manual service inquiry and facility reservation-Zone 2		2	UHL	UHL4X	12.00	44.69	31.55	0.00	0.00						
	4W Unbundled HDSL Loop including manual service inquiry and facility reservation-Zone 3		3	UHL	UHL4X	19.07	44.69	31.55	0.00	0.00						
	4W Unbundled HDSL Loop w/o manual service inquiry and facility reservation-Zone 1		1	UHL	UHL4W	10.39	44.69	31.55	0.00	0.00						
	4W Unbundled HDSL Loop w/o manual service inquiry and facility reservation-Zone 2		2	UHL	UHL4W	12.00	44.69	31.55	0.00	0.00						
	4W Unbundled HDSL Loop w/o manual service inquiry and facility reservation-Zone 3		3	UHL	UHL4W	19.07	44.69	31.55	0.00	0.00						
	CLEC to CLEC Conversion Charge w/o outside dispatch			UHL	UREWO		44.69	31.55								
4-WIRE DS1 DIGITAL LOOP																
	4W DS1 Digital Loop-Zone 1		1	USL	USLXX	41.02	211.93	72.49	38.24	7.20						
	4W DS1 Digital Loop-Zone 2		2	USL	USLXX	46.41	211.93	72.49	38.24	7.20						

CATEGORY	RATE ELEMENTS	Interim	Zone	BCS	USOC	RATES($)					Svc Order Submitted Elec per LSR	Svc Order Submitted Manually per LSR	Incremental Charge - Manual Svc Order vs. Electronic-1st	Incremental Charge - Manual Svc Order vs. Electronic-Add'l	Incremental Charge - Manual Svc Order vs. Electronic-Disc 1st	Incremental Charge - Manual Svc Order vs. Electronic-Disc Add'l
							Nonrecurring		NRC Disconnect		OSS Rates($)					
						Rec	First	Add'l	First	Add'l	SOMEC	SOMAN	SOMAN	SOMAN	SOMAN	SOMAN
	4W DS1 Digital Loop-Zone 3		3	USL	USLXX	62.03	211.93	72.49	38.24	7.20						
	Switch-As-Is Conversion rate per UNE Loop, Single LSR, (per DS1)			USL	URESL		25.06	3.53								
	Switch-As-Is Conversion rate per UNE Loop, Spreadsheet, (per DS1)			USL	URESP		26.55	5.03								
	CLEC to CLEC Conversion Charge w/o outside dispatch			USL	UREWO		100.91	42.97								
4-WIRE 19.2, 56 OR 64 KBPS DIGITAL GRADE LOOP																
	4 Wire Unbundled Digital Loop 2.4 Kbps-Zone 1		1	UDL	UDL2X	21.86	196.66	37.00	18.82	7.20						
	4 Wire Unbundled Digital Loop 2.4 Kbps-Zone 2		2	UDL	UDL2X	28.36	196.66	37.00	18.82	7.20						
	4 Wire Unbundled Digital Loop 2.4 Kbps-Zone 3		3	UDL	UDL2X	38.22	196.66	37.00	18.82	7.20						
	4 Wire Unbundled Digital Loop 4.8 Kbps-Zone 1		1	UDL	UDL4X	21.86	196.66	37.00	18.82	7.20						
	4 Wire Unbundled Digital Loop 4.8 Kbps-Zone 2		2	UDL	UDL4X	28.36	196.66	37.00	18.82	7.20						
	4 Wire Unbundled Digital Loop 4.8 Kbps-Zone 3		3	UDL	UDL4X	38.22	196.66	37.00	18.82	7.20						
	4 Wire Unbundled Digital Loop 9.6 Kbps-Zone 1		1	UDL	UDL9X	21.86	196.66	37.00	18.82	7.20						
	4 Wire Unbundled Digital Loop 9.6 Kbps-Zone 2		2	UDL	UDL9X	28.36	196.66	37.00	18.82	7.20						
	4 Wire Unbundled Digital Loop 9.6 Kbps-Zone 3		3	UDL	UDL9X	38.22	196.66	37.00	18.82	7.20						
	4 Wire Unbundled Digital 19.2 Kbps-Zone 1		1	UDL	UDL19	21.86	196.66	37.00	18.82	7.20						
	4 Wire Unbundled Digital 19.2 Kbps-Zone 2		2	UDL	UDL19	28.36	196.66	37.00	18.82	7.20						
	4 Wire Unbundled Digital 19.2 Kbps-Zone 3		3	UDL	UDL19	38.22	196.66	37.00	18.82	7.20						
	4 Wire Unbundled Digital Loop 56 Kbps-Zone 1		1	UDL	UDL56	21.86	196.66	37.00	18.82	7.20						
	4 Wire Unbundled Digital Loop 56 Kbps-Zone 2		2	UDL	UDL56	28.36	196.66	37.00	18.82	7.20						
	4 Wire Unbundled Digital Loop 56 Kbps-Zone 3		3	UDL	UDL56	38.22	196.66	37.00	18.82	7.20						
	4 Wire Unbundled Digital Loop 64 Kbps-Zone 1		1	UDL	UDL64	21.86	196.66	37.00	18.82	7.20						
	4 Wire Unbundled Digital Loop 64 Kbps-Zone 2		2	UDL	UDL64	28.36	196.66	37.00	18.82	7.20						
	4 Wire Unbundled Digital Loop 64 Kbps-Zone 3		3	UDL	UDL64	38.22	196.66	37.00	18.82	7.20						
	Switch-As-Is Conversion rate per UNE Loop, Single LSR, (per DS0)			UDL	URESL		25.06	3.53								
	Switch-As-Is Conversion rate per UNE Loop, Spreadsheet, (per DS0)			UDL	URESP		26.55	5.03								
	CLEC to CLEC Conversion Charge w/o outside dispatch			UDL	UREWO		101.95	49.66								
2-WIRE Unbundled COPPER LOOP																
	2W Unbundled Copper Loop-Designed including manual service inquiry & facility reservation-Zone 1		1	UCL	UCLPB	12.02	44.69	31.55	0.00	0.00						
	2W Unbundled Copper Loop-Designed including manual service inquiry & facility reservation-Zone 2		2	UCL	UCLPB	13.88	44.69	31.55	0.00	0.00						
	2W Unbundled Copper Loop-Designed including manual service inquiry & facility reservation-Zone 3		3	UCL	UCLPB	22.07	44.69	31.55	0.00	0.00						
	2W Unbundled Copper Loop-Designed w/o manual service inquiry and facility reservation-Zone 1		1	UCL	UCLPW	12.02	44.69	31.55	0.00	0.00						
	2W Unbundled Copper Loop-Designed w/o manual service inquiry and facility reservation-Zone 2		2	UCL	UCLPW	13.88	44.69	31.55	0.00	0.00						
	2W Unbundled Copper Loop-Designed w/o manual service inquiry and facility reservation-Zone 3		3	UCL	UCLPW	22.07	44.69	31.55	0.00	0.00						
	Order Coordination for Unbundled Copper Loops (per loop)			UCL	UCLMC		18.92	18.92								
	CLEC to CLEC conversion Charge w/o outside dispatch			UCL	UREWO		44.69	31.55								
4-WIRE COPPER LOOP																
	4W Copper Loop-Designed including manual service inquiry and facility reservation-Zone 1		1	UCL	UCL4S	16.65	44.69	31.55	0.00	0.00						
	4W Copper Loop-Designed including manual service inquiry and facility reservation-Zone 2		2	UCL	UCL4S	19.22	44.69	31.55	0.00	0.00						
	4W Copper Loop-Designed including manual service inquiry and facility reservation-Zone 3		3	UCL	UCL4S	30.55	44.69	31.55	0.00	0.00						
	4W Copper Loop-Designed w/o manual service inquiry and facility reservation-Zone 1		1	UCL	UCL4W	16.65	44.69	31.55	0.00	0.00						
	4W Copper Loop-Designed w/o manual service inquiry and facility reservation-Zone 2		2	UCL	UCL4W	19.22	44.69	31.55	0.00	0.00						
	4W Copper Loop-Designed w/o manual service inquiry and facility reservation-Zone 3		3	UCL	UCL4W	30.55	44.69	31.55	0.00	0.00						
	Order Coordination for Unbundled Copper Loops (per loop)			UCL	UCLMC		18.92	18.92								
	CLEC to CLEC conversion Charge w/o outside dispatch			UCL	UREWO		44.69	31.55								
	Order Coordination for Specified Conversion Time (per LSR)			UEA, UDN, UAL, UHL, UDL, USL	OCOSL		57.79									
Rearrangements																

UNBUNDLED NETWORK ELEMENTS - Georgia														Attachment: 2 Exh A			
CATEGORY		RATE ELEMENTS	Interim	Zone	BCS	USOC	RATES($)					Svc Order Submitted Elec per LSR	Svc Order Submitted Manually per LSR	Incremental Charge - Manual Svc Order vs. Electronic-1st	Incremental Charge - Manual Svc Order vs. Electronic-Add'l	Incremental Charge - Manual Svc Order vs. Electronic-Disc 1st	Incremental Charge - Manual Svc Order vs. Electronic-Disc Add'l
								Nonrecurring		NRC Disconnect		OSS Rates($)					
							Rec	First	Add'l	First	Add'l	SOMEC	SOMAN	SOMAN	SOMAN	SOMAN	SOMAN
		EEL to UNE-L Retermination, per 2W Unbundled Voice Loop-SL2			UEA	UREEL		79.85	24.65								
		EEL to UNE-L Retermination, per 4 Wire Unbundled Voice Loop			UEA	UREEL		79.85	24.65								
		EEL to UNE-L Retermination, per 2W ISDN Loop			UDN	UREEL		120.98	33.02								
		EEL to UNE-L Retermination, per 4 Wire Unmbundled Digital Loop			UDL	UREEL		101.95	49.66								
		EEL to UNE-L Retermination, per 4 Wire Unbundled DS1 Loop			USL	UREEL		100.91	42.97								
UNE LOOP COMMINGLING																	
	2-WIRE ANALOG VOICE GRADE LOOP - COMMINGLING																
		2W Analog VG Loop- SL2 w/Loop or Ground Start Signaling-Zone 1		1	NTCVG	UEAL2	11.57	79.85	24.65	18.92	7.87						
		2W Analog VG Loop- SL2 w/Loop or Ground Start Signaling-Zone 2		2	NTCVG	UEAL2	16.95	79.85	24.65	18.92	7.87						
		2W Analog VG Loop- SL2 w/Loop or Ground Start Signaling-Zone 3		3	NTCVG	UEAL2	33.08	79.85	24.65	18.92	7.87						
		2W Analog VG Loop- SL2 w/Reverse Battery Signaling-Zone 1		1	NTCVG	UEAR2	11.57	79.85	24.65	18.92	7.87						
		2W Analog VG Loop- SL2 w/Reverse Battery Signaling-Zone 2		2	NTCVG	UEAR2	16.95	79.85	24.65	18.92	7.87						
		2W Analog VG Loop- SL2 w/Reverse Battery Signaling-Zone 3		3	NTCVG	UEAR2	33.08	79.85	24.65	18.92	7.87						
		Switch-As-Is Conversion rate per UNE Loop, Single LSR, (per DS0)			NTCVG	URESL		25.06	3.53								
		Switch-As-Is Conversion rate per UNE Loop, Spreadsheet, (per DS0)			NTCVG	URESP		26.55	5.03								
		CLEC to CLEC Conversion Charge w/o outside dispatch			NTCVG	UREWO		87.72	36.36								
		Loop Tagging-SL2 (SL2)			NTCVG	URETL		11.19	1.10								
	4-WIRE ANALOG VOICE GRADE LOOP																
		4W Analog VG Loop-Zone 1		1	NTCVG	UEAL4	17.80	93.01	28.17	19.52	8.12						
		4W Analog VG Loop-Zone 2		2	NTCVG	UEAL4	21.68	93.01	28.17	19.52	8.12						
		4W Analog VG Loop-Zone 3		3	NTCVG	UEAL4	30.25	93.01	28.17	19.52	8.12						
		Switch-As-Is Conversion rate per UNE Loop, Single LSR, (per DS0)			NTCVG	URESL		25.06	3.53								
		Switch-As-Is Conversion rate per UNE Loop, Spreadsheet, (per DS0)			NTCVG	URESP		26.55	5.03								
		CLEC to CLEC Conversion Charge w/o outside dispatch			NTCVG	UREWO		87.72	36.36								
	4-WIRE DS1 DIGITAL LOOP - COMMINGLING																
		4W DS1 Digital Loop-Zone 1		1	NTCD1	USLXX	41.02	211.93	72.49	38.24	7.20						
		4W DS1 Digital Loop-Zone 2		2	NTCD1	USLXX	46.41	211.93	72.49	38.24	7.20						
		4W DS1 Digital Loop-Zone 3		3	NTCD1	USLXX	62.03	211.93	72.49	38.24	7.20						
		Switch-As-Is Conversion rate per UNE Loop, Single LSR, (per DS1)			NTCD1	URESL		25.06	3.53								
		Switch-As-Is Conversion rate per UNE Loop, Spreadsheet, (per DS1)			NTCD1	URESP		26.55	5.03								
		CLEC to CLEC Conversion Charge w/o outside dispatch			NTCD1	UREWO		100.91	42.97								
	4-WIRE 19.2, 56 OR 64 KBPS DIGITAL GRADE LOOP - COMMINGLING																
		4 Wire Unbundled Digital Loop 2.4 Kbps-Zone 1		1	NTCUD	UDL2X	21.86	196.66	37.00	18.82	7.20						
		4 Wire Unbundled Digital Loop 2.4 Kbps-Zone 2		2	NTCUD	UDL2X	28.36	196.66	37.00	18.82	7.20						
		4 Wire Unbundled Digital Loop 2.4 Kbps-Zone 3		3	NTCUD	UDL2X	38.22	196.66	37.00	18.82	7.20						
		4 Wire Unbundled Digital Loop 4.8 Kbps-Zone 1		1	NTCUD	UDL4X	21.86	196.66	37.00	18.82	7.20						
		4 Wire Unbundled Digital Loop 4.8 Kbps-Zone 2		2	NTCUD	UDL4X	28.36	196.66	37.00	18.82	7.20						
		4 Wire Unbundled Digital Loop 4.8 Kbps-Zone 3		3	NTCUD	UDL4X	38.22	196.66	37.00	18.82	7.20						
		4 Wire Unbundled Digital Loop 9.6 Kbps-Zone 1		1	NTCUD	UDL9X	21.86	196.66	37.00	18.82	7.20						
		4 Wire Unbundled Digital Loop 9.6 Kbps-Zone 2		2	NTCUD	UDL9X	28.36	196.66	37.00	18.82	7.20						
		4 Wire Unbundled Digital Loop 9.6 Kbps-Zone 3		3	NTCUD	UDL9X	38.22	196.66	37.00	18.82	7.20						
		4 Wire Unbundled Digital 19.2 Kbps-Zone 1		1	NTCUD	UDL19	21.86	196.66	37.00	18.82	7.20						
		4 Wire Unbundled Digital 19.2 Kbps-Zone 2		2	NTCUD	UDL19	28.36	196.66	37.00	18.82	7.20						
		4 Wire Unbundled Digital 19.2 Kbps-Zone 3		3	NTCUD	UDL19	38.22	196.66	37.00	18.82	7.20						
		4 Wire Unbundled Digital Loop 56 Kbps-Zone 1		1	NTCUD	UDL56	21.86	196.66	37.00	18.82	7.20						
		4 Wire Unbundled Digital Loop 56 Kbps-Zone 2		2	NTCUD	UDL56	28.36	196.66	37.00	18.82	7.20						
		4 Wire Unbundled Digital Loop 56 Kbps-Zone 3		3	NTCUD	UDL56	38.22	196.66	37.00	18.82	7.20						
		4 Wire Unbundled Digital Loop 64 Kbps-Zone 1		1	NTCUD	UDL64	21.86	196.66	37.00	18.82	7.20						
		4 Wire Unbundled Digital Loop 64 Kbps-Zone 2		2	NTCUD	UDL64	28.36	196.66	37.00	18.82	7.20						
		4 Wire Unbundled Digital Loop 64 Kbps-Zone 3		3	NTCUD	UDL64	38.22	196.66	37.00	18.82	7.20						
		Switch-As-Is Conversion rate per UNE Loop, Single LSR, (per DS0)			NTCUD	URESL		25.06	3.53								
		Switch-As-Is Conversion rate per UNE Loop, Spreadsheet, (per DS0)			NTCUD	URESP		26.55	5.03								
		CLEC to CLEC Conversion Charge w/o outside dispatc h			NTCUD	UREWO		101.95	49.66								
		Order Coordination for Specified Conversion Time (per LSR)			NTCVG, NTCUD, NTCD1	OCOSL		57.79									
UNBUNDLED EXCHANGE ACCESS LOOP																	
	2-WIRE ANALOG VOICE GRADE LOOP																
		2W Analog VG Loop- Service Level 1- Zone 1		1	UEANL	UEAL2	10.51	40.02	9.99	5.61	1.72						
		2W Analog VG Loop- Service Level 1- Zone 2		2	UEANL	UEAL2	15.85	40.02	9.99	5.61	1.72						

UNBUNDLED NETWORK ELEMENTS - Georgia														Attachment: 2 Exh A			
CATEGORY		RATE ELEMENTS	Interim	Zone	BCS	USOC	RATES($)					Svc Order Submitted Elec per LSR	Svc Order Submitted Manually per LSR	Incremental Charge - Manual Svc Order vs. Electronic-1st	Incremental Charge - Manual Svc Order vs. Electronic-Add'l	Incremental Charge - Manual Svc Order vs. Electronic-Disc 1st	Incremental Charge - Manual Svc Order vs. Electronic-Disc Add'l
								Nonrecurring		NRC Disconnect		OSS Rates($)					
							Rec	First	Add'l	First	Add'l	SOMEC	SOMAN	SOMAN	SOMAN	SOMAN	SOMAN
		2W Analog VG Loop- Service Level 1- Zone 3		3	UEANL	UEAL2	31.97	40.02	9.99	5.61	1.72						
		2W Analog VG Loop- Service Level 1- Zone 1		1	UEANL	UEASL	10.51	40.02	9.99	5.61	1.72						
		2W Analog VG Loop- Service Level 1- Zone 2		2	UEANL	UEASL	15.85	40.02	9.99	5.61	1.72						
		2W Analog VG Loop- Service Level 1- Zone 3		3	UEANL	UEASL	31.97	40.02	9.99	5.61	1.72						
		Tag Loop at End User Premise			UEANL	URETL		8.92	0.88								
		Loop Testing-Basic 1st Half Hour			UEANL	URET1		25.12	0.00								
		Loop Testing-Basic Additional Half Hour			UEANL	URETA		13.62	13.62								
		Manual Order Coordiantion for UVL-SL1s (per loop)			UEANL	UEAMC		18.92	18.92								
		Order Coordination for Specified Conversion Time for UVL-SL1 (per LSR)			UEANL	OCOSL		57.79									
		Unbundled Non-Design Voice Loop, billing for BST providing make-up (Engineering Information-E.I.)			UEANL	UEANM		7.30	7.30								
		CLEC to CLEC Conversion Charge w/o Outside Dispatch (UVL-SL1)			UEANL	UREWO		15.75	8.92								
	2-WIRE UNBUNDLED COPPER LOOP - NON-DESIGNED																
		2W Unbundled Copper Loop Non-Designed- Zone 1		1	UEQ	UEQ2X	11.02	44.69	22.40	0.00	0.00						
		2W Unbundled Copper Loop Non-Designed- Zone 2		2	UEQ	UEQ2X	12.72	44.69	22.40	0.00	0.00						
		2W Unbundled Copper Loop Non-Designed-Zone 3		3	UEQ	UEQ2X	20.22	44.69	22.40	0.00	0.00						
		Tag Loop at End User Premise			UEQ	URETL		8.92	0.88								
		Loop Testing-Basic 1st Half Hour			UEQ	URET1		25.12	0.00								
		Loop Testing-Basic Additional Half Hour			UEQ	URETA		13.62	13.62								
		Manual Order Coordination 2W Unbundled Copper Loop-Non-Designed (per loop)			UEQ	USBMC		18.92	18.92								
		Unbundled Copper Loop-Non-Design, billing for BST providing make-up (Engineering Information-E.I.)			UEQ	UEQMU		7.30	7.30								
		CLEC to CLEC Conversion Charge w/o Outside Dispatch (UCL-ND)			UEQ	UREWO		14.25	7.42								
LOOP MODIFICATION																	
		Unbundled Loop Modification, Removal of Load Coils-2W pair less than or equal to 18k ft, per Unbundled Loop			UAL, UHL, UCL, UEQ, ULS, UEA, UEANL, UEPSR, UEPSB	ULM2L		0.00	0.00								
		Unbundled Loop Modification Removal of Load Coils-4 Wire less than or equal to 18K ft, per Unbundled Loop			UHL, UCL, UEA	ULM4L		0.00	0.00								
		Unbundled Loop Modification Removal of Bridged Tap Removal, per Unbundled Loop			UAL, UHL, UCL, UEQ, ULS, UEA, UEANL, UEPSR, UEPSB	ULMBT		17.91									
SUB-LOOPS																	
	Sub-Loop Distribution																
		Sub-Loop-Per Cross Box Location-CLEC Feeder Facility Set-Up			UEANL, UEF	USBSA		255.76									
		Sub-Loop-Per Cross Box Location-Per 25 Pair Panel Set-Up			UEANL, UEF	USBSB		7.29									
		Sub-Loop-Per Building Equipment Room-CLEC Feeder Facility Set-Up			UEANL	USBSC		175.09									
		Sub-Loop-Per Building Equipment Room-Per 25 Pair Panel Set-Up			UEANL	USBSD		51.61									
		Unbundled Sub-Loops, Riser Cable, 2W per Loop, Working and Spare Loop Activation			UEANL	USBRC	3.61	28.46	3.85	2.20	0.01						
		Unbundled Sub-Loops, Riser Cable, 4W per Loop, Working and Spare Loop Activation			UEANL	USBRD	7.67	31.07	4.79	2.27	0.01						
		Sub-Loop Distribution Per 2W Analog VG Loop-Zone 1		1	UEANL	USBN2	6.52	28.46	3.85	2.20	0.01						
		Sub-Loop Distribution Per 2W Analog VG Loop-Zone 2		2	UEANL	USBN2	10.18	28.46	3.85	2.20	0.01						
		Sub-Loop Distribution Per 2W Analog VG Loop-Zone 3		3	UEANL	USBN2	19.51	28.46	3.85	2.20	0.01						
		Sub-Loop Distribution Per 4W Analog VG Loop -Zone 1		1	UEANL	USBN4	5.93	31.07	4.79	2.27	0.01						
		Sub-Loop Distribution Per 4W Analog VG Loop -Zone 2		2	UEANL	USBN4	9.71	31.07	4.79	2.27	0.01						
		Sub-Loop Distribution Per 4W Analog VG Loop -Zone 3		3	UEANL	USBN4	18.85	31.07	4.79	2.27	0.01						
		Order Coordination for Unbundled Sub-Loops, per sub-loop pair			UEANL	USBMC		18.92	18.92								
		Sub-Loop 2W Intrabuilding Network Cable (INC)			UEANL	USBR2	3.61	28.46	3.85	2.20	0.01						
		Order Coordination for Unbundled Sub-Loops, per sub-loop pair			UEANL	USBMC		18.92	18.92								
		Sub-Loop 4W Intrabuilding Network Cable (INC)			UEANL	USBR4	7.67	31.07	4.79	2.27	0.01						
		Order Coordination for Unbundled Sub-Loops, per sub-loop pair			UEANL	USBMC		18.92	18.92								
		Loop Testing-Basic 1st Half Hour			UEANL	URET1		25.12	0.00								

UNBUNDLED NETWORK ELEMENTS - Georgia														Attachment: 2 Exh A			
CATEGORY		RATE ELEMENTS	Interim	Zone	BCS	USOC	RATES($)					Svc Order Submitted Elec per LSR	Svc Order Submitted Manually per LSR	Incremental Charge - Manual Svc Order vs. Electronic-1st	Incremental Charge - Manual Svc Order vs. Electronic-Add'l	Incremental Charge - Manual Svc Order vs. Electronic-Disc 1st	Incremental Charge - Manual Svc Order vs. Electronic-Disc Add'l
								Nonrecurring		NRC Disconnect		OSS Rates($)					
							Rec	First	Add'l	First	Add'l	SOMEC	SOMAN	SOMAN	SOMAN	SOMAN	SOMAN
		Loop Testing-Basic Additional Half Hour			UEANL	URETA		13.62	13.62								
		2W Copper Unbundled Sub-Loop Distribution-Zone 1		1	UEF	UCS2X	5.94	28.46	3.85	2.20	0.01						
		2W Copper Unbundled Sub-Loop Distribution-Zone 2		2	UEF	UCS2X	7.51	28.46	3.85	2.20	0.01						
		2W Copper Unbundled Sub-Loop Distribution-Zone 3		3	UEF	UCS2X	9.22	28.46	3.85	2.20	0.01						
		Order Coordination for Unbundled Sub-Loops, per sub-loop pair			UEF	USBMC		18.92	18.92								
		4 Wire Copper Unbundled Sub-Loop Distribution-Zone 1		1	UEF	UCS4X	6.37	31.07	4.79	2.27	0.01						
		4 Wire Copper Unbundled Sub-Loop Distribution-Zone 2		2	UEF	UCS4X	6.32	31.07	4.79	2.27	0.01						
		4 Wire Copper Unbundled Sub-Loop Distribution-Zone 3		3	UEF	UCS4X	9.10	31.07	4.79	2.27	0.01						
		Order Coordination for Unbundled Sub-Loops, per sub-loop pair			UEF	USBMC		18.92	18.92								
		Loop tagging Service Level 1, Unbundled Copper Loop, Non-Designed and Distribution Subloops			UEF, UEANL	URETL		8.92	0.88								
		Loop Testing-Basic 1st Half Hour			UEF	URET1		25.12	0.00								
		Loop Testing-Basic Additional Half Hour			UEF	URETA		13.62	13.62								
	Unbundled Sub-Loop Modification																
		Unbundled Sub-Loop Modification-2-W Copper Dist Load Coil/Equip Removal per 2-W PR			UEF	ULM2X		0.00	0.00								
		Unbundled Sub-loop Modification-4-W Copper Dist Load Coil/Equip Removal per 4-W PR			UEF	ULM4X		0.00	0.00								
		Unbundled Loop Modification, Removal of bridge Tap, per unbundled loop			UEF	ULMBT		17.91	17.91								
	Unbundled Network Terminating Wire (UNTW)																
		Unbundled Network Terminating Wire (UNTW) per Pair			UENTW	UENPP	0.533	25.12	12.28								
	Network Interface Device (NID)																
		Network Interface Device (NID)-1-2 lines			UENTW	UND12		32.86	20.69								
		Network Interface Device (NID)-1-6 lines			UENTW	UND16		56.03	43.86								
		Network Interface Device Cross Connect-2 W			UENTW	UNDC2		2.45	2.45								
		Network Interface Device Cross Connect-4W			UENTW	UNDC4		2.45	2.45								
UNE OTHER, PROVISIONING ONLY - NO RATE																	
		Unbundled Contact Name, Provisioning Only-no rate			UAL, UCL, UDC, UDL, UDN, UEA, UHL, UEANL, UEF, UEQ, UENTW, NTCVG, NTCUD, NTCD1, USL	UNECN	0.00	0.00									
		Unbundled DS1 Loop-Superframe Format Option-no rate			USL, NTCD1	CCOSF	0.00	0.00									
		Unbundled DS1 Loop-Expanded Superframe Format option-no rate			USL, NTCD1	CCOEF	0.00	0.00									
		NID-Dispatch and Service Order for NID installation			UENTW	UNDBX	0.00	0.00									
		UNTW Circuit Establishment, Provisioning Only-No Rate			UENTW	UENCE	0.00	0.00									
LOOP MAKE-UP																	
		Loop Makeup-Preordering w/o Reservation, per working or spare facility queried (Manual).			UMK	UMKLW		15.19	15.19								
		Loop Makeup-Preordering With Reservation, per spare facility queried (Manual).			UMK	UMKLP		19.85	19.85								
		Loop Makeup--With or w/o Reservation, per working or spare facility queried (Mechanized)			UMK	UMKMQ		0.82	0.82								
LINE SPLITTING																	
	END USER ORDERING-CENTRAL OFFICE BASED																
		Line Splitting-per line activation DLEC owned splitter			UEPSR UEPSB	UREOS	0.61										
		Line Splitting-per line activation BST owned-physical			UEPSR UEPSB	UREBP	0.6297	20.10	12.40	7.68	4.30						
		Line Splitting-per line activation BST owned-virtual			UEPSR UEPSB	UREBV	0.6288	20.10	12.40	7.68	4.30						
	UNBUNDLED EXCHANGE ACCESS LOOP																
	2-WIRE ANALOG VOICE GRADE LOOP																
	UNE Loop Rates for Line Splitting (In Ga. PSC ordered the line splitting loop USOCs match the lower port- loop combo rates UEPLX)																
		2W VG Loop (SL1) for Line Splitting-Zone 1	I	1	UEPSR UEPSB	UEALS	9.56	10.05	7.36	1.37	1.28						
		2W VG Loop (SL1) for Line Splitting-Zone 1	I	1	UEPSR UEPSB	UEABS	9.56	10.05	7.36	1.37	1.28						
		2W VG Loop (SL1) for Line Splitting-Zone 2	I	2	UEPSR UEPSB	UEALS	14.86	10.05	7.36	1.37	1.28						
		2W VG Loop (SL1) for Line Splitting-Zone 2	I	2	UEPSR UEPSB	UEABS	14.86	10.05	7.36	1.37	1.28						
		2W VG Loop (SL1)for Line Splitting-Zone 3	I	3	UEPSR UEPSB	UEALS	31.66	10.05	7.36	1.37	1.28						
		2W VG Loop (SL1)for Line Splitting-Zone 3	I	3	UEPSR UEPSB	UEABS	31.66	10.05	7.36	1.37	1.28						

UNBUNDLED NETWORK ELEMENTS - Georgia														Attachment: 2 Exh A			
CATEGORY		RATE ELEMENTS	Interim	Zone	BCS	USOC	RATES($)					Svc Order Submitted Elec per LSR	Svc Order Submitted Manually per LSR	Incremental Charge - Manual Svc Order vs. Electronic-1st	Incremental Charge - Manual Svc Order vs. Electronic-Add'l	Incremental Charge - Manual Svc Order vs. Electronic-Disc 1st	Incremental Charge - Manual Svc Order vs. Electronic-Disc Add'l
								Nonrecurring		NRC Disconnect		OSS Rates($)					
							Rec	First	Add'l	First	Add'l	SOMEC	SOMAN	SOMAN	SOMAN	SOMAN	SOMAN
	PHYSICAL COLLOCATION																
		Physical Collocation-2W Cross Connects (Loop) for Line Splitting			UEPSR UEPSB	PE1LS	0.0197	0.00	0.00								
	VIRTUAL COLLOCATION																
		Virtual Collocation-2W Cross Connects (Loop) for Line Splitting			UEPSR UEPSB	VE1LS	0.0188	0.00	0.00	0.00	0.00						
UNBUNDLED DEDICATED TRANSPORT																	
	INTEROFFICE CHANNEL - DEDICATED TRANSPORT																
		Interoffice Channel-2W VG-per mile			U1TVX	1L5XX	0.0057										
		Interoffice Channel-2W VG-Facility Termination			U1TVX	U1TV2	12.87	48.46	19.48	16.58	5.00						
		Interoffice Channel-2W VG Rev Bat.-per mile			U1TVX	1L5XX	0.0057										
		Interoffice Channel-2W VG Rev Bat.-Facility Termination			U1TVX	U1TR2	12.87	48.46	19.48	16.58	5.00						
		Interoffice Channel-4W VG-per mile			U1TVX	1L5XX	0.0057										
		Interoffice Channel-4- Wire VG-Facility Termination			U1TVX	U1TV4	10.78	48.46	19.48	16.58	5.00						
		Interoffice Channel-56 kbps-per mile			U1TDX	1L5XX	0.0057										
		Interoffice Channel-56 kbps-Facility Termination			U1TDX	U1TD5	7.83	48.46	19.48	16.58	5.00						
		Interoffice Channel-64 kbps-per mile			U1TDX	1L5XX	0.0057										
		Interoffice Channel-64 kbps-Facility Termination			U1TDX	U1TD6	7.83	48.46	19.48	16.58	5.00						
		Interoffice Channel-DS1-per mile			U1TD1	1L5XX	0.1154										
		Interoffice Channel-DS1-Facility Termination			U1TD1	U1TF1	34.19	111.03	80.28	31.36	21.73						
		Interoffice Channel-DS3-per mile			U1TD3	1L5XX	2.53										
		Interoffice Channel-DS3-Facility Termination			U1TD3	U1TF3	342.02	320.47	86.32	66.77	52.81						
		Interoffice Channel-STS-1-per mile			U1TS1	1L5XX	2.53										
		Interoffice Channel-STS-1-Facility Termination			U1TS1	U1TFS	358.67	320.47	86.32	66.77	52.81						
		Local Channel-Dedicated-2W VG			ULDVX, UNCVX	ULDV2	8.90										
		Local Channel-Dedicated-2W VG Rev Bat			ULDVX	ULDR2	8.90										
		Local Channel-Dedicated-4W VG			ULDVX, UNCVX	ULDV4	10.03										
		Local Channel-Dedicated-DS1 Zone 1		1	ULDD1, UNC1X	ULDF1	21.24										
		Local Channel-Dedicated-DS1 Zone 2		2	ULDD1, UNC1X	ULDF1	64.75										
		Local Channel-Dedicated-DS1 Zone 3		3	ULDD1, UNC1X	ULDF1	189.41										
		Local Channel-Dedicated-DS3-Per Mile per month			ULDD3, UNC3X	1L5NC	1.66										
		Local Channel-Dedicated-DS3-Facility Termination			ULDD3, UNC3X	ULDF3	169.06										
		Local Channel-Dedicated-STS-1- Per Mile per month			ULDS1, UNCSX	1L5NC	1.66										
		Local Channel-Dedicated-STS-1 -Facility Termination			ULDS1, UNCSX	ULDFS	177.81										
	UNBUNDLED DARK FIBER																
		Dark Fiber-Interoffice Transport, Per Four Fiber Strands, Per Route Mile Or Fraction Thereof			UDF, UDFCX	1L5DF	23.29										
		Dark Fiber-Interoffice Transport, Per Four Fiber Strands, Per Route Mile Or Fraction Thereof			UDF, UDFCX	UDF14		1,776.53	89.75	73.53	18.70						
DARK FIBER																	
		Dark Fiber, Four Fiber Strands, Per Route Mile or Fraction Thereof per month-Local Channel			UDF, UDFCX	1L5DC	46.84										
		Dark Fiber, Four Fiber Strands, Per Route Mile or Fraction Thereof per month-Local Loop			UDF, UDFCX	1L5DL	46.84										
8XX ACCESS TEN DIGIT SCREENING																	
		8XX Access Ten Digit Screening, Per Call					0.0008543										
		8XX Access Ten Digit Screening, w/8FL No. Delivery					0.0008543										
		8XX Access Ten Digit Screening, w/POTS No. Delivery					0.0008543										
LINE INFORMATION DATA BASE ACCESS (LIDB)																	
		LIDB Common Transport Per Query					0.0000682										
		LIDB Validation Per Query					0.0266962										
		LIDB Originating Point Code Establishment or Change			OQU	NRBPX		33.24	33.24	39.35	39.35						
CALLING NAME (CNAM) SERVICE																	
		CNAM for DB Owners, Per Query					0.0009924										
		CNAM for Non DB Owners, Per Query					0.0009924										
SELECTIVE ROUTING																	
		Selective Routing Per Unique Line Class Code Per Request Per Switch						102.19	61.15	12.68	6.34						
AIN SELECTIVE CARRIER ROUTING																	
		Regional Service Establishment						101,311.67	101,311.67	7,833.25	7,833.25						
		End Office Establishment						158.92	158.92	1.64	1.64						

UNBUNDLED NETWORK ELEMENTS - Georgia														Attachment: 2 Exh A			
CATEGORY		RATE ELEMENTS	Interim	Zone	BCS	USOC	RATES($)					Svc Order Submitted Elec per LSR	Svc Order Submitted Manually per LSR	Incremental Charge - Manual Svc Order vs. Electronic-1st	Incremental Charge - Manual Svc Order vs. Electronic-Add'l	Incremental Charge - Manual Svc Order vs. Electronic-Disc 1st	Incremental Charge - Manual Svc Order vs. Electronic-Disc Add'l
								Nonrecurring		NRC Disconnect		OSS Rates($)					
							Rec	First	Add'l	First	Add'l	SOMEC	SOMAN	SOMAN	SOMAN	SOMAN	SOMAN
		Line/Port NRC, per end user						2.06	2.06								
		Query NRC, per query					0.0020368										
AIN - BELLSOUTH AIN SMS ACCESS SERVICE																	
		AIN SMS Access Service-Service Establishment, Per State, Initial Setup			A1N	CAMSE		41.41	41.41	41.63	41.63						
		AIN SMS Access Service-Port Connection-Dial/Shared Access			A1N	CAMDP		8.15	8.15	9.16	9.16						
		AIN SMS Access Service-Port Connection-ISDN Access			A1N	CAM1P		8.15	8.15	9.16	9.16						
		AIN SMS Access Service-User Identification Codes-Per User ID Code			A1N	CAMAU		35.29	35.29	26.50	26.50						
		AIN SMS Access Service-Security Card, Per User ID Code, Initial or Replacement			A1N	CAMRC		40.24	40.24	11.72	11.72						
		AIN SMS Access Service-Storage, Per Unit (100 Kilobytes)					0.0038										
		AIN SMS Access Service-Session, Per Minute					1.81										
		AIN SMS Access Service-Company Performed Session, Per Minute					0.8323										
HIGH CAPACITY UNBUNDLED LOCAL LOOP																	
	DS-3/STS-1 UNBUNDLED LOCAL LOOP - Stand Alone																
		DS3 Unbundled Local Loop-per mile			UE3	1L5ND	10.97										
		DS3 Unbundled Local Loop-Facility Termination			UE3	UE3PX	253.38	1,753.23	131.90	112.91	75.88						
		STS-1Unbundled Local Loop-per mile			UDLSX	1L5ND	10.97										
		STS-1 Unbundled Local Loop-Facility Termination			UDLSX	UDLS1	305.42	1,753.23	131.90	112.91	75.88						
ENHANCED EXTENDED LINK (EELs)																	
	Network Elements Used in Combinations																
		2W VG Loop (SL2) in Combination-Zone 1		1	UNCVX	UEAL2	11.57	195.94	36.38	18.42	6.86						
		2W VG Loop (SL2) in Combination-Zone 2		2	UNCVX	UEAL2	16.95	195.94	36.38	18.42	6.86						
		2W VG Loop (SL2) in Combination-Zone 3		3	UNCVX	UEAL2	33.08	195.94	36.38	18.42	6.86						
		4W Analog VG Loop in Combination -Zone 1		1	UNCVX	UEAL4	17.80	195.94	36.38	18.42	6.86						
		4W Analog VG Loop in Combination -Zone 2		2	UNCVX	UEAL4	21.68	195.94	36.38	18.42	6.86						
		4W Analog VG Loop in Combination -Zone 3		3	UNCVX	UEAL4	30.25	195.94	36.38	18.42	6.86						
		2W ISDN Loop in Combination-Zone 1		1	UNCNX	U1L2X	19.82	195.94	36.38	18.42	6.86						
		2W ISDN Loop in Combination-Zone 2		2	UNCNX	U1L2X	26.26	195.94	36.38	18.42	6.86						
		2W ISDN Loop in Combination-Zone 3		3	UNCNX	U1L2X	42.17	195.94	36.38	18.42	6.86						
		4W 56Kbps Digital Grade Loop in Combination-Zone 1		1	UNCDX	UDL56	21.86	195.94	36.38	18.42	6.86						
		4W 56Kbps Digital Grade Loop in Combination-Zone 2		2	UNCDX	UDL56	28.36	195.94	36.38	18.42	6.86						
		4W 56Kbps Digital Grade Loop in Combination-Zone 3		3	UNCDX	UDL56	38.22	195.94	36.38	18.42	6.86						
		4W 64Kbps Digital Grade Loop in Combination-Zone 1		1	UNCDX	UDL64	21.86	195.94	36.38	18.42	6.86						
		4W 64Kbps Digital Grade Loop in Combination-Zone 2		2	UNCDX	UDL64	28.36	195.94	36.38	18.42	6.86						
		4W 64Kbps Digital Grade Loop in Combination-Zone 3		3	UNCDX	UDL64	38.22	195.94	36.38	18.42	6.86						
		4W DS1 Digital Loop in Combination-Zone 1		1	UNC1X	USLXX	41.02	209.45	70.44	37.91	6.86						
		4W DS1 Digital Loop in Combination-Zone 2		2	UNC1X	USLXX	46.41	209.45	70.44	37.91	6.86						
		4W DS1 Digital Loop in Combination-Zone 3		3	UNC1X	USLXX	62.03	209.45	70.44	37.91	6.86						
		DS3 Local Loop in combination-per mile			UNC3X	1L5ND	10.97										
		DS3 Local Loop in combination-Facility Termination			UNC3X	UE3PX	253.38	1,260.47	628.84	41.53	20.76						
		STS-1 Local Loop in combination-per mile			UNCSX	1L5ND	10.97										
		STS-1 Local Loop in combination-Facility Termination			UNCSX	UDLS1	305.42	1,260.47	628.84	41.53	20.76						
		Interoffice Channel in combination-2W VG-per mile			UNCVX	1L5XX	0.0057										
		Interoffice Channel in combination-2W VG-Facility Termination			UNCVX	U1TV2	12.87	66.53	33.61	43.42	27.60						
		Interoffice Channel in combination-4W VG-per mile			UNCVX	1L5XX	0.0057										
		Interoffice Channel in combination-4W VG-Facility Termination			UNCVX	U1TV4	10.78	66.53	33.61	43.42	27.60						
		Interoffice Channel in combination-4W 56 kbps-per mile			UNCDX	1L5XX	0.0057										
		Interoffice Channel in combination-4W 56 kbps-Facility Termination			UNCDX	U1TD5	7.83	66.53	33.61	43.42	27.60						
		Interoffice Channel in combination-4W 64 kbps-per mile			UNCDX	1L5XX	0.0057										
		Interoffice Channel in combination-4W 64 kbps-Facility Termination			UNCDX	U1TD6	7.83	66.53	33.61	43.42	27.60						
		Interoffice Channel in combination-DS1-per mile			UNC1X	1L5XX	0.1154										
		Interoffice Channel in combination-DS1 Facility Termination			UNC1X	U1TF1	34.19	87.76	45.73	43.80	27.97						
		Interoffice Channel in combination-DS3-per mile			UNC3X	1L5XX	2.53										
		Interoffice Channel in combination-DS3-Facility Termination			UNC3X	U1TF3	342.02	325.91	77.07	49.56	32.88						
		Interoffice Channel in combination-STS-1-per mile			UNCSX	1L5XX	2.53										
		Interoffice Channel in combination-STS-1 Facility Termination			UNCSX	U1TFS	358.67	325.91	77.07	49.56	32.88						
ADDITIONAL NETWORK ELEMENTS																	
	Optional Features & Functions:																

UNBUNDLED NETWORK ELEMENTS - Georgia														Attachment: 2 Exh A			
CATEGORY		RATE ELEMENTS	Interim	Zone	BCS	USOC	RATES($)					Svc Order Submitted Elec per LSR	Svc Order Submitted Manually per LSR	Incremental Charge - Manual Svc Order vs. Electronic-1st	Incremental Charge - Manual Svc Order vs. Electronic-Add'l	Incremental Charge - Manual Svc Order vs. Electronic-Disc 1st	Incremental Charge - Manual Svc Order vs. Electronic-Disc Add'l
								Nonrecurring		NRC Disconnect		OSS Rates($)					
							Rec	First	Add'l	First	Add'l	SOMEC	SOMAN	SOMAN	SOMAN	SOMAN	SOMAN
		Clear Channel Capability Extended Frame Option-per DS1	I		U1TD1, ULDD1,UNC1X	CCOEF		0.00	0.00	0.00	0.00						
		Clear Channel Capability Super FrameOption-per DS1	I		U1TD1, ULDD1,UNC1X	CCOSF		0.00	0.00	0.00	0.00						
		Clear Channel Capability (SF/ESF) Option-Subsequent Activity-per DS1	I		ULDD1, U1TD1, UNC1X, USL	NRCCC		184.62	23.78	2.03	0.79						
		C-bit Parity Option-Subsequent Activity-per DS3	i		U1TD3, ULDD3, UE3, UNC3X	NRCC3		218.74	7.66	0.7591	0.00						
		DS1/DS0 Channel System			UNC1X	MQ1	69.75	86.10									
		DS3/DS1Channel System			UNC3X, UNCSX	MQ3	121.90										
		VG COCI in combination			UNCVX	1D1VG	0.4689	27.33	2.90	16.86	1.04						
		VG COCI-for Stand Alone Local Loop			UEA	1D1VG	0.4689	27.33	2.90	16.86	1.04						
		VG COCI-for connection to a channelized DS1 Local Channel in the same SWC as collocation			U1TUC	1D1VG	0.4689	27.33	2.90	16.86	1.04						
		OCU-DP COCI (2.4-64kbs) in combination			UNCDX	1D1DD	0.9963	27.33	2.90	16.86	1.04						
		OCU-DP COCI (2.4-64kbs)-for Stand Alone Local Loop			UDL	1D1DD	0.9963	27.33	2.90	16.86	1.04						
		OCU-DP COCI (2.4-64kbs)-for connection to a channelized DS1 Local Channel in the same SWC as collocation			U1TUD	1D1DD	0.9963	27.33	2.90	16.86	1.04						
		2W ISDN COCI (BRITE) in combination			UNCNX	UC1CA	1.66	27.33	2.90	16.86	1.04						
		2W ISDN COCI (BRITE)-for a Local Loop			UDN	UC1CA	1.66	27.33	2.90	16.86	1.04						
		2W ISDN COCI (BRITE)-for connection to a channelized DS1 Local Channel in the same SWC as collocation			U1TUB	UC1CA	1.66	27.33	2.90	16.86	1.04						
		DS1 COCI in combination			UNC1X	UC1D1	7.35	27.33	2.90	16.86	1.04						
		DS1 COCI-for Stand Alone Local Channel			ULDD1	UC1D1	7.35	27.33	2.90	16.86	1.04						
		DS1 COCI-for Stand Alone Interoffice Channel			U1TD1	UC1D1	7.35	27.33	2.90	16.86	1.04						
		DS1 COCI-for Stand Alone Local Loop			USL	UC1D1	7.35	27.33	2.90	16.86	1.04						
		DS1 COCI-for connection to a channelized DS1 Local Channel in the same SWC as collocation			U1TUA	UC1D1	7.35	27.33	2.90	16.86	1.04						
		Wholesale to UNE, Switch-As-Is Conversion Charge			UNCVX, U1TVX, UNCDX, U1TDX, UNC1X, U1TD1,UNC3X, U1TD3, UNCSX, U1TS1, UDF,UDFCX	UNCCC		5.70	5.70								
		Unbundled Misc Rate Element, SNE SAI, Single Network Element-Switch As Is Non-recurring Charge, per circuit (LSR)	I		U1TVX, U1TDX, U1TD1, U1TD3, U1TS1, UDF, UE3	URESL		36.95	16.17								
		Unbundled Misc Rate Element, SNE SAI, Single Network Element-Switch As Is Non-recurring Charge, incremental charge per circuit on a spreadsheet	i		U1TVX, U1TDX, U1TD1, U1TD3, U1TS1, UDF, UE3	URESP		1.49	1.49								
		UNE Reconfiguration Change Charge per Circuit	I		UNC1X	URERC		35.00	35.00								
		UNE Reconfiguration Change Charge per Circuit Project Managed	I		UNC1X	URERP		1.49	1.49								
	Access to DCS - Customer Reconfiguration (FlexServ)																
		Customer Reconfiguration Establishment						1.40		1.63							
		DS1 DCS Termination with DS0 Switching					19.65	24.90	18.92	15.04	11.95						
		DS1 DCS Termination with DS1 Switching					7.09	18.18	12.20	11.14	8.05						
		DS3 DCS Termination with DS1 Switching					125.62	24.90	18.92	15.04	11.95						
	Node (SynchroNet)																
		Node per month			UNCDX	UNCNT	13.98										
	Service Rearrangements																
		NRC-Change in Facility Assignment per circuit Service Rearrangement	I		U1TVX, U1TDX, UEA, UDL, U1TUC, U1TUD, U1TUB, ULDVX, ULDDX, UNCVX, UNCDX, UNC1X	URETD		100.91	42.97								

CATEGORY		RATE ELEMENTS	Interim	Zone	BCS	USOC	RATES($)					Svc Order Submitted Elec per LSR	Svc Order Submitted Manually per LSR	Incremental Charge - Manual Svc Order vs. Electronic-1st	Incremental Charge - Manual Svc Order vs. Electronic-Add'l	Incremental Charge - Manual Svc Order vs. Electronic-Disc 1st	Incremental Charge - Manual Svc Order vs. Electronic-Disc Add'l
								Nonrecurring		NRC Disconnect		OSS Rates($)					
							Rec	First	Add'l	First	Add'l	SOMEC	SOMAN	SOMAN	SOMAN	SOMAN	SOMAN
		NRC-Change in Facility Assignment per circuit Project Management (added to CFA per circuit if project managed)	I		U1TVX, U1TDX, UEA, UDL, U1TUC, U1TUD, U1TUB, ULDVX, ULDDX, UNCVX, UNCDX, UNC1X	URETB		1.28	1.28								
		NRC-Order Coordination Specific Time-Dedicated Transport	I		UNC1X	OCOSR		18.89	18.89								
COMMINGLING																	
		Commingling Authorization			UNCVX, UNCDX, UNC1X, UNC3X, UNCSX, U1TD1, U1TD3, U1TS1, UE3, UDLSX, U1TVX, U1TDX, U1TUB, ULDVX, ULDD1, ULDD3, ULDS1	CMGAU	0.00	0.00	0.00	0.00	0.00						
	Commingled (UNE part of single bandwidth circuit)																
		Commingled VG COCI			XDV2X, NTCVG	1D1VG	0.4689	27.33	2.90	16.86	1.04						
		Commingled Digital COCI			XDV6X, NTCUD	1D1DD	0.9963	27.33	2.90	16.86	1.04						
		Commingled ISDN COCI			XDD4X	UC1CA	1.66	27.33	2.90	16.86	1.04						
		Commingled 2W VG Interoffice Channel			XDV2X	U1TV2	12.87	66.53	33.61	43.42	27.60						
		Commingled 4W VG Interoffice Channel			XDV6X	U1TV4	10.78	66.53	33.61	43.42	27.60						
		Commingled 56kbps Interoffice Channel			XDD4X	U1TD5	7.83	66.53	33.61	43.42	27.60						
		Commingled 64kbps Interoffice Channel			XDD4X	U1TD6	7.83	66.53	33.61	43.42	27.60						
		Commingled VG/DS0 Interoffice Channel Mileage			XDV2X, XDV6X, XDD4X	1L5XX	0.0057										
		Commingled 2W Local Loop Zone 1		1	XDV2X	UEAL2	11.57	195.94	36.38	18.42	6.86						
		Commingled 2W Local Loop Zone 2		2	XDV2X	UEAL2	16.95	195.94	36.38	18.42	6.86						
		Commingled 2W Local Loop Zone 3		3	XDV2X	UEAL2	33.08	195.94	36.38	18.42	6.86						
		Commingled 4W Local Loop Zone 1		1	XDV6X	UEAL4	17.80	195.94	36.38	18.42	6.86						
		Commingled 4W Local Loop Zone 2		2	XDV6X	UEAL4	21.68	195.94	36.38	18.42	6.86						
		Commingled 4W Local Loop Zone 3		3	XDV6X	UEAL4	30.25	195.94	36.38	18.42	6.86						
		Commingled 56kbps Local Loop Zone 1		1	XDD4X	UDL56	21.86	195.94	36.38	18.42	6.86						
		Commingled 56kbps Local Loop Zone 2		2	XDD4X	UDL56	28.36	195.94	36.38	18.42	6.86						
		Commingled 56kbps Local Loop Zone 3		3	XDD4X	UDL56	38.22	195.94	36.38	18.42	6.86						
		Commingled 64kbps Local Loop Zone 1		1	XDD4X	UDL64	21.86	195.94	36.38	18.42	6.86						
		Commingled 64kbps Local Loop Zone 2		2	XDD4X	UDL64	28.36	195.94	36.38	18.42	6.86						
		Commingled 64kbps Local Loop Zone 3		3	XDD4X	UDL64	38.22	195.94	36.38	18.42	6.86						
		Commingled ISDN Local Loop Zone 1		1	XDD4X	U1L2X	19.82	195.94	36.38	18.42	6.86						
		Commingled ISDN Local Loop Zone 2		2	XDD4X	U1L2X	26.26	195.94	36.38	18.42	6.86						
		Commingled ISDN Local Loop Zone 3		3	XDD4X	U1L2X	42.17	195.94	36.38	18.42	6.86						
		Commingled DS1 COCI			XDH1X, NTCD1	UC1D1	7.35	27.33	2.90	16.86	1.04						
		Commingled DS1 Interoffice Channel			XDH1X	U1TF1	34.19	87.76	45.73	43.80	27.97						
		Commingled DS1 Interoffice Channel Mileage			XDH1X	1L5XX	0.1154										
		Commingled DS1/DS0 Channel System			XDH1X	MQ1	69.75	86.10									
		Commingled DS1 Local Loop Zone 1		1	XDH1X	USLXX	41.02	209.45	70.44	37.91	6.86						
		Commingled DS1 Local Loop Zone 2		2	XDH1X	USLXX	46.41	209.45	70.44	37.91	6.86						
		Commingled DS1 Local Loop Zone 3		3	XDH1X	USLXX	62.03	209.45	70.44	37.91	6.86						
		Commingled DS3 Local Loop			HFQC6	UE3PX	253.38	1,260.47	628.84	41.53	20.76						
		Commingled DS3/STS-1 Local Loop Mileage			HFQC6, HFRST	1L5ND	10.97										
		Commingled STS-1 Local Loop			HFRST	UDLS1	305.42	1,260.47	628.84	41.53	20.76						
		Commingled DS3/DS1 Channel System			HFQC6	MQ3	121.90										
		Commingled DS3 Interoffice Channel			HFQC6	U1TF3	342.02	325.91	77.07	49.56	32.88						
		Commingled DS3 Interoffice Channel Mileage			HFQC6	1L5XX	2.53										
		Commingled STS-1Interoffice Channel			HFRST	U1TFS	358.67	325.91	77.07	49.56	32.88						
		Commingled STS-1Interoffice Channel Mileage			HFRST	1L5XX	2.53										
		Commingled Dark Fiber-Interoffice Transport, Per Four Fiber Strands, Per Route Mile Or Fraction Thereof			HEQDL	1L5DF	23.29										

UNBUNDLED NETWORK ELEMENTS - Georgia														Attachment: 2 Exh A			
CATEGORY		RATE ELEMENTS	Interim	Zone	BCS	USOC	RATES($)					Svc Order Submitted Elec per LSR	Svc Order Submitted Manually per LSR	Incremental Charge - Manual Svc Order vs. Electronic-1st	Incremental Charge - Manual Svc Order vs. Electronic-Add'l	Incremental Charge - Manual Svc Order vs. Electronic-Disc 1st	Incremental Charge - Manual Svc Order vs. Electronic-Disc Add'l
								Nonrecurring		NRC Disconnect		OSS Rates($)					
							Rec	First	Add'l	First	Add'l	SOMEC	SOMAN	SOMAN	SOMAN	SOMAN	SOMAN
		Commingled Dark Fiber-Interoffice Transport, Per Four Fiber Strands, Per Route Mile Or Fraction Thereof			HEQDL	UDF14		1,776.53	89.75	73.53	18.70						
SIGNALING (CCS7)																	
	NOTE:"bk" beside a rate indicates that the parties have agreed to bill and keep for that element pursuant to the terms and conditions in Attachment 3.																
		CCS7 Signaling Usage, Per TCAP Message					0.000087bk										
		CCS7 Signaling Usage, Per ISUP Message (same as E.3.3)					.00bk										
LNP Query Service																	
		LNP Charge Per query					0.0008034										
		LNP Service Establishment Manual						12.49		11.09							
		LNP Service Provisioning with Point Code Establishment						574.87	293.68	251.47	184.91						
911 PBX LOCATE																	
	911 PBX LOCATE DATABASE CAPABILITY																
		Service Establishment per CLEC per End User Account			9PBDC	9PBEU		1,825.00									
		Changes to TN Range or Customer Profile			9PBDC	9PBTN		182.67									
		Per Telephone Number (Monthly)			9PBDC	9PBMM	0.07										
		Change Company (Service Provider) ID			9PBDC	9PBPC		536.23									
		PBX Locate Service Support per CLEC (Monthlt)			9PBDC	9PBMR	176.96										
		Service Order Charge			9PBDC	9PBSC		11.73									
	911 PBX LOCATE TRANSPORT COMPONENT																
	See Att 3																
	Note: Rates displaying an "I" in Interim column are interim as a result of a Commission order.																
UNBUNDLED LOCAL EXCHANGE SWITCHING(PORTS)																	
	The Exchange Switching Port Rates Reflected Here Apply to Embedded Base Switching Ports as of March 10, 2005 and Consist of the TELRIC Cost Based Rates Plus $1.00 in Accordance with the TRRO.																
	Exchange Ports																
	NOTE: Although the Port Rate includes all available features in GA, KY, LA & TN, the desired features will need to be ordered using retail USOCs																
	2-WIRE VOICE GRADE LINE PORT RATES (RES)																
		Exchange Ports-2W Analog Line Port- Res.			UEPSR	UEPRL	2.09	2.42	2.31	1.37	1.28						
		Exchange Ports-2W Analog Line Port with Caller ID-Res.			UEPSR	UEPRC	2.09	2.42	2.31	1.37	1.28						
		Exchange Ports-2W Analog Line Port outgoing only-Res.			UEPSR	UEPRO	2.09	2.42	2.31	1.37	1.28						
		Exchange Ports-2W VG unbundled res, low usage line port with Caller ID (LUM)			UEPSR	UEPAP	2.09	2.42	2.31	1.37	1.28						
		Exchange Ports-2W Voice GA basic dialing port w/o Caller ID			UEPSR	UEPWC	2.09	2.42	2.31	1.37	1.28						
		2W voice unbundled GA basic dialing port for use with Caller ID-res			UEPSR	UEPWQ	2.09	2.42	2.31	1.37	1.28						
		2W voice unbundled GA basic dialing port-outgoing only			UEPSR	UEPWR	2.09	2.42	2.31	1.37	1.28						
		2W voice unbundled Low Usage Line Port w/o Caller ID Capability			UEPSR	UEPRT	2.09	2.42	2.31	1.37	1.28						
		2W VG Unbundled Port w/o Caller ID capability, GA			UEPSR	UEPRV	2.09	2.42	2.31	1.37	1.28						
		2W VG Unbundled Port with Caller ID capability, GA			UEPSR	UEPRU	2.09	2.42	2.31	1.37	1.28						
		Subsequent Activity			UEPSR	USASC	0.00	0.00	0.00								
	FEATURES																
		All Available Vertical Features			UEPSR	UEPVF	0.775	0.00	0.00								
	2-WIRE VOICE GRADE LINE PORT RATES (BUS)																
		Exchange Ports-2W Analog Line Port w/o Caller ID-Bus			UEPSB	UEPBL	2.09	2.42	2.31	1.37	1.28						
		Exchange Ports-2W VG unbundled Line Port with unbundled port with Caller+E484 ID-Bus.			UEPSB	UEPBC	2.09	2.42	2.31	1.37	1.28						
		Exchange Ports-2W Voice GA Business Basic Dialing Port, with Caller ID capability			UEPSB	UEPWP	2.09	2.42	2.31	1.37	1.28						
		Exchange Ports-2W Analog Line Port outgoing only-Bus.			UEPSB	UEPBO	2.09	2.42	2.31	1.37	1.28						
		Exhange Ports-2W VG unbundled incoming only port with Caller ID-Bus			UEPSB	UEPB1	2.09	2.42	2.31	1.37	1.28						
		Exchange Ports-2W Voice GA Business Dialing Plan w/o Caller ID			UEPSB	UEPWD	2.09	2.42	2.31	1.37	1.28						
		2W voice unbundled Incoming Only Port w/o Caller ID Capability			UEPSB	UEPBE	2.09	2.42	2.31	1.37	1.28						
		Subsequent Activity			UEPSB	USASC	0.00	0.00	0.00								
	FEATURES																
		All Available Vertical Features			UEPSB	UEPVF	0.775	0.00	0.00								
	EXCHANGE PORT RATES (DID & PBX)																
		2W VG Unbundled 2-Way PBX Trunk-Res			UEPSE	UEPRD	2.09	28.88	13.63	11.48	0.83						
		2W VG Line Side Unbundled 2-Way PBX Trunk-Bus			UEPSP	UEPPC	2.09	28.88	13.63	11.48	0.83						
		2W VG Line Side Unbundled Outward PBX Trunk-Bus			UEPSP	UEPPO	2.09	28.88	13.63	11.48	0.83						
		2W VG Line Side Unbundled Incoming PBX Trunk-Bus			UEPSP	UEPP1	2.09	28.88	13.63	11.48	0.83						

UNBUNDLED NETWORK ELEMENTS - Georgia														Attachment: 2 Exh A			
CATEGORY	RATE ELEMENTS	Interim	Zone	BCS	USOC	RATES($)					Svc Order Submitted Elec per LSR	Svc Order Submitted Manually per LSR	Incremental Charge - Manual Svc Order vs. Electronic-1st	Incremental Charge - Manual Svc Order vs. Electronic-Add'l	Incremental Charge - Manual Svc Order vs. Electronic-Disc 1st	Incremental Charge - Manual Svc Order vs. Electronic-Disc Add'l
							Nonrecurring		NRC Disconnect		OSS Rates($)					
						Rec	First	Add'l	First	Add'l	SOMEC	SOMAN	SOMAN	SOMAN	SOMAN	SOMAN
	2W Analog Long Distance Terminal PBX Trunk-Bus			UEPSP	UEPLD	2.09	28.88	13.63	11.48	0.83						
	2W Voice Unbundled PBX LD Terminal Ports			UEPSP	UEPLD	2.09	28.88	13.63	11.48	0.83						
	2W Vice Unbundled 2-Way PBX Usage Port			UEPSP	UEPXA	2.09	28.88	13.63	11.48	0.83						
	2W Voice Unbundled PBX Toll Terminal Hotel Ports			UEPSP	UEPXB	2.09	28.88	13.63	11.48	0.83						
	2W Voice Unbundled PBX LD DDD Terminals Port			UEPSP	UEPXC	2.09	28.88	13.63	11.48	0.83						
	2W Voice Unbundled PBX LD Terminal Switchboard Port			UEPSP	UEPXD	2.09	28.88	13.63	11.48	0.83						
	2W Voice Unbundled PBX LD Terminal Switchboard IDD Capable Port			UEPSP	UEPXE	2.09	28.88	13.63	11.48	0.83						
	2W Voice Unbundled 2-Way PBX Hotel/Hospital Economy Administrative Calling Port			UEPSP	UEPXL	2.09	28.88	13.63	11.48	0.83						
	2W Voice Unbundled 2-Way PBX Hotel/Hospital Economy Rm Calling Port			UEPSP	UEPXM	2.09	28.88	13.63	11.48	0.83						
	2W Voice Unbundled 1-Way Outgoing PBX Hotel/Hospital Discount Rm Calling Port			UEPSP	UEPXO	2.09	28.88	13.63	11.48	0.83						
	2W Voice Unbundled 1-Way Outgoing PBX Measured Port			UEPSP	UEPXS	2.09	28.88	13.63	11.48	0.83						
	2W voice unbundled GA basic dialing port-1-Way Oudial Trunk			UEPSP	UEPWS	2.09	28.88	13.63	11.48	0.83						
	2W voice unbundled GA basic dialing port-2-Way Trunk			UEPSP	UEPWT	2.09	28.88	13.63	11.48	0.83						
	2W voice unbundled GA basic dialing port-2-way PBX Trunk			UEPSP	UEPPQ	2.09	28.88	13.63	11.48	0.83						
	Subsequent Activity			UEPSP	USASC	0.00	0.00	0.00								
FEATURES																
	All Available Vertical Features			UEPSP UEPSE	UEPVF	0.775	0.00	0.00								
NOTE: Transmission/usage charges associated with POTS circuit switched usage will also apply to circuit switched voice and/or circuit switched data transmission by B-Channels associated with 2-wire ISDN ports.																
NOTE: Access to B Channel or D Channel Packet capabilities will be available only through BFR/New Business Request Process. Rates for the packet capabilities will be determined via the Bona Fide Request/New Business Request Process.																
2-WIRE VOICE GRADE LINE PORT RATES (DID)																
	Exchange Ports-2W DID Port			UEPEX	UEPP2	6.50	122.26	18.65	54.82	3.45						
2-WIRE VOICE GRADE LINE PORT RATES (ISDN-BRI)																
	Exchange Ports-2W ISDN Port (See Notes below.)			UEPTX, UEPSX	U1PMA	7.09	76.39	51.50	45.67	10.36						
	All Features Offered			UEPTX, UEPSX	UEPVF	0.775	0.00	0.00								
	Exchange Ports-2W ISDN Port -- Channel Profiles			UEPTX, UEPSX	U1UMA	0.00	0.00	0.00								
NOTE: Transmission/usage charges associated with POTS circuit switched usage will also apply to circuit switched voice and/or circuit switched data transmission by B-Channels associated with 2-wire ISDN ports.																
NOTE: Access to B Channel or D Channel Packet capabilities will be available only through BFR/New Business Request Process. Rates for the packet capabilities will be determined via the Bona Fide Request/New Business Request Process.																
UNBUNDLED PORT with REMOTE CALL FORWARDING CAPABILITY																
UNBUNDLED REMOTE CALL FORWARDING SERVICE - RESIDENCE																
	Unbundled Remote Call Forwarding Service, Area Calling, Res			UEPVR	UERAC	2.09	2.42	2.31	1.37	1.28						
	Unbundled Remote Call Forwarding Service, Local Calling-Res			UEPVR	UERLC	2.09	2.42	2.31	1.37	1.28						
	Unbundled Remote Call Forwarding Service, InterLATA-Res			UEPVR	UERTE	2.09	2.42	2.31	1.37	1.28						
	Unbundled Remote Call Forwarding Service, IntraLATA-Res			UEPVR	UERTR	2.09	2.42	2.31	1.37	1.28						
Non-Recurring																
	Unbundled Remote Call Forwarding Service -Conversion-Switch-as-is			UEPVR	USAC2		2.01	0.31								
	Unbundled Remote Call Forwarding Service -Conversion with allowed change (PIC and LPIC)			UEPVR	USACC		2.01	0.31								
UNBUNDLED REMOTE CALL FORWARDING - Bus																
	Unbundled Remote Call Forwarding Service, Area Calling-Bus			UEPVB	UERAC	2.09	2.42	2.31	1.37	1.28						
	Unbundled Remote Call Forwarding Service, Local Calling-Bus			UEPVB	UERLC	2.09	2.42	2.31	1.37	1.28						
	Unbundled Remote Call Forwarding Service, InterLATA-Bus			UEPVB	UERTE	2.09	2.42	2.31	1.37	1.28						
	Unbundled Remote Call Forwarding Service, IntraLATA-Bus			UEPVB	UERTR	2.09	2.42	2.31	1.37	1.28						
	Unbundled Remote Call Forwarding Service Expanded and Exception Local Calling			UEPVB	UERVJ	2.09	2.42	2.31	1.37	1.28						
Non-Recurring																
	Unbundled Remote Call Forwarding Service-Conversion-Switch-as-is			UEPVB	USAC2		2.01	0.31								
	Unbundled Remote Call Forwarding Service -Conversion with allowed change (PIC and LPIC)			UEPVB	USACC		2.01	0.31								
UNBUNDLED LOCAL SWITCHING, PORT USAGE																
End Office Switching (Port Usage)																
	End Office Switching Function, Per MOU					0.0006153										
	End Office Trunk Port-Shared, Per MOU					0.0001226										
Tandem Switching (Port Usage) (Local or Access Tandem)																
	Tandem Switching Function Per MOU					0.0000972										
	Tandem Trunk Port-Shared, Per MOU					0.0001557										

UNBUNDLED NETWORK ELEMENTS - Georgia														Attachment: 2 Exh A			
CATEGORY	RATE ELEMENTS	Interim	Zone	BCS	USOC	RATES($)					Svc Order Submitted Elec per LSR	Svc Order Submitted Manually per LSR	Incremental Charge - Manual Svc Order vs. Electronic-1st	Incremental Charge - Manual Svc Order vs. Electronic-Add'l	Incremental Charge - Manual Svc Order vs. Electronic-Disc 1st	Incremental Charge - Manual Svc Order vs. Electronic-Disc Add'l
							Nonrecurring		NRC Disconnect		OSS Rates($)					
						Rec	First	Add'l	First	Add'l	SOMEC	SOMAN	SOMAN	SOMAN	SOMAN	SOMAN
	Tandem Switching Function Per MOU (Melded)					0.000017904										
	Tandem Trunk Port-Shared, Per MOU (Melded)					0.00002868										
	Melded Factor: 18.42% of the Tandem Rate															
	Common Transport															
	Common Transport-Per Mile, Per MOU					0.0000027										
	Common Transport-Facilities Termination Per MOU					0.0001914										
UNBUNDLED PORT/LOOP COMBINATIONS - COST BASED RATES																
	>Cost Based Rates are applied where BellSouth is required by FCC and/or State Commission rule to provide Unbundled Local Switching or Switch Ports.															
	>The UNE-P Switching Port Rates Reflected in the Cost Based Section Apply to Embedded Base UNE-Ps as of March 10, 2005 and Consist of the TELRIC Cost Based Rates Plus $1.00 in Accordance with the TRRO.															
	>Features shall apply to the Unbundled Port/Loop Combination - Cost Based Rate section in the same manner as they are applied to the Stand-Alone Unbundled Port section of this Rate Exhibit.															
	>End Office and Tandem Switching Usage and Common Transport Usage rates in the Port section of this rate exhibit shall apply to all combinations of loop/port network elements except for UNE Coin Port/Loop Combinations.															
	>The first and additional Port nonrecurring charges apply to Not Currently Combined Combos. For Currently Combined Combos the nonrecurring charges shall be those identified in the Nonrecurring - Currently Combined sections.															
	2-WIRE VOICE GRADE LOOP WITH 2-WIRE LINE PORT (RES)															
	UNE Port/Loop Combination Rates															
	2W VG Loop/Port Combo-Zone 1					11.46										
	2W VG Loop/Port Combo-Zone 2					16.76										
	2W VG Loop/Port Combo-Zone 3					33.56										
	UNE Loop Rates															
	2W VG Loop (SL1)-Zone 1		1	UEPRX	UEPLX	9.56										
	2W VG Loop (SL1)-Zone 2		2	UEPRX	UEPLX	14.86										
	2W VG Loop (SL1)-Zone 3		3	UEPRX	UEPLX	31.66										
	2-Wire Voice Grade Line Port Rates (Res)															
	2W voice unbundled port-residence			UEPRX	UEPRL	1.9019	10.05	7.36	1.37	1.28						
	2W voice unbundled port with Caller ID-res			UEPRX	UEPRC	1.9019	10.05	7.36	1.37	1.28						
	2W voice unbundled port outgoing only-res			UEPRX	UEPRO	1.9019	10.05	7.36	1.37	1.28						
	2W voice unbundles res, low usage line port with Caller ID (LUM)			UEPRX	UEPAP	1.9019	10.05	7.36	1.37	1.28						
	2W voice unbundled GA basic dialing port w/o Caller ID capability-res			UEPRX	UEPWC	1.9019	10.05	7.36	1.37	1.28						
	2W voice unbundled GA basic dialing port for use with Caller ID-res			UEPRX	UEPWQ	1.9019	10.05	7.36	1.37	1.28						
	2W voice unbundled GA basic dialing port-outgoing only			UEPRX	UEPWR	1.9019	10.05	7.36	1.37	1.28						
	2W voice unbundled Low Usage Line Port w/o Caller ID Capability			UEPRX	UEPRT	1.9019	10.05	7.36	1.37	1.28						
	2W VG Unbundled Port w/o Caller ID, GA			UEPRX	UEPRV	1.9019	10.05	7.36	1.37	1.28						
	2W VG Unbundled Port with Caller ID, GA			UEPRX	UEPRU	1.9019	10.05	7.36	1.37	1.28						
	FEATURES															
	All Features Offered			UEPRX	UEPVF	0.775	0.00	0.00								
	NONRECURRING CHARGES (NRCs) - CURRENTLY COMBINED															
	2W VG Loop/Line Port Combination-Conversion-Switch-as-is			UEPRX	USAC2		0.10	0.10								
	2W VG Loop/Line Port Combination -Conversion-Switch with change			UEPRX	USACC		0.10	0.10								
	2W VG Loop/Line Port Platform-Installation Charge at QuickService location-Not Conversion of Existing Service			UEPRX	URECC		0.10									
	ADDITIONAL NRCs															
	2W VG Loop/Line Port Combination-Subsequent Activity			UEPRX	USAS2	0.00	0.00	0.00								
	Unbundled Misc Rate Element, Tag Loop at End User Premise			UEPRX	URETL		8.33	0.83								
	OFF/ON PREMISES EXTENSION CHANNELS															
	2W Analog VG Extension Loop – Non-Design		1	UEPRX	UEAEN	10.51	40.02	9.99	5.61	1.72						
	2W Analog VG Extension Loop – Non-Design		2	UEPRX	UEAEN	15.85	40.02	9.99	5.61	1.72						
	2W Analog VG Extension Loop – Non-Design		3	UEPRX	UEAEN	31.97	40.02	9.99	5.61	1.72						
	2W Analog VG Extension Loop – Design		1	UEPRX	UEAED	11.57	79.85	24.65	18.92	7.87						
	2W Analog VG Extension Loop – Design		2	UEPRX	UEAED	16.95	79.85	24.65	18.92	7.87						
	2W Analog VG Extension Loop – Design		3	UEPRX	UEAED	33.08	79.85	24.65	18.92	7.87						
	INTEROFFICE TRANSPORT															
	Interoffice Transport-Dedicated-2W VG-Facility Termination			UEPRX	U1TV2	12.87	48.46	19.48	16.58	5.00						
	Interoffice Transport-Dedicated-2W VG-Per Mile or Fraction Mile			UEPRX	U1TVM	0.0057	0.00	0.00								
	2-WIRE VOICE GRADE LOOP WITH 2-WIRE LINE PORT (BUS)															
	UNE Port/Loop Combination Rates															
	2W VG Loop/Port Combo-Zone 1					11.46										
	2W VG Loop/Port Combo-Zone 2					16.76										
	2W VG Loop/Port Combo-Zone 3					33.56										
	UNE Loop Rates															
	2W VG Loop (SL1)-Zone 1		1	UEPBX	UEPLX	9.56										

UNBUNDLED NETWORK ELEMENTS - Georgia														Attachment: 2 Exh A			
CATEGORY	RATE ELEMENTS	Interim	Zone	BCS	USOC	RATES($)					Svc Order Submitted Elec per LSR	Svc Order Submitted Manually per LSR	Incremental Charge - Manual Svc Order vs. Electronic-1st	Incremental Charge - Manual Svc Order vs. Electronic-Add'l	Incremental Charge - Manual Svc Order vs. Electronic-Disc 1st	Incremental Charge - Manual Svc Order vs. Electronic-Disc Add'l
							Nonrecurring		NRC Disconnect		OSS Rates($)					
						Rec	First	Add'l	First	Add'l	SOMEC	SOMAN	SOMAN	SOMAN	SOMAN	SOMAN
	2W VG Loop (SL1)-Zone 2		2	UEPBX	UEPLX	14.86										
	2W VG Loop (SL1)-Zone 3		3	UEPBX	UEPLX	31.66										
2-Wire Voice Grade Line Port (Bus)																
	2W voice unbundled port w/o Caller ID-bus			UEPBX	UEPBL	1.9019	10.05	7.36	1.37	1.28						
	2W voice unbundled port with Caller + E484 ID-bus			UEPBX	UEPBC	1.9019	10.05	7.36	1.37	1.28						
	2W voice unbundled port outgoing only-bus			UEPBX	UEPBO	1.9019	10.05	7.36	1.37	1.28						
	2W voice unbundled incoming only port with Caller ID-Bus			UEPBX	UEPB1	1.9019	10.05	7.36	1.37	1.28						
	2W voice unbundled GA basic dialing port, w/o Caller ID capability-bus			UEPBX	UEPWD	1.9019	10.05	7.36	1.37	1.28						
	2W voice unbundled GA basic dialing port for use with Caller ID-bus			UEPBX	UEPWP	1.9019	10.05	7.36	1.37	1.28						
	2W voice unbundled Incoming Only Port w/o Caller ID Capability			UEPBX	UEPBE	1.9019	10.05	7.36	1.37	1.28						
FEATURES																
	All Features Offered			UEPBX	UEPVF	0.775	0.00	0.00								
NONRECURRING CHARGES (NRCs) - CURRENTLY COMBINED																
	2W VG Loop/Line Port Combination-Conversion-Switch-as-is			UEPBX	USAC2		0.10	0.10								
	2W VG Loop/Line Port Combination -Conversion-Switch with change			UEPBX	USACC		0.10	0.10								
ADDITIONAL NRCs																
	2W VG Loop/Line Port Combination-Subsequent Activity			UEPBX	USAS2		0.00	0.00								
	Unbundled Misc Rate Element, Tag Loop at End User Premise			UEPBX	URETL		8.33	0.83								
OFF/ON PREMISES EXTENSION CHANNELS																
	2W Analog VG Extension Loop – Non-Design		1	UEPBX	UEAEN	10.51	40.02	9.99	5.61	1.72						
	2W Analog VG Extension Loop – Non-Design		2	UEPBX	UEAEN	15.85	40.02	9.99	5.61	1.72						
	2W Analog VG Extension Loop – Non-Design		3	UEPBX	UEAEN	31.97	40.02	9.99	5.61	1.72						
	2W Analog VG Extension Loop – Design		1	UEPBX	UEAED	11.57	79.85	24.65	18.92	7.87						
	2W Analog VG Extension Loop – Design		2	UEPBX	UEAED	16.95	79.85	24.65	18.92	7.87						
	2W Analog VG Extension Loop – Design		3	UEPBX	UEAED	33.08	79.85	24.65	18.92	7.87						
INTEROFFICE TRANSPORT																
	Interoffice Transport-Dedicated-2W VG-Facility Termination			UEPBX	U1TV2	12.87	48.46	19.48	16.58	5.00						
	Interoffice Transport-Dedicated-2W VG-Per Mile or Fraction Mile			UEPBX	U1TVM	0.0057	0.00	0.00								
2-WIRE VOICE GRADE LOOP WITH 2-WIRE LINE PORT (RES - PBX)																
UNE Port/Loop Combination Rates																
	2W VG Loop/Port Combo-Zone 1					11.46										
	2W VG Loop/Port Combo-Zone 2					16.76										
	2W VG Loop/Port Combo-Zone 3					33.56										
UNE Loop Rates																
	2W VG Loop (SL 1)-Zone 1		1	UEPRG	UEPLX	9.56										
	2W VG Loop (SL 1)-Zone 2		2	UEPRG	UEPLX	14.86										
	2W VG Loop (SL 1)-Zone 3		3	UEPRG	UEPLX	31.66										
2-Wire Voice Grade Line Port Rates (RES - PBX)																
	2W VG Unbundled Combination 2-Way PBX Trunk Port-Res			UEPRG	UEPRD	1.9019	10.05	7.36	1.37	1.28						
FEATURES																
	All Features Offered			UEPRG	UEPVF	0.775	0.00	0.00								
NONRECURRING CHARGES (NRCs) - CURRENTLY COMBINED																
	2W VG Loop/ Line Port Combination (PBX)-Conversion-Switch-As-Is			UEPRG	USAC2		0.10	0.10								
	2W VG Loop/ Line Port Combination (PBX)-Conversion-Switch with Change			UEPRG	USACC		0.10	0.10								
ADDITIONAL NRCs																
	2W VG Loop/ Line Port Combination (PBX)-Subsequent Activity			UEPRG	USAS2	0.00	0.00	0.00								
	PBX Subsequent Activity-Change/Rearrange Multiline Hunt Group						6.70	6.70								
	Unbundled Misc Rate Element, Tag Loop at End User Premise			UEPRG	URETL		8.33	0.83								
OFF/ON PREMISES EXTENSION CHANNELS																
	Local Channel VG, per termination		1	UEPRG	P2JHX	11.57	79.85	24.65	18.92	7.87						
	Local Channel VG, per termination		2	UEPRG	P2JHX	16.95	79.85	24.65	18.92	7.87						
	Local Channel VG, per termination		3	UEPRG	P2JHX	33.08	79.85	24.65	18.92	7.87						
	Non-Wire Direct Serve Channel VG		1	UEPRG	SDD2X	12.74	56.92	7.70	4.40	0.02						
	Non-Wire Direct Serve Channel VG		2	UEPRG	SDD2X	19.76	56.92	7.70	4.40	0.02						
	Non-Wire Direct Serve Channel VG		3	UEPRG	SDD2X	37.18	56.92	7.70	4.40	0.02						
INTEROFFICE TRANSPORT																
	Interoffice Transport-Dedicated-2W VG-Facility Termination			UEPRG	U1TV2	12.87	48.46	19.48	16.58	5.00						

UNBUNDLED NETWORK ELEMENTS - Georgia														Attachment: 2 Exh A			
CATEGORY		RATE ELEMENTS	Interim	Zone	BCS	USOC	RATES($)					Svc Order Submitted Elec per LSR	Svc Order Submitted Manually per LSR	Incremental Charge - Manual Svc Order vs. Electronic-1st	Incremental Charge - Manual Svc Order vs. Electronic-Add'l	Incremental Charge - Manual Svc Order vs. Electronic-Disc 1st	Incremental Charge - Manual Svc Order vs. Electronic-Disc Add'l
								Nonrecurring		NRC Disconnect		OSS Rates($)					
							Rec	First	Add'l	First	Add'l	SOMEC	SOMAN	SOMAN	SOMAN	SOMAN	SOMAN
		Interoffice Transport-Dedicated-2W VG-Per Mile or Fraction Mile			UEPRG	U1TVM	0.0057	0.00	0.00								
	2-WIRE VOICE GRADE LOOP WITH 2-WIRE LINE PORT (BUS - PBX)																
	UNE Port/Loop Combination Rates																
		2W VG Loop/Port Combo-Zone 1					11.46										
		2W VG Loop/Port Combo-Zone 2					16.76										
		2W VG Loop/Port Combo-Zone 3					33.56										
	UNE Loop Rates																
		2W VG Loop (SL 1)-Zone 1		1	UEPPX	UEPLX	9.56										
		2W VG Loop (SL 1)-Zone 2		2	UEPPX	UEPLX	14.86										
		2W VG Loop (SL 1)-Zone 3		3	UEPPX	UEPLX	31.66										
	2-Wire Voice Grade Line Port Rates (BUS - PBX)																
		Line Side Unbundled Combination 2-Way PBX Trunk Port-Bus			UEPPX	UEPPC	1.9019	10.05	7.36	1.37	1.28						
		Line Side Unbundled Outward PBX Trunk Port-Bus			UEPPX	UEPPO	1.9019	10.05	7.36	1.37	1.28						
		Line Side Unbundled Incoming PBX Trunk Port-Bus			UEPPX	UEPP1	1.9019	10.05	7.36	1.37	1.28						
		2W Voice Unbundled PBX LD Terminal Ports			UEPPX	UEPLD	1.9019	10.05	7.36	1.37	1.28						
		2W Voice Unbundled 2-Way Combination PBX Usage Port			UEPPX	UEPXA	1.9019	10.05	7.36	1.37	1.28						
		2W Voice Unbundled PBX Toll Terminal Hotel Ports			UEPPX	UEPXB	1.9019	10.05	7.36	1.37	1.28						
		2W Voice Unbundled PBX LD DDD Terminals Port			UEPPX	UEPXC	1.9019	10.05	7.36	1.37	1.28						
		2W Voice Unbundled PBX LD Terminal Switchboard Port			UEPPX	UEPXD	1.9019	10.05	7.36	1.37	1.28						
		2W Voice Unbundled PBX LD Terminal Switchboard IDD Capable Port			UEPPX	UEPXE	1.9019	10.05	7.36	1.37	1.28						
		2W Voice Unbundled 2-Way PBX Hotel/Hospital Economy Administrative Calling Port			UEPPX	UEPXL	1.9019	10.05	7.36	1.37	1.28						
		2W Voice Unbundled 2-Way PBX Hotel/Hospital Economy Rm Calling Port			UEPPX	UEPXM	1.9019	10.05	7.36	1.37	1.28						
		2W Voice Unbundled 1-Way Outgoing PBX Hotel/Hospital Discount Rm Calling Port			UEPPX	UEPXO	1.9019	10.05	7.36	1.37	1.28						
		2W Voice Unbundled 1-Way Outgoing PBX Measured Port			UEPPX	UEPXS	1.9019	10.05	7.36	1.37	1.28						
		2W voice unbundled GA basic dialing port-1-Way Oudial Trunk			UEPPX	UEPWS	1.9019	10.05	7.36	1.37	1.28						
		2W voice unbundled GA basic dialing port-2-Way Trunk			UEPPX	UEPWT	1.9019	10.05	7.36	1.37	1.28						
		2W voice unbundled GA basic dialing port-2-way PBX Trunk			UEPPX	UEPPQ	1.9019	10.05	7.36	1.37	1.28						
		2W voice unbundled GA basic dialing port-PBX LD Terminal Ports					1.9019	10.05	7.36	1.37	1.28						
		2W voice unbundled GA basic dialing port-PBX Toll Terminal Ports					1.9019	10.05	7.36	1.37	1.28						
		2W voice unbundled GA basic dialing port-PBX LD DDD Terminal Port					1.9019	10.05	7.36	1.37	1.28						
		2W voice unbundled GA basic dialing port-PBX LD Terminal Switchboard Port					1.9019	10.05	7.36	1.37	1.28						
		2W voice unbundled GA basic dialing port-PBX LD Terminal Switchboard DDD Capable Port					1.9019	10.05	7.36	1.37	1.28						
		2W voice unbundled GA basic dialing port-PBX 2-Way Trunk			UEPPX	UEPPC	1.9019	10.05	7.36	1.37	1.28						
	FEATURES																
		All Features Offered			UEPPX	UEPVF	0.775	0.00	0.00								
	NONRECURRING CHARGES (NRCs) - CURRENTLY COMBINED																
		2W VG Loop/ Line Port Combination (PBX)-Conversion-Switch-As-Is			UEPPX	USAC2		0.10	0.10								
		2W VG Loop/ Line Port Combination (PBX)-Conversion-Switch with Change			UEPPX	USACC		0.10	0.10								
	ADDITIONAL NRCs																
		2W VG Loop/ Line Port Combination (PBX)-Subsequent Activity			UEPPX	USAS2	0.00	0.00	0.00								
		PBX Subsequent Activity-Change/Rearrange Multiline Hunt Group						6.70	6.70								
		Unbundled Misc Rate Element, Tag Loop at End User Premise			UEPPX	URETL		8.33	0.83								
	OFF/ON PREMISES EXTENSION CHANNELS																
		Local Channel VG, per termination		1	UEPPX	P2JHX	11.57	79.85	24.65	18.92	7.87						
		Local Channel VG, per termination		2	UEPPX	P2JHX	16.95	79.85	24.65	18.92	7.87						
		Local Channel VG, per termination		3	UEPPX	P2JHX	33.08	79.85	24.65	18.92	7.87						
		Non-Wire Direct Serve Channel VG		1	UEPPX	SDD2X	12.74	56.92	7.70	4.40	0.02						
		Non-Wire Direct Serve Channel VG		2	UEPPX	SDD2X	19.76	56.92	7.70	4.40	0.02						
		Non-Wire Direct Serve Channel VG		3	UEPPX	SDD2X	37.18	56.92	7.70	4.40	0.02						
	INTEROFFICE TRANSPORT																
		Interoffice Transport-Dedicated-2W VG-Facility Termination			UEPPX	U1TV2	12.87	48.46	19.48	16.58	5.00						

UNBUNDLED NETWORK ELEMENTS - Georgia														Attachment: 2 Exh A			
CATEGORY	RATE ELEMENTS	Interim	Zone	BCS	USOC	RATES($)					Svc Order Submitted Elec per LSR	Svc Order Submitted Manually per LSR	Incremental Charge - Manual Svc Order vs. Electronic-1st	Incremental Charge - Manual Svc Order vs. Electronic-Add'l	Incremental Charge - Manual Svc Order vs. Electronic-Disc 1st	Incremental Charge - Manual Svc Order vs. Electronic-Disc Add'l
							Nonrecurring		NRC Disconnect		OSS Rates($)					
						Rec	First	Add'l	First	Add'l	SOMEC	SOMAN	SOMAN	SOMAN	SOMAN	SOMAN
	Interoffice Transport-Dedicated-2W VG-Per Mile or Fraction Mile			UEPPX	U1TVM	0.0057	0.00	0.00								
2-WIRE VOICE GRADE LOOP WITH 2-WIRE ANALOG LINE COIN PORT																
UNE Port/Loop Combination Rates																
	2W VG Coin Port/Loop Combo – Zone 1					11.46										
	2W VG Coin Port/Loop Combo – Zone 2					16.76										
	2W VG Coin Port/Loop Combo – Zone 3					33.56										
UNE Loop Rates																
	2W VG Loop (SL1)-Zone 1		1	UEPCO	UEPLX	9.56										
	2W VG Loop (SL1)-Zone 2		2	UEPCO	UEPLX	14.86										
	2W VG Loop (SL1)-Zone 3		3	UEPCO	UEPLX	31.66										
2-Wire Voice Grade Line Ports (COIN)																
	2W Coin 2-Way with Operator Screening (GA)			UEPCO	UEPGC	1.9019	10.05	7.36	1.37	1.28						
	2W Coin 2-Way with Operator Screening and Blocking: 011, 900/976, 1+DDD (GA)			UEPCO	UEP2G	1.9019	10.05	7.36	1.37	1.28						
	2W Coin 2-Way with Operator Screening and 011 Blocking (GA)			UEPCO	UEPGA	1.9019	10.05	7.36	1.37	1.28						
	2W Coin 2-Way with Operator Screening and 900/976 Blocking (GA)			UEPCO	UEPGB	1.9019	10.05	7.36	1.37	1.28						
	2W Coin 2-Way with Operator Screening and Blocking: 900/976, 1+DDD, 011+, and Local (GA)			UEPCO	UEPCH	1.9019	10.05	7.36	1.37	1.28						
	2W Coin Outward with Operator Screening and 011 Blocking (GA, KY, MS)			UEPCO	UEPRJ	1.9019	10.05	7.36	1.37	1.28						
	2W Coin Outward with Operator Screening and Blocking: 900/976, 1+DDD, 011+, and Local (FL, GA)			UEPCO	UEPCQ	1.9019	10.05	7.36	1.37	1.28						
	2W 2-Way Smartline with 900/976 (all states except LA)			UEPCO	UEPCK	1.9019	10.05	7.36	1.37	1.28						
	2W Coin Outward Smartline with 900/976 (all states except LA)			UEPCO	UEPCR	1.9019	10.05	7.36	1.37	1.28						
ADDITIONAL UNE COIN PORT/LOOP (RC)																
	UNE Coin Port/Loop Combo Usage (Flat Rate)			UEPCO	URECU	3.59	0.00	0.00	0.00	0.00						
NONRECURRING CHARGES - CURRENTLY COMBINED																
	2W VG Loop/Line Port Combination -Conversion-Switch-as-is			UEPCO	USAC2		0.10	0.10								
	2W VG Loop/Line Port Combination -Conversion-Switch with change			UEPCO	USACC		0.10	0.10								
ADDITIONAL NRCs																
	2W VG Loop/Line Port Combination-Subsequent Activity			UEPCO	USAS2		0.00	0.00								
	Unbundled Misc Rate Element, Tag Loop at End User Premise			UEPCO	URETL		8.33	0.83								
2-WIRE VOICE LOOP/ 2WIRE VOICE GRADE IO TRANSPORT/ 2-WIRE LINE PORT (RES)																
UNE Port/Loop Combination Rates																
	2W VG Loop/IO Tranport/Port Combo-Zone 1					26.53										
	2W VG Loop/IO Tranport/Port Combo-Zone 2					31.92										
	2W VG Loop/IO Tranport/Port Combo-Zone 3					48.04										
UNE Loop Rates																
	2W VG Loop (SL2)-Zone 1		1	UEPFR	UECF2	11.57										
	2W VG Loop (SL2)-Zone 2		2	UEPFR	UECF2	16.95										
	2W VG Loop (SL2)-Zone 3		3	UEPFR	UECF2	33.08										
2-Wire Voice Grade Line Port Rates (Res)																
	2W voice unbundled port-residence			UEPFR	UEPRL	2.09	166.05	43.66	41.89	15.44						
	2W voice unbundled port with Caller ID-res			UEPFR	UEPRC	2.09	166.05	43.66	41.89	15.44						
	2W voice unbundled port outgoing only-res			UEPFR	UEPRO	2.09	166.05	43.66	41.89	15.44						
	2W voice unbundles res, low usage line port with Caller ID (LUM)			UEPFR	UEPAP	2.09	166.05	43.66	41.89	15.44						
	2W voice unbundled GA basic dialing port, w/o Caller ID capability-res			UEPFR	UEPWC	2.09	166.05	43.66	41.89	15.44						
	2W voice unbundled GA basic dialing port for use with Caller ID-res			UEPFR	UEPWQ	2.09	166.05	43.66	41.89	15.44						
	2W voice unbundled GA basic dialing port-outgoing only			UEPFR	UEPWR	2.09	166.05	43.66	41.89	15.44						
INTEROFFICE TRANSPORT																
	Interoffice Transport-Dedicated-2W VG-Facility Termination			UEPFR	U1TV2	12.87	48.46	19.48	16.58	5.00						
	Interoffice Transport-Dedicated-2W VG-Per Mile or Fraction Mile			UEPFR	1L5XX	0.0057	0.00	0.00								
FEATURES																
	All Features Offered			UEPFR	UEPVF	0.775	0.00	0.00								
NONRECURRING CHARGES (NRCs) - CURRENTLY COMBINED																
	2W Loop/Dedicated IO Transport/2W Line Port Combination-Conversion-Switch-as-is			UEPFR	USAC2		7.85	1.86								

CATEGORY	RATE ELEMENTS	Interim	Zone	BCS	USOC	RATES($)					Svc Order Submitted Elec per LSR	Svc Order Submitted Manually per LSR	Incremental Charge - Manual Svc Order vs. Electronic-1st	Incremental Charge - Manual Svc Order vs. Electronic-Add'l	Incremental Charge - Manual Svc Order vs. Electronic-Disc 1st	Incremental Charge - Manual Svc Order vs. Electronic-Disc Add'l
							Nonrecurring		NRC Disconnect		OSS Rates($)					
						Rec	First	Add'l	First	Add'l	SOMEC	SOMAN	SOMAN	SOMAN	SOMAN	SOMAN
	2W Loop/Dedicated IO Transport/2W Line Port Combination-Conversion-Switch-With-Change			UEPFR	USACC		7.85	1.86								
	Unbundled Misc Rate Element, Tag Designed Loop at End User Premise			UEPFR	URETN		11.19	1.10								
2-WIRE VOICE LOOP/ 2WIRE VOICE GRADE IO TRANSPORT/ 2-WIRE LINE PORT (BUS)																
UNE Port/Loop Combination Rates																
	2W VG Loop/IO Tranport/Port Combo-Zone 1					26.53										
	2W VG Loop/IO Tranport/Port Combo-Zone 2					31.92										
	2W VG Loop/IO Tranport/Port Combo-Zone 3					48.04										
UNE Loop Rates																
	2W VG Loop (SL2)-Zone 1		1	UEPFB	UECF2	11.57										
	2W VG Loop (SL2)-Zone 2		2	UEPFB	UECF2	16.95										
	2W VG Loop (SL2)-Zone 3		3	UEPFB	UECF2	33.08										
2-Wire Voice Grade Line Port (Bus)																
	2W voice unbundled port w/o Caller ID-bus			UEPFB	UEPBL	2.09	166.05	43.66	41.89	15.44						
	2W voice unbundled port with Caller + E484 ID-bus			UEPFB	UEPBC	2.09	166.05	43.66	41.89	15.44						
	2W voice unbundled port outgoing only-bus			UEPFB	UEPBO	2.09	166.05	43.66	41.89	15.44						
	2W voice unbundled incoming only port with Caller ID-Bus			UEPFB	UEPB1	2.09	166.05	43.66	41.89	15.44						
	2W voice unbundled GA basic dialing port, w/o Caller ID capability-bus			UEPFB	UEPWD	2.09	166.05	43.66	41.89	15.44						
	2W voice unbundled GA basic dialing port for use with Caller ID-bus			UEPFB	UEPWP	2.09	166.05	43.66	41.89	15.44						
INTEROFFICE TRANSPORT																
	Interoffice Transport-Dedicated-2W VG-Facility Termination			UEPFB	U1TV2	12.87	48.46	19.48	16.58	5.00						
	Interoffice Transport-Dedicated-2W VG-Per Mile or Fraction Mile			UEPFB	1L5XX	0.0057	0.00	0.00								
FEATURES																
	All Features Offered			UEPFB	UEPVF	0.775	0.00	0.00								
NONRECURRING CHARGES (NRCs) - CURRENTLY COMBINED																
	2W Loop/Dedicated IO Transport/2W Line Port Combination-Conversion-Switch-as-is			UEPFB	USAC2		7.85	1.86								
	2W Loop/Dedicated IO Transport/2W Line Port Combination-Conversion-Switch with change			UEPFB	USACC		7.85	1.86								
	Unbundled Misc Rate Element, Tag Designed Loop at End User Premise			UEPFB	URETN		11.19	1.10								
2-WIRE VOICE LOOP/ 2WIRE VOICE GRADE IO TRANSPORT/ 2-WIRE LINE PORT (PBX)																
UNE Port/Loop Combination Rates																
	2W VG Loop/IO Tranport/Port Combo-Zone 1					26.53										
	2W VG Loop/IO Tranport/Port Combo-Zone 2					31.92										
	2W VG Loop/IO Tranport/Port Combo-Zone 3					48.04										
UNE Loop Rates																
	2W VG Loop (SL2)-Zone 1		1	UEPFP	UECF2	11.57										
	2W VG Loop (SL2)-Zone 2		2	UEPFP	UECF2	16.95										
	2W VG Loop (SL2)-Zone 3		3	UEPFP	UECF2	33.08										
2-Wire Voice Grade Line Port Rates (BUS - PBX)																
	Line Side Unbundled Combination 2-Way PBX Trunk Port-Bus			UEPFP	UEPPC	2.09	166.05	43.66	41.89	15.44						
	Line Side Unbundled Outward PBX Trunk Port-Bus			UEPFP	UEPPO	2.09	166.05	43.66	41.89	15.44						
	Line Side Unbundled Incoming PBX Trunk Port-Bus			UEPFP	UEPP1	2.09	166.05	43.66	41.89	15.44						
	2W Voice Unbundled PBX LD Terminal Ports			UEPFP	UEPLD	2.09	166.05	43.66	41.89	15.44						
	2W Voice Unbundled 2-Way Combination PBX Usage Port			UEPFP	UEPXA	2.09	166.05	43.66	41.89	15.44						
	2W Voice Unbundled PBX Toll Terminal Hotel Ports			UEPFP	UEPXB	2.09	166.05	43.66	41.89	15.44						
	2W Voice Unbundled PBX LD DDD Terminals Port			UEPFP	UEPXC	2.09	166.05	43.66	41.89	15.44						
	2W Voice Unbundled PBX LD Terminal Switchboard Port			UEPFP	UEPXD	2.09	166.05	43.66	41.89	15.44						
	2W Voice Unbundled PBX LD Terminal Switchboard IDD Capable Port			UEPFP	UEPXE	2.09	166.05	43.66	41.89	15.44						
	2W Voice Unbundled 2-Way PBX Hotel/Hospital Economy Administrative Calling Port			UEPFP	UEPXL	2.09	166.05	43.66	41.89	15.44						
	2W Voice Unbundled 2-Way PBX Hotel/Hospital Economy Rm Calling Port			UEPFP	UEPXM	2.09	166.05	43.66	41.89	15.44						
	2W Voice Unbundled 1-Way Outgoing PBX Hotel/Hospital Discount Rm Calling Port			UEPFP	UEPXO	2.09	166.05	43.66	41.89	15.44						

UNBUNDLED NETWORK ELEMENTS - Georgia													Attachment: 2 Exh A			
CATEGORY	RATE ELEMENTS	Interim	Zone	BCS	USOC	RATES($)					Svc Order Submitted Elec per LSR	Svc Order Submitted Manually per LSR	Incremental Charge - Manual Svc Order vs. Electronic-1st	Incremental Charge - Manual Svc Order vs. Electronic-Add'l	Incremental Charge - Manual Svc Order vs. Electronic-Disc 1st	Incremental Charge - Manual Svc Order vs. Electronic-Disc Add'l
							Nonrecurring		NRC Disconnect		OSS Rates($)					
						Rec	First	Add'l	First	Add'l	SOMEC	SOMAN	SOMAN	SOMAN	SOMAN	SOMAN
	2W Voice Unbundled 1-Way Outgoing PBX Measured Port			UEPFP	UEPXS	2.09	166.05	43.66	41.89	15.44						
	2W voice unbundled GA basic dialing port-1-Way Oudial Trunk			UEPFP	UEPWS	2.09	166.05	43.66	41.89	15.44						
	2W voice unbundled GA basic dialing port-2-Way Trunk			UEPFP	UEPWT	2.09	166.05	43.66	41.89	15.44						
INTEROFFICE TRANSPORT																
	Interoffice Transport-Dedicated-2W VG-Facility Termination			UEPFP	U1TV2	12.87	48.46	19.48	16.58	5.00						
	Interoffice Transport-Dedicated-2W VG-Per Mile or Fraction Mile			UEPFP	1L5XX	0.0057	0.00	0.00								
FEATURES																
	All Features Offered			UEPFP	UEPVF	0.775	0.00	0.00								
NONRECURRING CHARGES (NRCs) - CURRENTLY COMBINED																
	2W Loop/Dedicated IO Transport/2W Line Port Combination-Conversion-Switch-as-is			UEPFP	USAC2		7.85	1.86								
	2W Loop/Dedicated IO Transport/2W Line Port Combination-Conversion-Switch with change			UEPFP	USACC		7.85	1.86								
	Unbundled Misc Rate Element, Tag Designed Loop at End User Premise			UEPFP	URETN		11.19	1.10								
2-WIRE VOICE GRADE LOOP- BUS ONLY - WITH 2-WIRE DID TRUNK PORT																
UNE Port/Loop Combination Rates																
	2W VG Loop/2W DID Trunk Port Combo-UNE Zone 1					18.05										
	2W VG Loop/2W DID Trunk Port Combo-UNE Zone 2					23.44										
	2W VG Loop/2W DID Trunk Port Combo-UNE Zone 3					39.56										
UNE Loop Rates																
	2W Analog VG Loop- (SL2)-UNE Zone 1		1	UEPPX	UECD1	11.57										
	2W Analog VG Loop- (SL2)-UNE Zone 2		2	UEPPX	UECD1	16.95										
	2W Analog VG Loop- (SL2)-UNE Zone 3		3	UEPPX	UECD1	33.08										
UNE Port Rate																
	Exchange Ports-2W DID Port			UEPPX	UEPD1	6.48	174.55	13.64	59.31	4.27						
NONRECURRING CHARGES - CURRENTLY COMBINED																
	2W VG Loop/2W DID Trunk Port Combination -Switch-as-is			UEPPX	USAC1		6.66	1.86								
	2W VG Loop/2W DID Trunk Port Conversion with BellSouth Allowable Changes			UEPPX	USA1C		6.66	1.86								
ADDITIONAL NRCs																
	Unbundled Misc Rate Element, Tag Designed Loop at End User Premise			UEPPX	URETN		11.19	1.10								
Telephone Number/Trunk Group Establisment Charges																
	DID Trunk Termination (One Per Port)			UEPPX	NDT	0.00	0.00	0.00								
	DID Numbers, Establish Trunk Group and Provide First Group of 20 DID Numbers			UEPPX	NDZ	0.00	0.00	0.00								
	Additional DID Numbers for each Group of 20 DID Numbers			UEPPX	ND4	0.00	0.00	0.00								
	DID Numbers, Non- consecutive DID Numbers , Per Number			UEPPX	ND5	0.00	0.00	0.00								
	Reserve Non-Consecutive DID numbers			UEPPX	ND6	0.00	0.00	0.00								
	Reserve DID Numbers			UEPPX	NDV	0.00	0.00	0.00								
2-WIRE ISDN DIGITAL GRADE LOOP WITH 2-WIRE ISDN DIGITAL LINE SIDE PORT																
UNE Port/Loop Combination Rates																
	2W ISDN Digital Grade Loop/2W ISDN Digital Line Side Port -UNE Zone 1					20.44										
	2W ISDN Digital Grade Loop/2W ISDN Digital Line Side Port -UNE Zone 2					25.45										
	2W ISDN Digital Grade Loop/2W ISDN Digital Line Side Port -UNE Zone 3					39.09										
UNE Loop Rates																
	2W ISDN Digital Grade Loop-UNE Zone 1		1	UEPPB UEPPR	USL2X	14.25										
	2W ISDN Digital Grade Loop-UNE Zone 2		2	UEPPB UEPPR	USL2X	19.26										
	2W ISDN Digital Grade Loop-UNE Zone 3		3	UEPPB UEPPR	USL2X	32.90										
UNE Port Rate																
	Exchange Port-2W ISDN Line Side Port			UEPPR	UEPPR	6.19	161.36	141.68	43.68	8.37						
	Exchange Port-2W ISDN Line Side Port			UEPPB	UEPPB	6.19	161.36	141.68	43.68	8.37						
NONRECURRING CHARGES - CURRENTLY COMBINED																

UNBUNDLED NETWORK ELEMENTS - Georgia														Attachment: 2 Exh A			
CATEGORY	RATE ELEMENTS	Interim	Zone	BCS	USOC	RATES($)					Svc Order Submitted Elec per LSR	Svc Order Submitted Manually per LSR	Incremental Charge - Manual Svc Order vs. Electronic-1st	Incremental Charge - Manual Svc Order vs. Electronic-Add'l	Incremental Charge - Manual Svc Order vs. Electronic-Disc 1st	Incremental Charge - Manual Svc Order vs. Electronic-Disc Add'l
							Nonrecurring		NRC Disconnect		OSS Rates($)					
						Rec	First	Add'l	First	Add'l	SOMEC	SOMAN	SOMAN	SOMAN	SOMAN	SOMAN
	2W ISDN Digital Grade Loop/2W ISDN Line Side Port Combination-Conversion			UEPPB UEPPR	USACB	0.00	42.52	26.99								
ADDITIONAL NRCs																
	2W ISDN Loop/2W ISDN Port Combination-Sub Actvy-Non Feature/Add Trunk			UEPPB UEPPR	USASB		0.00									
	Unbundled Misc Rate Element, Tag Designed Loop at End User Premise			UEPPB UEPPR	URETN		11.19	1.10								
	Unbundled Misc Rate Element, Tag Loop at End User Premise			UEPPB UEPPR	URETL		8.33	0.83								
B-CHANNEL USER PROFILE ACCESS:																
	CVS/CSD (DMS/5ESS)			UEPPB UEPPR	U1UCA	0.00	0.00	0.00								
	CVS (EWSD)			UEPPB UEPPR	U1UCB	0.00	0.00	0.00								
	CSD			UEPPB UEPPR	U1UCC	0.00	0.00	0.00								
B-CHANNEL AREA PLUS USER PROFILE ACCESS: (AL,KY,LA,MS SC,MS, & TN)																
USER TERMINAL PROFILE																
	User Terminal Profile (EWSD only)			UEPPB UEPPR	U1UMA	0.00	0.00	0.00								
VERTICAL FEATURES																
	All Vertical Features-One per Channel B User Profile			UEPPB UEPPR	UEPVF	0.775	0.00	0.00								
INTEROFFICE CHANNEL MILEAGE																
	Interoffice Channel mileage each, including first mile and facilities termination			UEPPB UEPPR	M1GNC	12.8757	48.46	19.48	16.58	5.00						
	Interoffice Channel mileage each, additional mile			UEPPB UEPPR	M1GNM	0.0057	0.00	0.00								
UNBUNDLED CENTREX PORT/LOOP COMBINATIONS - COST BASED RATES																
UNE-P CENTREX - 1AESS - (Valid in AL,FL,GA,KY,LA,MS,&TN only)																
2-Wire VG Loop/2-Wire Voice Grade Port (Centrex) Combo																
UNE Port/Loop Combination Rates (Non-Design)																
	2W VG Loop/2W VG Port (Centrex) Port Combo-Non-Design					11.46										
	2W VG Loop/2W VG Port (Centrex)Port Combo-Non-Design					16.76										
	2W VG Loop/2W VG Port (Centrex)Port Combo-Non-Design					33.56										
UNE Port/Loop Combination Rates (Design)																
	2W VG Loop/2W VG Port (Centrex) Port Combo-Design					13.47										
	2W VG Loop/2W VG Port (Centrex)Port Combo-Design					18.85										
	2W VG Loop/2W VG Port (Centrex)Port Combo-Design					34.98										
UNE Loop Rate																
	2W VG Loop (SL 1)-Zone 1		1	UEP91	UECS1	9.56										
	2W VG Loop (SL 1)-Zone 2		2	UEP91	UECS1	14.86										
	2W VG Loop (SL 1)-Zone 3		3	UEP91	UECS1	31.66										
	2W VG Loop (SL 2)-Zone 1		1	UEP91	UECS2	11.57										
	2W VG Loop (SL 2)-Zone 2		2	UEP91	UECS2	16.95										
	2W VG Loop (SL 2)-Zone 3		3	UEP91	UECS2	33.08										
UNE Ports																
All States (Except North Carolina and Sout Carolina)																
	2W VG Port (Centrex) Basic Local Area			UEP91	UEPYA	1.9019	10.05	7.36	1.37	1.28						
	2W VG Port (Centrex 800 termination)Basic Local Area			UEP91	UEPYB	1.9019	10.05	7.36	1.37	1.28						
	2W VG Port (Centrex with Caller ID)Note1 Basic Local Area			UEP91	UEPYH	1.9019	10.05	7.36	1.37	1.28						
	2W VG Port (Centrex from diff SWC) Note 2, 3 Basic Local Area			UEP91	UEPYM	1.9019	82.27	26.96	20.29	9.15						
	2W VG Port, Diff SWC-800 Service Term-Basic Local Area			UEP91	UEPYZ	1.9019	82.27	26.96	20.29	9.15						
	2W VG Port terminated in on Megalink or equivalent-Basic Local Area			UEP91	UEPY9	1.9019	10.05	7.36	1.37	1.28						
	2W VG Port Terminated on 800 Service Term-Basic Local Area			UEP91	UEPY2	1.9019	10.05	7.36	1.37	1.28						
Georgia and Florida Only																
	2W VG Port (Centrex)			UEP91	UEPHA	1.9019	10.05	7.36	1.37	1.28						
	2W VG Port (Centrex 800 termination)			UEP91	UEPHB	1.9019	10.05	7.36	1.37	1.28						
	2W VG Port (Centrex with Caller ID)1			UEP91	UEPHH	1.9019	10.05	7.36	1.37	1.28						
	2W VG Port (Centrex from diff SWC)2,3			UEP91	UEPHM	1.9019	82.27	26.96	20.29	9.15						
	2W VG Port, Diff SWC 2,3-800 Service Term			UEP91	UEPHZ	1.9019	82.27	26.96	20.29	9.15						
	2W VG Port terminated in on Megalink or equivalent			UEP91	UEPH9	1.9019	10.05	7.36	1.37	1.28						
	2W VG Port Terminated on 800 Service Term			UEP91	UEPH2	1.9019	10.05	7.36	1.37	1.28						
Local Switching																
	Centrex Intercom Funtionality, per port			UEP91	URECS	0.4237										

UNBUNDLED NETWORK ELEMENTS - Georgia														Attachment: 2 Exh A			
CATEGORY		RATE ELEMENTS	Interim	Zone	BCS	USOC	RATES($)					Svc Order Submitted Elec per LSR	Svc Order Submitted Manually per LSR	Incremental Charge - Manual Svc Order vs. Electronic-1st	Incremental Charge - Manual Svc Order vs. Electronic-Add'l	Incremental Charge - Manual Svc Order vs. Electronic-Disc 1st	Incremental Charge - Manual Svc Order vs. Electronic-Disc Add'l
								Nonrecurring		NRC Disconnect		OSS Rates($)					
							Rec	First	Add'l	First	Add'l	SOMEC	SOMAN	SOMAN	SOMAN	SOMAN	SOMAN
	Features																
		All Standard Features Offered, per port			UEP91	UEPVF	0.775										
		All Select Features Offered, per port			UEP91	UEPVS	0.00	0.00									
		All Centrex Control Features Offered, per port			UEP91	UEPVC	0.00										
	NARS																
		Unbundled Network Access Register-Combination			UEP91	UARCX	0.00	0.00	0.00	0.00	0.00						
		Unbundled Network Access Register-Indial			UEP91	UAR1X	0.00	0.00	0.00	0.00	0.00						
		Unbundled Network Access Register-Outdial			UEP91	UAROX	0.00	0.00	0.00	0.00	0.00						
	Misc Terminations																
	2-Wire Trunk Side																
		Trunk Side Terminations, each			UEP91	CENA6	5.50	122.26	18.65	54.82	3.45						
	Interoffice Channel Mileage - 2-Wire																
		Interoffice Channel Facilities Termination-VG			UEP91	M1GBC	12.87	48.46	19.48	16.58	5.00						
		Interoffice Channel mileage, per mile or fraction of mile			UEP91	M1GBM	0.0057										
	Feature Activations (DS0) Centrex Loops on Channelized DS1 Service																
	D4 Channel Bank Feature Activations																
		Feature Activation on D-4 Channel Bank Centrex Loop Slot			UEP91	1PQWS	0.4689										
		Feature Activation on D-4 Channel Bank FX line Side Loop Slot			UEP91	1PQW6	0.4689										
		Feature Activation on D-4 Channel Bank FX Trunk Side Loop Slot			UEP91	1PQW7	0.4689										
		Feature Activation on D-4 Channel Bank Centrex Loop Slot-Different WC			UEP91	1PQWP	0.4689										
		Feature Activation on D-4 Channel Bank Private Line Loop Slot			UEP91	1PQWV	0.4689										
		Feature Activation on D-4 Channel Bank Tjie Line/Trunk Loop Slot			UEP91	1PQWQ	0.4689										
		Feature Activation on D-4 Channel Bank WATS Loop Slot			UEP91	1PQWA	0.4689										
	Non-Recurring Charges (NRC) Associated with UNE-P Centrex																
		Conversion-Currently Combined Switch-As-Is with allowed changes, per port			UEP91	USAC2		0.10	0.10								
		New Centrex Standard Common Block			UEP91	M1ACS	0.00	317.90	37.59	48.99	5.92						
		New Centrex Customized Common Block			UEP91	M1ACC	0.00	317.90	37.59	48.99	5.92						
		Secondary Block, per Block			UEP91	M2CC1	0.00	77.10									
		NAR Establishment Charge, Per Occasion			UEP91	URECA	0.00	0.00									
	Additional Non-Recurring Charges (NRC)																
		Unbundled Misc Rate Element, Tag Loop at End Use Premise			UEP91	URETL		8.33	0.83								
		Unbundled Misc Rate Element, Tag Design Loop at End Use Premise			UEP91	URETN		11.19	1.10								
	UNE-P CENTREX - 5ESS (Valid in All States)																
	2-Wire VG Loop/2-Wire Voice Grade Port (Centrex) Combo																
	UNE Port/Loop Combination Rates (Non-Design)																
		2W VG Loop/2W VG Port (Centrex) Port Combo-Non-Design					11.46										
		2W VG Loop/2W VG Port (Centrex)Port Combo-Non-Design					16.76										
		2W VG Loop/2W VG Port (Centrex)Port Combo-Non-Design					33.56										
	UNE Port/Loop Combination Rates (Design)																
		2W VG Loop/2W VG Port (Centrex) Port Combo-Design					13.47										
		2W VG Loop/2W VG Port (Centrex)Port Combo-Design					18.85										
		2W VG Loop/2W VG Port (Centrex)Port Combo-Design					34.98										
	UNE Loop Rate																
		2W VG Loop (SL 1)-Zone 1		1	UEP95	UECS1	9.56										
		2W VG Loop (SL 1)-Zone 2		2	UEP95	UECS1	14.86										
		2W VG Loop (SL 1)-Zone 3		3	UEP95	UECS1	31.66										
		2W VG Loop (SL 2)-Zone 1		1	UEP95	UECS2	11.57										
		2W VG Loop (SL 2)-Zone 2		2	UEP95	UECS2	16.95										
		2W VG Loop (SL 2)-Zone 3		3	UEP95	UECS2	33.08										
	UNE Port Rate																
	All States																
		2W VG Port (Centrex) Basic Local Area			UEP95	UEPYA	1.9019	10.05	7.36	1.37	1.28						
		2W VG Port (Centrex 800 termination)			UEP95	UEPYB	1.9019	10.05	7.36	1.37	1.28						
		2W VG Port (Centrex with Caller ID)1Basic Local Area			UEP95	UEPYH	1.9019	10.05	7.36	1.37	1.28						
		2W VG Port (Centrex from diff SWC)2,3 Basic Local Area			UEP95	UEPYM	1.9019	82.27	26.96	20.29	9.15						
		2W VG Port, Diff SWC 2,3-800 Service Term-Basic Local Area			UEP95	UEPYZ	1.9019	82.27	26.96	20.29	9.15						

CATEGORY	RATE ELEMENTS	Interim	Zone	BCS	USOC	RATES($)					Svc Order Submitted Elec per LSR	Svc Order Submitted Manually per LSR	Incremental Charge - Manual Svc Order vs. Electronic-1st	Incremental Charge - Manual Svc Order vs. Electronic-Add'l	Incremental Charge - Manual Svc Order vs. Electronic-Disc 1st	Incremental Charge - Manual Svc Order vs. Electronic-Disc Add'l
							Nonrecurring		NRC Disconnect		OSS Rates($)					
						Rec	First	Add'l	First	Add'l	SOMEC	SOMAN	SOMAN	SOMAN	SOMAN	SOMAN
	2W VG Port terminated in on Megalink or equivalent-Basic Local Area			UEP95	UEPY9	1.9019	10.05	7.36	1.37	1.28						
	2W VG Port Terminated on 800 Service Term-Basic Local Area			UEP95	UEPY2	1.9019	10.05	7.36	1.37	1.28						
FL & GA Only																
	2W VG Port (Centrex)			UEP95	UEPHA	1.9019	10.05	7.36	1.37	1.28						
	2W VG Port (Centrex 800 termination)			UEP95	UEPHB	1.9019	10.05	7.36	1.37	1.28						
	2W VG Port (Centrex with Caller ID)1			UEP95	UEPHH	1.9019	10.05	7.36	1.37	1.28						
	2W VG Port (Centrex from diff SWC)2,3			UEP95	UEPHM	1.9019	82.27	26.96	20.29	9.15						
	2W VG Port, Diff SWC-800 Service Term 2,3			UEP95	UEPHZ	1.9019	82.27	26.96	20.29	9.15						
	2W VG Port terminated in on Megalink or equivalent			UEP95	UEPH9	1.9019	10.05	7.36	1.37	1.28						
	2W VG Port Terminated on 800 Service Term			UEP95	UEPH2	1.9019	10.05	7.36	1.37	1.28						
Local Switching																
	Centrex Intercom Funtionality, per port			UEP95	URECS	0.4237										
Features																
	All Standard Features Offered, per port			UEP95	UEPVF	0.775										
	All Select Features Offered, per port			UEP95	UEPVS	0.00	0.00									
	All Centrex Control Features Offered, per port			UEP95	UEPVC	0.00										
NARS																
	Unbundled Network Access Register-Combination			UEP95	UARCX	0.00	0.00	0.00	0.00	0.00						
	Unbundled Network Access Register-Indial			UEP95	UAR1X	0.00	0.00	0.00	0.00	0.00						
	Unbundled Network Access Register-Outdial			UEP95	UAROX	0.00	0.00	0.00	0.00	0.00						
Misc Terminations																
2-Wire Trunk Side																
	Trunk Side Terminations, each			UEP95	CEND6	5.50	122.26	18.65	54.82	3.45						
4-Wire Digital (1.544 Megabits)																
	DS1 Circuit Terminations, each			UEP95	M1HD1	41.20	200.96	93.00	65.81	2.33						
	DS0 Channels Activated, each			UEP95	M1HDO	0.00	13.95									
Interoffice Channel Mileage - 2-Wire																
	Interoffice Channel Facilities Termination			UEP95	M1GBC	12.87	48.46	19.48	16.58	5.00						
	Interoffice Channel mileage, per mile or fraction of mile			UEP95	M1GBM	0.0057										
Feature Activations (DS0) Centrex Loops on Channelized DS1 Service																
D4 Channel Bank Feature Activations																
	Feature Activation on D-4 Channel Bank Centrex Loop Slot			UEP95	1PQWS	0.4689										
	Feature Activation on D-4 Channel Bank FX line Side Loop Slot			UEP95	1PQW6	0.4689										
	Feature Activation on D-4 Channel Bank FX Trunk Side Loop Slot			UEP95	1PQW7	0.4689										
	Feature Activation on D-4 Channel Bank Centrex Loop Slot-Different WC			UEP95	1PQWP	0.4689										
	Feature Activation on D-4 Channel Bank Private Line Loop Slot			UEP95	1PQWV	0.4689										
	Feature Activation on D-4 Channel Bank Tjie Line/Trunk Loop Slot			UEP95	1PQWQ	0.4689										
	Feature Activation on D-4 Channel Bank WATS Loop Slot			UEP95	1PQWA	0.4689										
Non-Recurring Charges (NRC) Associated with UNE-P Centrex																
	NRC Conversion Currently Combined Switch-As-Is with allowed changes, per port			UEP95	USAC2		0.10	0.10								
	New Centrex Standard Common Block			UEP95	M1ACS	0.00	317.90	37.59	48.99	5.92						
	New Centrex Customized Common Block			UEP95	M1ACC	0.00	317.90	37.59	48.99	5.92						
	NAR Establishment Charge, Per Occasion			UEP95	URECA	0.00	0.00									
Additional Non-Recurring Charges (NRC)																
	Unbundled Misc Rate Element, Tag Loop at End Use Premise			UEP95	URETL		8.33	0.83								
	Unbundled Misc Rate Element, Tag Design Loop at End Use Premise			UEP95	URETN		11.19	1.10								
UNE-P CENTREX - DMS100 (Valid in All States)																
2-Wire VG Loop/2-Wire Voice Grade Port (Centrex) Combo																
UNE Port/Loop Combination Rates (Non-Design)																
	2W VG Loop/2W VG Port (Centrex) Port Combo-Non-Design					11.46										
	2W VG Loop/2W VG Port (Centrex)Port Combo-Non-Design					16.76										
	2W VG Loop/2W VG Port (Centrex)Port Combo-Non-Design					33.56										
UNE Port/Loop Combination Rates (Design)																
	2W VG Loop/2W VG Port (Centrex) Port Combo-Design					13.47										
	2W VG Loop/2W VG Port (Centrex)Port Combo-Design					18.85										

UNBUNDLED NETWORK ELEMENTS - Georgia														Attachment: 2 Exh A			
CATEGORY		RATE ELEMENTS	Interim	Zone	BCS	USOC	RATES($)					Svc Order Submitted Elec per LSR	Svc Order Submitted Manually per LSR	Incremental Charge - Manual Svc Order vs. Electronic-1st	Incremental Charge - Manual Svc Order vs. Electronic-Add'l	Incremental Charge - Manual Svc Order vs. Electronic-Disc 1st	Incremental Charge - Manual Svc Order vs. Electronic-Disc Add'l
								Nonrecurring		NRC Disconnect		OSS Rates($)					
							Rec	First	Add'l	First	Add'l	SOMEC	SOMAN	SOMAN	SOMAN	SOMAN	SOMAN
		2W VG Loop/2W VG Port (Centrex)Port Combo-Design					34.98										
	UNE Loop Rate																
		2W VG Loop (SL 1)-Zone 1		1	UEP9D	UECS1	9.56										
		2W VG Loop (SL 1)-Zone 2		2	UEP9D	UECS1	14.86										
		2W VG Loop (SL 1)-Zone 3		3	UEP9D	UECS1	31.66										
		2W VG Loop (SL 2)-Zone 1		1	UEP9D	UECS2	11.57										
		2W VG Loop (SL 2)-Zone 2		2	UEP9D	UECS2	16.95										
		2W VG Loop (SL 2)-Zone 3		3	UEP9D	UECS2	33.08										
	UNE Port Rate																
	ALL STATES																
		2W VG Port (Centrex) Basic Local Area			UEP9D	UEPYA	1.9019	10.05	7.36	1.37	1.28						
		2W VG Port (Centrex 800 termination)Basic Local Area			UEP9D	UEPYB	1.9019	10.05	7.36	1.37	1.28						
		2W VG Port (Centrex/EBS-PSET)3Basic Local Area			UEP9D	UEPYC	1.9019	10.05	7.36	1.37	1.28						
		2W VG Port (Centrex /EBS-M5009)3Basic Local Area			UEP9D	UEPYD	1.9019	10.05	7.36	1.37	1.28						
		2W VG Port (Centrex /EBS-M5209))3 Basic Local Area			UEP9D	UEPYE	1.9019	10.05	7.36	1.37	1.28						
		2W VG Port (Centrex /EBS-M5112))3 Basic Local Area			UEP9D	UEPYF	1.9019	10.05	7.36	1.37	1.28						
		2W VG Port (Centrex /EBS-M5312))3Basic Local Area			UEP9D	UEPYG	1.9019	10.05	7.36	1.37	1.28						
		2W VG Port (Centrex /EBS-M5008))3 Basic Local Area			UEP9D	UEPYT	1.9019	10.05	7.36	1.37	1.28						
		2W VG Port (Centrex/EBS-M5208))3 Basic Local Area			UEP9D	UEPYU	1.9019	10.05	7.36	1.37	1.28						
		2W VG Port (Centrex/EBS-M5216))3 Basic Local Area			UEP9D	UEPYV	1.9019	10.05	7.36	1.37	1.28						
		2W VG Port (Centrex/EBS-M5316))3 Basic Local Area			UEP9D	UEPY3	1.9019	10.05	7.36	1.37	1.28						
		2W VG Port (Centrex with Caller ID) Basic Local Area			UEP9D	UEPYH	1.9019	10.05	7.36	1.37	1.28						
		2W VG Port (Centrex/Caller ID/Msg Wtg Lamp Indication))4 Basic Local Area			UEP9D	UEPYW	1.9019	10.05	7.36	1.37	1.28						
		2W VG Port (Centrex/Msg Wtg Lamp Indication))4 Basic Local Area			UEP9D	UEPYJ	1.9019	10.05	7.36	1.37	1.28						
		2W VG Port (Centrex from diff SWC) 2,3-Basic Local Area			UEP9D	UEPYM	1.9019	82.27	26.96	20.29	9.15						
		2W VG Port (Centrex/differ SWC /EBS-PSET)2,3,4 Basic Local Area			UEP9D	UEPYO	1.9019	82.27	26.96	20.29	9.15						
		2W VG Port (Centrex/differ SWC /EBS-M5009)2,3,4 Basic Local Area			UEP9D	UEPYP	1.9019	82.27	26.96	20.29	9.15						
		2W VG Port (Centrex/differ SWC /EBS-5209)2,3,4 Basic Local Area			UEP9D	UEPYQ	1.9019	82.27	26.96	20.29	9.15						
		2W VG Port (Centrex/differ SWC /EBS-M5112)2,3,4 Basic Local Area			UEP9D	UEPYR	1.9019	82.27	26.96	20.29	9.15						
		2W VG Port (Centrex/differ SWC /EBS-M5312)2,3,4 Basic Local Area			UEP9D	UEPYS	1.9019	82.27	26.96	20.29	9.15						
		2W VG Port (Centrex/differ SWC /EBS-M5008)2,3,4 Basic Local Area			UEP9D	UEPY4	1.9019	82.27	26.96	20.29	9.15						
		2W VG Port (Centrex/differ SWC /EBS-M5208)2, 3 Basic Local Area			UEP9D	UEPY5	1.9019	82.27	26.96	20.29	9.15						
		2W VG Port (Centrex/differ SWC /EBS-M5216)2,3,4 Basic Local Area			UEP9D	UEPY6	1.9019	82.27	26.96	20.29	9.15						
		2W VG Port (Centrex/differ SWC /EBS-M5316)2,3,4 Basic Local Area			UEP9D	UEPY7	1.9019	82.27	26.96	20.29	9.15						
		2W VG Port, Diff SWC-800 Service Term 2,3			UEP9D	UEPYZ	1.9019	82.27	26.96	20.29	9.15						
		2W VG Port terminated in on Megalink or equivalent Basic Local Area			UEP9D	UEPY9	1.9019	10.05	7.36	1.37	1.28						
		2W VG Port Terminated on 800 Service Term Basic Local Area			UEP9D	UEPY2	1.9019	10.05	7.36	1.37	1.28						
	FL & GA Only																
		2W VG Port (Centrex)			UEP9D	UEPHA	1.9019	10.05	7.36	1.37	1.28						
		2W VG Port (Centrex 800 termination)			UEP9D	UEPHB	1.9019	10.05	7.36	1.37	1.28						
		2W VG Port (Centrex/EBS-PSET)4			UEP9D	UEPHC	1.9019	10.05	7.36	1.37	1.28						
		2W VG Port (Centrex /EBS-M5009)4			UEP9D	UEPHD	1.9019	10.05	7.36	1.37	1.28						
		2W VG Port (Centrex /EBS-M5209)4			UEP9D	UEPHE	1.9019	10.05	7.36	1.37	1.28						
		2W VG Port (Centrex /EBS-M5112)4			UEP9D	UEPHF	1.9019	10.05	7.36	1.37	1.28						
		2W VG Port (Centrex /EBS-M5312)4			UEP9D	UEPHG	1.9019	10.05	7.36	1.37	1.28						
		2W VG Port (Centrex /EBS-M5008)4			UEP9D	UEPHT	1.9019	10.05	7.36	1.37	1.28						
		2W VG Port (Centrex/EBS-M5208)4			UEP9D	UEPHU	1.9019	10.05	7.36	1.37	1.28						
		2W VG Port (Centrex/EBS-M5216)4			UEP9D	UEPHV	1.9019	10.05	7.36	1.37	1.28						
		2W VG Port (Centrex/EBS-M5316)4			UEP9D	UEPH3	1.9019	10.05	7.36	1.37	1.28						
		2W VG Port (Centrex with Caller ID)			UEP9D	UEPHH	1.9019	10.05	7.36	1.37	1.28						
		2W VG Port (Centrex/Caller ID/Msg Wtg Lamp Indication)4			UEP9D	UEPHW	1.9019	10.05	7.36	1.37	1.28						

UNBUNDLED NETWORK ELEMENTS - Georgia														Attachment: 2 Exh A			
CATEGORY	RATE ELEMENTS	Interim	Zone	BCS	USOC	RATES($)					Svc Order Submitted Elec per LSR	Svc Order Submitted Manually per LSR	Incremental Charge - Manual Svc Order vs. Electronic-1st	Incremental Charge - Manual Svc Order vs. Electronic-Add'l	Incremental Charge - Manual Svc Order vs. Electronic-Disc 1st	Incremental Charge - Manual Svc Order vs. Electronic-Disc Add'l
							Nonrecurring		NRC Disconnect		OSS Rates($)					
						Rec	First	Add'l	First	Add'l	SOMEC	SOMAN	SOMAN	SOMAN	SOMAN	SOMAN
	2W VG Port (Centrex/Msg Wtg Lamp Indication)4			UEP9D	UEPHJ	1.9019	10.05	7.36	1.37	1.28						
	2W VG Port (Centrex from diff SWC) 2,3			UEP9D	UEPHM	1.9019	82.27	26.96	20.29	9.15						
	2W VG Port (Centrex/differ SWC /EBS-PSET)2,3,4			UEP9D	UEPHO	1.9019	82.27	26.96	20.29	9.15						
	2W VG Port (Centrex/differ SWC /EBS-M5009)2,3,4			UEP9D	UEPHP	1.9019	82.27	26.96	20.29	9.15						
	2W VG Port (Centrex/differ SWC /EBS-5209)2,3,4			UEP9D	UEPHQ	1.9019	82.27	26.96	20.29	9.15						
	2W VG Port (Centrex/differ SWC /EBS-M5112)2,3,4			UEP9D	UEPHR	1.9019	82.27	26.96	20.29	9.15						
	2W VG Port (Centrex/differ SWC /EBS-M5312)2, 3,4			UEP9D	UEPHS	1.9019	82.27	26.96	20.29	9.15						
	2W VG Port (Centrex/differ SWC /EBS-M5008)2,3,4			UEP9D	UEPH4	1.9019	82.27	26.96	20.29	9.15						
	2W VG Port (Centrex/differ SWC /EBS-M5208)2,3,4			UEP9D	UEPH5	1.9019	82.27	26.96	20.29	9.15						
	2W VG Port (Centrex/differ SWC /EBS-M5216)2,3,4			UEP9D	UEPH6	1.9019	82.27	26.96	20.29	9.15						
	2W VG Port (Centrex/differ SWC /EBS-M5316)2,3,4			UEP9D	UEPH7	1.9019	82.27	26.96	20.29	9.15						
	2W VG Port, Diff SWC-800 Service Term 2,3			UEP9D	UEPHZ	1.9019	82.27	26.96	20.29	9.15						
	2W VG Port terminated in on Megalink or equivalent			UEP9D	UEPH9	1.9019	10.05	7.36	1.37	1.28						
	2W VG Port Terminated on 800 Service Term			UEP9D	UEPH2	1.9019	10.05	7.36	1.37	1.28						
Local Switching																
	Centrex Intercom Funtionality, per port			UEP9D	URECS	0.4237										
	All Select Features Offered, per port			UEP9D	UEPVS	0.00	0.00									
	All Centrex Control Features Offered, per port			UEP9D	UEPVC	0.00										
NARS																
	Unbundled Network Access Register-Combination			UEP9D	UARCX	0.00	0.00	0.00	0.00	0.00						
	Unbundled Network Access Register-Inward			UEP9D	UAR1X	0.00	0.00	0.00	0.00	0.00						
	Unbundled Network Access Register-Outdial			UEP9D	UAROX	0.00	0.00	0.00	0.00	0.00						
Misc Terminations																
2-Wire Trunk Side																
	Trunk Side Terminations, each			UEP9D	CEND6	5.50	122.26	18.65	54.82	3.45						
4-Wire Digital (1.544 Megabits)																
	DS1 Circuit Terminations, each			UEP9D	M1HD1	41.20	200.96	93.00	65.81	2.33						
	DS0 Channels Activiated per Channel			UEP9D	M1HDO	0.00	13.95									
Interoffice Channel Mileage - 2-Wire																
	Interoffice Channel Facilities Termination			UEP9D	M1GBC	12.87	48.46	19.48	16.58	5.00						
	Interoffice Channel mileage, per mile or fraction of mile			UEP9D	M1GBM	0.0057										
Feature Activations (DS0) Centrex Loops on Channelized DS1 Service																
D4 Channel Bank Feature Activations																
	Feature Activation on D-4 Channel Bank Centrex Loop Slot			UEP9D	1PQWS	0.4689										
	Feature Activation on D-4 Channel Bank FX line Side Loop Slot			UEP9D	1PQW6	0.4689										
	Feature Activation on D-4 Channel Bank FX Trunk Side Loop Slot			UEP9D	1PQW7	0.4689										
	Feature Activation on D-4 Channel Bank Centrex Loop Slot-Different WC			UEP9D	1PQWP	0.4689										
	Feature Activation on D-4 Channel Bank Private Line Loop Slot			UEP9D	1PQWV	0.4689										
	Feature Activation on D-4 Channel Bank Tjie Line/Trunk Loop Slot			UEP9D	1PQWQ	0.4689										
	Feature Activation on D-4 Channel Bank WATS Loop Slot			UEP9D	1PQWA	0.4689										
Non-Recurring Charges (NRC) Associated with UNE-P Centrex																
	NRC Conversion Currently Combined Switch-As-Is with allowed changes, per port			UEP9D	USAC2		0.10	0.10								
	New Centrex Standard Common Block			UEP9D	M1ACS	0.00	317.90	37.59	48.99	5.92						
	New Centrex Customized Common Block			UEP9D	M1ACC	0.00	317.90	37.59	48.99	5.92						
	NAR Establishment Charge, Per Occasion			UEP9D	URECA	0.00	0.00									
Additional Non-Recurring Charges (NRC)																
	Unbundled Misc Rate Element, Tag Loop at End Use Premise			UEP9D	URETL		8.33	0.83								
	Unbundled Misc Rate Element, Tag Design Loop at End Use Premise			UEP9D	URETN		11.19	1.10								
Additional Non-Recurring Charges (NRC)																
	Unbundled Misc Rate Element, Tag Loop at End Use Premise			UEP9E	URETL											
	Unbundled Misc Rate Element, Tag Design Loop at End Use Premise			UEP9E	URETN											
Note 1 - Required Port for Centrex Control in 1AESS, 5ESS & EWSD																
Note 2 - Requres Interoffice Channel Mileage																
Note 3 - Installation is combination of Installation charge for SL2 Loop and Port																
Note 4 - Requires Specific Customer Premises Equipment																

UNBUNDLED NETWORK ELEMENTS - Georgia																Attachment: 2 Exh A			
CATEGORY		RATE ELEMENTS	Interim	Zone	BCS	USOC	RATES($)					Svc Order Submitted Elec per LSR	Svc Order Submitted Manually per LSR	Incremental Charge - Manual Svc Order vs. Electronic-1st	Incremental Charge - Manual Svc Order vs. Electronic-Add'l	Incremental Charge - Manual Svc Order vs. Electronic-Disc 1st	Incremental Charge - Manual Svc Order vs. Electronic-Disc Add'l
								Nonrecurring		NRC Disconnect		OSS Rates($)					
							Rec	First	Add'l	First	Add'l	SOMEC	SOMAN	SOMAN	SOMAN	SOMAN	SOMAN
	Note: Rates displaying an "I" in Interim column are interim as a result of a Commission order.																

UNBUNDLED NETWORK ELEMENTS - Kentucky														Attachment: 2 Exh A			
CATEGORY	RATE ELEMENTS	Interim	Zone	BCS	USOC	RATES($)					Svc Order Submitted Elec per LSR	Svc Order Submitted Manually per LSR	Incremental Charge - Manual Svc Order vs. Electronic-1st	Incremental Charge - Manual Svc Order vs. Electronic-Add'l	Incremental Charge - Manual Svc Order vs. Electronic-Disc 1st	Incremental Charge - Manual Svc Order vs. Electronic-Disc Add'l
							Nonrecurring		NRC Disconnect		OSS Rates($)					
						Rec	First	Add'l	First	Add'l	SOMEC	SOMAN	SOMAN	SOMAN	SOMAN	SOMAN
	The "Zone" shown in the sections for stand-alone loops or loops as part of a combination refers to Geographically Deaveraged UNE Zones. To view Geographically Deaveraged UNE Zone Designations by Central Office, refer to internet Website: http://www.interconnection.bellsouth.com/become_a_clec/html/interconnection.htm															
OPERATIONS SUPPORT SYSTEMS (OSS) - "REGIONAL RATES"																
	NOTE: (1) CLEC should contact its contract negotiator if it prefers the "state specific" OSS charges as ordered by the State Commissions. The OSS charges currently contained in this rate exhibit are the BellSouth "regional" service ordering charges. CLEC may elect either the state specific Commission ordered rates for the service ordering charges, or CLEC may elect the regional service ordering charge, however, CLEC can not obtain a mixture of the two regardless if CLEC has a interconnection contract															
	NOTE: (2) Any element that can be ordered electronically will be billed according to the SOMEC rate listed in this category. Please refer to BellSouth's Local Ordering Handbook (LOH) to determine if a product can be ordered electronically. For those elements that cannot be ordered electronically at present per the LOH, the listed SOMEC rate in this category reflects the charge that would be billed to a CLEC once electronic ordering capabilities come on-line for that element. Otherwise, the manual ordering charge,															
	OSS-Electronic Service Order Charge, Per Local Service Request (LSR)-UNE Only				SOMEC		3.50	0.00	3.50	0.00						
	OSS-Manual Service Order Charge, Per Local Service Request (LSR)-UNE Only				SOMAN		7.86	0.00	0.99	0.00						
UNE SERVICE DATE ADVANCEMENT CHARGE																
	NOTE: The Expedite charge will be maintained commensurate with BellSouth's FCC No.1 Tariff, Section 5 as applicable.															
	UNE Expedite Charge per Circuit or Line Assignable USOC, per Day			UAL, UEANL, UCL, UEF, UDF, UEQ, UDL, UENTW, UDN, UEA, UHL, ULC, USL, U1T12, U1T48, U1TD1, U1TD3, U1TDX, U1TO3, U1TS1, U1TVX, UC1BC, UC1BL, UC1CC, UC1CL, UC1DC, UC1DL, UC1EC, UC1EL, UC1FC, UC1FL, UC1GC, UC1GL, UC1HC, UC1HL, UDL12, UDL48, UDLO3, UDLSX, UE3, ULD12, ULD48, ULDD1, ULDD3, ULDDX, ULDO3, ULDS1, ULDVX, UNC1X, UNC3X, UNCDX, UNCNX, UNCSX, UNCVX, UNLD1, UNLD3, UXTD1, UXTD3, UXTS1, U1TUC, U1TUD, U1TUB, U1TUA,NTCVG, NTCUD, NTCD1	SDASP		200.00									
ORDER MODIFICATION CHARGE																
	Order Modification Charge (OMC)						33.37	0.00	0.00	0.00						
	Order Modification Additional Dispatch Charge (OMCAD)						150.00	0.00	0.00	0.00						
UNBUNDLED EXCHANGE ACCESS LOOP																
	2-WIRE ANALOG VOICE GRADE LOOP															
	2W Analog VG Loop- SL2 w/Loop or Ground Start Signaling-Zone 1		1	UEA	UEAL2	12.67	134.89	81.87	73.65	14.88						
	2W Analog VG Loop- SL2 w/Loop or Ground Start Signaling-Zone 2		2	UEA	UEAL2	17.45	134.89	81.87	73.65	14.88						
	2W Analog VG Loop- SL2 w/Loop or Ground Start Signaling-Zone 3		3	UEA	UEAL2	33.22	134.89	81.87	73.65	14.88						
	2W Analog VG Loop- SL2 w/Reverse Battery Signaling-Zone 1		1	UEA	UEAR2	12.67	134.89	81.87	73.65	14.88						
	2W Analog VG Loop- SL2 w/Reverse Battery Signaling-Zone 2		2	UEA	UEAR2	17.45	134.89	81.87	73.65	14.88						
	2W Analog VG Loop- SL2 w/Reverse Battery Signaling-Zone 3		3	UEA	UEAR2	33.22	134.89	81.87	73.65	14.88						
	Switch-As-Is Conversion rate per UNE Loop, Single LSR, (per DS0)			UEA	URESL		24.96	3.52								
	Switch-As-Is Conversion rate per UNE Loop, Spreadsheet, (per DS0)			UEA	URESP		26.44	5.01								
	CLEC to CLEC Conversion Charge w/o outside dispatch			UEA	UREWO		87.72	36.36								

CATEGORY	RATE ELEMENTS	Interim	Zone	BCS	USOC	RATES($)					Svc Order Submitted Elec per LSR	Svc Order Submitted Manually per LSR	Incremental Charge - Manual Svc Order vs. Electronic-1st	Incremental Charge - Manual Svc Order vs. Electronic-Add'l	Incremental Charge - Manual Svc Order vs. Electronic-Disc 1st	Incremental Charge - Manual Svc Order vs. Electronic-Disc Add'l
							Nonrecurring		NRC Disconnect		OSS Rates($)					
						Rec	First	Add'l	First	Add'l	SOMEC	SOMAN	SOMAN	SOMAN	SOMAN	SOMAN
	Loop Tagging-SL2 (SL2)			UEA	URETL		11.21	1.10								
4-WIRE ANALOG VOICE GRADE LOOP																
	4W Analog VG Loop-Zone 1		1	UEA	UEAL4	29.26	164.11	112.36	78.91	18.66						
	4W Analog VG Loop-Zone 2		2	UEA	UEAL4	34.25	164.11	112.36	78.91	18.66						
	4W Analog VG Loop-Zone 3		3	UEA	UEAL4	85.06	164.11	112.36	78.91	18.66						
	Switch-As-Is Conversion rate per UNE Loop, Single LSR, (per DS0)			UEA	URESL		24.96	3.52								
	Switch-As-Is Conversion rate per UNE Loop, Spreadsheet, (per DS0)			UEA	URESP		26.44	5.01								
	CLEC to CLEC Conversion Charge w/o outside dispatch			UEA	UREWO		87.72	36.36								
2-WIRE ISDN DIGITAL GRADE LOOP																
	2W ISDN Digital Grade Loop-Zone 1		1	UDN	U1L2X	18.44	146.77	95.02	71.38	13.83						
	2W ISDN Digital Grade Loop-Zone 2		2	UDN	U1L2X	25.08	146.77	95.02	71.38	13.83						
	2W ISDN Digital Grade Loop-Zone 3		3	UDN	U1L2X	42.87	146.77	95.02	71.38	13.83						
	CLEC to CLEC Conversion Charge w/o outside dispatch			UDN	UREWO		91.63	44.16								
2-WIRE ASYMMETRICAL DIGITAL SUBSCRIBER LINE (ADSL) COMPATIBLE LOOP																
	2W Unbundled ADSL Loop including manual service inquiry & facility reservation-Zone 1		1	UAL	UAL2X	10.82	141.98	79.73	69.02	11.47						
	2W Unbundled ADSL Loop including manual service inquiry & facility reservation-Zone 2		2	UAL	UAL2X	11.79	141.98	79.73	69.02	11.47						
	2W Unbundled ADSL Loop including manual service inquiry & facility reservation-Zone 3		3	UAL	UAL2X	12.87	141.98	79.73	69.02	11.47						
	2W Unbundled ADSL Loop w/o manual service inquiry & facility reservaton-Zone 1		1	UAL	UAL2W	10.82	121.18	69.00	69.09	11.54						
	2W Unbundled ADSL Loop w/o manual service inquiry & facility reservaton-Zone 2		2	UAL	UAL2W	11.79	121.18	69.00	69.09	11.54						
	2W Unbundled ADSL Loop w/o manual service inquiry & facility reservaton-Zone 3		3	UAL	UAL2W	12.87	121.18	69.00	69.09	11.54						
	CLEC to CLEC Conversion Charge w/o outside dispatch			UAL	UREWO		86.20	40.40								
2-WIRE HIGH BIT RATE DIGITAL SUBSCRIBER LINE (HDSL) COMPATIBLE LOOP																
	2W Unbundled HDSL Loop including manual service inquiry & facility reservation-Zone 1		1	UHL	UHL2X	8.75	151.54	89.29	69.09	11.54						
	2W Unbundled HDSL Loop including manual service inquiry & facility reservation-Zone 2		2	UHL	UHL2X	9.56	151.54	89.29	69.09	11.54						
	2W Unbundled HDSL Loop including manual service inquiry & facility reservation-Zone 3		3	UHL	UHL2X	10.61	151.54	89.29	69.09	11.54						
	2W Unbundled HDSL Loop w/o manual service inquiry and facility reservation-Zone 1		1	UHL	UHL2W	8.75	130.74	78.56	69.09	11.54						
	2W Unbundled HDSL Loop w/o manual service inquiry and facility reservation-Zone 2		2	UHL	UHL2W	9.56	130.74	78.56	69.09	11.54						
	2W Unbundled HDSL Loop w/o manual service inquiry and facility reservation-Zone 3		3	UHL	UHL2W	10.61	130.74	78.56	69.09	11.54						
	CLEC to CLEC Conversion Charge w/o outside dispatch			UHL	UREWO		86.14	40.40								
4-WIRE HIGH BIT RATE DIGITAL SUBSCRIBER LINE (HDSL) COMPATIBLE LOOP																
	4 Wire Unbundled HDSL Loop including manual service inquiry and facility reservation-Zone 1		1	UHL	UHL4X	13.95	185.75	123.50	74.95	14.69						
	4W Unbundled HDSL Loop including manual service inquiry and facility reservation-Zone 2		2	UHL	UHL4X	15.68	185.75	123.50	74.95	14.69						
	4W Unbundled HDSL Loop including manual service inquiry and facility reservation-Zone 3		3	UHL	UHL4X	16.98	185.75	123.50	74.95	14.69						
	4W Unbundled HDSL Loop w/o manual service inquiry and facility reservation-Zone 1		1	UHL	UHL4W	13.95	164.95	114.04	77.32	15.80						
	4W Unbundled HDSL Loop w/o manual service inquiry and facility reservation-Zone 2		2	UHL	UHL4W	15.68	164.95	114.04	77.32	15.80						
	4W Unbundled HDSL Loop w/o manual service inquiry and facility reservation-Zone 3		3	UHL	UHL4W	16.98	164.95	114.04	77.32	15.80						
	CLEC to CLEC Conversion Charge w/o outside dispatch			UHL	UREWO		86.14	40.40								
4-WIRE DS1 DIGITAL LOOP																
	4W DS1 Digital Loop-Zone 1		1	USL	USLXX	86.47	306.69	174.44	65.83	14.55						
	4W DS1 Digital Loop-Zone 2		2	USL	USLXX	114.10	306.69	174.44	65.83	14.55						
	4W DS1 Digital Loop-Zone 3		3	USL	USLXX	297.76	306.69	174.44	65.83	14.55						

CATEGORY	RATE ELEMENTS	Interim	Zone	BCS	USOC	RATES($)					Svc Order Submitted Elec per LSR	Svc Order Submitted Manually per LSR	Incremental Charge - Manual Svc Order vs. Electronic-1st	Incremental Charge - Manual Svc Order vs. Electronic-Add'l	Incremental Charge - Manual Svc Order vs. Electronic-Disc 1st	Incremental Charge - Manual Svc Order vs. Electronic-Disc Add'l
							Nonrecurring		NRC Disconnect		OSS Rates($)					
						Rec	First	Add'l	First	Add'l	SOMEC	SOMAN	SOMAN	SOMAN	SOMAN	SOMAN
	Switch-As-Is Conversion rate per UNE Loop, Single LSR, (per DS1)			USL	URESL		24.96	3.52								
	Switch-As-Is Conversion rate per UNE Loop, Spreadsheet, (per DS1)			USL	URESP		26.44	5.01								
	CLEC to CLEC Conversion Charge w/o outside dispatch			USL	UREWO		101.09	43.04								
4-WIRE 19.2, 56 OR 64 KBPS DIGITAL GRADE LOOP																
	4 Wire Unbundled Digital Loop 2.4 Kbps-Zone 1		1	UDL	UDL2X	27.59	157.81	106.06	78.91	18.66						
	4 Wire Unbundled Digital Loop 2.4 Kbps-Zone 2		2	UDL	UDL2X	32.48	157.81	106.06	78.91	18.66						
	4 Wire Unbundled Digital Loop 2.4 Kbps-Zone 3		3	UDL	UDL2X	36.37	157.81	106.06	78.91	18.66						
	4 Wire Unbundled Digital Loop 4.8 Kbps-Zone 1		1	UDL	UDL4X	27.59	157.81	106.06	78.91	18.66						
	4 Wire Unbundled Digital Loop 4.8 Kbps-Zone 2		2	UDL	UDL4X	32.48	157.81	106.06	78.91	18.66						
	4 Wire Unbundled Digital Loop 4.8 Kbps-Zone 3		3	UDL	UDL4X	36.37	157.81	106.06	78.91	18.66						
	4 Wire Unbundled Digital Loop 9.6 Kbps-Zone 1		1	UDL	UDL9X	27.59	157.81	106.06	78.91	18.66						
	4 Wire Unbundled Digital Loop 9.6 Kbps-Zone 2		2	UDL	UDL9X	32.48	157.81	106.06	78.91	18.66						
	4 Wire Unbundled Digital Loop 9.6 Kbps-Zone 3		3	UDL	UDL9X	36.37	157.81	106.06	78.91	18.66						
	4 Wire Unbundled Digital 19.2 Kbps-Zone 1		1	UDL	UDL19	27.59	157.81	106.06	78.91	18.66						
	4 Wire Unbundled Digital 19.2 Kbps-Zone 2		2	UDL	UDL19	32.48	157.81	106.06	78.91	18.66						
	4 Wire Unbundled Digital 19.2 Kbps-Zone 3		3	UDL	UDL19	36.37	157.81	106.06	78.91	18.66						
	4 Wire Unbundled Digital Loop 56 Kbps-Zone 1		1	UDL	UDL56	27.59	157.81	106.06	78.91	18.66						
	4 Wire Unbundled Digital Loop 56 Kbps-Zone 2		2	UDL	UDL56	32.48	157.81	106.06	78.91	18.66						
	4 Wire Unbundled Digital Loop 56 Kbps-Zone 3		3	UDL	UDL56	36.37	157.81	106.06	78.91	18.66						
	4 Wire Unbundled Digital Loop 64 Kbps-Zone 1		1	UDL	UDL64	27.59	157.81	106.06	78.91	18.66						
	4 Wire Unbundled Digital Loop 64 Kbps-Zone 2		2	UDL	UDL64	32.48	157.81	106.06	78.91	18.66						
	4 Wire Unbundled Digital Loop 64 Kbps-Zone 3		3	UDL	UDL64	36.37	157.81	106.06	78.91	18.66						
	Switch-As-Is Conversion rate per UNE Loop, Single LSR, (per DS0)			UDL	URESL		24.96	3.52								
	Switch-As-Is Conversion rate per UNE Loop, Spreadsheet, (per DS0)			UDL	URESP		26.44	5.01								
	CLEC to CLEC Conversion Charge w/o outside dispatch			UDL	UREWO		102.13	49.75								
2-WIRE Unbundled COPPER LOOP																
	2W Unbundled Copper Loop-Designed including manual service inquiry & facility reservation-Zone 1		1	UCL	UCLPB	10.82	140.95	78.70	69.09	11.54						
	2W Unbundled Copper Loop-Designed including manual service inquiry & facility reservation-Zone 2		2	UCL	UCLPB	11.79	140.95	78.70	69.09	11.54						
	2W Unbundled Copper Loop-Designed including manual service inquiry & facility reservation-Zone 3		3	UCL	UCLPB	12.87	140.95	78.70	69.09	11.54						
	2W Unbundled Copper Loop-Designed w/o manual service inquiry and facility reservation-Zone 1		1	UCL	UCLPW	10.82	120.15	67.97	69.09	11.54						
	2W Unbundled Copper Loop-Designed w/o manual service inquiry and facility reservation-Zone 2		2	UCL	UCLPW	11.79	120.15	67.97	69.09	11.54						
	2W Unbundled Copper Loop-Designed w/o manual service inquiry and facility reservation-Zone 3		3	UCL	UCLPW	12.87	120.15	67.97	69.09	11.54						
	Order Coordination for Unbundled Copper Loops (per loop)			UCL	UCLMC		9.00	9.00								
	CLEC to CLEC Conversion Charge w/o outside dispatch (UCL-Des)			UCL	UREWO		97.23	42.48								
4-WIRE COPPER LOOP																
	4W Copper Loop-Designed including manual service inquiry and facility reservation-Zone 1		1	UCL	UCL4S	16.92	170.31	108.06	74.95	14.69						
	4W Copper Loop-Designed including manual service inquiry and facility reservation-Zone 2		2	UCL	UCL4S	17.36	170.31	108.06	74.95	14.69						
	4W Copper Loop-Designed including manual service inquiry and facility reservation-Zone 3		3	UCL	UCL4S	28.10	170.31	108.06	74.95	14.69						
	4W Copper Loop-Designed w/o manual service inquiry and facility reservation-Zone 1		1	UCL	UCL4W	16.92	149.52	97.33	74.95	14.69						
	4W Copper Loop-Designed w/o manual service inquiry and facility reservation-Zone 2		2	UCL	UCL4W	17.36	149.52	97.33	74.95	14.69						
	4W Copper Loop-Designed w/o manual service inquiry and facility reservation-Zone 3		3	UCL	UCL4W	28.10	149.52	97.33	74.95	14.69						
	CLEC to CLEC Conversion Charge w/o outside dispatch (UCL-Des)			UCL	UREWO		97.23	42.48								
	Order Coordination for Specified Conversion Time (per LSR)			UEA, UDN, UAL, UHL, UDL, USL	OCOSL		23.01									
Rearrangements																
	EEL to UNE-L Retermination, per 2W Unbundled Voice Loop-SL2			UEA	UREEL		87.72	36.36								
	EEL to UNE-L Retermination, per 4 Wire Unbundled Voice Loop			UEA	UREEL		87.72	36.36								

CATEGORY	RATE ELEMENTS	Interim	Zone	BCS	USOC	RATES($)					Svc Order Submitted Elec per LSR	Svc Order Submitted Manually per LSR	Incremental Charge - Manual Svc Order vs. Electronic-1st	Incremental Charge - Manual Svc Order vs. Electronic-Add'l	Incremental Charge - Manual Svc Order vs. Electronic-Disc 1st	Incremental Charge - Manual Svc Order vs. Electronic-Disc Add'l
							Nonrecurring		NRC Disconnect		OSS Rates($)					
						Rec	First	Add'l	First	Add'l	SOMEC	SOMAN	SOMAN	SOMAN	SOMAN	SOMAN
	EEL to UNE-L Retermination, per 2W ISDN Loop			UDN	UREEL		91.63	44.16								
	EEL to UNE-L Retermination, per 4 Wire Unbundled Digital Loop			UDL	UREEL		102.13	49.75								
	EEL to UNE-L Retermination, per 4 Wire Unbundled DS1 Loop			USL	UREEL		101.09	43.04								
UNE LOOP COMMINGLING																
2-WIRE ANALOG VOICE GRADE LOOP - COMMINGLING																
	2W Analog VG Loop- SL2 w/Loop or Ground Start Signaling-Zone 1		1	NTCVG	UEAL2	12.67	134.89	81.87	73.65	14.88						
	2W Analog VG Loop- SL2 w/Loop or Ground Start Signaling-Zone 2		2	NTCVG	UEAL2	17.45	134.89	81.87	73.65	14.88						
	2W Analog VG Loop- SL2 w/Loop or Ground Start Signaling-Zone 3		3	NTCVG	UEAL2	33.22	134.89	81.87	73.65	14.88						
	2W Analog VG Loop- SL2 w/Reverse Battery Signaling-Zone 1		1	NTCVG	UEAR2	12.67	134.89	81.87	73.65	14.88						
	2W Analog VG Loop- SL2 w/Reverse Battery Signaling-Zone 2		2	NTCVG	UEAR2	17.45	134.89	81.87	73.65	14.88						
	2W Analog VG Loop- SL2 w/Reverse Battery Signaling-Zone 3		3	NTCVG	UEAR2	33.22	134.89	81.87	73.65	14.88						
	Switch-As-Is Conversion rate per UNE Loop, Single LSR, (per DS0)			NTCVG	URESL		24.96	3.52								
	Switch-As-Is Conversion rate per UNE Loop, Spreadsheet, (per DS0)			NTCVG	URESP		26.44	5.01								
	CLEC to CLEC Conversion Charge w/o outside dispatch			NTCVG	UREWO		87.72	36.36								
	Loop Tagging-SL2 (SL2)			NTCVG	URETL		11.21	1.10								
4-WIRE ANALOG VOICE GRADE LOOP - COMMINGLING																
	4W Analog VG Loop-Zone 1		1	NTCVG	UEAL4	29.26	164.11	112.36	78.91	18.66						
	4W Analog VG Loop-Zone 2		2	NTCVG	UEAL4	34.25	164.11	112.36	78.91	18.66						
	4W Analog VG Loop-Zone 3		3	NTCVG	UEAL4	85.06	164.11	112.36	78.91	18.66						
	Switch-As-Is Conversion rate per UNE Loop, Single LSR, (per DS0)			NTCVG	URESL		24.96	3.52								
	Switch-As-Is Conversion rate per UNE Loop, Spreadsheet, (per DS0)			NTCVG	URESP		26.44	5.01								
	CLEC to CLEC Conversion Charge w/o outside dispatch			NTCVG	UREWO		87.72	36.36								
4-WIRE DS1 DIGITAL LOOP - COMMINGLING																
	4W DS1 Digital Loop-Zone 1		1	NTCD1	USLXX	86.47	306.69	174.44	65.83	14.55						
	4W DS1 Digital Loop-Zone 2		2	NTCD1	USLXX	114.10	306.69	174.44	65.83	14.55						
	4W DS1 Digital Loop-Zone 3		3	NTCD1	USLXX	297.76	306.69	174.44	65.83	14.55						
	Switch-As-Is Conversion rate per UNE Loop, Single LSR, (per DS1)			NTCD1	URESL		24.96	3.52								
	Switch-As-Is Conversion rate per UNE Loop, Spreadsheet, (per DS1)			NTCD1	URESP		26.44	5.01								
	CLEC to CLEC Conversion Charge w/o outside dispatch			NTCD1	UREWO		101.09	43.04								
4-WIRE 19.2, 56 OR 64 KBPS DIGITAL GRADE LOOP - COMMINGLING																
	4 Wire Unbundled Digital Loop 2.4 Kbps-Zone 1		1	NTCUD	UDL2X	27.59	157.81	106.06	78.91	18.66						
	4 Wire Unbundled Digital Loop 2.4 Kbps-Zone 2		2	NTCUD	UDL2X	32.48	157.81	106.06	78.91	18.66						
	4 Wire Unbundled Digital Loop 2.4 Kbps-Zone 3		3	NTCUD	UDL2X	36.37	157.81	106.06	78.91	18.66						
	4 Wire Unbundled Digital Loop 4.8 Kbps-Zone 1		1	NTCUD	UDL4X	27.59	157.81	106.06	78.91	18.66						
	4 Wire Unbundled Digital Loop 4.8 Kbps-Zone 2		2	NTCUD	UDL4X	32.48	157.81	106.06	78.91	18.66						
	4 Wire Unbundled Digital Loop 4.8 Kbps-Zone 3		3	NTCUD	UDL4X	36.37	157.81	106.06	78.91	18.66						
	4 Wire Unbundled Digital Loop 9.6 Kbps-Zone 1		1	NTCUD	UDL9X	27.59	157.81	106.06	78.91	18.66						
	4 Wire Unbundled Digital Loop 9.6 Kbps-Zone 2		2	NTCUD	UDL9X	32.48	157.81	106.06	78.91	18.66						
	4 Wire Unbundled Digital Loop 9.6 Kbps-Zone 3		3	NTCUD	UDL9X	36.37	157.81	106.06	78.91	18.66						
	4 Wire Unbundled Digital 19.2 Kbps-Zone 1		1	NTCUD	UDL19	27.59	157.81	106.06	78.91	18.66						
	4 Wire Unbundled Digital 19.2 Kbps-Zone 2		2	NTCUD	UDL19	32.48	157.81	106.06	78.91	18.66						
	4 Wire Unbundled Digital 19.2 Kbps-Zone 3		3	NTCUD	UDL19	36.37	157.81	106.06	78.91	18.66						
	4 Wire Unbundled Digital Loop 56 Kbps-Zone 1		1	NTCUD	UDL56	27.59	157.81	106.06	78.91	18.66						
	4 Wire Unbundled Digital Loop 56 Kbps-Zone 2		2	NTCUD	UDL56	32.48	157.81	106.06	78.91	18.66						
	4 Wire Unbundled Digital Loop 56 Kbps-Zone 3		3	NTCUD	UDL56	36.37	157.81	106.06	78.91	18.66						
	4 Wire Unbundled Digital Loop 64 Kbps-Zone 1		1	NTCUD	UDL64	27.59	157.81	106.06	78.91	18.66						
	4 Wire Unbundled Digital Loop 64 Kbps-Zone 2		2	NTCUD	UDL64	32.48	157.81	106.06	78.91	18.66						
	4 Wire Unbundled Digital Loop 64 Kbps-Zone 3		3	NTCUD	UDL64	36.37	157.81	106.06	78.91	18.66						
	Switch-As-Is Conversion rate per UNE Loop, Single LSR, (per DS0)			NTCUD	URESL		24.96	3.52								
	Switch-As-Is Conversion rate per UNE Loop, Spreadsheet, (per DS0)			NTCUD	URESP		26.44	5.01								
	CLEC to CLEC Conversion Charge w/o outside dispatch			NTCUD	UREWO		102.13	49.75								
	Order Coordination for Specified Conversion Time (per LSR)			NTCVG, NTCUD, NTCD1	OCOSL		23.01									
UNBUNDLED EXCHANGE ACCESS LOOP																
2-WIRE ANALOG VOICE GRADE LOOP																
	2W Analog VG Loop- Service Level 1- Zone 1		1	UEANL	UEAL2	10.56	46.66	22.57	26.65	7.65						
	2W Analog VG Loop- Service Level 1- Zone 2		2	UEANL	UEAL2	15.34	46.66	22.57	26.65	7.65						
	2W Analog VG Loop- Service Level 1- Zone 3		3	UEANL	UEAL2	31.11	46.66	22.57	26.65	7.65						
	2W Analog VG Loop- Service Level 1- Zone 1		1	UEANL	UEASL	10.56	46.66	22.57	26.65	7.65						

UNBUNDLED NETWORK ELEMENTS - Kentucky														Attachment: 2 Exh A			
CATEGORY		RATE ELEMENTS	Interim	Zone	BCS	USOC	RATES($)					Svc Order Submitted Elec per LSR	Svc Order Submitted Manually per LSR	Incremental Charge - Manual Svc Order vs. Electronic-1st	Incremental Charge - Manual Svc Order vs. Electronic-Add'l	Incremental Charge - Manual Svc Order vs. Electronic-Disc 1st	Incremental Charge - Manual Svc Order vs. Electronic-Disc Add'l
								Nonrecurring		NRC Disconnect		OSS Rates($)					
							Rec	First	Add'l	First	Add'l	SOMEC	SOMAN	SOMAN	SOMAN	SOMAN	SOMAN
		2W Analog VG Loop- Service Level 1- Zone 2		2	UEANL	UEASL	15.34	46.66	22.57	26.65	7.65						
		2W Analog VG Loop- Service Level 1- Zone 3		3	UEANL	UEASL	31.11	46.66	22.57	26.65	7.65						
		Tag Loop at End User Premise			UEANL	URETL		8.93	0.88								
		Loop Testing-Basic 1st Half Hour			UEANL	URET1		46.88	0.00								
		Loop Testing-Basic Additional Half Hour			UEANL	URETA		24.16	24.16								
		Manual Order Coordination for UVL-SL1s (per loop)			UEANL	UEAMC		9.00	9.00								
		Order Coordination for Specified Conversion Time for UVL-SL1 (per LSR)			UEANL	OCOSL		23.01	23.01								
		Unbundled Non-Design Voice Loop, billing for BST providing make-up (Engineering Information-E.I.)			UEANL	UEANM		13.49	13.49								
		CLEC to CLEC Conversion Charge w/o Outside Dispatch (UVL-SL1)			UEANL	UREWO		15.78	8.94								
	2-WIRE Unbundled COPPER LOOP																
		2W Unbundled Copper Loop-Non-Designed Zone 1		1	UEQ	UEQ2X	10.58	44.97	20.89	25.64	6.65						
		2W Unbundled Copper Loop-Non-Designed-Zone 2		2	UEQ	UEQ2X	11.51	44.97	20.89	25.64	6.65						
		2W Unbundled Copper Loop-Non-Designed-Zone 3		3	UEQ	UEQ2X	13.19	44.97	20.89	25.64	6.65						
		Tag Loop at End User Premise			UEQ	URETL		8.93	0.88								
		Loop Testing-Basic 1st Half Hour			UEQ	URET1		46.88	0.00								
		Loop Testing-Basic Additional Half Hour			UEQ	URETA		24.16	24.16								
		Manual Order Coordination 2W Unbundled Copper Loop-Non-Designed (per loop)			UEQ	USBMC		9.00	9.00								
		Unbundled Copper Loop-Non-Design, billing for BST providing make-up (Engineering Information-E.I.)			UEQ	UEQMU		13.49	13.49								
		CLEC to CLEC Conversion Charge w/o Outside Dispatch (UCL-ND)			UEQ	UREWO		14.27	7.43								
LOOP MODIFICATION																	
		Unbundled Loop Modification, Removal of Load Coils-2W pair less than or equal to 18k ft, per Unbundled Loop			UAL, UHL, UCL, UEQ, ULS, UEA, UEANL, UEPSR, UEPSB	ULM2L		9.24	9.24								
		Unbundled Loop Modification Removal of Load Coils-4 Wire less than or equal to 18K ft, per Unbundled Loop			UHL, UCL, UEA	ULM4L		9.24	9.24								
		Unbundled Loop Modification Removal of Bridged Tap Removal, per unbundled loop			UAL, UHL, UCL, UEQ, ULS, UEA, UEANL, UEPSR, UEPSB	ULMBT		10.47	10.47								
SUB-LOOPS																	
	Sub-Loop Distribution																
		Sub-Loop-Per Cross Box Location-CLEC Feeder Facility Set-Up			UEANL, UEF	USBSA		207.91	207.91								
		Sub-Loop-Per Cross Box Location-Per 25 Pair Panel Set-Up			UEANL, UEF	USBSB		12.50	12.50								
		Sub-Loop-Per Building Equipment Room-CLEC Feeder Facility Set-Up			UEANL	USBSC		80.87	80.87								
		Sub-Loop-Per Building Equipment Room-Per 25 Pair Panel Set-Up			UEANL	USBSD		45.04	45.04								
		Sub-Loop Distribution Per 2W Analog VG Loop-Zone 1		1	UEANL	USBN2	6.34	85.03	39.05	59.81	7.90						
		Sub-Loop Distribution Per 2W Analog VG Loop-Zone 2		2	UEANL	USBN2	9.06	85.03	39.05	59.81	7.90						
		Sub-Loop Distribution Per 2W Analog VG Loop-Zone 3		3	UEANL	USBN2	14.82	85.03	39.05	59.81	7.90						
		Order Coordination for Unbundled Sub-Loops, per sub-loop pair			UEANL	USBMC		9.00	9.00								
		Sub-Loop Distribution Per 4W Analog VG Loop -Zone 1		1	UEANL	USBN4	8.14	102.31	56.32	65.24	10.88						
		Sub-Loop Distribution Per 4W Analog VG Loop -Zone 2		2	UEANL	USBN4	8.63	102.31	56.32	65.24	10.88						
		Sub-Loop Distribution Per 4W Analog VG Loop -Zone 3		3	UEANL	USBN4	25.60	102.31	56.32	65.24	10.88						
		Order Coordination for Unbundled Sub-Loops, per sub-loop pair			UEANL	USBMC		9.00	9.00								
		Sub-Loop 2W Intrabuilding Network Cable (INC)			UEANL	USBR2	2.57	68.35	22.36	59.81	7.90						
		Order Coordination for Unbundled Sub-Loops, per sub-loop pair			UEANL	USBMC		9.00	9.00								
		Sub-Loop 4W Intrabuilding Network Cable (INC)			UEANL	USBR4	4.98	76.49	30.51	65.24	10.88						
		Order Coordination for Unbundled Sub-Loops, per sub-loop pair			UEANL	USBMC		9.00	9.00								
		Loop Testing-Basic 1st Half Hour			UEANL	URET1		46.88	0.00								
		Loop Testing-Basic Additional Half Hour			UEANL	URETA		24.16	24.16								
		2W Copper Unbundled Sub-Loop Distribution-Zone 1		1	UEF	UCS2X	5.45	85.03	39.05	59.81	7.90						
		2W Copper Unbundled Sub-Loop Distribution-Zone 2		2	UEF	UCS2X	7.06	85.03	39.05	59.81	7.90						
		2W Copper Unbundled Sub-Loop Distribution-Zone 3		3	UEF	UCS2X	9.67	85.03	39.05	59.81	7.90						
		Order Coordination for Unbundled Sub-Loops, per sub-loop pair			UEF	USBMC		9.00	9.00								

UNBUNDLED NETWORK ELEMENTS - Kentucky														Attachment: 2 Exh A			
CATEGORY	RATE ELEMENTS	Interim	Zone	BCS	USOC	RATES($)					Svc Order Submitted Elec per LSR	Svc Order Submitted Manually per LSR	Incremental Charge - Manual Svc Order vs. Electronic-1st	Incremental Charge - Manual Svc Order vs. Electronic-Add'l	Incremental Charge - Manual Svc Order vs. Electronic-Disc 1st	Incremental Charge - Manual Svc Order vs. Electronic-Disc Add'l
							Nonrecurring		NRC Disconnect		OSS Rates($)					
						Rec	First	Add'l	First	Add'l	SOMEC	SOMAN	SOMAN	SOMAN	SOMAN	SOMAN
	4 Wire Copper Unbundled Sub-Loop Distribution-Zone 1		1	UEF	UCS4X	7.09	102.31	56.32	65.24	10.88						
	4 Wire Copper Unbundled Sub-Loop Distribution-Zone 2		2	UEF	UCS4X	8.66	102.31	56.32	65.24	10.88						
	4 Wire Copper Unbundled Sub-Loop Distribution-Zone 3		3	UEF	UCS4X	19.40	102.31	56.32	65.24	10.88						
	Order Coordination for Unbundled Sub-Loops, per sub-loop pair			UEF	USBMC		9.00	9.00								
	Loop Tagging Service Level 1, Unbundled Copper Loop, Non-Designed and Distribution Subloops			UEF, UEANL	URETL		8.93	0.88								
	Loop Testing-Basic 1st Half Hour			UEF	URET1		46.88	0.00								
	Loop Testing-Basic Additional Half Hour			UEF	URETA		24.16	24.16								
Unbundled Sub-Loop Modification																
	Unbundled Sub-Loop Modification-2-W Copper Dist Load Coil/Equip Removal per 2-W PR			UEF	ULM2X		5.23	5.23								
	Unbundled Sub-loop Modification-4-W Copper Dist Load Coil/Equip Removal per 4-W PR			UEF	ULM4X		5.23	5.23								
	Unbundled Loop Modification, Removal of Bridge Tap, per unbundled loop			UEF	ULMBT		7.97	7.97								
Unbundled Network Terminating Wire (UNTW)																
	Unbundled Network Terminating Wire (UNTW) per Pair			UENTW	UENPP	0.53	23.51	23.51								
Network Interface Device (NID)																
	Network Interface Device (NID)-1-2 lines			UENTW	UND12		73.53	49.47								
	Network Interface Device (NID)-1-6 lines			UENTW	UND16		115.96	91.91								
	Network Interface Device Cross Connect-2 W			UENTW	UNDC2		8.56	8.56								
	Network Interface Device Cross Connect-4W			UENTW	UNDC4		8.56	8.56								
UNE OTHER, PROVISIONING ONLY - NO RATE																
	Unbundled Contact Name, Provisioning Only-no rate			UAL, UCL, UDC, UDL, UDN, UEA, UHL, UEANL, UEF, UEQ, UENTW, NTCVG, NTCUD, NTCD1, USL	UNECN	0.00	0.00									
	Unbundled DS1 Loop-Superframe Format Option-no rate			USL, NTCD1	CCOSF	0.00	0.00									
	Unbundled DS1 Loop-Expanded Superframe Format option-no rate			USL, NTCD1	CCOEF	0.00	0.00									
	NID-Dispatch and Service Order for NID installation			UENTW	UNDBX	0.00	0.00									
	UNTW Circuit Establishment, Provisioning Only-No Rate			UENTW	UENCE	0.00	0.00									
LOOP MAKE-UP																
	Loop Makeup-Preordering w/o Reservation, per working or spare facility queried (Manual).			UMK	UMKLW		23.40	23.40								
	Loop Makeup-Preordering With Reservation, per spare facility queried (Manual).			UMK	UMKLP		24.85	24.85								
	Loop Makeup--With or w/o Reservation, per working or spare facility queried (Mechanized)			UMK	UMKMQ		0.67	0.67								
LINE SPLITTING																
END USER ORDERING-CENTRAL OFFICE BASED																
	Line Splitting-per line activation DLEC owned splitter			UEPSR UEPSB	UREOS	0.61										
	Line Splitting-per line activation BST owned-physical			UEPSR UEPSB	UREBP	0.61	37.02	21.20	21.10	9.87						
	Line Splitting-per line activation BST owned-virtual			UEPSR UEPSB	UREBV	0.61	37.02	21.20	21.10	9.87						
UNBUNDLED EXCHANGE ACCESS LOOP																
2-WIRE ANALOG VOICE GRADE LOOP																
	2W Analog VG Loop-Service Level 1-Line Splitting- Zone 1		1	UEPSR UEPSB	UEALS	10.56	46.66	22.57	26.65	7.65						
	2W Analog VG Loop-Service Level 1-Line Splitting- Zone 1		1	UEPSR UEPSB	UEABS	10.56	46.66	22.57	26.65	7.65						
	2W Analog VG Loop- Service Level 1-Line Splitting-Zone 2		2	UEPSR UEPSB	UEALS	15.34	46.66	22.57	26.65	7.65						
	2W Analog VG Loop- Service Level 1-Line Splitting-Zone 2		2	UEPSR UEPSB	UEABS	15.34	46.66	22.57	26.65	7.65						
	2W Analog VG Loop-Service Level 1-Line Splitting-Zone 3		3	UEPSR UEPSB	UEALS	31.11	46.66	22.57	26.65	7.65						
	2W Analog VG Loop-Service Level 1-Line Splitting-Zone 3		3	UEPSR UEPSB	UEABS	31.11	46.66	22.57	26.65	7.65						
PHYSICAL COLLOCATION																
	Physical Collocation-2W Cross Connects (Loop) for Line Splitting			UEPSR UEPSB	PE1LS	0.0333	24.68	23.68	12.14	10.95						
VIRTUAL COLLOCATION																
	Virtual Collocation-2W Cross Connects (Loop) for Line Splitting			UEPSR UEPSB	VE1LS	0.0309	24.68	23.68	12.14	10.95						
UNBUNDLED DEDICATED TRANSPORT																
INTEROFFICE CHANNEL - DEDICATED TRANSPORT																

UNBUNDLED NETWORK ELEMENTS - Kentucky														Attachment: 2 Exh A			
CATEGORY		RATE ELEMENTS	Interim	Zone	BCS	USOC	RATES($)					Svc Order Submitted Elec per LSR	Svc Order Submitted Manually per LSR	Incremental Charge - Manual Svc Order vs. Electronic-1st	Incremental Charge - Manual Svc Order vs. Electronic-Add'l	Incremental Charge - Manual Svc Order vs. Electronic-Disc 1st	Incremental Charge - Manual Svc Order vs. Electronic-Disc Add'l
								Nonrecurring		NRC Disconnect		OSS Rates($)					
							Rec	First	Add'l	First	Add'l	SOMEC	SOMAN	SOMAN	SOMAN	SOMAN	SOMAN
		Interoffice Channel-2W VG-per mile			U1TVX	1L5XX	0.01										
		Interoffice Channel-2W VG-Facility Termination			U1TVX	U1TV2	29.11	47.34	31.78	22.77	8.75						
		Interoffice Channel-2W VG Rev Bat.-per mile			U1TVX	1L5XX	0.01										
		Interoffice Channel-2W VG Rev Bat.-Facility Termination			U1TVX	U1TR2	29.11	47.34	31.78	22.77	8.75						
		Interoffice Channel-4W VG-per mile			U1TVX	1L5XX	0.01										
		Interoffice Channel-4- Wire VG-Facility Termination			U1TVX	U1TV4	25.86	47.34	31.78	22.77	8.75						
		Interoffice Channel-56 kbps-per mile			U1TDX	1L5XX	0.0115										
		Interoffice Channel-56 kbps-Facility Termination			U1TDX	U1TD5	20.97	47.34	31.78	22.77	8.75						
		Interoffice Channel-64 kbps-per mile			U1TDX	1L5XX	0.0115										
		Interoffice Channel-64 kbps-Facility Termination			U1TDX	U1TD6	20.97	47.34	31.78	22.77	8.75						
		Interoffice Channel-DS1-per mile			U1TD1	1L5XX	0.23										
		Interoffice Channel-DS1-Facility Termination			U1TD1	U1TF1	96.04	105.52	98.46	23.09	20.49						
		Interoffice Channel-DS3-per mile			U1TD3	1L5XX	4.97										
		Interoffice Channel-DS3-Facility Termination			U1TD3	U1TF3	1,175.15	335.40	219.24	89.57	87.75						
		Interoffice Channel-STS-1-per mile			U1TS1	1L5XX	4.97										
		Interoffice Channel-STS-1-Facility Termination			U1TS1	U1TFS	1,149.51	335.40	219.24	89.57	87.75						
		Local Channel-Dedicated-2W VG			ULDVX, UNCVX	ULDV2	21.36										
		Local Channel-Dedicated-2W VG Rev Bat			ULDVX	ULDR2	21.36										
		Local Channel-Dedicated-4W VG			ULDVX, UNCVX	ULDV4	22.84										
		Local Channel-Dedicated-DS1-Zone 1		1	ULDD1, UNC1X	ULDF1	46.53										
		Local Channel-Dedicated-DS1 -Zone 2		2	ULDD1, UNC1X	ULDF1	49.90										
		Local Channel-Dedicated-DS1 -Zone 3		3	ULDD1, UNC1X	ULDF1	189.18										
		Local Channel-Dedicated-DS3-Per Mile per month			ULDD3, UNC3X	1L5NC	10.05										
		Local Channel-Dedicated-DS3-Facility Termination			ULDD3, UNC3X	ULDF3	662.46										
		Local Channel-Dedicated-STS-1- Per Mile per month			ULDS1, UNCSX	1L5NC	10.05										
		Local Channel-Dedicated-STS-1 -Facility Termination			ULDS1, UNCSX	ULDFS	624.73										
	UNBUNDLED DARK FIBER																
		Dark Fiber-Interoffice Transport, Per Four Fiber Strands, Per Route Mile Or Fraction Thereof			UDF, UDFCX	1L5DF	30.74										
		Dark Fiber-Interoffice Transport, Per Four Fiber Strands, Per Route Mile Or Fraction Thereof			UDF, UDFCX	UDF14		732.53	192.67	377.27	241.67						
DARK FIBER																	
		Dark Fiber, Four Fiber Strands, Per Route Mile or Fraction Thereof per month-Local Channel			UDF, UDFCX	1L5DC	54.06										
		Dark Fiber, Four Fiber Strands, Per Route Mile or Fraction Thereof per month-Local Loop			UDF, UDFCX	1L5DL	54.06										
8XX ACCESS TEN DIGIT SCREENING																	
		8XX Access Ten Digit Screening, Per Call					0.0006478										
		8XX Access Ten Digit Screening w/ 8FL No. Delivery,					0.0006478										
		8XX Access Ten Digit Screening, w/ POTS No. Delivery,					0.0006478										
LINE INFORMATION DATA BASE ACCESS (LIDB)																	
		LIDB Common Transport Per Query					0.000023										
		LIDB Validation Per Query					0.0137322										
		LIDB Originating Point Code Establishment or Change			OQU	NRBPX		55.12		67.59							
CALLING NAME (CNAM) SERVICE																	
		CNAM for DB Owners, Per Query					0.0010348										
		CNAM for Non DB Owners, Per Query					0.0010348										
SELECTIVE ROUTING																	
		Selective Routing Per Unique Line Class Code Per Request Per Switch						93.53	93.53	15.58	15.58						
AIN SELECTIVE CARRIER ROUTING																	
		Regional Service Establishment						193,401.00	193,401.00	9,483.34	9,483.34						
		End Office Establishment						194.09	194.09	0.85	0.85						
		Line/Port NRC, per end user						2.06	2.06								
		Query NRC, per query					0.0037502										
AIN - BELLSOUTH AIN SMS ACCESS SERVICE																	
		AIN SMS Access Service-Service Establishment, Per State, Initial Setup			A1N	CAMSE		43.55	43.55	44.93	44.93						
		AIN SMS Access Service-Port Connection-Dial/Shared Access			A1N	CAMDP		8.64	8.64	10.03	10.03						

UNBUNDLED NETWORK ELEMENTS - Kentucky														Attachment: 2 Exh A			
CATEGORY	RATE ELEMENTS	Interim	Zone	BCS	USOC	RATES($)					Svc Order Submitted Elec per LSR	Svc Order Submitted Manually per LSR	Incremental Charge - Manual Svc Order vs. Electronic-1st	Incremental Charge - Manual Svc Order vs. Electronic-Add'l	Incremental Charge - Manual Svc Order vs. Electronic-Disc 1st	Incremental Charge - Manual Svc Order vs. Electronic-Disc Add'l
							Nonrecurring		NRC Disconnect		OSS Rates($)					
						Rec	First	Add'l	First	Add'l	SOMEC	SOMAN	SOMAN	SOMAN	SOMAN	SOMAN
	AIN SMS Access Service-Port Connection-ISDN Access			A1N	CAM1P		8.64	8.64	10.03	10.03						
	AIN SMS Access Service-User Identification Codes-Per User ID Code			A1N	CAMAU		38.65	38.65	29.88	29.88						
	AIN SMS Access Service-Security Card, Per User ID Code, Initial or Replacement			A1N	CAMRC		75.08	75.08	12.93	12.93						
	AIN SMS Access Service-Storage, Per Unit (100 Kilobytes)					0.0025										
	AIN SMS Access Service-Session, Per Minute					0.666										
	AIN SMS Access Service-Company Performed Session, Per Minute					0.4608										
HIGH CAPACITY UNBUNDLED LOCAL LOOP																
DS-3/STS-1 UNBUNDLED LOCAL LOOP - Stand Alone																
	DS3 Unbundled Local Loop-per mile			UE3	1L5ND	9.25										
	DS3 Unbundled Local Loop-Facility Termination			UE3	UE3PX	308.31	551.38	338.08	173.00	120.42						
	STS-1Unbundled Local Loop-per mile			UDLSX	1L5ND	9.25										
	STS-1 Unbundled Local Loop-Facility Termination			UDLSX	UDLS1	320.51	551.38	338.08	173.00	120.42						
ENHANCED EXTENDED LINK (EELs)																
Network Elements Used in Combinations																
	2W VG Loop (SL2) in Combination-Zone 1		1	UNCVX	UEAL2	12.67	125.22	60.48	59.69	7.84						
	2W VG Loop (SL2) in Combination-Zone 2		2	UNCVX	UEAL2	17.45	125.22	60.48	59.69	7.84						
	2W VG Loop (SL2) in Combination-Zone 3		3	UNCVX	UEAL2	33.22	125.22	60.48	59.69	7.84						
	4W Analog VG Loop in Combination -Zone 1		1	UNCVX	UEAL4	29.26	125.22	60.48	59.69	7.84						
	4W Analog VG Loop in Combination -Zone 2		2	UNCVX	UEAL4	34.25	125.22	60.48	59.69	7.84						
	4W Analog VG Loop in Combination -Zone 3		3	UNCVX	UEAL4	85.06	125.22	60.48	59.69	7.84						
	2W ISDN Loop in Combination-Zone 1		1	UNCNX	U1L2X	18.44	125.22	60.48	59.69	7.84						
	2W ISDN Loop in Combination-Zone 2		2	UNCNX	U1L2X	25.08	125.22	60.48	59.69	7.84						
	2W ISDN Loop in Combination-Zone 3		3	UNCNX	U1L2X	42.87	125.22	60.48	59.69	7.84						
	4W 56Kbps Digital Grade Loop in Combination-Zone 1		1	UNCDX	UDL56	27.59	125.22	60.48	59.69	7.84						
	4W 56Kbps Digital Grade Loop in Combination-Zone 2		2	UNCDX	UDL56	32.48	125.22	60.48	59.69	7.84						
	4W 56Kbps Digital Grade Loop in Combination-Zone 3		3	UNCDX	UDL56	36.37	125.22	60.48	59.69	7.84						
	4W 64Kbps Digital Grade Loop in Combination-Zone 1		1	UNCDX	UDL64	27.59	125.22	60.48	59.69	7.84						
	4W 64Kbps Digital Grade Loop in Combination-Zone 2		2	UNCDX	UDL64	32.48	125.22	60.48	59.69	7.84						
	4W 64Kbps Digital Grade Loop in Combination-Zone 3		3	UNCDX	UDL64	36.37	125.22	60.48	59.69	7.84						
	4W DS1 Digital Loop in Combination-Zone 1		1	UNC1X	USLXX	86.47	210.70	114.60	63.96	17.97						
	4W DS1 Digital Loop in Combination-Zone 2		2	UNC1X	USLXX	114.10	210.70	114.60	63.96	17.97						
	4W DS1 Digital Loop in Combination-Zone 3		3	UNC1X	USLXX	297.76	210.70	114.60	63.96	17.97						
	DS3 Local Loop in combination-per mile			UNC3X	1L5ND	9.25										
	DS3 Local Loop in combination-Facility Termination			UNC3X	UE3PX	308.31	237.36	147.69	83.43	32.67						
	STS-1 Local Loop in combination-per mile			UNCSX	1L5ND	9.25										
	STS-1 Local Loop in combination-Facility Termination			UNCSX	UDLS1	320.51	237.36	147.69	83.43	32.67						
	Interoffice Channel in combination-2W VG-per mile			UNCVX	1L5XX	0.01										
	Interoffice Channel in combination-2W VG-Facility Termination			UNCVX	U1TV2	23.95	98.09	53.67	56.31	22.42						
	Interoffice Channel in combination-4W VG-per mile			UNCVX	1L5XX	0.01										
	Interoffice Channel in combination-4W VG-Facility Termination			UNCVX	U1TV4	21.28	98.09	53.67	56.31	22.42						
	Interoffice Channel in combination-4W 56 kbps-per mile			UNCDX	1L5XX	0.01										
	Interoffice Channel in combination-4W 56 kbps-Facility Termination			UNCDX	U1TD5	17.25	98.09	53.67	56.31	22.42						
	Interoffice Channel in combination-4W 64 kbps-per mile			UNCDX	1L5XX	0.01										
	Interoffice Channel in combination-4W 64 kbps-Facility Termination			UNCDX	U1TD6	17.25	98.09	53.67	56.31	22.42						
	Interoffice Channel in combination-DS1-per mile			UNC1X	1L5XX	0.19										
	Interoffice Channel in combination-DS1 Facility Termination			UNC1X	U1TF1	79.02	181.24	123.53	56.72	22.32						
	Interoffice Channel in combination-DS3-per mile			UNC3X	1L5XX	4.09										
	Interoffice Channel in combination-DS3-Facility Termination			UNC3X	U1TF3	966.89	350.56	141.58	48.00	23.39						
	Interoffice Channel in combination-STS-1-per mile			UNCSX	1L5XX	4.09										
	Interoffice Channel in combination-STS-1 Facility Termination			UNCSX	U1TFS	945.79	350.56	141.58	48.00	23.39						
ADDITIONAL NETWORK ELEMENTS																
Optional Features & Functions:																
	Clear Channel Capability Extended Frame Option-per DS1	I		U1TD1, ULDD1,UNC1X	CCOEF		0.00	0.00	0.00	0.00						
	Clear Channel Capability Super FrameOption-per DS1	I		U1TD1, ULDD1,UNC1X	CCOSF		0.00	0.00	0.00	0.00						
	Clear Channel Capability (SF/ESF) Option-Subsequent Activity-per DS1	I		ULDD1, U1TD1, UNC1X, USL	NRCCC		184.91	23.82	1.99	0.78						

UNBUNDLED NETWORK ELEMENTS - Kentucky														Attachment: 2 Exh A			
CATEGORY		RATE ELEMENTS	Interim	Zone	BCS	USOC	RATES($)					Svc Order Submitted Elec per LSR	Svc Order Submitted Manually per LSR	Incremental Charge - Manual Svc Order vs. Electronic-1st	Incremental Charge - Manual Svc Order vs. Electronic-Add'l	Incremental Charge - Manual Svc Order vs. Electronic-Disc 1st	Incremental Charge - Manual Svc Order vs. Electronic-Disc Add'l
								Nonrecurring		NRC Disconnect		OSS Rates($)					
							Rec	First	Add'l	First	Add'l	SOMEC	SOMAN	SOMAN	SOMAN	SOMAN	SOMAN
		C-bit Parity Option-Subsequent Activity-per DS3	i		U1TD3, ULDD3, UE3, UNC3X	NRCC3		205.70	7.20	0.6924	0.00						
		DS1/DS0 Channel System			UNC1X	MQ1	113.33	57.26	14.74	1.86	1.67						
		DS3/DS1Channel System			UNC3X, UNCSX	MQ3	158.20	115.48	56.53	15.12	5.30						
		VG COCI in combination			UNCVX	1D1VG	0.6228	6.71	4.84								
		VG COCI-for Stand Alone Local Loop			UEA	1D1VG	0.6228	6.71	4.84								
		VG COCI-for connection to a channelized DS1 Local Channel in the same SWC as collocation			U1TUC	1D1VG	0.6228	6.71	4.84								
		OCU-DP COCI (2.4-64kbs) in combination			UNCDX	1D1DD	1.32	6.71	4.84								
		OCU-DP COCI (2.4-64kbs)-for Stand Alone Local Loop			UDL	1D1DD	1.32	6.71	4.84								
		OCU-DP COCI (2.4-64kbs)-for connection to a channelized DS1 Local Channel in the same SWC as collocation			U1TUD	1D1DD	1.32	6.71	4.84								
		2W ISDN COCI (BRITE) in combination			UNCNX	UC1CA	2.84	6.71	4.84								
		2W ISDN COCI (BRITE)-for a Local Loop			UDN	UC1CA	2.84	6.71	4.84								
		2W ISDN COCI (BRITE)-for connection to a channelized DS1 Local Channel in the same SWC as collocation			U1TUB	UC1CA	2.84	6.71	4.84								
		DS1 COCI in combination			UNC1X	UC1D1	11.80	6.71	4.84								
		DS1 COCI-for Stand Alone Local Channel			ULDD1	UC1D1	11.80	6.71	4.84								
		DS1 COCI-for Stand Alone Interoffice Channel			U1TD1	UC1D1	11.80	6.71	4.84								
		DS1 COCI-for Stand Alone Local Loop			USL	UC1D1	11.80	6.71	4.84								
		DS1 COCI-for connection to a channelized DS1 Local Channel in the same SWC as collocation			U1TUA	UC1D1	11.80	6.71	4.84								
		Wholesale to UNE, Switch-As-Is Conversion Charge			UNCVX, U1TVX, UNCDX, U1TDX, UNC1X, U1TD1,UNC3X, U1TD3, UNCSX, U1TS1, UDF,UDFCX	UNCCC		8.98	8.98								
		Unbundled Misc Rate Element, SNE SAI, Single Network Element-Switch As Is Non-recurring Charge, per circuit (LSR)	i		U1TVX, U1TDX, U1TD1, U1TD3, U1TS1, UDF, UE3	URESL		36.80	16.10								
		Unbundled Misc Rate Element, SNE SAI, Single Network Element-Switch As Is Non-recurring Charge, incremental charge per circuit on a spreadsheet	i		U1TVX, U1TDX, U1TD1, U1TD3, U1TS1, UDF, UE3	URESP		1.49	1.49								
		UNE Reconfiguration Change Charge per Circuit	I		UNC1X	URERC		35.00	35.00								
		UNE Reconfiguration Change Charge per Circuit Project Managed	I		UNC1X	URERP		1.49	1.49								
	Access to DCS - Customer Reconfiguration (FlexServ)																
		Customer Reconfiguration Establishment						1.63		2.03							
		DS1 DCS Termination with DS0 Switching					25.69	32.88	23.58	21.09	15.88						
		DS1 DCS Termination with DS1 Switching					12.41	25.07	15.76	16.23	11.02						
		DS3 DCS Termination with DS1 Switching					154.20	32.88	23.58	21.09	15.88						
	Service Rearrangements																
		NRC-Change in Facility Assignment per circuit Service Rearrangement	I		U1TVX, U1TDX, UEA, UDL, U1TUC, U1TUD, U1TUB, ULDVX, ULDDX, UNCVX, UNCDX, UNC1X	URETD		101.09	43.04								
		NRC-Change in Facility Assignment per circuit Project Management (added to CFA per circuit if project managed)	I		U1TVX, U1TDX, UEA, UDL, U1TUC, U1TUD, U1TUB, ULDVX, ULDDX, UNCVX, UNCDX, UNC1X	URETB		1.28	1.28								
		NRC-Order Coordination Specific Time-Dedicated Transport	I		UNC1X	OCOSR		18.87	18.87								
COMMINGLING																	

CATEGORY	RATE ELEMENTS	Interim	Zone	BCS	USOC	RATES($)					Svc Order Submitted Elec per LSR	Svc Order Submitted Manually per LSR	Incremental Charge - Manual Svc Order vs. Electronic-1st	Incremental Charge - Manual Svc Order vs. Electronic-Add'l	Incremental Charge - Manual Svc Order vs. Electronic-Disc 1st	Incremental Charge - Manual Svc Order vs. Electronic-Disc Add'l
							Nonrecurring		NRC Disconnect		OSS Rates($)					
						Rec	First	Add'l	First	Add'l	SOMEC	SOMAN	SOMAN	SOMAN	SOMAN	SOMAN
	Commingling Authorization			UNCVX, UNCDX, UNC1X, UNC3X, UNCSX, U1TD1, U1TD3, U1TS1, UE3, UDLSX, U1TVX, U1TDX, U1TUB, ULDVX, ULDD1, ULDD3, ULDS1	CMGAU	0.00	0.00	0.00	0.00	0.00						
Commingled (UNE part of single bandwidth circuit)																
	Commingled VG COCI			XDV2X, NTCVG	1D1VG	0.6228	6.71	4.84								
	Commingled Digital COCI			XDV6X, NTCUD	1D1DD	1.32	6.71	4.84								
	Commingled ISDN COCI			XDD4X	UC1CA	2.84	6.71	4.84								
	Commingled 2W VG Interoffice Channel			XDV2X	U1TV2	23.95	98.09	53.67	56.31	22.42						
	Commingled 4W VG Interoffice Channel			XDV6X	U1TV4	21.28	98.09	53.67	56.31	22.42						
	Commingled 56kbps Interoffice Channel			XDD4X	U1TD5	20.97	98.09	53.67	56.31	22.42						
	Commingled 64kbps Interoffice Channel			XDD4X	U1TD6	17.25	98.09	53.67	56.31	22.42						
	Commingled VG/DS0 Interoffice Channel Mileage			XDV2X, XDV6X, XDD4X	1L5XX	0.01										
	Commingled 2W Local Loop Zone 1		1	XDV2X	UEAL2	12.67	125.22	60.48	59.69	7.84						
	Commingled 2W Local Loop Zone 2		2	XDV2X	UEAL2	17.45	125.22	60.48	59.69	7.84						
	Commingled 2W Local Loop Zone 3		3	XDV2X	UEAL2	33.22	125.22	60.48	59.69	7.84						
	Commingled 4W Local Loop Zone 1		1	XDV6X	UEAL4	29.26	125.22	60.48	59.69	7.84						
	Commingled 4W Local Loop Zone 2		2	XDV6X	UEAL4	34.25	125.22	60.48	59.69	7.84						
	Commingled 4W Local Loop Zone 3		3	XDV6X	UEAL4	85.06	125.22	60.48	59.69	7.84						
	Commingled 56kbps Local Loop Zone 1		1	XDD4X	UDL56	27.59	125.22	60.48	59.69	7.84						
	Commingled 56kbps Local Loop Zone 2		2	XDD4X	UDL56	32.48	125.22	60.48	59.69	7.84						
	Commingled 56kbps Local Loop Zone 3		3	XDD4X	UDL56	36.37	125.22	60.48	59.69	7.84						
	Commingled 64kbps Local Loop Zone 1		1	XDD4X	UDL64	27.59	125.22	60.48	59.69	7.84						
	Commingled 64kbps Local Loop Zone 2		2	XDD4X	UDL64	32.48	125.22	60.48	59.69	7.84						
	Commingled 64kbps Local Loop Zone 3		3	XDD4X	UDL64	36.37	125.22	60.48	59.69	7.84						
	Commingled ISDN Local Loop Zone 1		1	XDD4X	U1L2X	18.44	125.22	60.48	59.69	7.84						
	Commingled ISDN Local Loop Zone 2		2	XDD4X	U1L2X	25.08	125.22	60.48	59.69	7.84						
	Commingled ISDN Local Loop Zone 3		3	XDD4X	U1L2X	42.87	125.22	60.48	59.69	7.84						
	Commingled DS1 COCI			XDH1X, NTCD1	UC1D1	11.80	6.71	4.84								
	Commingled DS1 Interoffice Channel			XDH1X	U1TF1	79.02	181.24	123.53	56.72	22.32						
	Commingled DS1 Interoffice Channel Mileage			XDH1X	1L5XX	0.19										
	Commingled DS1/DS0 Channel System			XDH1X	MQ1	113.33	57.26	14.74	1.86	1.67						
	Commingled DS1 Local Loop Zone 1		1	XDH1X	USLXX	86.47	86.47	86.47	86.47	86.47						
	Commingled DS1 Local Loop Zone 2		2	XDH1X	USLXX	114.10	114.10	114.10	114.10	114.10						
	Commingled DS1 Local Loop Zone 3		3	XDH1X	USLXX	297.76	297.76	297.76	297.76	297.76						
	Commingled DS3 Local Loop			HFQC6	UE3PX	308.31										
	Commingled DS3/STS-1 Local Loop Mileage			HFQC6, HFRST	1L5ND	9.25										
	Commingled STS-1 Local Loop			HFRST	UDLS1	320.51	237.36	147.69	83.43	32.67						
	Commingled DS3/DS1 Channel System			HFQC6	MQ3	158.20	115.48	56.53	15.12	5.30						
	Commingled DS3 Interoffice Channel			HFQC6	U1TF3	966.89	350.56	141.58	48.00	23.39						
	Commingled DS3 Interoffice Channel Mileage			HFQC6	1L5XX	4.09										
	Commingled STS-1Interoffice Channel			HFRST	U1TFS	945.79	350.56	141.58	48.00	23.39						
	Commingled STS-1Interoffice Channel Mileage			HFRST	1L5XX	4.09										
	Commingled Dark Fiber-Interoffice Transport, Per Four Fiber Strands, Per Route Mile Or Fraction Thereof			HEQDL	1L5DF	30.74										
	Commingled Dark Fiber-Interoffice Transport, Per Four Fiber Strands, Per Route Mile Or Fraction Thereof			HEQDL	UDF14		732.53	192.67	377.27	241.67						
SIGNALING (CCS7)																
NOTE:"bk" beside a rate indicates that the parties have agreed to bill and keep for that element pursuant to the terms and conditions in Attachment 3.																
	CCS7 Signaling Usage, Per TCAP Message					0.0000656bk										
	CCS7 Signaling Usage, Per ISUP Message					0.0000164bk										
LNP Query Service																
	LNP Charge Per query					0.0008695										

UNBUNDLED NETWORK ELEMENTS - Kentucky														Attachment: 2 Exh A			
CATEGORY	RATE ELEMENTS	Interim	Zone	BCS	USOC	RATES($)					Svc Order Submitted Elec per LSR	Svc Order Submitted Manually per LSR	Incremental Charge - Manual Svc Order vs. Electronic-1st	Incremental Charge - Manual Svc Order vs. Electronic-Add'l	Incremental Charge - Manual Svc Order vs. Electronic-Disc 1st	Incremental Charge - Manual Svc Order vs. Electronic-Disc Add'l
							Nonrecurring		NRC Disconnect		OSS Rates($)					
						Rec	First	Add'l	First	Add'l	SOMEC	SOMAN	SOMAN	SOMAN	SOMAN	SOMAN
	LNP Service Establishment Manual						13.82	13.82	12.71	12.71						
	LNP Service Provisioning with Point Code Establishment						953.27	487.00	431.95	317.61						
911 PBX LOCATE																
911 PBX LOCATE DATABASE CAPABILITY																
	Service Establishment per CLEC per End User Account			9PBDC	9PBEU		1,814.00									
	Changes to TN Range or Customer Profile			9PBDC	9PBTN		181.57									
	Per Telephone Number (Monthly)			9PBDC	9PBMM	0.07										
	Change Company (Service Provider) ID			9PBDC	9PBPC		533.00									
	PBX Locate Service Support per CLEC (Monthlt)			9PBDC	9PBMR	179.88										
	Service Order Charge			9PBDC	9PBSC		7.86									
911 PBX LOCATE TRANSPORT COMPONENT																
See Att 3																
Note: Rates displaying an "I" in Interim column are interim as a result of a Commission order.																
UNBUNDLED LOCAL EXCHANGE SWITCHING(PORTS)																
The Exchange Switching Port Rates Reflected Here Apply to Embedded Base Switching Ports as of March 10, 2005 and Consist of the TELRIC Cost Based Rates Plus $1.00 in Accordance with the TRRO.																
Exchange Ports																
NOTE: Although the Port Rate includes all available features in GA, KY, LA & TN, the desired features will need to be ordered using retail USOCs																
2-WIRE VOICE GRADE LINE PORT RATES (RES)																
	Exchange Ports-2W Analog Line Port- Res.			UEPSR	UEPRL	2.49	3.74	3.63	2.23	2.13						
	Exchange Ports-2W Analog Line Port with Caller ID-Res.			UEPSR	UEPRC	2.49	3.74	3.63	2.23	2.13						
	Exchange Ports-2W Analog Line Port outgoing only-Res.			UEPSR	UEPRO	2.49	3.74	3.63	2.23	2.13						
	Exchange Ports-2W VG unbundled KY extended local dialing parity Port with Caller ID-Res.			UEPSR	UEPRM	2.49	3.74	3.63	2.23	2.13						
	Exchange Ports-2W VG unbundled res, low usage line port with Caller ID (LUM)			UEPSR	UEPAP	2.49	3.74	3.63	2.23	2.13						
	Exchange Ports-2W Voice KY Residence Dialing Plan w/o Caller ID			UEPSR	UEPWE	2.49	3.74	3.63	2.23	2.13						
	2W voice unbundled Low Usage Line Port w/o Caller ID Capability			UEPSR	UEPRT	2.49	3.74	3.63	2.23	2.13						
	Subsequent Activity			UEPSR	USASC	0.00	0.00	0.00								
FEATURES																
	All Available Vertical Features			UEPSR	UEPVF	0.00	0.00	0.00								
2-WIRE VOICE GRADE LINE PORT RATES (BUS)																
	Exchange Ports-2W Analog Line Port w/o Caller ID-Bus			UEPSB	UEPBL	2.49	3.74	3.63	2.23	2.13						
	Exchange Ports-2W VG unbundled Line Port with unbundled port with Caller+E484 ID-Bus.			UEPSB	UEPBC	2.49	3.74	3.63	2.23	2.13						
	Exchange Ports-2W Analog Line Port outgoing only-Bus.			UEPSB	UEPBO	2.49	3.74	3.63	2.23	2.13						
	Exchange Ports-2W VG unbundled KY extended local dialing parity Port with Caller ID-Bus.			UEPSB	UEPBM	2.49	3.74	3.63	2.23	2.13						
	Exhange Ports-2W VG unbundled incoming only port with Caller ID-Bus			UEPSB	UEPB1	2.49	3.74	3.63	2.23	2.13						
	Exchange Ports-2W Voice KY Business Dialing Plan w/o Caller ID			UEPSB	UEPWF	2.49	3.74	3.63	2.23	2.13						
	2W voice unbundled Incoming Only Port w/o Caller ID Capability			UEPSB	UEPBE	2.49	3.74	3.63	2.23	2.13						
	Subsequent Activity			UEPSB	USASC	0.00	0.00	0.00								
FEATURES																
	All Available Vertical Features			UEPSB	UEPVF	0.00	0.00	0.00								
EXCHANGE PORT RATES (DID & PBX)																
	2W VG Unbundled 2-Way PBX Trunk-Res			UEPSE	UEPRD	2.49	39.05	18.17	15.38	0.89						
	2W VG Line Side Unbundled 2-Way PBX Trunk-Bus			UEPSP	UEPPC	2.49	39.05	18.17	15.38	0.89						
	2W VG Line Side Unbundled Outward PBX Trunk-Bus			UEPSP	UEPPO	2.49	39.05	18.17	15.38	0.89						
	2W VG Line Side Unbundled Incoming PBX Trunk-Bus			UEPSP	UEPP1	2.49	39.05	18.17	15.38	0.89						
	2W Analog Long Distance Terminal PBX Trunk-Bus			UEPSP	UEPLD	2.49	39.05	18.17	15.38	0.89						
	2W Voice Unbundled PBX LD Terminal Ports			UEPSP	UEPLD	2.49	39.05	18.17	15.38	0.89						
	2W Vice Unbundled 2-Way PBX Usage Port			UEPSP	UEPXA	2.49	39.05	18.17	15.38	0.89						
	2W Voice Unbundled PBX Toll Terminal Hotel Ports			UEPSP	UEPXB	2.49	39.05	18.17	15.38	0.89						
	2W Voice Unbundled PBX LD DDD Terminals Port			UEPSP	UEPXC	2.49	39.05	18.17	15.38	0.89						
	2W Voice Unbundled PBX LD Terminal Switchboard Port			UEPSP	UEPXD	2.49	39.05	18.17	15.38	0.89						
	2W Voice Unbundled PBX LD Terminal Switchboard IDD Capable Port			UEPSP	UEPXE	2.49	39.05	18.17	15.38	0.89						
	2W Voice Unbundled 2-Way PBX KY Rm Area Calling Port w/o LUD			UEPSP	UEPXF	2.49	39.05	18.17	15.38	0.89						
	2W Voice Unbundled PBX KY LUD Area Calling Port			UEPSP	UEPXG	2.49	39.05	18.17	15.38	0.89						

UNBUNDLED NETWORK ELEMENTS - Kentucky														Attachment: 2 Exh A			
CATEGORY	RATE ELEMENTS	Interim	Zone	BCS	USOC	RATES($)					Svc Order Submitted Elec per LSR	Svc Order Submitted Manually per LSR	Incremental Charge - Manual Svc Order vs. Electronic-1st	Incremental Charge - Manual Svc Order vs. Electronic-Add'l	Incremental Charge - Manual Svc Order vs. Electronic-Disc 1st	Incremental Charge - Manual Svc Order vs. Electronic-Disc Add'l
							Nonrecurring		NRC Disconnect		OSS Rates($)					
						Rec	First	Add'l	First	Add'l	SOMEC	SOMAN	SOMAN	SOMAN	SOMAN	SOMAN
	2W Voice Unbundled PBX KY Premium Callling Port			UEPSP	UEPXH	2.49	39.05	18.17	15.38	0.89						
	2W Voice Unbundled 2-Way PBX KY Area Callling Port w/o LUD			UEPSP	UEPXJ	2.49	39.05	18.17	15.38	0.89						
	2W Voice Unbundled 2-Way PBX Hotel/Hospital Economy Administrative Calling Port			UEPSP	UEPXL	2.49	39.05	18.17	15.38	0.89						
	2W Voice Unbundled 2-Way PBX Hotel/Hospital Economy Rm Calling Port			UEPSP	UEPXM	2.49	39.05	18.17	15.38	0.89						
	2W Voice Unbundled 1-Way Outgoing PBX Hotel/Hospital Discount Rm Calling Port			UEPSP	UEPXO	2.49	39.05	18.17	15.38	0.89						
	2W Voice Unbundled 1-Way Outgoing PBX Measured Port			UEPSP	UEPXS	2.49	39.05	18.17	15.38	0.89						
	Subsequent Activity			UEPSP	USASC	0.00	0.00	0.00								
FEATURES																
	All Available Vertical Features			UEPSP UEPSE	UEPVF	0.00	0.00	0.00								
Local Switching Features offered with Port																
NOTE: Transmission/usage charges associated with POTS circuit switched usage will also apply to circuit switched voice and/or circuit switched data transmission by B-Channels associated with 2-wire ISDN ports.																
NOTE: Access to B Channel or D Channel Packet capabilities will be available only through BFR/New Business Request Process. Rates for the packet capabilities will be determined via the Bona Fide Request/New Business Request Process.																
2-WIRE VOICE GRADE LINE PORT RATES (DID)																
	Exchange Ports-2W DID Port			UEPEX	UEPP2	11.51	92.18	15.82	52.16	5.30						
2-WIRE VOICE GRADE LINE PORT RATES (ISDN-BRI)																
	Exchange Ports-2W ISDN Port (See Notes below.)			UEPTX, UEPSX	U1PMA	14.46	60.60	50.67	32.83	14.17						
	All Features Offered			UEPTX, UEPSX	UEPVF	0.00	0.00	0.00								
	Exchange Ports-2W ISDN Port -- Channel Profiles			UEPTX, UEPSX	U1UMA	0.00	0.00	0.00								
NOTE: Transmission/usage charges associated with POTS circuit switched usage will also apply to circuit switched voice and/or circuit switched data transmission by B-Channels associated with 2-wire ISDN ports.																
NOTE: Access to B Channel or D Channel Packet capabilities will be available only through BFR/New Business Request Process. Rates for the packet capabilities will be determined via the Bona Fide Request/New Business Request Process.																
UNBUNDLED PORT with REMOTE CALL FORWARDING CAPABILITY																
UNBUNDLED REMOTE CALL FORWARDING SERVICE - RESIDENCE																
	Unbundled Remote Call Forwarding Service, Area Calling, Res			UEPVR	UERAC	2.49	3.74	3.63								
	Unbundled Remote Call Forwarding Service, Local Calling-Res			UEPVR	UERLC	2.49	3.74	3.63								
	Unbundled Remote Call Forwarding Service, InterLATA-Res			UEPVR	UERTE	2.49	3.74	3.63								
	Unbundled Remote Call Forwarding Service, IntraLATA-Res			UEPVR	UERTR	2.49	3.74	3.63								
Non-Recurring																
	Unbundled Remote Call Forwarding Service -Conversion-Switch-as-is			UEPVR	USAC2		0.10	0.10								
	Unbundled Remote Call Forwarding Service -Conversion with allowed change (PIC and LPIC)			UEPVR	USACC		0.10	0.10								
UNBUNDLED REMOTE CALL FORWARDING - Bus																
	Unbundled Remote Call Forwarding Service, Area Calling-Bus			UEPVB	UERAC	2.49	3.74	3.63								
	Unbundled Remote Call Forwarding Service, Local Calling-Bus			UEPVB	UERLC	2.49	3.74	3.63								
	Unbundled Remote Call Forwarding Service, InterLATA-Bus			UEPVB	UERTE	2.49	3.74	3.63								
	Unbundled Remote Call Forwarding Service, IntraLATA-Bus			UEPVB	UERTR	2.49	3.74	3.63								
	Unbundled Remote Call Forwarding Service Expanded and Exception Local Calling			UEPVB	UERVJ	2.49	3.74	3.63								
Non-Recurring																
	Unbundled Remote Call Forwarding Service-Conversion-Switch-as-is			UEPVB	USAC2		0.10	0.10								
	Unbundled Remote Call Forwarding Service -Conversion with allowed change (PIC and LPIC)			UEPVB	USACC		0.10	0.10								
UNBUNDLED LOCAL SWITCHING, PORT USAGE																
End Office Switching (Port Usage)																
	End Office Switching Function, Per MOU					0.0011971										
	End Office Trunk Port-Shared, Per MOU					0.0002112										
Tandem Switching (Port Usage) (Local or Access Tandem)																
	Tandem Switching Function Per MOU					0.000194										
	Tandem Trunk Port-Shared, Per MOU					0.0002416										
	Tandem Switching Function Per MOU (Melded)					0.000094381										
	Tandem Trunk Port-Shared, Per MOU (Melded)					.000117538										
Melded Factor: 48.65% of the Tandem Rate																
Common Transport																
	Common Transport-Per Mile, Per MOU					0.000003										
	Common Transport-Facilities Termination Per MOU					0.0007466										
UNBUNDLED PORT/LOOP COMBINATIONS - COST BASED RATES																
>Cost Based Rates are applied where BellSouth is required by FCC and/or State Commission rule to provide Unbundled Local Switching or Switch Ports.																

UNBUNDLED NETWORK ELEMENTS - Kentucky														Attachment: 2 Exh A			
CATEGORY	RATE ELEMENTS	Interim	Zone	BCS	USOC	RATES($)					Svc Order Submitted Elec per LSR	Svc Order Submitted Manually per LSR	Incremental Charge - Manual Svc Order vs. Electronic-1st	Incremental Charge - Manual Svc Order vs. Electronic-Add'l	Incremental Charge - Manual Svc Order vs. Electronic-Disc 1st	Incremental Charge - Manual Svc Order vs. Electronic-Disc Add'l
							Nonrecurring		NRC Disconnect		OSS Rates($)					
						Rec	First	Add'l	First	Add'l	SOMEC	SOMAN	SOMAN	SOMAN	SOMAN	SOMAN
	>The UNE-P Switching Port Rates Reflected in the Cost Based Section Apply to Embedded Base UNE-Ps as of March 10, 2005 and Consist of the TELRIC Cost Based Rates Plus $1.00 in Accordance with the TRRO.															
	>Features shall apply to the Unbundled Port/Loop Combination - Cost Based Rate section in the same manner as they are applied to the Stand-Alone Unbundled Port section of this Rate Exhibit.															
	>End Office and Tandem Switching Usage and Common Transport Usage rates in the Port section of this rate exhibit shall apply to all combinations of loop/port network elements except for UNE Coin Port/Loop Combinations.															
	>The first and additional Port nonrecurring charges apply to Not Currently Combined Combos. For Currently Combined Combos the nonrecurring charges shall be those identified in the Nonrecurring - Currently Combined sections.															
	2-WIRE VOICE GRADE LOOP WITH 2-WIRE LINE PORT (RES)															
	UNE Port/Loop Combination Rates															
	2W VG Loop/Port Combo-Zone 1					11.79										
	2W VG Loop/Port Combo-Zone 2					16.52										
	2W VG Loop/Port Combo-Zone 3					32.74										
	UNE Loop Rates															
	2W VG Loop (SL1)-Zone 1		1	UEPRX	UEPLX	9.64										
	2W VG Loop (SL1)-Zone 2		2	UEPRX	UEPLX	14.37										
	2W VG Loop (SL1)-Zone 3		3	UEPRX	UEPLX	30.59										
	2-Wire Voice Grade Line Port Rates (Res)															
	2W voice unbundled port-residence			UEPRX	UEPRL	2.15	21.29	15.49	2.85	2.67						
	2W voice unbundled port with Caller ID-res			UEPRX	UEPRC	2.15	21.29	15.49	2.85	2.67						
	2W voice unbundled port outgoing only-res			UEPRX	UEPRO	2.15	21.29	15.49	2.85	2.67						
	2W VG unbundled KY extended local dialing parity port with Caller ID-res			UEPRX	UEPRM	2.15	21.29	15.49	2.85	2.67						
	2W voice unbundles res, low usage line port with Caller ID (LUM)			UEPRX	UEPAP	2.15	21.29	15.49	2.85	2.67						
	2W Voice Unbundled KY Residence Dialing Plan w/o Caller ID			UEPRX	UEPWE	2.15	21.29	15.49	2.85	2.67						
	2W voice unbundled Low Usage Line Port w/o Caller ID Capability			UEPRX	UEPRT	2.15	21.29	15.49	2.85	2.67						
	FEATURES															
	All Features Offered			UEPRX	UEPVF	0.00	0.00	0.00								
	NONRECURRING CHARGES (NRCs) - CURRENTLY COMBINED															
	2W VG Loop/Line Port Combination-Conversion-Switch-as-is			UEPRX	USAC2		0.10	0.10								
	2W VG Loop/Line Port Combination -Conversion-Switch with change			UEPRX	USACC		0.10	0.10								
	2W VG Loop/Line Port Platform-Installation Charge at QuickService location-Not Conversion of Existing Service			UEPRX	URECC		0.10									
	ADDITIONAL NRCs															
	2W VG Loop/Line Port Combination-Subsequent Activity			UEPRX	USAS2	0.00	0.00	0.00								
	Unbundled Misc Rate Element, Tag Loop at End User Premise			UEPRX	URETL		8.33	0.83								
	OFF/ON PREMISES EXTENSION CHANNELS															
	2W Analog VG Extension Loop – Non-Design		1	UEPRX	UEAEN	10.56	46.66	22.57	26.65	7.65						
	2W Analog VG Extension Loop – Non-Design		2	UEPRX	UEAEN	15.34	46.66	22.57	26.65	7.65						
	2W Analog VG Extension Loop – Non-Design		3	UEPRX	UEAEN	31.11	46.66	22.57	26.65	7.65						
	2W Analog VG Extension Loop – Design		1	UEPRX	UEAED	12.67	134.89	81.87	73.65	14.88						
	2W Analog VG Extension Loop – Design		2	UEPRX	UEAED	17.45	134.89	81.87	73.65	14.88						
	2W Analog VG Extension Loop – Design		3	UEPRX	UEAED	33.22	134.89	81.87	73.65	14.88						
	INTEROFFICE TRANSPORT															
	Interoffice Transport-Dedicated-2W VG-Facility Termination			UEPRX	U1TV2	23.95	98.09	53.67	56.31	22.42						
	Interoffice Transport-Dedicated-2W VG-Per Mile or Fraction Mile			UEPRX	U1TVM	0.0095	0.00	0.00								
	2-WIRE VOICE GRADE LOOP WITH 2-WIRE LINE PORT (BUS)															
	UNE Port/Loop Combination Rates															
	2W VG Loop/Port Combo-Zone 1					11.79										
	2W VG Loop/Port Combo-Zone 2					16.52										
	2W VG Loop/Port Combo-Zone 3					32.74										
	UNE Loop Rates															
	2W VG Loop (SL1)-Zone 1		1	UEPBX	UEPLX	9.64										
	2W VG Loop (SL1)-Zone 2		2	UEPBX	UEPLX	14.37										
	2W VG Loop (SL1)-Zone 3		3	UEPBX	UEPLX	30.59										
	2-Wire Voice Grade Line Port (Bus)															
	2W voice unbundled port w/o Caller ID-bus			UEPBX	UEPBL	2.15	21.29	15.49	2.85	2.67						
	2W voice unbundled port with Caller + E484 ID-bus			UEPBX	UEPBC	2.15	21.29	15.49	2.85	2.67						
	2W voice unbundled port outgoing only-bus			UEPBX	UEPBO	2.15	21.29	15.49	2.85	2.67						
	2W VG unbundled KY extended local dialing parity port with Caller ID-bus			UEPBX	UEPBM	2.15	21.29	15.49	2.85	2.67						
	2W voice unbundled incoming only port with Caller ID-Bus			UEPBX	UEPB1	2.15	21.29	15.49	2.85	2.67						
	2W Voice Unbundled KY Business Dialing Plan w/o Caller ID			UEPBX	UEPWF	2.15	21.29	15.49	2.85	2.67						

CATEGORY	RATE ELEMENTS	Interim	Zone	BCS	USOC	RATES($)					Svc Order Submitted Elec per LSR	Svc Order Submitted Manually per LSR	Incremental Charge - Manual Svc Order vs. Electronic-1st	Incremental Charge - Manual Svc Order vs. Electronic-Add'l	Incremental Charge - Manual Svc Order vs. Electronic-Disc 1st	Incremental Charge - Manual Svc Order vs. Electronic-Disc Add'l
							Nonrecurring		NRC Disconnect		OSS Rates($)					
						Rec	First	Add'l	First	Add'l	SOMEC	SOMAN	SOMAN	SOMAN	SOMAN	SOMAN
	2W voice unbundled Incoming Only Port w/o Caller ID Capability			UEPBX	UEPBE	2.15	21.29	15.49	2.85	2.67						
FEATURES																
	All Features Offered			UEPBX	UEPVF	0.00	0.00	0.00								
NONRECURRING CHARGES (NRCs) - CURRENTLY COMBINED																
	2W VG Loop/Line Port Combination-Conversion-Switch-as-is			UEPBX	USAC2		0.10	0.10								
	2W VG Loop/Line Port Combination -Conversion-Switch with change			UEPBX	USACC		0.10	0.10								
ADDITIONAL NRCs																
	2W VG Loop/Line Port Combination-Subsequent Activity			UEPBX	USAS2		0.00	0.00								
	Unbundled Misc Rate Element, Tag Loop at End User Premise			UEPBX	URETL		8.33	0.83								
OFF/ON PREMISES EXTENSION CHANNELS																
	2W Analog VG Extension Loop – Non-Design		1	UEPBX	UEAEN	10.56	46.66	22.57	26.65	7.65						
	2W Analog VG Extension Loop – Non-Design		2	UEPBX	UEAEN	15.34	46.66	22.57	26.65	7.65						
	2W Analog VG Extension Loop – Non-Design		3	UEPBX	UEAEN	31.11	46.66	22.57	26.65	7.65						
	2W Analog VG Extension Loop – Design		1	UEPBX	UEAED	12.67	134.89	81.87	73.65	14.88						
	2W Analog VG Extension Loop – Design		2	UEPBX	UEAED	17.45	134.89	81.87	73.65	14.88						
	2W Analog VG Extension Loop – Design		3	UEPBX	UEAED	33.22	134.89	81.87	73.65	14.88						
INTEROFFICE TRANSPORT																
	Interoffice Transport-Dedicated-2W VG-Facility Termination			UEPBX	U1TV2	23.95	98.09	53.67	56.31	22.42						
	Interoffice Transport-Dedicated-2W VG-Per Mile or Fraction Mile			UEPBX	U1TVM	0.0095	0.00	0.00								
2-WIRE VOICE GRADE LOOP WITH 2-WIRE LINE PORT (RES - PBX)																
UNE Port/Loop Combination Rates																
	2W VG Loop/Port Combo-Zone 1					11.79										
	2W VG Loop/Port Combo-Zone 2					16.52										
	2W VG Loop/Port Combo-Zone 3					32.74										
UNE Loop Rates																
	2W VG Loop (SL 1)-Zone 1		1	UEPRG	UEPLX	9.64										
	2W VG Loop (SL 1)-Zone 2		2	UEPRG	UEPLX	14.37										
	2W VG Loop (SL 1)-Zone 3		3	UEPRG	UEPLX	30.59										
2-Wire Voice Grade Line Port Rates (RES - PBX)																
	2W VG Unbundled Combination 2-Way PBX Trunk Port-Res			UEPRG	UEPRD	2.15	21.29	15.49	2.85	2.67						
FEATURES																
	All Features Offered			UEPRG	UEPVF	0.00	0.00	0.00								
NONRECURRING CHARGES (NRCs) - CURRENTLY COMBINED																
	2W VG Loop/ Line Port Combination (PBX)-Conversion-Switch-As-Is			UEPRG	USAC2		8.45	1.91								
	2W VG Loop/ Line Port Combination (PBX)-Conversion-Switch with Change			UEPRG	USACC		8.45	1.91								
ADDITIONAL NRCs																
	2W VG Loop/ Line Port Combination (PBX)-Subsequent Activity			UEPRG	USAS2	0.00	0.00	0.00								
	PBX Subsequent Activity-Change/Rearrange Multiline Hunt Group						7.86	7.86								
	Unbundled Misc Rate Element, Tag Loop at End User Premise			UEPRG	URETL		8.33	0.83								
OFF/ON PREMISES EXTENSION CHANNELS																
	Local Channel VG, per termination		1	UEPRG	P2JHX	12.67	134.89	81.87	73.65	14.88						
	Local Channel VG, per termination		2	UEPRG	P2JHX	17.45	134.89	81.87	73.65	14.88						
	Local Channel VG, per termination		3	UEPRG	P2JHX	33.22	134.89	81.87	73.65	14.88						
	Non-Wire Direct Serve Channel VG		1	UEPRG	SDD2X	12.68	170.06	78.10	119.62	15.80						
	Non-Wire Direct Serve Channel VG		2	UEPRG	SDD2X	18.12	170.06	78.10	119.62	15.80						
	Non-Wire Direct Serve Channel VG		3	UEPRG	SDD2X	29.64	170.06	78.10	119.62	15.00						
INTEROFFICE TRANSPORT																
	Interoffice Transport-Dedicated-2W VG-Facility Termination			UEPRG	U1TV2	23.95	98.09	53.67	56.31	22.42						
	Interoffice Transport-Dedicated-2W VG-Per Mile or Fraction Mile			UEPRG	U1TVM	0.0095	0.00	0.00								
2-WIRE VOICE GRADE LOOP WITH 2-WIRE LINE PORT (BUS - PBX)																
UNE Port/Loop Combination Rates																
	2W VG Loop/Port Combo-Zone 1					11.79										
	2W VG Loop/Port Combo-Zone 2					16.52										
	2W VG Loop/Port Combo-Zone 3					32.74										
UNE Loop Rates																
	2W VG Loop (SL 1)-Zone 1		1	UEPPX	UEPLX	9.64										
	2W VG Loop (SL 1)-Zone 2		2	UEPPX	UEPLX	14.37										
	2W VG Loop (SL 1)-Zone 3		3	UEPPX	UEPLX	30.59										

CATEGORY	RATE ELEMENTS	Interim	Zone	BCS	USOC	RATES($)					Svc Order Submitted Elec per LSR	Svc Order Submitted Manually per LSR	Incremental Charge - Manual Svc Order vs. Electronic-1st	Incremental Charge - Manual Svc Order vs. Electronic-Add'l	Incremental Charge - Manual Svc Order vs. Electronic-Disc 1st	Incremental Charge - Manual Svc Order vs. Electronic-Disc Add'l
							Nonrecurring		NRC Disconnect		OSS Rates($)					
						Rec	First	Add'l	First	Add'l	SOMEC	SOMAN	SOMAN	SOMAN	SOMAN	SOMAN
2-Wire Voice Grade Line Port Rates (BUS - PBX)																
	Line Side Unbundled Combination 2-Way PBX Trunk Port-Bus			UEPPX	UEPPC	2.15	21.29	15.49	2.85	2.67						
	Line Side Unbundled Outward PBX Trunk Port-Bus			UEPPX	UEPPO	2.15	21.29	15.49	2.85	2.67						
	Line Side Unbundled Incoming PBX Trunk Port-Bus			UEPPX	UEPP1	2.15	21.29	15.49	2.85	2.67						
	2W Voice Unbundled PBX LD Terminal Ports			UEPPX	UEPLD	2.15	21.29	15.49	2.85	2.67						
	2W Voice Unbundled 2-Way Combination PBX Usage Port			UEPPX	UEPXA	2.15	21.29	15.49	2.85	2.67						
	2W Voice Unbundled PBX Toll Terminal Hotel Ports			UEPPX	UEPXB	2.15	21.29	15.49	2.85	2.67						
	2W Voice Unbundled PBX LD DDD Terminals Port			UEPPX	UEPXC	2.15	21.29	15.49	2.85	2.67						
	2W Voice Unbundled PBX LD Terminal Switchboard Port			UEPPX	UEPXD	2.15	21.29	15.49	2.85	2.67						
	2W Voice Unbundled PBX LD Terminal Switchboard IDD Capable Port			UEPPX	UEPXE	2.15	21.29	15.49	2.85	2.67						
	2W Voice Unbundled 2-Way PBX KY Rm Area Calling Port w/o LUD			UEPPX	UEPXF	2.15	21.29	15.49	2.85	2.67						
	2W Voice Unbundled PBX KY LUD Area Calling Port			UEPPX	UEPXG	2.15	21.29	15.49	2.85	2.67						
	2W Voice Unbundled PBX KY Premium Calling Port			UEPPX	UEPXH	2.15	21.29	15.49	2.85	2.67						
	2W Voice Unbundled 2-Way KY Area Calling Port w/o LUD			UEPPX	UEPXJ	2.15	21.29	15.49	2.85	2.67						
	2W Voice Unbundled OutDial KY NAR Area Calling Port			UEPPX	UEPOK	2.15	21.29	15.49	2.85	2.67						
	2W Voice Unbundled 2-Way PBX Hotel/Hospital Economy Administrative Calling Port			UEPPX	UEPXL	2.15	21.29	15.49	2.85	2.67						
	2W Voice Unbundled 2-Way PBX Hotel/Hospital Economy Rm Calling Port			UEPPX	UEPXM	2.15	21.29	15.49	2.85	2.67						
	2W Voice Unbundled 1-Way Outgoing PBX Hotel/Hospital Discount Rm Calling Port			UEPPX	UEPXO	2.15	21.29	15.49	2.85	2.67						
	2W Voice Unbundled 1-Way Outgoing PBX Measured Port			UEPPX	UEPXS	2.15	21.29	15.49	2.85	2.67						
FEATURES																
	All Features Offered			UEPPX	UEPVF	0.00	0.00	0.00								
NONRECURRING CHARGES (NRCs) - CURRENTLY COMBINED																
	2W VG Loop/ Line Port Combination (PBX)-Conversion-Switch-As-Is			UEPPX	USAC2		8.45	1.91								
	2W VG Loop/ Line Port Combination (PBX)-Conversion-Switch with Change			UEPPX	USACC		8.45	1.91								
ADDITIONAL NRCs																
	2W VG Loop/ Line Port Combination (PBX)-Subsequent Activity			UEPPX	USAS2	0.00	0.00	0.00								
	PBX Subsequent Activity-Change/Rearrange Multiline Hunt Group						7.86	7.86								
	Unbundled Misc Rate Element, Tag Loop at End User Premise			UEPPX	URETL		8.33	0.83								
OFF/ON PREMISES EXTENSION CHANNELS																
	Local Channel VG, per termination		1	UEPPX	P2JHX	12.67	134.89	81.87	73.65	14.88						
	Local Channel VG, per termination		2	UEPPX	P2JHX	17.45	134.89	81.87	73.65	14.88						
	Local Channel VG, per termination		3	UEPPX	P2JHX	33.22	134.89	81.87	73.65	14.88						
	Non-Wire Direct Serve Channel VG		1	UEPPX	SDD2X	12.68	170.06	78.10	119.62	15.80						
	Non-Wire Direct Serve Channel VG		2	UEPPX	SDD2X	18.12	170.06	78.10	119.62	15.80						
	Non-Wire Direct Serve Channel VG		3	UEPPX	SDD2X	29.64	170.06	78.10	119.62	15.00						
INTEROFFICE TRANSPORT																
	Interoffice Transport-Dedicated-2W VG-Facility Termination			UEPPX	U1TV2	23.95	98.09	53.67	56.31	22.42						
	Interoffice Transport-Dedicated-2W VG-Per Mile or Fraction Mile			UEPPX	U1TVM	0.0095	0.00	0.00								
2-WIRE VOICE GRADE LOOP WITH 2-WIRE ANALOG LINE COIN PORT																
UNE Port/Loop Combination Rates																
	2W VG Coin Port/Loop Combo – Zone 1					11.79										
	2W VG Coin Port/Loop Combo – Zone 2					16.52										
	2W VG Coin Port/Loop Combo – Zone 3					32.74										
UNE Loop Rates																
	2W VG Loop (SL1)-Zone 1		1	UEPCO	UEPLX	9.64										
	2W VG Loop (SL1)-Zone 2		2	UEPCO	UEPLX	14.37										
	2W VG Loop (SL1)-Zone 3		3	UEPCO	UEPLX	30.59										
2-Wire Voice Grade Line Ports (COIN)																
	2W Coin 2-Way w/o Operator Screening and w/o Blocking (AL, KY, LA, MS)			UEPCO	UEPRF	2.15	21.29	15.49	2.85	2.67						
	2W Coin 2-Way with Operator Screening (AL, KY)			UEPCO	UEPRE	2.15	21.29	15.49	2.85	2.67						
	2W Coin 2-Way with Operator Screening and Blocking: 011, 900/976, 1+DDD (AL, KY, LA, MS)			UEPCO	UEPRA	2.15	21.29	15.49	2.85	2.67						
	2W Coin 2-Way with Operator Screening and 011 Blocking (KY)			UEPCO	UEPKA	2.15	21.29	15.49	2.85	2.67						

UNBUNDLED NETWORK ELEMENTS - Kentucky														Attachment: 2 Exh A			
CATEGORY	RATE ELEMENTS	Interim	Zone	BCS	USOC	RATES($)					Svc Order Submitted Elec per LSR	Svc Order Submitted Manually per LSR	Incremental Charge - Manual Svc Order vs. Electronic-1st	Incremental Charge - Manual Svc Order vs. Electronic-Add'l	Incremental Charge - Manual Svc Order vs. Electronic-Disc 1st	Incremental Charge - Manual Svc Order vs. Electronic-Disc Add'l
							Nonrecurring		NRC Disconnect		OSS Rates($)					
						Rec	First	Add'l	First	Add'l	SOMEC	SOMAN	SOMAN	SOMAN	SOMAN	SOMAN
	2W Coin 2-Way with Operator Screening & Blocking: 900/976, 1+DDD, 011+, & Local (AL, KY, LA, MS)			UEPCO	UEPCD	2.15	21.29	15.49	2.85	2.67						
	2W Coin Outward w/o Blocking and w/o Operator Screening (KY, LA, MS)			UEPCO	UEPRN	2.15	21.29	15.49	2.85	2.67						
	2W Coin Outward with Operator Screening and 011 Blocking (GA, KY, MS)			UEPCO	UEPRJ	2.15	21.29	15.49	2.85	2.67						
	2W Coin Outward with Operator Screening and Blocking: 011, 900/976, 1+DDD (AL, KY, LA, MS)			UEPCO	UEPRH	2.15	21.29	15.49	2.85	2.67						
	2W Coin Outward Operator Screening & Blocking: 900/976, 1+DDD, 011+, and Local (AL, KY, LA, MS)			UEPCO	UEPCN	2.15	21.29	15.49	2.85	2.67						
	2W 2-Way Smartline with 900/976 (all states except LA)			UEPCO	UEPCK	2.15	21.29	15.49	2.85	2.67						
	2W Coin Outward Smartline with 900/976 (all states except LA)			UEPCO	UEPCR	2.15	21.29	15.49	2.85	2.67						
ADDITIONAL UNE COIN PORT/LOOP (RC)																
	UNE Coin Port/Loop Combo Usage (Flat Rate)			UEPCO	URECU	2.57	0.00	0.00	0.00	0.00						
NONRECURRING CHARGES - CURRENTLY COMBINED																
	2W VG Loop/Line Port Combination -Conversion-Switch-as-is			UEPCO	USAC2		0.10	0.10								
	2W VG Loop/Line Port Combination -Conversion-Switch with change			UEPCO	USACC		0.10	0.10								
ADDITIONAL NRCs																
	2W VG Loop/Line Port Combination-Subsequent Activity			UEPCO	USAS2		0.00	0.00								
	Unbundled Misc Rate Element, Tag Loop at End User Premise			UEPCO	URETL		8.33	0.83								
2-WIRE VOICE LOOP/ 2WIRE VOICE GRADE IO TRANSPORT/ 2-WIRE LINE PORT (RES)																
UNE Port/Loop Combination Rates																
	2W VG Loop/IO Tranport/Port Combo-Zone 1					14.90										
	2W VG Loop/IO Tranport/Port Combo-Zone 2					19.68										
	2W VG Loop/IO Tranport/Port Combo-Zone 3					35.45										
UNE Loop Rates																
	2W VG Loop (SL2)-Zone 1		1	UEPFR	UECF2	12.67										
	2W VG Loop (SL2)-Zone 2		2	UEPFR	UECF2	17.45										
	2W VG Loop (SL2)-Zone 3		3	UEPFR	UECF2	33.22										
2-Wire Voice Grade Line Port Rates (Res)																
	2W voice unbundled port-residence			UEPFR	UEPRL	2.23	128.96	64.11	61.92	9.97						
	2W voice unbundled port with Caller ID-res			UEPFR	UEPRC	2.23	128.96	64.11	61.92	9.97						
	2W voice unbundled port outgoing only-res			UEPFR	UEPRO	2.23	128.96	64.11	61.92	9.97						
	2W VG unbundled KY extended local dialing parity port with Caller ID-res			UEPFR	UEPRM	2.23	128.96	64.11	61.92	9.97						
	2W voice unbundles res, low usage line port with Caller ID (LUM)			UEPFR	UEPAP	2.23	128.96	64.11	61.92	9.97						
	2W Voice Unbundled KY Residence Dialing Plan w/o Caller ID			UEPFR	UEPWE	2.23	128.96	64.11	61.92	9.97						
INTEROFFICE TRANSPORT																
	Interoffice Transport-Dedicated-2W VG-Facility Termination			UEPFR	U1TV2	23.95	98.09	53.67	56.31	22.42						
	Interoffice Transport-Dedicated-2W VG-Per Mile or Fraction Mile			UEPFR	1L5XX	0.0095										
FEATURES																
	All Features Offered			UEPFR	UEPVF	0.00	0.00	0.00								
NONRECURRING CHARGES (NRCs) - CURRENTLY COMBINED																
	2W Loop/Dedicated IO Transport/2W Line Port Combination-Conversion-Switch-as-is			UEPFR	USAC2		9.03	1.87								
	2W Loop/Dedicated IO Transport/2W Line Port Combination-Conversion-Switch-With-Change			UEPFR	USACC		9.03	1.87								
	Unbundled Misc Rate Element, Tag Designed Loop at End User Premise			UEPFR	URETN		11.21	1.10								
2-WIRE VOICE LOOP/ 2WIRE VOICE GRADE IO TRANSPORT/ 2-WIRE LINE PORT (BUS)																
UNE Port/Loop Combination Rates																
	2W VG Loop/IO Tranport/Port Combo-Zone 1					14.90										
	2W VG Loop/IO Tranport/Port Combo-Zone 2					19.68										
	2W VG Loop/IO Tranport/Port Combo-Zone 3					35.45										
UNE Loop Rates																
	2W VG Loop (SL2)-Zone 1		1	UEPFB	UECF2	12.67										
	2W VG Loop (SL2)-Zone 2		2	UEPFB	UECF2	17.45										
	2W VG Loop (SL2)-Zone 3		3	UEPFB	UECF2	33.22										
2-Wire Voice Grade Line Port (Bus)																

CATEGORY	RATE ELEMENTS	Interim	Zone	BCS	USOC	RATES($)					Svc Order Submitted Elec per LSR	Svc Order Submitted Manually per LSR	Incremental Charge - Manual Svc Order vs. Electronic-1st	Incremental Charge - Manual Svc Order vs. Electronic-Add'l	Incremental Charge - Manual Svc Order vs. Electronic-Disc 1st	Incremental Charge - Manual Svc Order vs. Electronic-Disc Add'l
							Nonrecurring		NRC Disconnect		OSS Rates($)					
						Rec	First	Add'l	First	Add'l	SOMEC	SOMAN	SOMAN	SOMAN	SOMAN	SOMAN
	2W voice unbundled port w/o Caller ID-bus			UEPFB	UEPBL	2.23	128.96	64.11	61.92	9.97						
	2W voice unbundled port with Caller + E484 ID-bus			UEPFB	UEPBC	2.23	128.96	64.11	61.92	9.97						
	2W voice unbundled port outgoing only-bus			UEPFB	UEPBO	2.23	128.96	64.11	61.92	9.97						
	2W VG unbundled KY extended local dialing parity port with Caller ID-bus			UEPFB	UEPBM	2.23	128.96	64.11	61.92	9.97						
	2W voice unbundled incoming only port with Caller ID-Bus			UEPFB	UEPB1	2.23	128.96	64.11	61.92	9.97						
	2W Voice Unbundled KY Business Dialing Plan w/o Caller ID			UEPFB	UEPWF	2.23	128.96	64.11	61.92	9.97						
INTEROFFICE TRANSPORT																
	Interoffice Transport-Dedicated-2W VG-Facility Termination			UEPFB	U1TV2	23.95	98.09	53.67	56.31	22.42						
	Interoffice Transport-Dedicated-2W VG-Per Mile or Fraction Mile			UEPFB	1L5XX	0.0095										
FEATURES																
	All Features Offered			UEPFB	UEPVF	0.00	0.00	0.00								
NONRECURRING CHARGES (NRCs) - CURRENTLY COMBINED																
	2W Loop/Dedicated IO Transport/2W Line Port Combination-Conversion-Switch-as-is			UEPFB	USAC2		9.03	1.87								
	2W Loop/Dedicated IO Transport/2W Line Port Combination-Conversion-Switch with change			UEPFB	USACC		9.03	1.87								
	Unbundled Misc Rate Element, Tag Designed Loop at End User Premise			UEPFB	URETN		11.21	1.10								
2-WIRE VOICE LOOP/ 2WIRE VOICE GRADE IO TRANSPORT/ 2-WIRE LINE PORT (PBX)																
UNE Port/Loop Combination Rates																
	2W VG Loop/IO Tranport/Port Combo-Zone 1					14.90										
	2W VG Loop/IO Tranport/Port Combo-Zone 2					19.68										
	2W VG Loop/IO Tranport/Port Combo-Zone 3					35.45										
UNE Loop Rates																
	2W VG Loop (SL2)-Zone 1		1	UEPFP	UECF2	12.67										
	2W VG Loop (SL2)-Zone 2		2	UEPFP	UECF2	17.45										
	2W VG Loop (SL2)-Zone 3		3	UEPFP	UECF2	33.22										
2-Wire Voice Grade Line Port Rates (BUS - PBX)																
	Line Side Unbundled Combination 2-Way PBX Trunk Port-Bus			UEPFP	UEPPC	2.23	164.27	78.65	75.05	8.73						
	Line Side Unbundled Outward PBX Trunk Port-Bus			UEPFP	UEPPO	2.23	164.27	78.65	75.05	8.73						
	Line Side Unbundled Incoming PBX Trunk Port-Bus			UEPFP	UEPP1	2.23	164.27	78.65	75.05	8.73						
	2W Voice Unbundled PBX LD Terminal Ports			UEPFP	UEPLD	2.23	164.27	78.65	75.05	8.73						
	2W Voice Unbundled 2-Way Combination PBX Usage Port			UEPFP	UEPXA	2.23	164.27	78.65	75.05	8.73						
	2W Voice Unbundled PBX Toll Terminal Hotel Ports			UEPFP	UEPXB	2.23	164.27	78.65	75.05	8.73						
	2W Voice Unbundled PBX LD DDD Terminals Port			UEPFP	UEPXC	2.23	164.27	78.65	75.05	8.73						
	2W Voice Unbundled PBX LD Terminal Switchboard Port			UEPFP	UEPXD	2.23	164.27	78.65	75.05	8.73						
	2W Voice Unbundled PBX LD Terminal Switchboard IDD Capable Port			UEPFP	UEPXE	2.23	164.27	78.65	75.05	8.73						
	2W Voice Unbundled 2-Way PBX KY Rm Area Calling Port w/o LUD			UEPFP	UEPXF	2.23	164.27	78.65	75.05	8.73						
	2W Voice Unbundled PBX KY LUD Area Calling Port			UEPFP	UEPXG	2.23	164.27	78.65	75.05	8.73						
	2W Voice Unbundled PBX KY Premium Calling Port			UEPFP	UEPXH	2.23	164.27	78.65	75.05	8.73						
	2W Voice Unbundled 2-Way KY Area Calling Port w/o LUD			UEPFP	UEPXJ	2.23	164.27	78.65	75.05	8.73						
	2W Voice Unbundled 2-Way PBX Hotel/Hospital Economy Administrative Calling Port			UEPFP	UEPXL	2.23	164.27	78.65	75.05	8.73						
	2W Voice Unbundled 2-Way PBX Hotel/Hospital Economy Rm Calling Port			UEPFP	UEPXM	2.23	164.27	78.65	75.05	8.73						
	2W Voice Unbundled 1-Way Outgoing PBX Hotel/Hospital Discount Rm Calling Port			UEPFP	UEPXO	2.23	164.27	78.65	75.05	8.73						
	2W Voice Unbundled 1-Way Outgoing PBX Measured Port			UEPFP	UEPXS	2.23	164.27	78.65	75.05	8.73						
INTEROFFICE TRANSPORT																
	Interoffice Transport-Dedicated-2W VG-Facility Termination			UEPFP	U1TV2	23.95	98.09	53.67	56.31	22.42						
	Interoffice Transport-Dedicated-2W VG-Per Mile or Fraction Mile			UEPFP	1L5XX	0.0095										
FEATURES																
	All Features Offered			UEPFP	UEPVF	0.00	0.00	0.00								
NONRECURRING CHARGES (NRCs) - CURRENTLY COMBINED																
	2W Loop/Dedicated IO Transport/2W Line Port Combination-Conversion-Switch-as-is			UEPFP	USAC2		9.03	1.87								

CATEGORY	RATE ELEMENTS	Interim	Zone	BCS	USOC	RATES($)					Svc Order Submitted Elec per LSR	Svc Order Submitted Manually per LSR	Incremental Charge - Manual Svc Order vs. Electronic-1st	Incremental Charge - Manual Svc Order vs. Electronic-Add'l	Incremental Charge - Manual Svc Order vs. Electronic-Disc 1st	Incremental Charge - Manual Svc Order vs. Electronic-Disc Add'l
							Nonrecurring		NRC Disconnect		OSS Rates($)					
						Rec	First	Add'l	First	Add'l	SOMEC	SOMAN	SOMAN	SOMAN	SOMAN	SOMAN
	2W Loop/Dedicated IO Transport/2W Line Port Combination-Conversion-Switch with change			UEPFP	USACC		9.03	1.87								
	Unbundled Misc Rate Element, Tag Designed Loop at End User Premise			UEPFP	URETN		11.21	1.10								
2-WIRE VOICE GRADE LOOP- BUS ONLY - WITH 2-WIRE DID TRUNK PORT																
UNE Port/Loop Combination Rates																
	2W VG Loop/2W DID Trunk Port Combo-UNE Zone 1					22.30										
	2W VG Loop/2W DID Trunk Port Combo-UNE Zone 2					27.08										
	2W VG Loop/2W DID Trunk Port Combo-UNE Zone 3					42.85										
UNE Loop Rates																
	2W Analog VG Loop- (SL2)-UNE Zone 1		1	UEPPX	UECD1	12.67										
	2W Analog VG Loop- (SL2)-UNE Zone 2		2	UEPPX	UECD1	17.45										
	2W Analog VG Loop- (SL2)-UNE Zone 3		3	UEPPX	UECD1	33.22										
UNE Port Rate																
	Exchange Ports-2W DID Port			UEPPX	UEPD1	9.63	336.11	27.75	132.37	9.31						
NONRECURRING CHARGES - CURRENTLY COMBINED																
	2W VG Loop/2W DID Trunk Port Conversion with BellSouth Allowable Changes			UEPPX	USA1C		7.85	1.87								
ADDITIONAL NRCs																
	2W DID Subsequent Activity-Add Trunks, Per Trunk			UEPPX	USAS1		32.25	32.25								
	Unbundled Misc Rate Element, Tag Designed Loop at End User Premise			UEPPX	URETN		11.21	1.10								
Telephone Number/Trunk Group Establisment Charges																
	DID Trunk Termination (One Per Port)			UEPPX	NDT	0.00	0.00	0.00								
	Additional DID Numbers for each Group of 20 DID Numbers			UEPPX	ND4	0.00	0.00	0.00								
	DID Numbers, Non- consecutive DID Numbers , Per Number			UEPPX	ND5	0.00	0.00	0.00								
	Reserve Non-Consecutive DID numbers			UEPPX	ND6	0.00	0.00	0.00								
	Reserve DID Numbers			UEPPX	NDV	0.00	0.00	0.00								
2-WIRE ISDN DIGITAL GRADE LOOP WITH 2-WIRE ISDN DIGITAL LINE SIDE PORT																
UNE Port/Loop Combination Rates																
	2W ISDN Digital Grade Loop/2W ISDN Digital Line Side Port -UNE Zone 1					26.69										
	2W ISDN Digital Grade Loop/2W ISDN Digital Line Side Port -UNE Zone 2					32.92										
	2W ISDN Digital Grade Loop/2W ISDN Digital Line Side Port -UNE Zone 3					51.21										
UNE Loop Rates																
	2W ISDN Digital Grade Loop-UNE Zone 1		1	UEPPB UEPPR	USL2X	16.10										
	2W ISDN Digital Grade Loop-UNE Zone 2		2	UEPPB UEPPR	USL2X	22.33										
	2W ISDN Digital Grade Loop-UNE Zone 3		3	UEPPB UEPPR	USL2X	40.63										
UNE Port Rate																
	Exchange Port-2W ISDN Line Side Port			UEPPR	UEPPR	10.59	320.53	289.13	92.19	17.56						
	Exchange Port-2W ISDN Line Side Port			UEPPB	UEPPB	10.59	320.53	289.13	92.19	17.56						
NONRECURRING CHARGES - CURRENTLY COMBINED																
	2W ISDN Digital Grade Loop/2W ISDN Line Side Port Combination-Conversion			UEPPB UEPPR	USACB	0.00	22.77	17.00								
ADDITIONAL NRCs																
	Unbundled Misc Rate Element, Tag Designed Loop at End User Premise			UEPPB UEPPR	URETN		11.21	1.10								
	Unbundled Misc Rate Element, Tag Loop at End User Premise			UEPPB UEPPR	URETL		8.33	0.83								
B-CHANNEL USER PROFILE ACCESS:																
	CVS/CSD (DMS/5ESS)			UEPPB UEPPR	U1UCA	0.00	0.00	0.00								
	CVS (EWSD)			UEPPB UEPPR	U1UCB	0.00	0.00	0.00								
	CSD			UEPPB UEPPR	U1UCC	0.00	0.00	0.00								
B-CHANNEL AREA PLUS USER PROFILE ACCESS: (AL,KY,LA,MS SC,MS, & TN)																
	CVS/CSD (DMS/5ESS)			UEPPB UEPPR	U1UCD	0.00	0.00	0.00								
	CVS (EWSD)			UEPPB UEPPR	U1UCE	0.00	0.00	0.00								
	CSD			UEPPB UEPPR	U1UCF	0.00	0.00	0.00								

UNBUNDLED NETWORK ELEMENTS - Kentucky														Attachment: 2 Exh A			
CATEGORY	RATE ELEMENTS	Interim	Zone	BCS	USOC	RATES($)					Svc Order Submitted Elec per LSR	Svc Order Submitted Manually per LSR	Incremental Charge - Manual Svc Order vs. Electronic-1st	Incremental Charge - Manual Svc Order vs. Electronic-Add'l	Incremental Charge - Manual Svc Order vs. Electronic-Disc 1st	Incremental Charge - Manual Svc Order vs. Electronic-Disc Add'l
							Nonrecurring		NRC Disconnect		OSS Rates($)					
						Rec	First	Add'l	First	Add'l	SOMEC	SOMAN	SOMAN	SOMAN	SOMAN	SOMAN
USER TERMINAL PROFILE																
	User Terminal Profile (EWSD only)			UEPPB UEPPR	U1UMA	0.00	0.00	0.00								
VERTICAL FEATURES																
	All Vertical Features-One per Channel B User Profile			UEPPB UEPPR	UEPVF	0.00	0.00	0.00								
INTEROFFICE CHANNEL MILEAGE																
	Interoffice Channel mileage each, including first mile and facilities termination			UEPPB UEPPR	M1GNC	29.12	47.34	31.78	22.77	8.75						
	Interoffice Channel mileage each, additional mile			UEPPB UEPPR	M1GNM	0.01	0.00	0.00								
UNBUNDLED CENTREX PORT/LOOP COMBINATIONS - COST BASED RATES																
UNE-P CENTREX - 1AESS - (Valid in AL,FL,GA,KY,LA,MS,&TN only)																
2-Wire VG Loop/2-Wire Voice Grade Port (Centrex) Combo																
UNE Port/Loop Combination Rates (Non-Design)																
	2W VG Loop/2W VG Port (Centrex) Port Combo-Non-Design					11.79										
	2W VG Loop/2W VG Port (Centrex)Port Combo-Non-Design					16.52										
	2W VG Loop/2W VG Port (Centrex)Port Combo-Non-Design					32.74										
UNE Port/Loop Combination Rates (Design)																
	2W VG Loop/2W VG Port (Centrex) Port Combo-Design					14.82										
	2W VG Loop/2W VG Port (Centrex)Port Combo-Design					19.60										
	2W VG Loop/2W VG Port (Centrex)Port Combo-Design					35.37										
UNE Loop Rate																
	2W VG Loop (SL 1)-Zone 1		1	UEP91	UECS1	9.64										
	2W VG Loop (SL 1)-Zone 2		2	UEP91	UECS1	14.37										
	2W VG Loop (SL 1)-Zone 3		3	UEP91	UECS1	30.59										
	2W VG Loop (SL 2)-Zone 1		1	UEP91	UECS2	12.67										
	2W VG Loop (SL 2)-Zone 2		2	UEP91	UECS2	17.45										
	2W VG Loop (SL 2)-Zone 3		3	UEP91	UECS2	33.22										
UNE Ports																
All States (Except North Carolina and Sout Carolina)																
	2W VG Port (Centrex) Basic Local Area			UEP91	UEPYA	2.15	21.29	15.49	2.85	2.67						
	2W VG Port (Centrex 800 termination)Basic Local Area			UEP91	UEPYB	2.15	21.29	15.49	2.85	2.67						
	2W VG Port (Centrex with Caller ID)Note1 Basic Local Area			UEP91	UEPYH	2.15	21.29	15.49	2.85	2.67						
	2W VG Port (Centrex from diff SWC) Note 2, 3 Basic Local Area			UEP91	UEPYM	2.15	21.29	15.49	2.85	2.67						
	2W VG Port, Diff SWC-800 Service Term-Basic Local Area			UEP91	UEPYZ	2.15	21.29	15.49	2.85	2.67						
	2W VG Port terminated in on Megalink or equivalent-Basic Local Area			UEP91	UEPY9	2.15	21.29	15.49	2.85	2.67						
	2W VG Port Terminated on 800 Service Term-Basic Local Area			UEP91	UEPY2	2.15	21.29	15.49	2.85	2.67						
AL, KY, LA, MS, & TN Only																
	2W VG Port (Centrex)			UEP91	UEPQA	2.15	21.29	15.49	2.85	2.67						
	2W VG Port (Centrex 800 termination)			UEP91	UEPQB	2.15	21.29	15.49	2.85	2.67						
	2W VG Port (Centrex with Caller ID)1			UEP91	UEPQH	2.15	21.29	15.49	2.85	2.67						
	2W VG Port (Centrex from diff SWC)2,3			UEP91	UEPQM	2.15	21.29	15.49	2.85	2.67						
	2W VG Port, Diff SWC-2,3-800 Service Term			UEP91	UEPQZ	2.15	21.29	15.49	2.85	2.67						
	2W VG Port terminated in on Megalink or equivalent			UEP91	UEPQ9	2.15	21.29	15.49	2.85	2.67						
	2W VG Port Terminated on 800 Service Term			UEP91	UEPQ2	2.15	21.29	15.49	2.85	2.67						
Local Switching																
	Centrex Intercom Funtionality, per port			UEP91	URECS	0.8873										
Features																
	All Standard Features Offered, per port			UEP91	UEPVF	0.00										
	All Select Features Offered, per port			UEP91	UEPVS	0.00	405.66									
	All Centrex Control Features Offered, per port			UEP91	UEPVC	0.00										
NARS																
	Unbundled Network Access Register-Combination			UEP91	UARCX	0.00	0.00	0.00	0.00	0.00						
	Unbundled Network Access Register-Indial			UEP91	UAR1X	0.00	0.00	0.00	0.00	0.00						
	Unbundled Network Access Register-Outdial			UEP91	UAROX	0.00	0.00	0.00	0.00	0.00						
Misc Terminations																
2-Wire Trunk Side																
	Trunk Side Terminations, each			UEP91	CENA6	10.51	92.18	15.82	52.16	5.30						
Interoffice Channel Mileage - 2-Wire																
	Interoffice Channel Facilities Termination-VG			UEP91	M1GBC	29.11										

CATEGORY	RATE ELEMENTS	Interim	Zone	BCS	USOC	RATES($)					Svc Order Submitted Elec per LSR	Svc Order Submitted Manually per LSR	Incremental Charge - Manual Svc Order vs. Electronic-1st	Incremental Charge - Manual Svc Order vs. Electronic-Add'l	Incremental Charge - Manual Svc Order vs. Electronic-Disc 1st	Incremental Charge - Manual Svc Order vs. Electronic-Disc Add'l
							Nonrecurring		NRC Disconnect		OSS Rates($)					
						Rec	First	Add'l	First	Add'l	SOMEC	SOMAN	SOMAN	SOMAN	SOMAN	SOMAN
	Interoffice Channel mileage, per mile or fraction of mile			UEP91	M1GBM	0.01										
Feature Activations (DS0) Centrex Loops on Channelized DS1 Service																
D4 Channel Bank Feature Activations																
	Feature Activation on D-4 Channel Bank Centrex Loop Slot			UEP91	1PQWS	0.62										
	Feature Activation on D-4 Channel Bank FX line Side Loop Slot			UEP91	1PQW6	0.62										
	Feature Activation on D-4 Channel Bank FX Trunk Side Loop Slot			UEP91	1PQW7	0.62										
	Feature Activation on D-4 Channel Bank Centrex Loop Slot-Different WC			UEP91	1PQWP	0.62										
	Feature Activation on D-4 Channel Bank Private Line Loop Slot			UEP91	1PQWV	0.62										
	Feature Activation on D-4 Channel Bank Tjie Line/Trunk Loop Slot			UEP91	1PQWQ	0.62										
	Feature Activation on D-4 Channel Bank WATS Loop Slot			UEP91	1PQWA	0.62										
Non-Recurring Charges (NRC) Associated with UNE-P Centrex																
	Conversion-Currently Combined Switch-As-Is with allowed changes, per port			UEP91	USAC2		0.102	0.102								
	Conversion of Existing Centrex Common Block			UEP91	USACN		18.95	8.32								
	New Centrex Standard Common Block			UEP91	M1ACS	0.00	669.80	78.32	111.05	13.27						
	New Centrex Customized Common Block			UEP91	M1ACC	0.00	669.80	78.32	111.05	13.27						
	Secondary Block, per Block			UEP91	M2CC1	0.00	78.32	78.32	13.27	13.27						
	NAR Establishment Charge, Per Occasion			UEP91	URECA	0.00	72.75									
Additional Non-Recurring Charges (NRC)																
	Unbundled Misc Rate Element, Tag Loop at End Use Premise			UEP91	URETL		8.33	0.83								
	Unbundled Misc Rate Element, Tag Design Loop at End Use Premise			UEP91	URETN		11.21	1.10								
UNE-P CENTREX - 5ESS (Valid in All States)																
2-Wire VG Loop/2-Wire Voice Grade Port (Centrex) Combo																
UNE Port/Loop Combination Rates (Non-Design)																
	2W VG Loop/2W VG Port (Centrex) Port Combo-Non-Design					11.79										
	2W VG Loop/2W VG Port (Centrex)Port Combo-Non-Design					16.52										
	2W VG Loop/2W VG Port (Centrex)Port Combo-Non-Design					32.74										
UNE Port/Loop Combination Rates (Design)																
	2W VG Loop/2W VG Port (Centrex) Port Combo-Design					14.82										
	2W VG Loop/2W VG Port (Centrex)Port Combo-Design					19.60										
	2W VG Loop/2W VG Port (Centrex)Port Combo-Design					35.37										
UNE Loop Rate																
	2W VG Loop (SL 1)-Zone 1		1	UEP95	UECS1	9.64										
	2W VG Loop (SL 1)-Zone 2		2	UEP95	UECS1	14.37										
	2W VG Loop (SL 1)-Zone 3		3	UEP95	UECS1	30.59										
	2W VG Loop (SL 2)-Zone 1		1	UEP95	UECS2	12.67										
	2W VG Loop (SL 2)-Zone 2		2	UEP95	UECS2	17.45										
	2W VG Loop (SL 2)-Zone 3		3	UEP95	UECS2	33.22										
UNE Port Rate																
All States																
	2W VG Port (Centrex) Basic Local Area			UEP95	UEPYA	2.15	21.29	15.49	2.85	2.67						
	2W VG Port (Centrex 800 termination)			UEP95	UEPYB	2.15	21.29	15.49	2.85	2.67						
	2W VG Port (Centrex with Caller ID)1Basic Local Area			UEP95	UEPYH	2.15	21.29	15.49	2.85	2.67						
	2W VG Port (Centrex from diff SWC)2,3 Basic Local Area			UEP95	UEPYM	2.15	21.29	15.49	2.85	2.67						
	2W VG Port, Diff SWC 2,3-800 Service Term-Basic Local Area			UEP95	UEPYZ	2.15	21.29	15.49	2.85	2.67						
	2W VG Port terminated in on Megalink or equivalent-Basic Local Area			UEP95	UEPY9	2.15	21.29	15.49	2.85	2.67						
	2W VG Port Terminated on 800 Service Term-Basic Local Area			UEP95	UEPY2	2.15	21.29	15.49	2.85	2.67						
AL, KY, LA, MS, SC, & TN Only																
	2W VG Port (Centrex)			UEP95	UEPQA	2.15	21.29	15.49	2.85	2.67						
	2W VG Port (Centrex 800 termination)			UEP95	UEPQB	2.15	21.29	15.49	2.85	2.67						
	2W VG Port (Centrex with Caller ID)1			UEP95	UEPQH	2.15	21.29	15.49	2.85	2.67						
	2W VG Port (Centrex from diff SWC)2,3			UEP95	UEPQM	2.15	21.29	15.49	2.85	2.67						
	2W VG Port, Diff SWC-800 Service Term 2,3			UEP95	UEPQZ	2.15	21.29	15.49	2.85	2.67						
	2W VG Port terminated in on Megalink or equivalent			UEP95	UEPQ9	2.15	21.29	15.49	2.85	2.67						
	2W VG Port Terminated on 800 Service Term			UEP95	UEPQ2	2.15	21.29	15.49	2.85	2.67						
Local Switching																

CATEGORY	RATE ELEMENTS	Interim	Zone	BCS	USOC	RATES($)					Svc Order Submitted Elec per LSR	Svc Order Submitted Manually per LSR	Incremental Charge - Manual Svc Order vs. Electronic-1st	Incremental Charge - Manual Svc Order vs. Electronic-Add'l	Incremental Charge - Manual Svc Order vs. Electronic-Disc 1st	Incremental Charge - Manual Svc Order vs. Electronic-Disc Add'l
							Nonrecurring		NRC Disconnect		OSS Rates($)					
						Rec	First	Add'l	First	Add'l	SOMEC	SOMAN	SOMAN	SOMAN	SOMAN	SOMAN
	Centrex Intercom Funtionality, per port			UEP95	URECS	0.8873										
Features																
	All Standard Features Offered, per port			UEP95	UEPVF	0.00										
	All Select Features Offered, per port			UEP95	UEPVS	0.00	405.66									
	All Centrex Control Features Offered, per port			UEP95	UEPVC	0.00										
NARS																
	Unbundled Network Access Register-Combination			UEP95	UARCX	0.00	0.00	0.00	0.00	0.00						
	Unbundled Network Access Register-Indial			UEP95	UAR1X	0.00	0.00	0.00	0.00	0.00						
	Unbundled Network Access Register-Outdial			UEP95	UAROX	0.00	0.00	0.00	0.00	0.00						
Misc Terminations																
2-Wire Trunk Side																
	Trunk Side Terminations, each			UEP95	CEND6	10.51	92.18	15.82	52.16	5.30						
4-Wire Digital (1.544 Megabits)																
	DS1 Circuit Terminations, each			UEP95	M1HD1	74.77	164.86	77.74	60.69	3.86						
	DS0 Channels Activated, each			UEP95	M1HDO	0.00	15.09									
Interoffice Channel Mileage - 2-Wire																
	Interoffice Channel Facilities Termination			UEP95	M1GBC	29.11										
	Interoffice Channel mileage, per mile or fraction of mile			UEP95	M1GBM	0.01										
Feature Activations (DS0) Centrex Loops on Channelized DS1 Service																
D4 Channel Bank Feature Activations																
	Feature Activation on D-4 Channel Bank Centrex Loop Slot			UEP95	1PQWS	0.62										
	Feature Activation on D-4 Channel Bank FX line Side Loop Slot			UEP95	1PQW6	0.62										
	Feature Activation on D-4 Channel Bank FX Trunk Side Loop Slot			UEP95	1PQW7	0.62										
	Feature Activation on D-4 Channel Bank Centrex Loop Slot-Different WC			UEP95	1PQWP	0.62										
	Feature Activation on D-4 Channel Bank Private Line Loop Slot			UEP95	1PQWV	0.62										
	Feature Activation on D-4 Channel Bank Tjie Line/Trunk Loop Slot			UEP95	1PQWQ	0.62										
	Feature Activation on D-4 Channel Bank WATS Loop Slot			UEP95	1PQWA	0.62										
Non-Recurring Charges (NRC) Associated with UNE-P Centrex																
	NRC Conversion Currently Combined Switch-As-Is with allowed changes, per port			UEP95	USAC2		0.102	0.102								
	Conversion of Existing Centrex Common Block, each			UEP95	USACN		18.95	8.32								
	New Centrex Standard Common Block			UEP95	M1ACS	0.00	669.80	78.32	111.05	13.27						
	New Centrex Customized Common Block			UEP95	M1ACC	0.00	669.80	78.32	111.05	13.27						
	NAR Establishment Charge, Per Occasion			UEP95	URECA	0.00	72.75									
Additional Non-Recurring Charges (NRC)																
	Unbundled Misc Rate Element, Tag Loop at End Use Premise			UEP95	URETL		8.33	0.83								
	Unbundled Misc Rate Element, Tag Design Loop at End Use Premise			UEP95	URETN		11.21	1.10								
UNE-P CENTREX - DMS100 (Valid in All States)																
2-Wire VG Loop/2-Wire Voice Grade Port (Centrex) Combo																
UNE Port/Loop Combination Rates (Non-Design)																
	2W VG Loop/2W VG Port (Centrex) Port Combo-Non-Design					11.79										
	2W VG Loop/2W VG Port (Centrex)Port Combo-Non-Design					16.52										
	2W VG Loop/2W VG Port (Centrex)Port Combo-Non-Design					32.74										
UNE Port/Loop Combination Rates (Design)																
	2W VG Loop/2W VG Port (Centrex) Port Combo-Design					14.82										
	2W VG Loop/2W VG Port (Centrex)Port Combo-Design					19.60										
	2W VG Loop/2W VG Port (Centrex)Port Combo-Design					35.37										
UNE Loop Rate																
	2W VG Loop (SL 1)-Zone 1		1	UEP9D	UECS1	9.64										
	2W VG Loop (SL 1)-Zone 2		2	UEP9D	UECS1	14.37										
	2W VG Loop (SL 1)-Zone 3		3	UEP9D	UECS1	30.59										
	2W VG Loop (SL 2)-Zone 1		1	UEP9D	UECS2	12.67										
	2W VG Loop (SL 2)-Zone 2		2	UEP9D	UECS2	17.45										
	2W VG Loop (SL 2)-Zone 3		3	UEP9D	UECS2	33.22										
UNE Port Rate																
ALL STATES																
	2W VG Port (Centrex) Basic Local Area			UEP9D	UEPYA	2.15	21.29	15.49	2.85	2.67						

CATEGORY		RATE ELEMENTS	Interim	Zone	BCS	USOC	RATES($)					Svc Order Submitted Elec per LSR	Svc Order Submitted Manually per LSR	Incremental Charge - Manual Svc Order vs. Electronic-1st	Incremental Charge - Manual Svc Order vs. Electronic-Add'l	Incremental Charge - Manual Svc Order vs. Electronic-Disc 1st	Incremental Charge - Manual Svc Order vs. Electronic-Disc Add'l
								Nonrecurring		NRC Disconnect		OSS Rates($)					
							Rec	First	Add'l	First	Add'l	SOMEC	SOMAN	SOMAN	SOMAN	SOMAN	SOMAN
		2W VG Port (Centrex 800 termination)Basic Local Area			UEP9D	UEPYB	2.15	21.29	15.49	2.85	2.67						
		2W VG Port (Centrex/EBS-PSET)3Basic Local Area			UEP9D	UEPYC	2.15	21.29	15.49	2.85	2.67						
		2W VG Port (Centrex /EBS-M5009)3Basic Local Area			UEP9D	UEPYD	2.15	21.29	15.49	2.85	2.67						
		2W VG Port (Centrex /EBS-M5209))3 Basic Local Area			UEP9D	UEPYE	2.15	21.29	15.49	2.85	2.67						
		2W VG Port (Centrex /EBS-M5112))3 Basic Local Area			UEP9D	UEPYF	2.15	21.29	15.49	2.85	2.67						
		2W VG Port (Centrex /EBS-M5312))3Basic Local Area			UEP9D	UEPYG	2.15	21.29	15.49	2.85	2.67						
		2W VG Port (Centrex /EBS-M5008))3 Basic Local Area			UEP9D	UEPYT	2.15	21.29	15.49	2.85	2.67						
		2W VG Port (Centrex/EBS-M5208))3 Basic Local Area			UEP9D	UEPYU	2.15	21.29	15.49	2.85	2.67						
		2W VG Port (Centrex/EBS-M5216))3 Basic Local Area			UEP9D	UEPYV	2.15	21.29	15.49	2.85	2.67						
		2W VG Port (Centrex/EBS-M5316))3 Basic Local Area			UEP9D	UEPY3	2.15	21.29	15.49	2.85	2.67						
		2W VG Port (Centrex with Caller ID) Basic Local Area			UEP9D	UEPYH	2.15	21.29	15.49	2.85	2.67						
		2W VG Port (Centrex/Caller ID/Msg Wtg Lamp Indication))4 Basic Local Area			UEP9D	UEPYW	2.15	21.29	15.49	2.85	2.67						
		2W VG Port (Centrex/Msg Wtg Lamp Indication))4 Basic Local Area			UEP9D	UEPYJ	2.15	21.29	15.49	2.85	2.67						
		2W VG Port (Centrex from diff SWC) 2,3-Basic Local Area			UEP9D	UEPYM	2.15	21.29	15.49	2.85	2.67						
		2W VG Port (Centrex/differ SWC /EBS-PSET)2,3,4 Basic Local Area			UEP9D	UEPYO	2.15	21.29	15.49	2.85	2.67						
		2W VG Port (Centrex/differ SWC /EBS-M5009)2,3,4 Basic Local Area			UEP9D	UEPYP	2.15	21.29	15.49	2.85	2.67						
		2W VG Port (Centrex/differ SWC /EBS-5209)2,3,4 Basic Local Area			UEP9D	UEPYQ	2.15	21.29	15.49	2.85	2.67						
		2W VG Port (Centrex/differ SWC /EBS-M5112)2,3,4 Basic Local Area			UEP9D	UEPYR	2.15	21.29	15.49	2.85	2.67						
		2W VG Port (Centrex/differ SWC /EBS-M5312)2,3,4 Basic Local Area			UEP9D	UEPYS	2.15	21.29	15.49	2.85	2.67						
		2W VG Port (Centrex/differ SWC /EBS-M5008)2,3,4 Basic Local Area			UEP9D	UEPY4	2.15	21.29	15.49	2.85	2.67						
		2W VG Port (Centrex/differ SWC /EBS-M5208)2, 3 Basic Local Area			UEP9D	UEPY5	2.15	21.29	15.49	2.85	2.67						
		2W VG Port (Centrex/differ SWC /EBS-M5216)2,3,4 Basic Local Area			UEP9D	UEPY6	2.15	21.29	15.49	2.85	2.67						
		2W VG Port (Centrex/differ SWC /EBS-M5316)2,3,4 Basic Local Area			UEP9D	UEPY7	2.15	21.29	15.49	2.85	2.67						
		2W VG Port, Diff SWC-800 Service Term 2,3			UEP9D	UEPYZ	2.15	21.29	15.49	2.85	2.67						
		2W VG Port terminated in on Megalink or equivalent Basic Local Area			UEP9D	UEPY9	2.15	21.29	15.49	2.85	2.67						
		2W VG Port Terminated on 800 Service Term Basic Local Area			UEP9D	UEPY2	2.15	21.29	15.49	2.85	2.67						
	AL, KY, LA, MS, SC, & TN Only																
		2W VG Port (Centrex)			UEP9D	UEPQA	2.15	21.29	15.49	2.85	2.67						
		2W VG Port (Centrex 800 termination)			UEP9D	UEPQB	2.15	21.29	15.49	2.85	2.67						
		2W VG Port (Centrex/EBS-PSET)4			UEP9D	UEPQC	2.15	21.29	15.49	2.85	2.67						
		2W VG Port (Centrex /EBS-M5009)4			UEP9D	UEPQD	2.15	21.29	15.49	2.85	2.67						
		2W VG Port (Centrex /EBS-M5209)4			UEP9D	UEPQE	2.15	21.29	15.49	2.85	2.67						
		2W VG Port (Centrex /EBS-M5112)4			UEP9D	UEPQF	2.15	21.29	15.49	2.85	2.67						
		2W VG Port (Centrex /EBS-M5312)4			UEP9D	UEPQG	2.15	21.29	15.49	2.85	2.67						
		2W VG Port (Centrex /EBS-M5008)4			UEP9D	UEPQT	2.15	21.29	15.49	2.85	2.67						
		2W VG Port (Centrex/EBS-M5208)4			UEP9D	UEPQU	2.15	21.29	15.49	2.85	2.67						
		2W VG Port (Centrex/EBS-M5216)4			UEP9D	UEPQV	2.15	21.29	15.49	2.85	2.67						
		2W VG Port (Centrex/EBS-M5316)4			UEP9D	UEPQ3	2.15	21.29	15.49	2.85	2.67						
		2W VG Port (Centrex with Caller ID)			UEP9D	UEPQH	2.15	21.29	15.49	2.85	2.67						
		2W VG Port (Centrex/Caller ID/Msg Wtg Lamp Indication)4			UEP9D	UEPQW	2.15	21.29	15.49	2.85	2.67						
		2W VG Port (Centrex/Msg Wtg Lamp Indication)4			UEP9D	UEPQJ	2.15	21.29	15.49	2.85	2.67						
		2W VG Port (Centrex from diff SWC) 2,3			UEP9D	UEPQM	2.15	21.29	15.49	2.85	2.67						
		2W VG Port (Centrex/differ SWC /EBS-PSET)2,3,4			UEP9D	UEPQO	2.15	21.29	15.49	2.85	2.67						
		2W VG Port (Centrex/differ SWC /EBS-M5009)2,3,4			UEP9D	UEPQP	2.15	21.29	15.49	2.85	2.67						
		2W VG Port (Centrex/differ SWC /EBS-5209)2,3,4			UEP9D	UEPQQ	2.15	21.29	15.49	2.85	2.67						
		2W VG Port (Centrex/differ SWC /EBS-M5112)2,3,4			UEP9D	UEPQR	2.15	21.29	15.49	2.85	2.67						
		2W VG Port (Centrex/differ SWC /EBS-M5312)2,3,4			UEP9D	UEPQS	2.15	21.29	15.49	2.85	2.67						
		2W VG Port (Centrex/differ SWC /EBS-M5008)2,3,4			UEP9D	UEPQ4	2.15	21.29	15.49	2.85	2.67						
		2W VG Port (Centrex/differ SWC /EBS-M5208)2,3,4			UEP9D	UEPQ5	2.15	21.29	15.49	2.85	2.67						
		2W VG Port (Centrex/differ SWC /EBS-M5216)2,3,4			UEP9D	UEPQ6	2.15	21.29	15.49	2.85	2.67						
		2W VG Port (Centrex/differ SWC /EBS-M5316)2,3,4			UEP9D	UEPQ7	2.15	21.29	15.49	2.85	2.67						

CATEGORY	RATE ELEMENTS	Interim	Zone	BCS	USOC	RATES($)					Svc Order Submitted Elec per LSR	Svc Order Submitted Manually per LSR	Incremental Charge - Manual Svc Order vs. Electronic-1st	Incremental Charge - Manual Svc Order vs. Electronic-Add'l	Incremental Charge - Manual Svc Order vs. Electronic-Disc 1st	Incremental Charge - Manual Svc Order vs. Electronic-Disc Add'l
							Nonrecurring		NRC Disconnect		OSS Rates($)					
						Rec	First	Add'l	First	Add'l	SOMEC	SOMAN	SOMAN	SOMAN	SOMAN	SOMAN
	2W VG Port, Diff SWC-800 Service Term 2,3			UEP9D	UEPQZ	2.15	21.29	15.49	2.85	2.67						
	2W VG Port terminated in on Megalink or equivalent			UEP9D	UEPQ9	2.15	21.29	15.49	2.85	2.67						
	2W VG Port Terminated on 800 Service Term			UEP9D	UEPQ2	2.15	21.29	15.49	2.85	2.67						
Local Switching																
	Centrex Intercom Funtionality, per port			UEP9D	URECS	0.8873										
Features																
	All Standard Features Offered, per port			UEP9D	UEPVF	0.00										
	All Select Features Offered, per port			UEP9D	UEPVS	0.00	405.66									
	All Centrex Control Features Offered, per port			UEP9D	UEPVC	0.00										
NARS																
	Unbundled Network Access Register-Combination			UEP9D	UARCX	0.00	0.00	0.00	0.00	0.00						
	Unbundled Network Access Register-Inward			UEP9D	UAR1X	0.00	0.00	0.00	0.00	0.00						
	Unbundled Network Access Register-Outdial			UEP9D	UAROX	0.00	0.00	0.00	0.00	0.00						
Misc Terminations																
2-Wire Trunk Side																
	Trunk Side Terminations, each			UEP9D	CEND6	10.51	92.18	15.82	52.16	5.30						
4-Wire Digital (1.544 Megabits)																
	DS1 Circuit Terminations, each			UEP9D	M1HD1	74.77	164.86	77.74	60.69	3.86						
	DS0 Channels Activiated per Channel			UEP9D	M1HDO	0.00	15.09									
Interoffice Channel Mileage - 2-Wire																
	Interoffice Channel Facilities Termination			UEP9D	M1GBC	29.11										
	Interoffice Channel mileage, per mile or fraction of mile			UEP9D	M1GBM	0.01										
Feature Activations (DS0) Centrex Loops on Channelized DS1 Service																
D4 Channel Bank Feature Activations																
	Feature Activation on D-4 Channel Bank Centrex Loop Slot			UEP9D	1PQWS	0.62										
	Feature Activation on D-4 Channel Bank FX line Side Loop Slot			UEP9D	1PQW6	0.62										
	Feature Activation on D-4 Channel Bank FX Trunk Side Loop Slot			UEP9D	1PQW7	0.62										
	Feature Activation on D-4 Channel Bank Centrex Loop Slot-Different WC			UEP9D	1PQWP	0.62										
	Feature Activation on D-4 Channel Bank Private Line Loop Slot			UEP9D	1PQWV	0.62										
	Feature Activation on D-4 Channel Bank Tjie Line/Trunk Loop Slot			UEP9D	1PQWQ	0.62										
	Feature Activation on D-4 Channel Bank WATS Loop Slot			UEP9D	1PQWA	0.62										
Non-Recurring Charges (NRC) Associated with UNE-P Centrex																
	NRC Conversion Currently Combined Switch-As-Is with allowed changes, per port			UEP9D	USAC2		0.102	0.102								
	Conversion of existing Centrex Common Block, each			UEP9D	USACN		18.95	8.32								
	New Centrex Standard Common Block			UEP9D	M1ACS	0.00	669.80	78.32	111.05	13.27						
	New Centrex Customized Common Block			UEP9D	M1ACC	0.00	669.80	78.32	111.05	13.27						
	NAR Establishment Charge, Per Occasion			UEP9D	URECA	0.00	72.75									
Additional Non-Recurring Charges (NRC)																
	Unbundled Misc Rate Element, Tag Loop at End Use Premise			UEP9D	URETL		8.33	0.83								
	Unbundled Misc Rate Element, Tag Design Loop at End Use Premise			UEP9D	URETN		11.21	1.10								
UNE-P CENTREX - EWSD (Valid in AL, FL, KY, LA, MS & TN)																
2-Wire VG Loop/2-Wire Voice Grade Port (Centrex) Combo																
UNE Port/Loop Combination Rates (Non-Design)																
	2W VG Loop/2W VG Port (Centrex) Port Combo-Non-Design					11.79										
	2W VG Loop/2W VG Port (Centrex)Port Combo-Non-Design					16.52										
	2W VG Loop/2W VG Port (Centrex)Port Combo-Non-Design					32.74										
UNE Port/Loop Combination Rates (Design)																
	2W VG Loop/2W VG Port (Centrex) Port Combo-Design					14.82										
	2W VG Loop/2W VG Port (Centrex)Port Combo-Design					19.60										
	2W VG Loop/2W VG Port (Centrex)Port Combo-Design					35.37										
UNE Loop Rate																
	2W VG Loop (SL 1)-Zone 1		1	UEP9E	UECS1	9.64										
	2W VG Loop (SL 1)-Zone 2		2	UEP9E	UECS1	14.37										
	2W VG Loop (SL 1)-Zone 3		3	UEP9E	UECS1	30.59										
	2W VG Loop (SL 2)-Zone 1		1	UEP9E	UECS2	12.67										
	2W VG Loop (SL 2)-Zone 2		2	UEP9E	UECS2	17.45										

UNBUNDLED NETWORK ELEMENTS - Kentucky														Attachment: 2 Exh A			
CATEGORY	RATE ELEMENTS	Interim	Zone	BCS	USOC	RATES($)					Svc Order Submitted Elec per LSR	Svc Order Submitted Manually per LSR	Incremental Charge - Manual Svc Order vs. Electronic-1st	Incremental Charge - Manual Svc Order vs. Electronic-Add'l	Incremental Charge - Manual Svc Order vs. Electronic-Disc 1st	Incremental Charge - Manual Svc Order vs. Electronic-Disc Add'l
							Nonrecurring		NRC Disconnect		OSS Rates($)					
						Rec	First	Add'l	First	Add'l	SOMEC	SOMAN	SOMAN	SOMAN	SOMAN	SOMAN
	2W VG Loop (SL 2)-Zone 3		3	UEP9E	UECS2	33.22										
UNE Port Rate																
AL, FL, KY, LA, MS, & TN only																
	2W VG Port (Centrex) Basic Local Area			UEP9E	UEPYA	2.15	21.29	15.49	2.85	2.67						
	2W VG Port (Centrex 800 termination)Basic Local Area			UEP9E	UEPYB	2.15	21.29	15.49	2.85	2.67						
	2W VG Port (Centrex with Caller ID)1Basic Local Area			UEP9E	UEPYH	2.15	21.29	15.49	2.85	2.67						
	2W VG Port (Centrex from diff SWC)2,3 Basic Local Area			UEP9E	UEPYM	2.15	21.29	15.49	2.85	2.67						
	2W VG Port, Diff SWC 2,3-800 Service Term-Basic Local Area			UEP9E	UEPYZ	2.15	21.29	15.49	2.85	2.67						
	2W VG Port terminated in on Megalink or equivalent-Basic Local Area			UEP9E	UEPY9	2.15	21.29	15.49	2.85	2.67						
	2W VG Port Terminated on 800 Service Term-Basic Local Area			UEP9E	UEPY2	2.15	21.29	15.49	2.85	2.67						
AL, KY, LA, MS, & TN Only																
	2W VG Port (Centrex)			UEP9E	UEPQA	2.15	21.29	15.49	2.85	2.67						
	2W VG Port (Centrex 800 termination)			UEP9E	UEPQB	2.15	21.29	15.49	2.85	2.67						
	2W VG Port (Centrex with Caller ID)1			UEP9E	UEPQH	2.15	21.29	15.49	2.85	2.67						
	2W VG Port (Centrex from diff SWC)2,3			UEP9E	UEPQM	2.15	21.29	15.49	2.85	2.67						
	2W VG Port, Diff SWC 2,3 -800 Service Term			UEP9E	UEPQZ	2.15	21.29	15.49	2.85	2.67						
	2W VG Port terminated in on Megalink or equivalent			UEP9E	UEPQ9	2.15	21.29	15.49	2.85	2.67						
	2W VG Port Terminated on 800 Service Term			UEP9E	UEPQ2	2.15	21.29	15.49	2.85	2.67						
Local Switching																
	Centrex Intercom Funtionality, per port			UEP9E	URECS	0.8873										
Features																
	All Standard Features Offered, per port			UEP9E	UEPVF	0.00										
	All Select Features Offered, per port			UEP9E	UEPVS	0.00	405.66									
	All Centrex Control Features Offered, per port			UEP9E	UEPVC	0.00										
NARS																
	Unbundled Network Access Register-Combination			UEP9E	UARCX	0.00	0.00	0.00	0.00	0.00						
	Unbundled Network Access Register-Indial			UEP9E	UAR1X	0.00	0.00	0.00	0.00	0.00						
	Unbundled Network Access Register-Outdial			UEP9E	UAROX	0.00	0.00	0.00	0.00	0.00						
Misc Terminations																
2-Wire Trunk Side																
	Trunk Side Terminations, each			UEP9E	CEND6	10.51	92.18	15.82	52.16	5.30						
4-Wire Digital (1.544 Megabits)																
	DS1 Circuit Terminations, each			UEP9E	M1HD1	74.77	164.86	77.74	60.69	3.86						
	DS0 Channel Activated Per Channel			UEP9E	M1HDO	0.00	15.09									
Interoffice Channel Mileage - 2-Wire																
	Interoffice Channel Facilities Termination			UEP9E	M1GBC	29.11										
	Interoffice Channel mileage, per mile or fraction of mile			UEP9E	M1GBM	0.01										
Feature Activations (DS0) Centrex Loops on Channelized DS1 Service																
D4 Channel Bank Feature Activations																
	Feature Activation on D-4 Channel Bank Centrex Loop Slot			UEP9E	1PQWS	0.62										
	Feature Activation on D-4 Channel Bank FX line Side Loop Slot			UEP9E	1PQW6	0.62										
	Feature Activation on D-4 Channel Bank FX Trunk Side Loop Slot			UEP9E	1PQW7	0.62										
	Feature Activation on D-4 Channel Bank Centrex Loop Slot-Different WC			UEP9E	1PQWP	0.62										
	Feature Activation on D-4 Channel Bank Private Line Loop Slot			UEP9E	1PQWV	0.62										
	Feature Activation on D-4 Channel Bank Tjie Line/Trunk Loop Slot			UEP9E	1PQWQ	0.62										
	Feature Activation on D-4 Channel Bank WATS Loop Slot			UEP9E	1PQWA	0.62										
Non-Recurring Charges (NRC) Associated with UNE-P Centrex																
	NRC Conversion Currently Combined Switch-As-Is with allowed changes, per port			UEP9E	USAC2		0.102	0.102								
	Conversion of Existing Centrex Common Block, each			UEP9E	USACN		18.95	8.32								
	New Centrex Standard Common Block			UEP9E	M1ACS	0.00	669.80	78.32	111.05	13.27						
	New Centrex Customized Common Block			UEP9E	M1ACC	0.00	669.80	78.32	111.05	13.27						
	NAR Establishment Charge, Per Occasion			UEP9E	URECA	0.00	72.75									
Additional Non-Recurring Charges (NRC)																
	Unbundled Misc Rate Element, Tag Loop at End Use Premise			UEP9E	URETL		8.33	0.83								
	Unbundled Misc Rate Element, Tag Design Loop at End Use Premise			UEP9E	URETN		11.21	1.10								

CATEGORY	RATE ELEMENTS	Interim	Zone	BCS	USOC	RATES($)					Svc Order Submitted Elec per LSR	Svc Order Submitted Manually per LSR	Incremental Charge - Manual Svc Order vs. Electronic-1st	Incremental Charge - Manual Svc Order vs. Electronic-Add'l	Incremental Charge - Manual Svc Order vs. Electronic-Disc 1st	Incremental Charge - Manual Svc Order vs. Electronic-Disc Add'l
							Nonrecurring		NRC Disconnect		OSS Rates($)					
						Rec	First	Add'l	First	Add'l	SOMEC	SOMAN	SOMAN	SOMAN	SOMAN	SOMAN
	UNE-P CENTREX - DCO - Valid in AL, KY, LA, MS, & TN)															
	2-Wire VG Loop/2-Wire Voice Grade Port (Centrex) Combo															
	UNE Port/Loop Combination Rates (Non-Design)															
	2W VG Loop/2W VG Port (Centrex) Port Combo-Non-Design					11.79										
	2W VG Loop/2W VG Port (Centrex)Port Combo-Non-Design					16.52										
	2W VG Loop/2W VG Port (Centrex)Port Combo-Non-Design					32.74										
	UNE Port/Loop Combination Rates (Design)															
	2W VG Loop/2W VG Port (Centrex) Port Combo-Design					14.82										
	2W VG Loop/2W VG Port (Centrex)Port Combo-Design					19.60										
	2W VG Loop/2W VG Port (Centrex)Port Combo-Design					35.37										
	UNE Loop Rate															
	2W VG Loop (SL 1)-Zone 1		1	UEP93	UECS1	9.64										
	2W VG Loop (SL 1)-Zone 2		2	UEP93	UECS1	14.37										
	2W VG Loop (SL 1)-Zone 3		3	UEP93	UECS1	30.59										
	2W VG Loop (SL 2)-Zone 1		1	UEP93	UECS2	12.67										
	2W VG Loop (SL 2)-Zone 2		2	UEP93	UECS2	17.45										
	2W VG Loop (SL 2)-Zone 3		3	UEP93	UECS2	33.22										
	UNE Port Rate															
	AL, KY, LA, MS, & TN only															
	2W VG Port (Centrex) Basic Local Area			UEP93	UEPYA	2.15	21.29	15.49	2.85	2.67						
	2W VG Port (Centrex 800 termination)Basic Local Area			UEP93	UEPYB	2.15	21.29	15.49	2.85	2.67						
	2W VG Port (Centrex with Caller ID)1Basic Local Area			UEP93	UEPYH	2.15	21.29	15.49	2.85	2.67						
	2W VG Port (Centrex from diff SWC)2,3 Basic Local Area			UEP93	UEPYM	2.15	21.29	15.49	2.85	2.67						
	2W VG Port, Diff SWC-2,3-800 Service Term-Basic Local Area			UEP93	UEPYZ	2.15	21.29	15.49	2.85	2.67						
	2W VG Port terminated in on Megalink or equivalent-Basic Local Area			UEP93	UEPY9	2.15	21.29	15.49	2.85	2.67						
	2W VG Port Terminated on 800 Service Term-Basic Local Area			UEP93	UEPY2	2.15	21.29	15.49	2.85	2.67						
	2W VG Port (Centrex)			UEP93	UEPQA	2.15	21.29	15.49	2.85	2.67						
	2W VG Port (Centrex 800 termination)			UEP93	UEPQB	2.15	21.29	15.49	2.85	2.67						
	2W VG Port (Centrex with Caller ID)1			UEP93	UEPQH	2.15	21.29	15.49	2.85	2.67						
	2W VG Port (Centrex from diff SWC)2,3			UEP93	UEPQM	2.15	21.29	15.49	2.85	2.67						
	2W VG Port, Diff SWC-2,3 -800 Service Term			UEP93	UEPQZ	2.15	21.29	15.49	2.85	2.67						
	2W VG Port terminated in on Megalink or equivalent			UEP93	UEPQ9	2.15	21.29	15.49	2.85	2.67						
	2W VG Port Terminated on 800 Service Term			UEP93	UEPQ2	2.15	21.29	15.49	2.85	2.67						
	Local Switching															
	Centrex Intercom Funtionality, per port			UEP93	URECS	0.8873										
	Features															
	All Standard Features Offered, per port			UEP93	UEPVF	0.00										
	All Centrex Control Features Offered, per port			UEP93	UEPVC	0.00										
	NARS															
	Unbundled Network Access Register-Combination			UEP93	UARCX	0.00	0.00	0.00	0.00	0.00						
	Unbundled Network Access Register-Indial			UEP93	UAR1X	0.00	0.00	0.00	0.00	0.00						
	Unbundled Network Access Register-Outdial			UEP93	UAROX	0.00	0.00	0.00	0.00	0.00						
	Misc Terminations															
	2-Wire Trunk Side															
	Trunk Side Terminations, each			UEP93	CEND6	10.51	92.18	15.82	52.16	5.30						
	4-Wire Digital (1.544 Megabits)															
	DS1 Circuit Terminations, each			UEP93	M1HD1	74.77	164.86	77.74	60.69	3.86						
	DS0 Channels Activated, Per Channel			UEP93	M1HDO	0.00	15.09									
	Interoffice Channel Mileage - 2-Wire															
	Interoffice Channel Facilities Termination			UEP93	M1GBC	29.11										
	Interoffice Channel mileage, per mile or fraction of mile			UEP93	M1GBM	0.01										
	Feature Activations (DS0) Centrex Loops on Channelized DS1 Service															
	D4 Channel Bank Feature Activations															
	Feature Activation on D-4 Channel Bank Centrex Loop Slot			UEP93	1PQWS	0.62										
	Feature Activation on D-4 Channel Bank FX Line Side Loop Slot			UEP93	1PQW6	0.62										
	Feature Activation on D-4 Channel Bank FX Trunk Side Loop Slot			UEP93	1PQW7	0.62										
	Feature Activation on D-4 Channel Bank Centrex Loop Slot-Different WC			UEP93	1PQWP	0.62										

UNBUNDLED NETWORK ELEMENTS - Kentucky														Attachment: 2 Exh A			
CATEGORY		RATE ELEMENTS	Interim	Zone	BCS	USOC	RATES($)					Svc Order Submitted Elec per LSR	Svc Order Submitted Manually per LSR	Incremental Charge - Manual Svc Order vs. Electronic-1st	Incremental Charge - Manual Svc Order vs. Electronic-Add'l	Incremental Charge - Manual Svc Order vs. Electronic-Disc 1st	Incremental Charge - Manual Svc Order vs. Electronic-Disc Add'l
								Nonrecurring		NRC Disconnect		OSS Rates($)					
							Rec	First	Add'l	First	Add'l	SOMEC	SOMAN	SOMAN	SOMAN	SOMAN	SOMAN
		Feature Activation on D-4 Channel Bank Private Line Loop Slot			UEP93	1PQWV	0.62										
		Feature Activation on D-4 Channel Bank Tie Line/Trunk Loop Slot			UEP93	1PQWQ	0.62										
		Feature Activation on D-4 Channel Bank WATS Loop Slot			UEP93	1PQWA	0.62										
	Non-Recurring Charges (NRC) Associated with UNE-P Centrex																
		NRC Conversion Currently Combined Switch-As-Is with allowed changes, per port			UEP93	USAC2		0.102	0.102								
		Conversion of Existing Centrex Common Block, each			UEP93	USACN		18.95	8.32								
		New Centrex Standard Common Block			UEP93	M1ACS	0.00	669.80	78.32	111.05	13.27						
		New Centrex Customized Common Block			UEP93	M1ACC	0.00	669.80	78.32	111.05	13.27						
		NAR Establishment Charge, Per Occasion			UEP93	URECA	0.00	72.75									
	Additional Non-Recurring Charges (NRC)																
		Unbundled Misc Rate Element, Tag Loop at End Use Premise			UEP93	URETL		8.33	0.83								
		Unbundled Misc Rate Element, Tag Design Loop at End Use Premise			UEP93	URETN		11.21	1.10								
	Note 1 - Required Port for Centrex Control in 1AESS, 5ESS & EWSD																
	Note 2 - Requres Interoffice Channel Mileage																
	Note 3 - Installation is combination of Installation charge for SL2 Loop and Port																
	Note 4 - Requires Specific Customer Premises Equipment																
	Note: Rates displaying an "I" in Interim column are interim as a result of a Commission order.																

UNBUNDLED NETWORK ELEMENTS - Louisiana														Attachment: 2 Exh A			
CATEGORY	RATE ELEMENTS	Interim	Zone	BCS	USOC	RATES($)					Svc Order Submitted Elec per LSR	Svc Order Submitted Manually per LSR	Incremental Charge - Manual Svc Order vs. Electronic-1st	Incremental Charge - Manual Svc Order vs. Electronic-Add'l	Incremental Charge - Manual Svc Order vs. Electronic-Disc 1st	Incremental Charge - Manual Svc Order vs. Electronic-Disc Add'l
							Nonrecurring		NRC Disconnect		OSS Rates($)					
						Rec	First	Add'l	First	Add'l	SOMEC	SOMAN	SOMAN	SOMAN	SOMAN	SOMAN
	The "Zone" shown in the sections for stand-alone loops or loops as part of a combination refers to Geographically Deaveraged UNE Zones. To view Geographically Deaveraged UNE Zone Designations by Central Office, refer to internet Website: http://www.interconnection.bellsouth.com/become_a_clec/html/interconnection.htm															
OPERATIONS SUPPORT SYSTEMS (OSS) - "REGIONAL RATES"																
	NOTE: (1) CLEC should contact its contract negotiator if it prefers the "state specific" OSS charges as ordered by the State Commissions. The OSS charges currently contained in this rate exhibit are the BellSouth "regional" service ordering charges. CLEC may elect either the state specific Commission ordered rates for the service ordering charges, or CLEC may elect the regional service ordering charge, however, CLEC can not obtain a mixture of the two regardless if CLEC has a interconnection															
	NOTE: (2) Any element that can be ordered electronically will be billed according to the SOMEC rate listed in this category. Please refer to BellSouth's Local Ordering Handbook (LOH) to determine if a product can be ordered electronically. For those elements that cannot be ordered electronically at present per the LOH, the listed SOMEC rate in this category reflects the charge that would be billed to a CLEC once electronic ordering capabilities come on-line for that element. Otherwise, the manual															
	OSS-Electronic Service Order Charge, Per Local Service Request (LSR)-UNE Only				SOMEC		3.50	0.00	3.50	0.00						
	OSS-Manual Service Order Charge, Per Local Service Request (LSR)-UNE Only				SOMAN		15.20	0.00	15.20	0.00						
UNE SERVICE DATE ADVANCEMENT CHARGE																
	NOTE: The Expedite charge will be maintained commensurate with BellSouth's FCC No.1 Tariff, Section 5 as applicable.															
	UNE Expedite Charge per Circuit or Line Assignable USOC, per Day			UAL, UEANL, UCL, UEF, UDF, UEQ, UDL, UENTW, UDN, UEA, UHL, ULC, USL, U1T12, U1T48, U1TD1, U1TD3, U1TDX, U1TO3, U1TS1, U1TVX, UC1BC, UC1BL, UC1CC, UC1CL, UC1DC, UC1DL, UC1EC, UC1EL, UC1FC, UC1FL, UC1GC, UC1GL, UC1HC, UC1HL, UDL12, UDL48, UDLO3, UDLSX, UE3, ULD12, ULD48, ULDD1, ULDD3, ULDDX, ULDO3, ULDS1, ULDVX, UNC1X, UNC3X, UNCDX, UNCNX, UNCSX, UNCVX, UNLD1, UNLD3, UXTD1, UXTD3, UXTS1, U1TUC, U1TUD, U1TUB, U1TUA,NTCVG, NTCUD, NTCD1	SDASP		200.00									
ORDER MODIFICATION CHARGE																
	Order Modification Charge (OMC)						26.21	0.00	0.00	0.00						
	Order Modification Additional Dispatch Charge (OMCAD)						150.00	0.00	0.00	0.00						
UNBUNDLED EXCHANGE ACCESS LOOP																
	2-WIRE ANALOG VOICE GRADE LOOP															
	2W Analog VG Loop- SL2 w/Loop or Ground Start Signaling-Zone 1		1	UEA	UEAL2	14.93	102.10	65.72								
	2W Analog VG Loop- SL2 w/Loop or Ground Start Signaling-Zone 2		2	UEA	UEAL2	25.35	102.10	65.72								
	2W Analog VG Loop- SL2 w/Loop or Ground Start Signaling-Zone 3		3	UEA	UEAL2	50.46	102.10	65.72								
	2W Analog VG Loop- SL2 w/Reverse Battery Signaling-Zone 1		1	UEA	UEAR2	14.93	102.10	65.72								
	2W Analog VG Loop- SL2 w/Reverse Battery Signaling-Zone 2		2	UEA	UEAR2	25.35	102.10	65.72								
	2W Analog VG Loop- SL2 w/Reverse Battery Signaling-Zone 3		3	UEA	UEAR2	50.46	102.10	65.72								
	Switch-As-Is Conversion rate per UNE Loop, Single LSR, (per DS0)			UEA	URESL		24.98	3.52								
	Switch-As-Is Conversion rate per UNE Loop, Spreadsheet, (per DS0)			UEA	URESP		26.47	5.01								
	CLEC to CLEC Conversion Charge w/o outside dispatch			UEA	UREWO		87.59	36.30								

CATEGORY	RATE ELEMENTS	Interim	Zone	BCS	USOC	RATES($)					Svc Order Submitted Elec per LSR	Svc Order Submitted Manually per LSR	Incremental Charge - Manual Svc Order vs. Electronic-1st	Incremental Charge - Manual Svc Order vs. Electronic-Add'l	Incremental Charge - Manual Svc Order vs. Electronic-Disc 1st	Incremental Charge - Manual Svc Order vs. Electronic-Disc Add'l
							Nonrecurring		NRC Disconnect		OSS Rates($)					
						Rec	First	Add'l	First	Add'l	SOMEC	SOMAN	SOMAN	SOMAN	SOMAN	SOMAN
	Loop Tagging-SL2 (SL2)			UEA	URETL		11.20	1.10								
4-WIRE ANALOG VOICE GRADE LOOP																
	4W Analog VG Loop-Zone 1		1	UEA	UEAL4	30.81	127.40	91.02								
	4W Analog VG Loop-Zone 2		2	UEA	UEAL4	38.32	127.40	91.02								
	4W Analog VG Loop-Zone 3		3	UEA	UEAL4	60.39	127.40	91.02								
	Switch-As-Is Conversion rate per UNE Loop, Single LSR, (per DS0)			UEA	URESL		24.98	3.52								
	Switch-As-Is Conversion rate per UNE Loop, Spreadsheet, (per DS0)			UEA	URESP		26.47	5.01								
	CLEC to CLEC Conversion Charge w/o outside dispatch			UEA	UREWO		87.59	36.30								
2-WIRE ISDN DIGITAL GRADE LOOP																
	2W ISDN Digital Grade Loop-Zone 1		1	UDN	U1L2X	22.09	113.34	76.96								
	2W ISDN Digital Grade Loop-Zone 2		2	UDN	U1L2X	35.28	113.34	76.96								
	2W ISDN Digital Grade Loop-Zone 3		3	UDN	U1L2X	65.18	113.34	76.96								
	CLEC to CLEC Conversion Charge w/o outside dispatch			UDN	UREWO		91.49	44.09								
2-WIRE ASYMMETRICAL DIGITAL SUBSCRIBER LINE (ADSL) COMPATIBLE LOOP																
	2W Unbundled ADSL Loop including manual service inquiry & facility reservation-Zone 1		1	UAL	UAL2X	12.29	117.08	68.36								
	2W Unbundled ADSL Loop including manual service inquiry & facility reservation-Zone 2		2	UAL	UAL2X	14.09	117.08	68.36								
	2W Unbundled ADSL Loop including manual service inquiry & facility reservation-Zone 3		3	UAL	UAL2X	15.75	117.08	68.36								
	2W Unbundled ADSL Loop w/o manual service inquiry & facility reservaton-Zone 1		1	UAL	UAL2W	12.29	92.83	56.02								
	2W Unbundled ADSL Loop w/o manual service inquiry & facility reservaton-Zone 2		2	UAL	UAL2W	14.09	92.83	56.02								
	2W Unbundled ADSL Loop w/o manual service inquiry & facility reservaton-Zone 3		3	UAL	UAL2W	15.75	92.83	56.02								
	CLEC to CLEC Conversion Charge w/o outside dispatch			UAL	UREWO		86.07	40.34								
2-WIRE HIGH BIT RATE DIGITAL SUBSCRIBER LINE (HDSL) COMPATIBLE LOOP																
	2W Unbundled HDSL Loop including manual service inquiry & facility reservation-Zone 1		1	UHL	UHL2X	9.79	125.50	76.77								
	2W Unbundled HDSL Loop including manual service inquiry & facility reservation-Zone 2		2	UHL	UHL2X	11.52	125.50	76.77								
	2W Unbundled HDSL Loop including manual service inquiry & facility reservation-Zone 3		3	UHL	UHL2X	12.74	125.50	76.77								
	2W Unbundled HDSL Loop w/o manual service inquiry and facility reservation-Zone 1		1	UHL	UHL2W	9.79	101.24	64.43								
	2W Unbundled HDSL Loop w/o manual service inquiry and facility reservation-Zone 2		2	UHL	UHL2W	11.52	101.24	64.43								
	2W Unbundled HDSL Loop w/o manual service inquiry and facility reservation-Zone 3		3	UHL	UHL2W	12.74	101.24	64.43								
	CLEC to CLEC Conversion Charge w/o outside dispatch			UHL	UREWO		86.00	40.34								
4-WIRE HIGH BIT RATE DIGITAL SUBSCRIBER LINE (HDSL) COMPATIBLE LOOP																
	4 Wire Unbundled HDSL Loop including manual service inquiry and facility reservation-Zone 1		1	UHL	UHL4X	16.24	153.26	104.54								
	4W Unbundled HDSL Loop including manual service inquiry and facility reservation-Zone 2		2	UHL	UHL4X	16.65	153.26	104.54								
	4W Unbundled HDSL Loop including manual service inquiry and facility reservation-Zone 3		3	UHL	UHL4X	17.34	153.26	104.54								
	4W Unbundled HDSL Loop w/o manual service inquiry and facility reservation-Zone 1		1	UHL	UHL4W	16.24	129.00	92.20								
	4W Unbundled HDSL Loop w/o manual service inquiry and facility reservation-Zone 2		2	UHL	UHL4W	16.65	129.00	92.20								
	4W Unbundled HDSL Loop w/o manual service inquiry and facility reservation-Zone 3		3	UHL	UHL4W	17.34	129.00	92.20								
	CLEC to CLEC Conversion Charge w/o outside dispatch			UHL	UREWO		86.00	40.34								
4-WIRE DS1 DIGITAL LOOP																
	4W DS1 Digital Loop-Zone 1		1	USL	USLXX	85.70	245.16	152.98								
	4W DS1 Digital Loop-Zone 2		2	USL	USLXX	194.96	245.16	152.98								
	4W DS1 Digital Loop-Zone 3		3	USL	USLXX	491.94	245.16	152.98								

UNBUNDLED NETWORK ELEMENTS - Louisiana														Attachment: 2 Exh A			
CATEGORY		RATE ELEMENTS	Interim	Zone	BCS	USOC	RATES($)					Svc Order Submitted Elec per LSR	Svc Order Submitted Manually per LSR	Incremental Charge - Manual Svc Order vs. Electronic-1st	Incremental Charge - Manual Svc Order vs. Electronic-Add'l	Incremental Charge - Manual Svc Order vs. Electronic-Disc 1st	Incremental Charge - Manual Svc Order vs. Electronic-Disc Add'l
								Nonrecurring		NRC Disconnect		OSS Rates($)					
							Rec	First	Add'l	First	Add'l	SOMEC	SOMAN	SOMAN	SOMAN	SOMAN	SOMAN
		Switch-As-Is Conversion rate per UNE Loop, Single LSR, (per DS1)			USL	URESL		24.98	3.52								
		Switch-As-Is Conversion rate per UNE Loop, Spreadsheet, (per DS1)			USL	URESP		26.47	5.01								
		CLEC to CLEC Conversion Charge w/o outside dispatch			USL	UREWO		100.93	42.98								
	4-WIRE 19.2, 56 OR 64 KBPS DIGITAL GRADE LOOP																
		4 Wire Unbundled Digital Loop 2.4 Kbps-Zone 1		1	UDL	UDL2X	30.99	121.86	85.48								
		4 Wire Unbundled Digital Loop 2.4 Kbps-Zone 2		2	UDL	UDL2X	36.78	121.86	85.48								
		4 Wire Unbundled Digital Loop 2.4 Kbps-Zone3		3	UDL	UDL2X	38.92	121.86	85.48								
		4 Wire Unbundled Digital Loop 4.8 Kbps -Zone 1		1	UDL	UDL4X	30.99	121.86	85.48								
		4 Wire Unbundled Digital Loop 4.8 Kbps-Zone 2		2	UDL	UDL4X	36.78	121.86	85.48								
		4 Wire Unbundled Digital Loop 4.8 Kbps-Zone 3		3	UDL	UDL4X	38.92	121.86	85.48								
		4 Wire Unbundled Digital Loop 9.6 Kbps-Zone 1		1	UDL	UDL9X	30.99	121.86	85.48								
		5 Wire Unbundled Digital Loop 9.6 Kbps-Zone 2		2	UDL	UDL9X	36.78	121.86	85.48								
		6 Wire Unbundled Digital Loop 9.6 Kbps-Zone 3		3	UDL	UDL9X	38.92	121.86	85.48								
		4 Wire Unbundled Digital 19.2 Kbps-Zone 1		1	UDL	UDL19	30.99	121.86	85.48								
		4 Wire Unbundled Digital 19.2 Kbps-Zone 2		2	UDL	UDL19	36.78	121.86	85.48								
		4 Wire Unbundled Digital 19.2 Kbps-Zone 3		3	UDL	UDL19	38.92	121.86	85.48								
		4 Wire Unbundled Digital Loop 56 Kbps-Zone 1		1	UDL	UDL56	30.99	121.86	85.48								
		4 Wire Unbundled Digital Loop 56 Kbps-Zone 2		2	UDL	UDL56	36.78	121.86	85.48								
		4 Wire Unbundled Digital Loop 56 Kbps-Zone 3		3	UDL	UDL56	38.92	121.86	85.48								
		4 Wire Unbundled Digital Loop 64 Kbps-Zone 1		1	UDL	UDL64	30.99	121.86	85.48								
		4 Wire Unbundled Digital Loop 64 Kbps-Zone 2		2	UDL	UDL64	36.78	121.86	85.48								
		4 Wire Unbundled Digital Loop 64 Kbps-Zone 3		3	UDL	UDL64	38.92	121.86	85.48								
		Switch-As-Is Conversion rate per UNE Loop, Single LSR, (per DS0)			UDL	URESL		24.98	3.52								
		Switch-As-Is Conversion rate per UNE Loop, Spreadsheet, (per DS0)			UDL	URESP		26.47	5.01								
		CLEC to CLEC Conversion Charge w/o outside dispatch			UDL	UREWO		101.97	49.67								
	2-WIRE Unbundled COPPER LOOP																
		2W Unbundled Copper Loop-Designed including manual service inquiry & facility reservation-Zone 1		1	UCL	UCLPB	12.29	116.18	67.46								
		2W Unbundled Copper Loop-Designed including manual service inquiry & facility reservation-Zone 2		2	UCL	UCLPB	14.09	116.18	67.46								
		2W Unbundled Copper Loop-Designed including manual service inquiry & facility reservation-Zone 3		3	UCL	UCLPB	15.75	116.18	67.46								
		2W Unbundled Copper Loop-Designed w/o manual service inquiry and facility reservation-Zone 1		1	UCL	UCLPW	12.29	91.92	55.12								
		2W Unbundled Copper Loop-Designed w/o manual service inquiry and facility reservation-Zone 2		2	UCL	UCLPW	14.09	91.92	55.12								
		2W Unbundled Copper Loop-Designed w/o manual service inquiry and facility reservation-Zone 3		3	UCL	UCLPW	15.75	91.92	55.12								
		Order Coordination for Unbundled Copper Loops (per loop)			UCL	UCLMC		7.92	7.92								
		CLEC to CLEC Conversion Charge w/o outside dispatch (UCL-Des)			UCL	UREWO		91.92	42.47								
	4-WIRE COPPER LOOP																
		4W Copper Loop-Designed including manual service inquiry and facility reservation-Zone 1		1	UCL	UCL4S	22.27	139.69	90.96								
		4W Copper Loop-Designed including manual service inquiry and facility reservation-Zone 2		2	UCL	UCL4S	18.95	139.69	90.96								
		4W Copper Loop-Designed including manual service inquiry and facility reservation-Zone 3		3	UCL	UCL4S	10.99	139.69	90.96								
		4W Copper Loop-Designed w/o manual service inquiry and facility reservation-Zone 1		1	UCL	UCL4W	22.27	115.43	78.63								
		4W Copper Loop-Designed w/o manual service inquiry and facility reservation-Zone 2		2	UCL	UCL4W	18.95	115.43	78.63								
		4W Copper Loop-Designed w/o manual service inquiry and facility reservation-Zone 3		3	UCL	UCL4W	10.99	115.43	78.63								
		Order Coordination for Unbundled Copper Loops (per loop)			UCL	UCLMC		7.92	7.92								
		CLEC to CLEC Conversion Charge w/o outside dispatch (UCL-Des)			UCL	UREWO		91.92	42.47								
		Order Coordination for Specified Conversion Time (per LSR)			UEA, UDN, UAL, UHL, UDL, USL	OCOSL		17.56									
	Rearrangements																
		EEL to UNE-L Retermination, per 2W Unbundled Voice Loop-SL2			UEA	UREEL		87.59	36.30								

CATEGORY	RATE ELEMENTS	Interim	Zone	BCS	USOC	RATES($)					Svc Order Submitted Elec per LSR	Svc Order Submitted Manually per LSR	Incremental Charge - Manual Svc Order vs. Electronic-1st	Incremental Charge - Manual Svc Order vs. Electronic-Add'l	Incremental Charge - Manual Svc Order vs. Electronic-Disc 1st	Incremental Charge - Manual Svc Order vs. Electronic-Disc Add'l
							Nonrecurring		NRC Disconnect		OSS Rates($)					
						Rec	First	Add'l	First	Add'l	SOMEC	SOMAN	SOMAN	SOMAN	SOMAN	SOMAN
	EEL to UNE-L Retermination, per 4 Wire Unbundled Voice Loop			UEA	UREEL		87.59	36.30								
	EEL to UNE-L Retermination, per 2W ISDN Loop			UDN	UREEL		91.49	44.09								
	EEL to UNE-L Retermination, per 4 Wire Unbundled Digital Loop			UDL	UREEL		101.97	49.67								
	EEL to UNE-L Retermination, per 4 Wire Unbundled DS1 Loop			USL	UREEL		100.93	42.98								
UNE LOOP COMMINGLING																
2-WIRE ANALOG VOICE GRADE LOOP - COMMINGLING																
	2W Analog VG Loop- SL2 w/Loop or Ground Start Signaling-Zone 1		1	NTCVG	UEAL2	14.93	102.10	65.72								
	2W Analog VG Loop- SL2 w/Loop or Ground Start Signaling-Zone 2		2	NTCVG	UEAL2	25.35	102.10	65.72								
	2W Analog VG Loop- SL2 w/Loop or Ground Start Signaling-Zone 3		3	NTCVG	UEAL2	50.46	102.10	65.72								
	2W Analog VG Loop- SL2 w/Reverse Battery Signaling-Zone 1		1	NTCVG	UEAR2	14.93	102.10	65.72								
	2W Analog VG Loop- SL2 w/Reverse Battery Signaling-Zone 2		2	NTCVG	UEAR2	25.35	102.10	65.72								
	2W Analog VG Loop- SL2 w/Reverse Battery Signaling-Zone 3		3	NTCVG	UEAR2	50.46	102.10	65.72								
	Switch-As-Is Conversion rate per UNE Loop, Single LSR, (per DS0)			NTCVG	URESL		24.98	3.52								
	Switch-As-Is Conversion rate per UNE Loop, Spreadsheet, (per DS0)			NTCVG	URESP		26.47	5.01								
	CLEC to CLEC Conversion Charge w/o outside dispatch			NTCVG	UREWO		87.59	36.30								
	Loop Tagging-SL2 (SL2)			NTCVG	URETL		11.20	1.10								
4-WIRE ANALOG VOICE GRADE LOOP																
	4W Analog VG Loop-Zone 1		1	NTCVG	UEAL4	30.81	127.40	91.02	0.00	0.00						
	4W Analog VG Loop-Zone 2		2	NTCVG	UEAL4	38.32	127.40	91.02	0.00	0.00						
	4W Analog VG Loop-Zone 3		3	NTCVG	UEAL4	60.39	127.40	91.02	0.00	0.00						
	Switch-As-Is Conversion rate per UNE Loop, Single LSR, (per DS0)			NTCVG	URESL		24.98	3.52								
	Switch-As-Is Conversion rate per UNE Loop, Spreadsheet, (per DS0)			NTCVG	URESP		26.47	5.01								
	CLEC to CLEC Conversion Charge w/o outside dispatch			NTCVG	UREWO		87.59	36.30								
4-WIRE DS1 DIGITAL LOOP																
	4W DS1 Digital Loop-Zone 1		1	NTCD1	USLXX	85.70	245.16	152.98								
	4W DS1 Digital Loop-Zone 2		2	NTCD1	USLXX	194.96	245.16	152.98								
	4W DS1 Digital Loop-Zone 3		3	NTCD1	USLXX	491.94	245.16	152.98								
	Switch-As-Is Conversion rate per UNE Loop, Single LSR, (per DS1)			NTCD1	URESL		24.98	3.52								
	Switch-As-Is Conversion rate per UNE Loop, Spreadsheet, (per DS1)			NTCD1	URESP		26.47	5.01								
	CLEC to CLEC Conversion Charge w/o outside dispatch			NTCD1	UREWO		100.93	42.98								
4-WIRE 19.2, 56 OR 64 KBPS DIGITAL GRADE LOOP																
	4 Wire Unbundled Digital Loop 2.4 Kbps-Zone 1		1	NTCUD	UDL2X	30.99	121.86	85.48								
	4 Wire Unbundled Digital Loop 2.4 Kbps-Zone 2		2	NTCUD	UDL2X	36.78	121.86	85.48								
	4 Wire Unbundled Digital Loop 2.4 Kbps-Zone3		3	NTCUD	UDL2X	38.92	121.86	85.48								
	4 Wire Unbundled Digital Loop 4.8 Kbps -Zone 1		1	NTCUD	UDL4X	30.99	121.86	85.48								
	4 Wire Unbundled Digital Loop 4.8 Kbps-Zone 2		2	NTCUD	UDL4X	36.78	121.86	85.48								
	4 Wire Unbundled Digital Loop 4.8 Kbps-Zone 3		3	NTCUD	UDL4X	38.92	121.86	85.48								
	4 Wire Unbundled Digital Loop 9.6 Kbps-Zone 1		1	NTCUD	UDL9X	30.99	121.86	85.48								
	5 Wire Unbundled Digital Loop 9.6 Kbps-Zone 2		2	NTCUD	UDL9X	36.78	121.86	85.48								
	6 Wire Unbundled Digital Loop 9.6 Kbps-Zone 3		3	NTCUD	UDL9X	38.92	121.86	85.48								
	4 Wire Unbundled Digital 19.2 Kbps-Zone 1		1	NTCUD	UDL19	30.99	121.86	85.48								
	4 Wire Unbundled Digital 19.2 Kbps-Zone 2		2	NTCUD	UDL19	36.78	121.86	85.48								
	4 Wire Unbundled Digital 19.2 Kbps-Zone 3		3	NTCUD	UDL19	38.92	121.86	85.48								
	4 Wire Unbundled Digital Loop 56 Kbps-Zone 1		1	NTCUD	UDL56	30.99	121.86	85.48								
	4 Wire Unbundled Digital Loop 56 Kbps-Zone 2		2	NTCUD	UDL56	36.78	121.86	85.48								
	4 Wire Unbundled Digital Loop 56 Kbps-Zone 3		3	NTCUD	UDL56	38.92	121.86	85.48								
	4 Wire Unbundled Digital Loop 64 Kbps-Zone 1		1	NTCUD	UDL64	30.99	121.86	85.48								
	4 Wire Unbundled Digital Loop 64 Kbps-Zone 2		2	NTCUD	UDL64	36.78	121.86	85.48								
	4 Wire Unbundled Digital Loop 64 Kbps-Zone 3		3	NTCUD	UDL64	38.92	121.86	85.48								
	Switch-As-Is Conversion rate per UNE Loop, Single LSR, (per DS0)			NTCUD	URESL		24.98	3.52								
	Switch-As-Is Conversion rate per UNE Loop, Spreadsheet, (per DS0)			NTCUD	URESP		26.47	5.01								
	CLEC to CLEC Conversion Charge w/o outside dispatch			NTCUD	UREWO		101.97	49.67								
	Order Coordination for Specified Conversion Time (per LSR)			NTCVG, NTCUD, NTCD1	OCOSL		17.56									
UNBUNDLED EXCHANGE ACCESS LOOP																
2-WIRE ANALOG VOICE GRADE LOOP																
	2W Analog VG Loop- Service Level 1- Zone 1		1	UEANL	UEAL2	12.90	36.54	16.87								
	2W Analog VG Loop- Service Level 1- Zone 2		2	UEANL	UEAL2	23.33	36.54	16.87								
	2W Analog VG Loop- Service Level 1- Zone 3		3	UEANL	UEAL2	48.43	36.54	16.87								

UNBUNDLED NETWORK ELEMENTS - Louisiana														Attachment: 2 Exh A			
CATEGORY		RATE ELEMENTS	Interim	Zone	BCS	USOC	RATES($)					Svc Order Submitted Elec per LSR	Svc Order Submitted Manually per LSR	Incremental Charge - Manual Svc Order vs. Electronic-1st	Incremental Charge - Manual Svc Order vs. Electronic-Add'l	Incremental Charge - Manual Svc Order vs. Electronic-Disc 1st	Incremental Charge - Manual Svc Order vs. Electronic-Disc Add'l
								Nonrecurring		NRC Disconnect		OSS Rates($)					
							Rec	First	Add'l	First	Add'l	SOMEC	SOMAN	SOMAN	SOMAN	SOMAN	SOMAN
		2W Analog VG Loop- Service Level 1- Zone 1		1	UEANL	UEASL	12.90	36.54	16.87								
		2W Analog VG Loop- Service Level 1- Zone 2		2	UEANL	UEASL	23.33	36.54	16.87								
		2W Analog VG Loop- Service Level 1- Zone 3		3	UEANL	UEASL	48.43	36.54	16.87								
		Tag Loop at End User Premise			UEANL	URETL		8.92	0.88								
		Loop Testing-Basic 1st Half Hour			UEANL	URET1		33.17	0.00								
		Loop Testing-Basic Additional Half Hour			UEANL	URETA		19.28	19.28								
		Manual Order Coordination for UVL-SL1s (per loop)			UEANL	UEAMC		7.92	7.92								
		Order Coordination for Specified Conversion Time for UVL-SL1 (per LSR)			UEANL	OCOSL		17.56	17.56								
		Unbundled Non-Design Voice Loop, billing for BST providing make-up (Engineering Information-E.I.)			UEANL	UEANM		13.04	13.04								
		CLEC to CLEC Conversion Charge w/o Outside Dispatch (UVL-SL1)			UEANL	UREWO		15.75	8.93								
	2-WIRE Unbundled COPPER LOOP																
		2W Unbundled Copper Loop-Non-Designed Zone 1	I	1	UEQ	UEQ2X	12.40	35.27	15.60								
		2W Unbundled Copper Loop-Non-Designed-Zone 2	I	2	UEQ	UEQ2X	14.32	35.27	15.60								
		2W Unbundled Copper Loop-Non-Designed-Zone 3	I	3	UEQ	UEQ2X	16.87	35.27	15.60								
		Unbundled Misc Rate Element, Tag Loop at End User Premise			UEQ	URETL		8.92	0.88								
		Loop Testing-Basic 1st Half Hour			UEQ	URET1		33.17	0.00								
		Loop Testing-Basic Additional Half Hour			UEQ	URETA		19.28	19.28								
		Manual Order Coordination 2W Unbundled Copper Loop-Non-Designed (per loop)			UEQ	USBMC		7.92	7.92								
		Unbundled Copper Loop-Non-Design, billing for BST providing make-up (Engineering Information-E.I.)			UEQ	UEQMU		13.04	13.04								
		CLEC to CLEC Conversion Charge w/o Outside Dispatch (UCL-ND)			UEQ	UREWO		14.25	7.42								
LOOP MODIFICATION																	
		Unbundled Loop Modification, Removal of Load Coils-2W pair less than or equal to 18k ft, per Unbundled Loop			UAL, UHL, UCL, UEQ, ULS, UEA, UEANL, UEPSR, UEPSB	ULM2L		0.00	0.00								
		Unbundled Loop Modification Removal of Load Coils-4 Wire less than or equal to 18K ft, per Unbundled Loop			UHL, UCL, UEA	ULM4L		0.00	0.00								
		Unbundled Loop Modification Removal of Bridged Tap Removal, per unbundled loop			UAL, UHL, UCL, UEQ, ULS, UEA, UEANL, UEPSR, UEPSB	ULMBT		12.15	12.15								
SUB-LOOPS																	
	Sub-Loop Distribution																
		Sub-Loop-Per Cross Box Location-CLEC Feeder Facility Set-Up			UEANL, UEF	USBSA		144.09	144.09								
		Sub-Loop-Per Cross Box Location-Per 25 Pair Panel Set-Up			UEANL, UEF	USBSB		10.99	10.99								
		Sub-Loop-Per Building Equipment Room-CLEC Feeder Facility Set-Up			UEANL	USBSC		86.16	86.16								
		Sub-Loop-Per Building Equipment Room-Per 25 Pair Panel Set-Up			UEANL	USBSD		27.13	27.13								
		Sub-Loop Distribution Per 2W Analog VG Loop-Zone 1		1	UEANL	USBN2	7.57	63.89	30.06								
		Sub-Loop Distribution Per 2W Analog VG Loop-Zone 2		2	UEANL	USBN2	12.75	63.89	30.06								
		Sub-Loop Distribution Per 2W Analog VG Loop-Zone 3		3	UEANL	USBN2	21.45	63.89	30.06								
		Order Coordination for Unbundled Sub-Loops, per sub-loop pair			UEANL	USBMC		7.92	7.92								
		Sub-Loop Distribution Per 4W Analog VG Loop -Zone 1		1	UEANL	USBN4	11.76	76.75	42.92								
		Sub-Loop Distribution Per 4W Analog VG Loop -Zone 2		2	UEANL	USBN4	16.84	76.75	42.92								
		Sub-Loop Distribution Per 4W Analog VG Loop -Zone 3		3	UEANL	USBN4	19.27	76.75	42.92								
		Order Coordination for Unbundled Sub-Loops, per sub-loop pair			UEANL	USBMC		7.92	7.92								
		Sub-Loop 2W Intrabuilding Network Cable (INC)			UEANL	USBR2	2.91	51.48	17.65								
		Order Coordination for Unbundled Sub-Loops, per sub-loop pair			UEANL	USBMC		7.92	7.92								
		Sub-Loop 4W Intrabuilding Network Cable (INC)			UEANL	USBR4	6.58	57.54	23.71								
		Order Coordination for Unbundled Sub-Loops, per sub-loop pair			UEANL	USBMC		7.92	7.92								
		Loop Testing-Basic 1st Half Hour			UEANL	URET1		33.17	0.00								
		Loop Testing-Basic Additional Half Hour			UEANL	URETA		19.28	19.28								
		2W Copper Unbundled Sub-Loop Distribution-Zone 1		1	UEF	UCS2X	6.26	63.89	30.06								
		2W Copper Unbundled Sub-Loop Distribution-Zone 2		2	UEF	UCS2X	10.07	63.89	30.06								
		2W Copper Unbundled Sub-Loop Distribution-Zone 3		3	UEF	UCS2X	12.70	63.89	30.06								

UNBUNDLED NETWORK ELEMENTS - Louisiana														Attachment: 2 Exh A			
CATEGORY		RATE ELEMENTS	Interim	Zone	BCS	USOC	RATES($)					Svc Order Submitted Elec per LSR	Svc Order Submitted Manually per LSR	Incremental Charge - Manual Svc Order vs. Electronic-1st	Incremental Charge - Manual Svc Order vs. Electronic-Add'l	Incremental Charge - Manual Svc Order vs. Electronic-Disc 1st	Incremental Charge - Manual Svc Order vs. Electronic-Disc Add'l
								Nonrecurring		NRC Disconnect		OSS Rates($)					
							Rec	First	Add'l	First	Add'l	SOMEC	SOMAN	SOMAN	SOMAN	SOMAN	SOMAN
		Order Coordination for Unbundled Sub-Loops, per sub-loop pair			UEF	USBMC		7.92	7.92								
		4 Wire Copper Unbundled Sub-Loop Distribution-Zone 1		1	UEF	UCS4X	8.03	76.75	42.92								
		4 Wire Copper Unbundled Sub-Loop Distribution-Zone 2		2	UEF	UCS4X	10.71	76.75	42.92								
		4 Wire Copper Unbundled Sub-Loop Distribution-Zone 3		3	UEF	UCS4X	6.08	76.75	42.92								
		Order Coordination for Unbundled Sub-Loops, per sub-loop pair			UEF	USBMC		7.92	7.92								
		Loop Tagging Service Level 1, Unbundled Copper Loop, Non-Designed and Distribution Subloops			UEF, UEANL	URETL		8.92	0.88								
		Loop Testing-Basic 1st Half Hour			UEF	URET1		33.17	0.00								
		Loop Testing-Basic Additional Half Hour			UEF	URETA		19.28	19.28								
	Unbundled Sub-Loop Modification																
		Unbundled Sub-Loop Modification-2-W Copper Dist Load Coil/Equip Removal per 2-W PR			UEF	ULM2X		0.00	0.00								
		Unbundled Sub-loop Modification-4-W Copper Dist Load Coil/Equip Removal per 4-W PR			UEF	ULM4X		0.00	0.00								
		Unbundled Loop Modification, Removal of Bridge Tap, per unbundled loop			UEF	ULMBT		224.55	4.29								
	Unbundled Network Terminating Wire (UNTW)																
		Unbundled Network Terminating Wire (UNTW) per Pair			UENTW	UENPP	0.3454	14.72	14.72								
	Network Interface Device (NID)																
		Network Interface Device (NID)-1-2 lines			UENTW	UND12		42.26	27.83								
		Network Interface Device (NID)-1-6 lines			UENTW	UND16		62.86	48.43								
		Network Interface Device Cross Connect-2 W			UENTW	UNDC2		5.73	5.73								
		Network Interface Device Cross Connect-4W			UENTW	UNDC4		5.73	5.73								
UNE OTHER, PROVISIONING ONLY - NO RATE																	
		Unbundled Contact Name, Provisioning Only-no rate			UAL, UCL, UDC, UDL, UDN, UEA, UHL, UEANL, UEF, UEQ, UENTW, NTCVG, NTCUD, NTCD1, USL	UNECN	0.00	0.00									
		Unbundled DS1 Loop-Superframe Format Option-no rate			USL, NTCD1	CCOSF	0.00	0.00									
		Unbundled DS1 Loop-Expanded Superframe Format option-no rate			USL, NTCD1	CCOEF	0.00	0.00									
		NID-Dispatch and Service Order for NID installation			UENTW	UNDBX	0.00	0.00									
		UNTW Circuit Establishment, Provisioning Only-No Rate			UENTW	UENCE	0.00	0.00									
LOOP MAKE-UP																	
		Loop Makeup-Preordering w/o Reservation, per working or spare facility queried (Manual).			UMK	UMKLW		23.29	23.29								
		Loop Makeup-Preordering With Reservation, per spare facility queried (Manual).			UMK	UMKLP		24.70	24.70								
		Loop Makeup--With or w/o Reservation, per working or spare facility queried (Mechanized)			UMK	UMKMQ		0.19	0.19								
LINE SPLITTING																	
	END USER ORDERING-CENTRAL OFFICE BASED																
		Line Splitting-per line activation DLEC owned splitter			UEPSR UEPSB	UREOS	0.61										
		Line Splitting-per line activation BST owned-physical			UEPSR UEPSB	UREBP	0.61	17.97	10.29								
		Line Splitting-per line activation BST owned-virtual			UEPSR UEPSB	UREBV	0.61	17.97	10.29								
	UNBUNDLED EXCHANGE ACCESS LOOP																
	2-WIRE ANALOG VOICE GRADE LOOP																
		2W Analog VG Loop-Service Level 1-Line Splitting- Zone 1		1	UEPSR UEPSB	UEALS	12.90	36.54	16.87	0.00	0.00						
		2W Analog VG Loop-Service Level 1-Line Splitting- Zone 1		1	UEPSR UEPSB	UEABS	12.90	36.54	16.87	0.00	0.00						
		2W Analog VG Loop- Service Level 1-Line Splitting-Zone 2		2	UEPSR UEPSB	UEALS	23.33	36.54	16.87	0.00	0.00						
		2W Analog VG Loop- Service Level 1-Line Splitting-Zone 2		2	UEPSR UEPSB	UEABS	23.33	36.54	16.87	0.00	0.00						
		2W Analog VG Loop-Service Level 1-Line Splitting-Zone 3		3	UEPSR UEPSB	UEALS	48.43	36.54	16.87	0.00	0.00						
		2W Analog VG Loop-Service Level 1-Line Splitting-Zone 3		3	UEPSR UEPSB	UEABS	48.43	36.54	16.87	0.00	0.00						
	PHYSICAL COLLOCATION																
		Physical Collocation-2W Cross Connects (Loop) for Line Splitting			UEPSR UEPSB	PE1LS	0.0318	11.94	11.46	0.00	0.00						
	VIRTUAL COLLOCATION																
		Virtual Collocation-2W Cross Connects (Loop) for Line Splitting			UEPSR UEPSB	VE1LS	0.0296	11.94	11.46	0.00	0.00						
UNBUNDLED DEDICATED TRANSPORT																	

CATEGORY	RATE ELEMENTS	Interim	Zone	BCS	USOC	RATES($)					Svc Order Submitted Elec per LSR	Svc Order Submitted Manually per LSR	Incremental Charge - Manual Svc Order vs. Electronic-1st	Incremental Charge - Manual Svc Order vs. Electronic-Add'l	Incremental Charge - Manual Svc Order vs. Electronic-Disc 1st	Incremental Charge - Manual Svc Order vs. Electronic-Disc Add'l
							Nonrecurring		NRC Disconnect		OSS Rates($)					
						Rec	First	Add'l	First	Add'l	SOMEC	SOMAN	SOMAN	SOMAN	SOMAN	SOMAN
	INTEROFFICE CHANNEL - DEDICATED TRANSPORT															
	Interoffice Channel-2W VG-per mile			U1TVX	1L5XX	0.013										
	Interoffice Channel-2W VG-Facility Termination			U1TVX	U1TV2	22.60	39.36	26.62								
	Interoffice Channel-2W VG Rev Bat.-per mile			U1TVX	1L5XX	0.013										
	Interoffice Channel-2W VG Rev Bat.-Facility Termination			U1TVX	U1TR2	22.60	39.36	26.62								
	Interoffice Channel-4W VG-per mile			U1TVX	1L5XX	0.013										
	Interoffice Channel-4- Wire VG-Facility Termination			U1TVX	U1TV4	19.81	39.36	26.62								
	Interoffice Channel-56 kbps-per mile			U1TDX	1L5XX	0.013										
	Interoffice Channel-56 kbps-Facility Termination			U1TDX	U1TD5	15.61	39.36	26.62								
	Interoffice Channel-64 kbps-per mile			U1TDX	1L5XX	0.013										
	Interoffice Channel-64 kbps-Facility Termination			U1TDX	U1TD6	15.61	39.36	26.62								
	Interoffice Channel-DS1-per mile			U1TD1	1L5XX	0.2652										
	Interoffice Channel-DS1-Facility Termination			U1TD1	U1TF1	70.47	86.69	79.44								
	Interoffice Channel-DS3-per mile			U1TD3	1L5XX	6.04										
	Interoffice Channel-DS3-Facility Termination			U1TD3	U1TF3	850.45	270.69	158.05								
	Interoffice Channel-STS-1-per mile			U1TS1	1L5XX	6.04										
	Interoffice Channel-STS-1-Facility Termination			U1TS1	U1TFS	830.19	270.69	158.05								
	Local Channel-Dedicated-2W VG			ULDVX, UNCVX	ULDV2	21.07										
	Local Channel-Dedicated-2W VG Rev Bat			ULDVX	ULDR2	21.07										
	Local Channel-Dedicated-4W VG			ULDVX, UNCVX	ULDV4	22.32										
	Local Channel-Dedicated-DS1-Zone 1		1	ULDD1, UNC1X	ULDF1	45.06										
	Local Channel-Dedicated-DS1 -Zone 2		2	ULDD1, UNC1X	ULDF1	139.82										
	Local Channel-Dedicated-DS1 -Zone 3		3	ULDD1, UNC1X	ULDF1	80.52										
	Local Channel-Dedicated-DS3-Per Mile per month			ULDD3, UNC3X	1L5NC	8.99										
	Local Channel-Dedicated-DS3-Facility Termination			ULDD3, UNC3X	ULDF3	539.86										
	Local Channel-Dedicated-STS-1- Per Mile per month			ULDS1, UNCSX	1L5NC	8.99										
	Local Channel-Dedicated-STS-1 -Facility Termination			ULDS1, UNCSX	ULDFS	525.80										
	UNBUNDLED DARK FIBER															
	Dark Fiber-Interoffice Transport, Per Four Fiber Strands, Per Route Mile Or Fraction Thereof			UDF, UDFCX	1L5DF	25.28										
	Dark Fiber-Interoffice Transport, Per Four Fiber Strands, Per Route Mile Or Fraction Thereof			UDF, UDFCX	UDF14		620.60	133.88								
DARK FIBER																
	Dark Fiber, Four Fiber Strands, Per Route Mile or Fraction Thereof per month-Local Channel			UDF, UDFCX	1L5DC	60.06										
	Dark Fiber, Four Fiber Strands, Per Route Mile or Fraction Thereof per month-Local Loop			UDF, UDFCX	1L5DL	60.06										
8XX ACCESS TEN DIGIT SCREENING																
	8XX Access Ten Digit Screening, Per Call					0.0006387										
	8XX Access Ten Digit Screening, w/ 8XX No. Delivery, per query					0.0006387										
	8XX Access Ten Digit Screening, w/ POTS No. Delivery, per query					0.0006387										
LINE INFORMATION DATA BASE ACCESS (LIDB)																
	LIDB Common Transport Per Query					0.0000221										
	LIDB Validation Per Query					0.0135077										
	LIDB Originating Point Code Establishment or Change			OQU	NRBPX		33.33									
CALLING NAME (CNAM) SERVICE																
	CNAM for DB Owners, Per Query					0.0010217										
	CNAM for Non DB Owners, Per Query					0.0010217										
SELECTIVE ROUTING																
	Selective Routing Per Unique Line Class Code Per Request Per Switch						82.25	82.25								
AIN SELECTIVE CARRIER ROUTING																
	Regional Service Establishment						100,209.33									
	End Office Establishment						164.29	164.29								
	Query NRC, per query					0.0030293										
AIN - BELLSOUTH AIN SMS ACCESS SERVICE																
	AIN SMS Access Service-Service Establishment, Per State, Initial Setup			A1N	CAMSE		38.30	38.30								
	AIN SMS Access Service-Port Connection-Dial/Shared Access			A1N	CAMDP		7.60	7.60								

CATEGORY	RATE ELEMENTS	Interim	Zone	BCS	USOC	RATES($)					Svc Order Submitted Elec per LSR	Svc Order Submitted Manually per LSR	Incremental Charge - Manual Svc Order vs. Electronic-1st	Incremental Charge - Manual Svc Order vs. Electronic-Add'l	Incremental Charge - Manual Svc Order vs. Electronic-Disc 1st	Incremental Charge - Manual Svc Order vs. Electronic-Disc Add'l
							Nonrecurring		NRC Disconnect		OSS Rates($)					
						Rec	First	Add'l	First	Add'l	SOMEC	SOMAN	SOMAN	SOMAN	SOMAN	SOMAN
	AIN SMS Access Service-Port Connection-ISDN Access			A1N	CAM1P		7.60	7.60								
	AIN SMS Access Service-User Identification Codes-Per User ID Code			A1N	CAMAU		33.99	33.99								
	AIN SMS Access Service-Security Card, Per User ID Code, Initial or Replacement			A1N	CAMRC		41.39	41.39								
	AIN SMS Access Service-Storage, Per Unit (100 Kilobytes)					0.0022										
	AIN SMS Access Service-Session, Per Minute					0.5795										
	AIN SMS Access Service-Company Performed Session, Per Minute					0.8104										
HIGH CAPACITY UNBUNDLED LOCAL LOOP																
DS-3/STS-1 UNBUNDLED LOCAL LOOP - Stand Alone																
	DS3 Unbundled Local Loop-per mile			UE3	1L5ND	10.04										
	DS3 Unbundled Local Loop-Facility Termination			UE3	UE3PX	362.34	438.46	256.30								
	STS-1Unbundled Local Loop-per mile			UDLSX	1L5ND	10.04										
	STS-1 Unbundled Local Loop-Facility Termination			UDLSX	UDLS1	374.56	438.46	256.30								
ENHANCED EXTENDED LINK (EELs)																
Network Elements Used in Combinations																
	2W VG Loop (SL2) in Combination-Zone 1		1	UNCVX	UEAL2	14.93	94.21	45.09								
	2W VG Loop (SL2) in Combination-Zone 2		2	UNCVX	UEAL2	25.35	94.21	45.09								
	2W VG Loop (SL2) in Combination-Zone 3		3	UNCVX	UEAL2	50.46	94.21	45.09								
	4W Analog VG Loop in Combination -Zone 1		1	UNCVX	UEAL4	30.81	94.21	45.09								
	4W Analog VG Loop in Combination -Zone 2		2	UNCVX	UEAL4	38.32	94.21	45.09								
	4W Analog VG Loop in Combination -Zone 3		3	UNCVX	UEAL4	60.39	94.21	45.09								
	2W ISDN Loop in Combination-Zone 1		1	UNCNX	U1L2X	22.09	94.21	45.09								
	2W ISDN Loop in Combination-Zone 2		2	UNCNX	U1L2X	35.28	94.21	45.09								
	2W ISDN Loop in Combination-Zone 3		3	UNCNX	U1L2X	65.18	94.21	45.09								
	4W 56Kbps Digital Grade Loop in Combination-Zone 1		1	UNCDX	UDL56	30.99	94.21	45.09								
	4W 56Kbps Digital Grade Loop in Combination-Zone 2		2	UNCDX	UDL56	36.78	94.21	45.09								
	4W 56Kbps Digital Grade Loop in Combination-Zone 3		3	UNCDX	UDL56	38.92	94.21	45.09								
	4W 64Kbps Digital Grade Loop in Combination-Zone 1		1	UNCDX	UDL64	30.99	94.21	45.09								
	4W 64Kbps Digital Grade Loop in Combination-Zone 2		2	UNCDX	UDL64	36.78	94.21	45.09								
	4W 64Kbps Digital Grade Loop in Combination-Zone 3		3	UNCDX	UDL64	38.92	94.21	45.09								
	4W DS1 Digital Loop in Combination-Zone 1		1	UNC1X	USLXX	85.70	169.22	100.89								
	4W DS1 Digital Loop in Combination-Zone 2		2	UNC1X	USLXX	194.96	169.22	100.89								
	4W DS1 Digital Loop in Combination-Zone 3		3	UNC1X	USLXX	491.94	169.22	100.89								
	DS3 Local Loop in combination-per mile			UNC3X	1L5ND	10.04										
	DS3 Local Loop in combination-Facility Termination			UNC3X	UE3PX	362.34	188.45	125.51								
	STS-1 Local Loop in combination-per mile			UNCSX	1L5ND	10.04										
	STS-1 Local Loop in combination-Facility Termination			UNCSX	UDLS1	374.56	188.45	125.51								
	Interoffice Channel in combination-2W VG-per mile			UNCVX	1L5XX	0.013										
	Interoffice Channel in combination-2W VG-Facility Termination			UNCVX	U1TV2	22.60	72.60	41.75								
	Interoffice Channel in combination-4W VG-per mile			UNCVX	1L5XX	0.013										
	Interoffice Channel in combination-4W VG-Facility Termination			UNCVX	U1TV4	19.81	72.60	41.75								
	Interoffice Channel in combination-4W 56 kbps-per mile			UNCDX	1L5XX	0.013										
	Interoffice Channel in combination-4W 56 kbps-Facility Termination			UNCDX	U1TD5	15.61	72.60	41.75								
	Interoffice Channel in combination-4W 64 kbps-per mile			UNCDX	1L5XX	0.013										
	Interoffice Channel in combination-4W 64 kbps-Facility Termination			UNCDX	U1TD6	15.61	72.60	41.75								
	Interoffice Channel in combination-DS1-per mile			UNC1X	1L5XX	0.2652										
	Interoffice Channel in combination-DS1 Facility Termination			UNC1X	U1TF1	70.47	143.58	103.88								
	Interoffice Channel in combination-DS3-per mile			UNC3X	1L5XX	6.04										
	Interoffice Channel in combination-DS3-Facility Termination			UNC3X	U1TF3	850.45	296.68	121.16								
	Interoffice Channel in combination-STS-1-per mile			UNCSX	1L5XX	6.04										
	Interoffice Channel in combination-STS-1 Facility Termination			UNCSX	U1TFS	830.19	296.68	121.16								
ADDITIONAL NETWORK ELEMENTS																
Optional Features & Functions:																
	Clear Channel Capability Extended Frame Option-per DS1	I		U1TD1, ULDD1,UNC1X	CCOEF		0.00	0.00	0.00	0.00						
	Clear Channel Capability Super FrameOption-per DS1	I		U1TD1, ULDD1,UNC1X	CCOSF		0.00	0.00	0.00	0.00						
	Clear Channel Capability (SF/ESF) Option-Subsequent Activity-per DS1	I		ULDD1, U1TD1, UNC1X, USL	NRCCC		184.65	23.79	1.97	0.77						

UNBUNDLED NETWORK ELEMENTS - Louisiana														Attachment: 2 Exh A			
CATEGORY	RATE ELEMENTS	Interim	Zone	BCS	USOC	RATES($)					Svc Order Submitted Elec per LSR	Svc Order Submitted Manually per LSR	Incremental Charge - Manual Svc Order vs. Electronic-1st	Incremental Charge - Manual Svc Order vs. Electronic-Add'l	Incremental Charge - Manual Svc Order vs. Electronic-Disc 1st	Incremental Charge - Manual Svc Order vs. Electronic-Disc Add'l
							Nonrecurring		NRC Disconnect		OSS Rates($)					
						Rec	First	Add'l	First	Add'l	SOMEC	SOMAN	SOMAN	SOMAN	SOMAN	SOMAN
	C-bit Parity Option-Subsequent Activity-per DS3	i		U1TD3, ULDD3, UE3, UNC3X	NRCC3		218.78	7.66	0.7263	0.00						
	DS1/DS0 Channel System			UNC1X	MQ1	105.09	59.97	12.96								
	DS3/DS1Channel System			UNC3X, UNCSX	MQ3	201.48	107.05	48.07								
	VG COCI in combination			UNCVX	1D1VG	0.6497	5.91	4.26								
	VG COCI-for Stand Alone Local Loop			UEA	1D1VG	0.6497	5.91	4.26								
	VG COCI-for connection to a channelized DS1 Local Channel in the same SWC as collocation			U1TUC	1D1VG	0.6497	5.91	4.26								
	OCU-DP COCI (2.4-64kbs) in combination			UNCDX	1D1DD	1.38	5.91	4.26								
	OCU-DP COCI (2.4-64kbs)-for Stand Alone Local Loop			UDL	1D1DD	1.38	5.91	4.26								
	OCU-DP COCI (2.4-64kbs)-for connection to a channelized DS1 Local Channel in the same SWC as collocation			U1TUD	1D1DD	1.38	5.91	4.26								
	2W ISDN COCI (BRITE) in combination			UNCNX	UC1CA	2.96	6.39	4.58								
	2W ISDN COCI (BRITE)-for a Local Loop			UDN	UC1CA	2.96	6.39	4.58								
	2W ISDN COCI (BRITE)-for connection to a channelized DS1 Local Channel in the same SWC as collocation			U1TUB	UC1CA	2.96	6.39	4.58								
	DS1 COCI in combination			UNC1X	UC1D1	11.78	5.91	4.26								
	DS1 COCI-for Stand Alone Local Channel			ULDD1	UC1D1	11.78	5.91	4.26								
	DS1 COCI-for Stand Alone Interoffice Channel			U1TD1	UC1D1	11.78	5.91	4.26								
	DS1 COCI-for Stand Alone Local Loop			USL	UC1D1	11.78	5.91	4.26								
	DS1 COCI-for connection to a channelized DS1 Local Channel in the same SWC as collocation			U1TUA	UC1D1	11.78	5.91	4.26								
	Wholesale to UNE, Switch-As-Is Conversion Charge			UNCVX, U1TVX, UNCDX, U1TDX, UNC1X, U1TD1,UNC3X, U1TD3, UNCSX, U1TS1, UDF,UDFCX	UNCCC		5.43	5.43								
	Unbundled Misc Rate Element, SNE SAI, Single Network Element-Switch As Is Non-recurring Charge, per circuit (LSR)	I		U1TVX, U1TDX, U1TD1, U1TD3, U1TS1, UDF, UE3	URESL		36.83	16.12								
	Unbundled Misc Rate Element, SNE SAI, Single Network Element-Switch As Is Non-recurring Charge, incremental charge per circuit on a spreadsheet	i		U1TVX, U1TDX, U1TD1, U1TD3, U1TS1, UDF, UE3	URESP		1.49	1.49								
	UNE Reconfiguration Change Charge per Circuit	I		UNC1X	URERC		35.00	35.00								
	UNE Reconfiguration Change Charge per Circuit Project Managed	I		UNC1X	URERP		1.49	1.49								
Access to DCS - Customer Reconfiguration (FlexServ)																
	Customer Reconfiguration Establishment						1.43									
	DS1 DCS Termination with DS0 Switching					19.58	24.81	19.09								
	DS1 DCS Termination with DS1 Switching					10.95	17.93	12.22								
	DS3 DCS Termination with DS1 Switching					149.41	24.81	19.09								
Node (SynchroNet)																
	Node per month			UNCDX	UNCNT	15.43										
Service Rearrangements																
	NRC-Change in Facility Assignment per circuit Service Rearrangement	I		U1TVX, U1TDX, UEA, UDL, U1TUC, U1TUD, U1TUB, ULDVX, ULDDX, UNCVX, UNCDX, UNC1X	URETD		100.93	42.98								
	NRC-Change in Facility Assignment per circuit Project Management (added to CFA per circuit if project managed)	I		U1TVX, U1TDX, UEA, UDL, U1TUC, U1TUD, U1TUB, ULDVX, ULDDX, UNCVX, UNCDX, UNC1X	URETB		1.28	1.28								
	NRC-Order Coordination Specific Time-Dedicated Transport	I		UNC1X	OCOSR		18.85	18.85								
COMMINGLING																

CATEGORY	RATE ELEMENTS	Interim	Zone	BCS	USOC	RATES($)					Svc Order Submitted Elec per LSR	Svc Order Submitted Manually per LSR	Incremental Charge - Manual Svc Order vs. Electronic-1st	Incremental Charge - Manual Svc Order vs. Electronic-Add'l	Incremental Charge - Manual Svc Order vs. Electronic-Disc 1st	Incremental Charge - Manual Svc Order vs. Electronic-Disc Add'l
							Nonrecurring		NRC Disconnect		OSS Rates($)					
						Rec	First	Add'l	First	Add'l	SOMEC	SOMAN	SOMAN	SOMAN	SOMAN	SOMAN
	Commingling Authorization			UNCVX, UNCDX, UNC1X, UNC3X, UNCSX, U1TD1, U1TD3, U1TS1, UE3, UDLSX, U1TVX, U1TDX, U1TUB, ULDVX, ULDD1, ULDD3, ULDS1	CMGAU	0.00	0.00	0.00								
	Commingled (UNE part of single bandwidth circuit)															
	Commingled VG COCI			XDV2X, NTCVG	1D1VG	0.6497	5.91	4.26								
	Commingled Digital COCI			XDV6X, NTCUD	1D1DD	1.38	5.91	4.26								
	Commingled ISDN COCI			XDD4X	UC1CA	2.96	6.39	4.58								
	Commingled 2W VG Interoffice Channel			XDV2X	U1TV2	22.60	72.60	41.75								
	Commingled 4W VG Interoffice Channel			XDV6X	U1TV4	19.81	72.60	41.75								
	Commingled 56kbps Interoffice Channel			XDD4X	U1TD5	15.61	72.60	41.75								
	Commingled 64kbps Interoffice Channel			XDD4X	U1TD6	15.61	72.60	41.75								
	Commingled VG/DS0 Interoffice Channel Mileage			XDV2X, XDV6X, XDD4X	1L5XX	0.013										
	Commingled 2W Local Loop Zone 1		1	XDV2X	UEAL2	14.93	94.21	45.09								
	Commingled 2W Local Loop Zone 2		2	XDV2X	UEAL2	25.35	94.21	45.09								
	Commingled 2W Local Loop Zone 3		3	XDV2X	UEAL2	50.46	94.21	45.09								
	Commingled 4W Local Loop Zone 1		1	XDV6X	UEAL4	30.81	94.21	45.09								
	Commingled 4W Local Loop Zone 2		2	XDV6X	UEAL4	38.32	94.21	45.09								
	Commingled 4W Local Loop Zone 3		3	XDV6X	UEAL4	60.39	94.21	45.09								
	Commingled 56kbps Local Loop Zone 1		1	XDD4X	UDL56	30.99	94.21	45.09								
	Commingled 56kbps Local Loop Zone 2		2	XDD4X	UDL56	36.78	94.21	45.09								
	Commingled 56kbps Local Loop Zone 3		3	XDD4X	UDL56	38.92	94.21	45.09								
	Commingled 64kbps Local Loop Zone 1		1	XDD4X	UDL64	30.99	94.21	45.09								
	Commingled 64kbps Local Loop Zone 2		2	XDD4X	UDL64	36.78	94.21	45.09								
	Commingled 64kbps Local Loop Zone 3		3	XDD4X	UDL64	38.92	94.21	45.09								
	Commingled ISDN Local Loop Zone 1		1	XDD4X	U1L2X	22.09	94.21	45.09								
	Commingled ISDN Local Loop Zone 2		2	XDD4X	U1L2X	35.28	94.21	45.09								
	Commingled ISDN Local Loop Zone 3		3	XDD4X	U1L2X	65.18	94.21	45.09								
	Commingled DS1 COCI			XDH1X, NTCD1	UC1D1	11.78	5.91	4.26								
	Commingled DS1 Interoffice Channel			XDH1X	U1TF1	70.47	143.58	103.88								
	Commingled DS1 Interoffice Channel Mileage			XDH1X	1L5XX	0.2652										
	Commingled DS1/DS0 Channel System			XDH1X	MQ1	105.09	59.97	12.96								
	Commingled DS1 Local Loop Zone 1		1	XDH1X	USLXX	85.70	169.22	100.89								
	Commingled DS1 Local Loop Zone 2		2	XDH1X	USLXX	194.96	169.22	100.89								
	Commingled DS1 Local Loop Zone 3		3	XDH1X	USLXX	491.94	169.22	100.89								
	Commingled DS3 Local Loop			HFQC6	UE3PX	362.34	188.45	125.51								
	Commingled DS3/STS-1 Local Loop Mileage			HFQC6, HFRST	1L5ND	10.04										
	Commingled STS-1 Local Loop			HFRST	UDLS1	374.56	188.45	125.51								
	Commingled DS3/DS1 Channel System			HFQC6	MQ3	201.48	107.05	48.07								
	Commingled DS3 Interoffice Channel			HFQC6	U1TF3	850.45	296.68	121.16								
	Commingled DS3 Interoffice Channel Mileage			HFQC6	1L5XX	6.04										
	Commingled STS-1Interoffice Channel			HFRST	U1TFS	830.19	296.68	121.16								
	Commingled STS-1Interoffice Channel Mileage			HFRST	1L5XX	6.04										
	Commingled Dark Fiber-Interoffice Transport, Per Four Fiber Strands, Per Route Mile Or Fraction Thereof			HEQDL	1L5DF	25.28										
	Commingled Dark Fiber-Interoffice Transport, Per Four Fiber Strands, Per Route Mile Or Fraction Thereof			HEQDL	UDF14		620.60	133.88								
SIGNALING (CCS7)																
	NOTE:"bk" beside a rate indicates that the parties have agreed to bill and keep for that element pursuant to the terms and conditions in Attachment 3.															
	CCS7 Signaling Usage, Per TCAP Message					0.000064bk										
	CCS7 Signaling Usage, Per ISUP Message					0.000016bk										
LNP Query Service																
	LNP Charge Per query					0.0008559										

UNBUNDLED NETWORK ELEMENTS - Louisiana														Attachment: 2 Exh A			
CATEGORY		RATE ELEMENTS	Interim	Zone	BCS	USOC	RATES($)					Svc Order Submitted Elec per LSR	Svc Order Submitted Manually per LSR	Incremental Charge - Manual Svc Order vs. Electronic-1st	Incremental Charge - Manual Svc Order vs. Electronic-Add'l	Incremental Charge - Manual Svc Order vs. Electronic-Disc 1st	Incremental Charge - Manual Svc Order vs. Electronic-Disc Add'l
								Nonrecurring		NRC Disconnect				OSS Rates($)			
							Rec	First	Add'l	First	Add'l	SOMEC	SOMAN	SOMAN	SOMAN	SOMAN	SOMAN
		LNP Service Establishment Manual						12.16									
		LNP Service Provisioning with Point Code Establishment						576.33	294.43								
911 PBX LOCATE																	
	911 PBX LOCATE DATABASE CAPABILITY																
		Service Establishment per CLEC per End User Account			9PBDC	9PBEU		1,819.00									
		Changes to TN Range or Customer Profile			9PBDC	9PBTN		181.99									
		Per Telephone Number (Monthly)			9PBDC	9PBMM	0.07										
		Change Company (Service Provider) ID			9PBDC	9PBPC		534.22									
		PBX Locate Service Support per CLEC (Monthlt)			9PBDC	9PBMR	178.58										
		Service Order Charge			9PBDC	9PBSC		15.20									
	911 PBX LOCATE TRANSPORT COMPONENT																
	See Att 3																
	Note: Rates displaying an "I" in Interim column are interim as a result of a Commission order.																
UNBUNDLED LOCAL EXCHANGE SWITCHING(PORTS)																	
	The Exchange Switching Port Rates Reflected Here Apply to Embedded Base Switching Ports as of March 10, 2005 and Consist of the TELRIC Cost Based Rates Plus $1.00 in Accordance with the TRRO.																
	Exchange Ports																
	NOTE: Although the Port Rate includes all available features in GA, KY, LA & TN, the desired features will need to be ordered using retail USOCs																
	2-WIRE VOICE GRADE LINE PORT RATES (RES)																
		Exchange Ports-2W Analog Line Port- Res.			UEPSR	UEPRL	2.52	2.31	2.21								
		Exchange Ports-2W Analog Line Port with Caller ID-Res.			UEPSR	UEPRC	2.52	2.31	2.21								
		Exchange Ports-2W Analog Line Port outgoing only-Res.			UEPSR	UEPRO	2.52	2.31	2.21								
		Exchange Ports-2W VG unbundled LA extended local dialing parity Port with Caller ID-Res.			UEPSR	UEPAS	2.52	2.31	2.21								
		Exchange Ports-2W VG unbundled LA Area Plus with Caller ID-Res (RUL)			UEPSR	UEPAG	2.52	2.31	2.21								
		Exchange Ports-2W VG unbundled res, low usage line port with Caller ID (LUM)			UEPSR	UEPAP	2.52	2.31	2.21								
		Exchange Ports-2W VG LA Residence Dialing Plan w/o Caller ID			UEPSR	UEPWG	2.52	2.31	2.21								
		Exchange Ports-2W VG LA Residence Area Plus w/o Caller ID			UEPSR	UEPRQ	2.52	2.31	2.21								
		2W voice unbundled Low Usage Line Port w/o Caller ID Capability			UEPSR	UEPRT	2.52	2.31	2.21								
		Subsequent Activity			UEPSR	USASC	0.00	0.00	0.00								
	FEATURES																
		All Available Vertical Features			UEPSR	UEPVF	0.00	0.00	0.00								
	2-WIRE VOICE GRADE LINE PORT RATES (BUS)																
		Exchange Ports-2W Analog Line Port w/o Caller ID-Bus			UEPSB	UEPBL	2.52	2.31	2.21								
		Exchange Ports-2W VG unbundled Line Port with unbundled port with Caller+E484 ID-Bus.			UEPSB	UEPBC	2.52	2.31	2.21								
		Exchange Ports-2W Analog Line Port outgoing only-Bus.			UEPSB	UEPBO	2.52	2.31	2.21								
		Exchange Ports-2W VG unbundled LA extended local dialing parity Port with Caller ID-Bus.			UEPSB	UEPAX	2.52	2.31	2.21								
		Exhange Ports-2W VG unbundled incoming only port with Caller ID-Bus			UEPSB	UEPB1	2.52	2.31	2.21								
		Exchange Ports-2W VG unbundled LA Bus Area Calling Port with Caller ID-Bus (BUC)			UEPSB	UEPAA	2.52	2.31	2.21								
		Exchange Ports-2W Voice LA Business Dialing Plan w/o Caller ID			UEPSB	UEPWH	2.52	2.31	2.21								
		Exchange Ports-2W Voice LA Business Area Calling Port w/o Caller ID			UEPSB	UEPBA	2.52	2.31	2.21								
		2W voice unbundled Incoming Only Port w/o Caller ID Capability			UEPSB	UEPBE	2.52	2.31	2.21								
		Subsequent Activity			UEPSB	USASC	0.00	0.00	0.00								
	FEATURES																
		All Available Vertical Features			UEPSB	UEPVF	0.00	0.00	0.00								
	EXCHANGE PORT RATES (DID & PBX)																
		2W VG Unbundled 2-Way PBX Trunk-Res			UEPSE	UEPRD	2.52	30.37	14.42								
		2W VG Line Side Unbundled 2-Way PBX Trunk-Bus			UEPSP	UEPPC	2.52	30.37	14.42								
		2W VG Line Side Unbundled Outward PBX Trunk-Bus			UEPSP	UEPPO	2.52	30.37	14.42								
		2W VG Line Side Unbundled Incoming PBX Trunk-Bus			UEPSP	UEPP1	2.52	30.37	14.42								
		2W Analog Long Distance Terminal PBX Trunk-Bus			UEPSP	UEPLD	2.52	30.37	14.42								
		2W Voice Unbundled 2-Way PBX LA Calling Port			UEPSP	UEPL2	2.52	30.37	14.42								
		2W Voice Unbundled PBX LD Terminal Ports			UEPSP	UEPLD	2.52	30.37	14.42								

UNBUNDLED NETWORK ELEMENTS - Louisiana														Attachment: 2 Exh A			
CATEGORY	RATE ELEMENTS	Interim	Zone	BCS	USOC	RATES($)					Svc Order Submitted Elec per LSR	Svc Order Submitted Manually per LSR	Incremental Charge - Manual Svc Order vs. Electronic-1st	Incremental Charge - Manual Svc Order vs. Electronic-Add'l	Incremental Charge - Manual Svc Order vs. Electronic-Disc 1st	Incremental Charge - Manual Svc Order vs. Electronic-Disc Add'l
							Nonrecurring		NRC Disconnect		OSS Rates($)					
						Rec	First	Add'l	First	Add'l	SOMEC	SOMAN	SOMAN	SOMAN	SOMAN	SOMAN
	2W Vice Unbundled 2-Way PBX Usage Port			UEPSP	UEPXA	2.52	30.37	14.42								
	2W Voice Unbundled PBX Toll Terminal Hotel Ports			UEPSP	UEPXB	2.52	30.37	14.42								
	2W Voice Unbundled PBX LD DDD Terminals Port			UEPSP	UEPXC	2.52	30.37	14.42								
	2W Voice Unbundled PBX LD Terminal Switchboard Port			UEPSP	UEPXD	2.52	30.37	14.42								
	2W Voice Unbundled PBX LD Terminal Switchboard IDD Capable Port			UEPSP	UEPXE	2.52	30.37	14.42								
	2W Voice Unbundled 2-Way PBX LA Local Optional Callling Port			UEPSP	UEPXK	2.52	30.37	14.42								
	2W Voice Unbundled 2-Way PBX Hotel/Hospital Economy Administrative Calling Port			UEPSP	UEPXL	2.52	30.37	14.42								
	2W Voice Unbundled 2-Way PBX Hotel/Hospital Economy Rm Calling Port			UEPSP	UEPXM	2.52	30.37	14.42								
	2W Voice Unbundled 1-Way Outgoing PBX Hotel/Hospital Discount Rm Calling Port			UEPSP	UEPXO	2.52	30.37	14.42								
	2W Voice Unbundled 1-Way Outgoing PBX LA Local Discount Calling Port			UEPSP	UEPXP	2.52	30.37	14.42								
	2W Voice Unbundled 1-Way Outgoing PBX Measured Port			UEPSP	UEPXS	2.52	30.37	14.42								
	Subsequent Activity			UEPSP	USASC	0.00	0.00	0.00								
FEATURES																
	All Available Vertical Features			UEPSP UEPSE	UEPVF	0.00	0.00	0.00								
NOTE: Transmission/usage charges associated with POTS circuit switched usage will also apply to circuit switched voice and/or circuit switched data transmission by B-Channels associated with 2-wire ISDN ports.																
NOTE: Access to B Channel or D Channel Packet capabilities will be available only through BFR/New Business Request Process. Rates for the packet capabilities will be determined via the Bona Fide Request/New Business Request Process.																
2-WIRE VOICE GRADE LINE PORT RATES (DID)																
	Exchange Ports-2W DID Port			UEPEX	UEPP2	9.29	115.85	18.20								
2-WIRE VOICE GRADE LINE PORT RATES (ISDN-BRI)																
	Exchange Ports-2W ISDN Port (See Notes below.)			UEPTX, UEPSX	U1PMA	11.07	70.76	51.46								
	All Features Offered			UEPTX, UEPSX	UEPVF	0.00	0.00	0.00								
	Exchange Ports-2W ISDN Port -- Channel Profiles			UEPTX, UEPSX	U1UMA	0.00	0.00	0.00								
NOTE: Transmission/usage charges associated with POTS circuit switched usage will also apply to circuit switched voice and/or circuit switched data transmission by B-Channels associated with 2-wire ISDN ports.																
NOTE: Access to B Channel or D Channel Packet capabilities will be available only through BFR/New Business Request Process. Rates for the packet capabilities will be determined via the Bona Fide Request/New Business Request Process.																
UNBUNDLED PORT with REMOTE CALL FORWARDING CAPABILITY																
UNBUNDLED REMOTE CALL FORWARDING SERVICE - RESIDENCE																
	Unbundled Remote Call Forwarding Service, Area Calling, Res			UEPVR	UERAC	2.52	2.31	2.21								
	Unbundled Remote Call Forwarding Service, Local Calling-Res			UEPVR	UERLC	2.52	2.31	2.21								
	Unbundled Remote Call Forwarding Service, InterLATA-Res			UEPVR	UERTE	2.52	2.31	2.21								
	Unbundled Remote Call Forwarding Service, IntraLATA-Res			UEPVR	UERTR	2.52	2.31	2.21								
Non-Recurring																
	Unbundled Remote Call Forwarding Service -Conversion-Switch-as-is			UEPVR	USAC2		0.10	0.10								
	Unbundled Remote Call Forwarding Service -Conversion with allowed change (PIC and LPIC)			UEPVR	USACC		0.10	0.10								
UNBUNDLED REMOTE CALL FORWARDING - Bus																
	Unbundled Remote Call Forwarding Service, Area Calling-Bus			UEPVB	UERAC	2.52	2.31	2.21								
	Unbundled Remote Call Forwarding Service, Local Calling-Bus			UEPVB	UERLC	2.52	2.31	2.21								
	Unbundled Remote Call Forwarding Service, InterLATA-Bus			UEPVB	UERTE	2.52	2.31	2.21								
	Unbundled Remote Call Forwarding Service, IntraLATA-Bus			UEPVB	UERTR	2.52	2.31	2.21								
	Unbundled Remote Call Forwarding Service Expanded and Exception Local Calling			UEPVB	UERVJ	2.52	2.31	2.21								
Non-Recurring																
	Unbundled Remote Call Forwarding Service-Conversion-Switch-as-is			UEPVB	USAC2		0.10	0.10								
	Unbundled Remote Call Forwarding Service -Conversion with allowed change (PIC and LPIC)			UEPVB	USACC		0.10	0.10								
UNBUNDLED LOCAL SWITCHING, PORT USAGE																
End Office Switching (Port Usage)																
	End Office Switching Function, Per MOU					0.001868										
	End Office Trunk Port-Shared, Per MOU					0.00018										
Tandem Switching (Port Usage) (Local or Access Tandem)																
	Tandem Switching Function Per MOU					0.0001067										
	Tandem Trunk Port-Shared, Per MOU					0.000222										
	Tandem Switching Function Per MOU (Melded)					0.000035296										
	Tandem Trunk Port-Shared, Per MOU (Melded)					0.000073438										

UNBUNDLED NETWORK ELEMENTS - Louisiana														Attachment: 2 Exh A			
CATEGORY	RATE ELEMENTS	Interim	Zone	BCS	USOC	RATES($)					Svc Order Submitted Elec per LSR	Svc Order Submitted Manually per LSR	Incremental Charge - Manual Svc Order vs. Electronic-1st	Incremental Charge - Manual Svc Order vs. Electronic-Add'l	Incremental Charge - Manual Svc Order vs. Electronic-Disc 1st	Incremental Charge - Manual Svc Order vs. Electronic-Disc Add'l
							Nonrecurring		NRC Disconnect		OSS Rates($)					
						Rec	First	Add'l	First	Add'l	SOMEC	SOMAN	SOMAN	SOMAN	SOMAN	SOMAN
	Melded Factor: 33.08% of the Tandem Rate															
	Common Transport															
	Common Transport-Per Mile, Per MOU					0.0000032										
	Common Transport-Facilities Termination Per MOU					0.0003748										
UNBUNDLED PORT/LOOP COMBINATIONS - COST BASED RATES																
	>Cost Based Rates are applied where BellSouth is required by FCC and/or State Commission rule to provide Unbundled Local Switching or Switch Ports.															
	>The UNE-P Switching Port Rates Reflected in the Cost Based Section Apply to Embedded Base UNE-Ps as of March 10, 2005 and Consist of the TELRIC Cost Based Rates Plus $1.00 in Accordance with the TRRO.															
	>Features shall apply to the Unbundled Port/Loop Combination - Cost Based Rate section in the same manner as they are applied to the Stand-Alone Unbundled Port section of this Rate Exhibit.															
	>End Office and Tandem Switching Usage and Common Transport Usage rates in the Port section of this rate exhibit shall apply to all combinations of loop/port network elements except for UNE Coin Port/Loop Combinations.															
	>The first and additional Port nonrecurring charges apply to Not Currently Combined Combos. For Currently Combined Combos the nonrecurring charges shall be those identified in the Nonrecurring - Currently Combined sections.															
	2-WIRE VOICE GRADE LOOP WITH 2-WIRE LINE PORT (RES)															
	UNE Port/Loop Combination Rates															
	2W VG Loop/Port Combo-Zone 1					14.13										
	2W VG Loop/Port Combo-Zone 2					24.75										
	2W VG Loop/Port Combo-Zone 3					50.62										
	UNE Loop Rates															
	2W VG Loop (SL1)-Zone 1		1	UEPRX	UEPLX	11.77										
	2W VG Loop (SL1)-Zone 2		2	UEPRX	UEPLX	22.39										
	2W VG Loop (SL1)-Zone 3		3	UEPRX	UEPLX	48.26										
	2-Wire Voice Grade Line Port Rates (Res)															
	2W voice unbundled port-residence			UEPRX	UEPRL	2.36	38.85	19.08								
	2W voice unbundled port with Caller ID-res			UEPRX	UEPRC	2.36	38.85	19.08								
	2W voice unbundled port outgoing only-res			UEPRX	UEPRO	2.36	38.85	19.08								
	2W VG unbundled LA extended local dialing parity port with Caller ID-res			UEPRX	UEPAS	2.36	38.85	19.08								
	2W voice unbundled LA Area Plus with Caller ID-res (RUL)			UEPRX	UEPAG	2.36	38.85	19.08								
	2W voice unbundles res, low usage line port with Caller ID (LUM)			UEPRX	UEPAP	2.36	38.85	19.08								
	2W Voice Unbundled LA Residence Dialing Plan w/o Caller ID			UEPRX	UEPWG	2.36	38.85	19.08								
	2W voice unbundled LA Area Plus Port w/o Caller ID Capability			UEPRX	UEPRQ	2.36	38.85	19.08								
	2W voice unbundled Low Usage Line Port w/o Caller ID Capability			UEPRX	UEPRT	2.36	38.85	19.08								
	FEATURES															
	All Features Offered			UEPRX	UEPVF	0.00	0.00	0.00								
	NONRECURRING CHARGES (NRCs) - CURRENTLY COMBINED															
	2W VG Loop/Line Port Combination-Conversion-Switch-as-is			UEPRX	USAC2		0.10	0.10								
	2W VG Loop/Line Port Combination -Conversion-Switch with change			UEPRX	USACC		0.10	0.10								
	2W VG Loop/Line Port Platform-Installation Charge at QuickService location-Not Conversion of Existing Service			UEPRX	URECC		0.10									
	ADDITIONAL NRCs															
	2W VG Loop/Line Port Combination-Subsequent Activity			UEPRX	USAS2	0.00	0.00	0.00								
	Unbundled Misc Rate Element, Tag Loop at End User Premise			UEPRX	URETL		8.33	0.83								
	OFF/ON PREMISES EXTENSION CHANNELS															
	2W Analog VG Extension Loop – Non-Design		1	UEPRX	UEAEN	12.90	36.54	16.87								
	2W Analog VG Extension Loop – Non-Design		2	UEPRX	UEAEN	23.33	36.54	16.87								
	2W Analog VG Extension Loop – Non-Design		3	UEPRX	UEAEN	48.43	36.54	16.87								
	2W Analog VG Extension Loop – Design		1	UEPRX	UEAED	14.93	102.10	65.72								
	2W Analog VG Extension Loop – Design		2	UEPRX	UEAED	25.35	102.10	65.72								
	2W Analog VG Extension Loop – Design		3	UEPRX	UEAED	50.46	102.10	65.72								
	INTEROFFICE TRANSPORT															
	Interoffice Transport-Dedicated-2W VG-Facility Termination			UEPRX	U1TV2	22.60	39.36	26.62								
	Interoffice Transport-Dedicated-2W VG-Per Mile or Fraction Mile			UEPRX	U1TVM	0.013	0.00	0.00								
	2-WIRE VOICE GRADE LOOP WITH 2-WIRE LINE PORT (BUS)															
	UNE Port/Loop Combination Rates															
	2W VG Loop/Port Combo-Zone 1					14.13										
	2W VG Loop/Port Combo-Zone 2					24.75										
	2W VG Loop/Port Combo-Zone 3					50.62										
	UNE Loop Rates															
	2W VG Loop (SL1)-Zone 1		1	UEPBX	UEPLX	11.77										
	2W VG Loop (SL1)-Zone 2		2	UEPBX	UEPLX	22.39										
	2W VG Loop (SL1)-Zone 3		3	UEPBX	UEPLX	48.26										

CATEGORY	RATE ELEMENTS	Interim	Zone	BCS	USOC	RATES($)					Svc Order Submitted Elec per LSR	Svc Order Submitted Manually per LSR	Incremental Charge - Manual Svc Order vs. Electronic-1st	Incremental Charge - Manual Svc Order vs. Electronic-Add'l	Incremental Charge - Manual Svc Order vs. Electronic-Disc 1st	Incremental Charge - Manual Svc Order vs. Electronic-Disc Add'l
							Nonrecurring		NRC Disconnect		OSS Rates($)					
						Rec	First	Add'l	First	Add'l	SOMEC	SOMAN	SOMAN	SOMAN	SOMAN	SOMAN
	2-Wire Voice Grade Line Port (Bus)															
	2W voice unbundled port w/o Caller ID-bus			UEPBX	UEPBL	2.36	38.85	19.08								
	2W voice unbundled port with Caller + E484 ID-bus			UEPBX	UEPBC	2.36	38.85	19.08								
	2W voice unbundled port outgoing only-bus			UEPBX	UEPBO	2.36	38.85	19.08								
	2W VG unbundled LA extended local dialing parity port with Caller ID-bus			UEPBX	UEPAX	2.36	38.85	19.08								
	2W voice unbundled incoming only port with Caller ID-Bus			UEPBX	UEPB1	2.36	38.85	19.08								
	2W voice unbundled LA Bus Area Calling Port with Caller ID (BUC)			UEPBX	UEPAA	2.36	38.85	19.08								
	2W Voice Unbundled LA Business Dialing Plan w/o Caller ID			UEPBX	UEPWH	2.36	38.85	19.08								
	2W voice unbundled LA Business Area Calling Port w/o Caller ID Capability			UEPBX	UEPBA	2.36	38.85	19.08								
	2W voice unbundled Incoming Only Port w/o Caller ID Capability			UEPBX	UEPBE	2.36	38.85	19.08								
	FEATURES															
	All Features Offered			UEPBX	UEPVF	0.00	0.00	0.00								
	NONRECURRING CHARGES (NRCs) - CURRENTLY COMBINED															
	2W VG Loop/Line Port Combination-Conversion-Switch-as-is			UEPBX	USAC2		0.10	0.10								
	2W VG Loop/Line Port Combination -Conversion-Switch with change			UEPBX	USACC		0.10	0.10								
	ADDITIONAL NRCs															
	2W VG Loop/Line Port Combination-Subsequent Activity			UEPBX	USAS2		0.00	0.00								
	Unbundled Misc Rate Element, Tag Loop at End User Premise			UEPBX	URETL		8.33	0.83								
	OFF/ON PREMISES EXTENSION CHANNELS															
	2W Analog VG Extension Loop – Non-Design		1	UEPBX	UEAEN	12.90	36.54	16.87								
	2W Analog VG Extension Loop – Non-Design		2	UEPBX	UEAEN	23.33	36.54	16.87								
	2W Analog VG Extension Loop – Non-Design		3	UEPBX	UEAEN	48.43	36.54	16.87								
	2W Analog VG Extension Loop – Design		1	UEPBX	UEAED	14.93	102.10	65.72								
	2W Analog VG Extension Loop – Design		2	UEPBX	UEAED	25.35	102.10	65.72								
	2W Analog VG Extension Loop – Design		3	UEPBX	UEAED	50.46	102.10	65.72								
	INTEROFFICE TRANSPORT															
	Interoffice Transport-Dedicated-2W VG-Facility Termination			UEPBX	U1TV2	22.60	39.36	26.62								
	Interoffice Transport-Dedicated-2W VG-Per Mile or Fraction Mile			UEPBX	U1TVM	0.013	0.00	0.00								
	2-WIRE VOICE GRADE LOOP WITH 2-WIRE LINE PORT (RES - PBX)															
	UNE Port/Loop Combination Rates															
	2W VG Loop/Port Combo-Zone 1					14.13										
	2W VG Loop/Port Combo-Zone 2					24.75										
	2W VG Loop/Port Combo-Zone 3					50.62										
	UNE Loop Rates															
	2W VG Loop (SL 1)-Zone 1		1	UEPRG	UEPLX	11.77										
	2W VG Loop (SL 1)-Zone 2		2	UEPRG	UEPLX	22.39										
	2W VG Loop (SL 1)-Zone 3		3	UEPRG	UEPLX	48.26										
	2-Wire Voice Grade Line Port Rates (RES - PBX)															
	2W VG Unbundled Combination 2-Way PBX Trunk Port-Res			UEPRG	UEPRD	2.36	66.91	31.29								
	FEATURES															
	All Features Offered			UEPRG	UEPVF	0.00	0.00	0.00								
	NONRECURRING CHARGES (NRCs) - CURRENTLY COMBINED															
	2W VG Loop/ Line Port Combination (PBX)-Conversion-Switch-As-Is			UEPRG	USAC2		7.68	1.85								
	2W VG Loop/ Line Port Combination (PBX)-Conversion-Switch with Change			UEPRG	USACC		7.68	1.85								
	ADDITIONAL NRCs															
	2W VG Loop/ Line Port Combination (PBX)-Subsequent Activity			UEPRG	USAS2	0.00	0.00	0.00								
	PBX Subsequent Activity-Change/Rearrange Multiline Hunt Group						7.11	7.11								
	Unbundled Misc Rate Element, Tag Loop at End User Premise			UEPRG	URETL		8.33	0.83								
	OFF/ON PREMISES EXTENSION CHANNELS															
	Local Channel VG, per termination		1	UEPRG	P2JHX	14.93	102.10	65.72								
	Local Channel VG, per termination		2	UEPRG	P2JHX	25.35	102.10	65.72								
	Local Channel VG, per termination		3	UEPRG	P2JHX	50.46	102.10	65.72								
	INTEROFFICE TRANSPORT															
	Interoffice Transport-Dedicated-2W VG-Facility Termination			UEPRG	U1TV2	22.60	39.36	26.62								
	Interoffice Transport-Dedicated-2W VG-Per Mile or Fraction Mile			UEPRG	U1TVM	0.013	0.00	0.00								
	2-WIRE VOICE GRADE LOOP WITH 2-WIRE LINE PORT (BUS - PBX)															

UNBUNDLED NETWORK ELEMENTS - Louisiana														Attachment: 2 Exh A			
CATEGORY	RATE ELEMENTS	Interim	Zone	BCS	USOC	RATES($)					Svc Order Submitted Elec per LSR	Svc Order Submitted Manually per LSR	Incremental Charge - Manual Svc Order vs. Electronic-1st	Incremental Charge - Manual Svc Order vs. Electronic-Add'l	Incremental Charge - Manual Svc Order vs. Electronic-Disc 1st	Incremental Charge - Manual Svc Order vs. Electronic-Disc Add'l
							Nonrecurring		NRC Disconnect		OSS Rates($)					
						Rec	First	Add'l	First	Add'l	SOMEC	SOMAN	SOMAN	SOMAN	SOMAN	SOMAN
UNE Port/Loop Combination Rates																
	2W VG Loop/Port Combo-Zone 1					14.13										
	2W VG Loop/Port Combo-Zone 2					24.75										
	2W VG Loop/Port Combo-Zone 3					50.62										
UNE Loop Rates																
	2W VG Loop (SL 1)-Zone 1		1	UEPPX	UEPLX	11.77										
	2W VG Loop (SL 1)-Zone 2		2	UEPPX	UEPLX	22.39										
	2W VG Loop (SL 1)-Zone 3		3	UEPPX	UEPLX	48.26										
2-Wire Voice Grade Line Port Rates (BUS - PBX)																
	Line Side Unbundled Combination 2-Way PBX Trunk Port-Bus			UEPPX	UEPPC	2.36	66.91	31.29								
	Line Side Unbundled Outward PBX Trunk Port-Bus			UEPPX	UEPPO	2.36	66.91	31.29								
	Line Side Unbundled Incoming PBX Trunk Port-Bus			UEPPX	UEPP1	2.36	66.91	31.29								
	2W Voice Unbundled 2-Way Combination PBX LA Calling Port			UEPPX	UEPL2	2.36	66.91	31.29								
	2W Voice Unbundled PBX LD Terminal Ports			UEPPX	UEPLD	2.36	66.91	31.29								
	2W Voice Unbundled 2-Way Combination PBX Usage Port			UEPPX	UEPXA	2.36	66.91	31.29								
	2W Voice Unbundled PBX Toll Terminal Hotel Ports			UEPPX	UEPXB	2.36	66.91	31.29								
	2W Voice Unbundled PBX LD DDD Terminals Port			UEPPX	UEPXC	2.36	66.91	31.29								
	2W Voice Unbundled PBX LD Terminal Switchboard Port			UEPPX	UEPXD	2.36	66.91	31.29								
	2W Voice Unbundled PBX LD Terminal Switchboard IDD Capable Port			UEPPX	UEPXE	2.36	66.91	31.29								
	2W Voice Unbundled 2-Way PBX LA Local Optional Calling Port			UEPPX	UEPXK	2.36	66.91	31.29								
	2W Voice Unbundled 2-Way PBX Hotel/Hospital Economy Administrative Calling Port			UEPPX	UEPXL	2.36	66.91	31.29								
	2W Voice Unbundled 2-Way PBX Hotel/Hospital Economy Rm Calling Port			UEPPX	UEPXM	2.36	66.91	31.29								
	2W Voice Unbundled 1-Way Outgoing PBX Hotel/Hospital Discount Rm Calling Port			UEPPX	UEPXO	2.36	66.91	31.29								
	2W Voice Unbundled 1-Way Outgoing PBX LA Local Discount Calling Port			UEPPX	UEPXP	2.36	66.91	31.29								
	2W Voice Unbundled 1-Way Outgoing PBX Measured Port			UEPPX	UEPXS	2.36	66.91	31.29								
FEATURES																
	All Features Offered			UEPPX	UEPVF	0.00	0.00	0.00								
NONRECURRING CHARGES (NRCs) - CURRENTLY COMBINED																
	2W VG Loop/ Line Port Combination (PBX)-Conversion-Switch-As-Is			UEPPX	USAC2		7.68	1.85								
	2W VG Loop/ Line Port Combination (PBX)-Conversion-Switch with Change			UEPPX	USACC		7.68	1.85								
ADDITIONAL NRCs																
	2W VG Loop/ Line Port Combination (PBX)-Subsequent Activity			UEPPX	USAS2	0.00	0.00	0.00								
	PBX Subsequent Activity-Change/Rearrange Multiline Hunt Group						7.11	7.11								
	Unbundled Misc Rate Element, Tag Loop at End User Premise			UEPPX	URETL		8.33	0.83								
OFF/ON PREMISES EXTENSION CHANNELS																
	Local Channel VG, per termination		1	UEPPX	P2JHX	14.93	102.10	65.72								
	Local Channel VG, per termination		2	UEPPX	P2JHX	25.35	102.10	65.72								
	Local Channel VG, per termination		3	UEPPX	P2JHX	50.46	102.10	65.72								
INTEROFFICE TRANSPORT																
	Interoffice Transport-Dedicated-2W VG-Facility Termination			UEPPX	U1TV2	22.60	39.36	26.62								
	Interoffice Transport-Dedicated-2W VG-Per Mile or Fraction Mile			UEPPX	U1TVM	0.013	0.00	0.00								
2-WIRE VOICE GRADE LOOP WITH 2-WIRE ANALOG LINE COIN PORT																
UNE Port/Loop Combination Rates																
	2W VG Coin Port/Loop Combo – Zone 1					14.13										
	2W VG Coin Port/Loop Combo – Zone 2					24.75										
	2W VG Coin Port/Loop Combo – Zone 3					50.62										
UNE Loop Rates																
	2W VG Loop (SL1)-Zone 1		1	UEPCO	UEPLX	11.77										
	2W VG Loop (SL1)-Zone 2		2	UEPCO	UEPLX	22.39										
	2W VG Loop (SL1)-Zone 3		3	UEPCO	UEPLX	48.26										
2-Wire Voice Grade Line Ports (COIN)																
	2W Coin 2-Way w/o Operator Screening and w/o Blocking (AL, KY, LA, MS)			UEPCO	UEPRF	2.36	38.85	19.08								

UNBUNDLED NETWORK ELEMENTS - Louisiana														Attachment: 2 Exh A			
CATEGORY	RATE ELEMENTS	Interim	Zone	BCS	USOC	RATES($)					Svc Order Submitted Elec per LSR	Svc Order Submitted Manually per LSR	Incremental Charge - Manual Svc Order vs. Electronic-1st	Incremental Charge - Manual Svc Order vs. Electronic-Add'l	Incremental Charge - Manual Svc Order vs. Electronic-Disc 1st	Incremental Charge - Manual Svc Order vs. Electronic-Disc Add'l
							Nonrecurring		NRC Disconnect		OSS Rates($)					
						Rec	First	Add'l	First	Add'l	SOMEC	SOMAN	SOMAN	SOMAN	SOMAN	SOMAN
	2W Coin 2-Way with Operator Screening and Blocking: 011, 900/976, 1+DDD (AL, KY, LA, MS)			UEPCO	UEPRA	2.36	38.85	19.08								
	2W Coin 2-Way with Operator Screening and 011 Blocking (AL, LA, MS)			UEPCO	UEPRB	2.36	38.85	19.08								
	2W Coin 2-Way with Operator Screening & Blocking: 900/976, 1+DDD, 011+, & Local (AL, KY, LA, MS)			UEPCO	UEPCD	2.36	38.85	19.08								
	2W Coin Outward w/o Blocking and w/o Operator Screening (KY, LA, MS)			UEPCO	UEPRN	2.36	38.85	19.08								
	2W Coin Outward with Operator Screening and 011 Blocking (LA)			UEPCO	UEPLA	2.36	38.85	19.08								
	2W Coin Outward with Operator Screening and Blocking: 011, 900/976, 1+DDD (AL, KY, LA, MS)			UEPCO	UEPRH	2.36	38.85	19.08								
	2W Coin Outward Operator Screening & Blocking: 900/976, 1+DDD, 011+, and Local (AL, KY, LA, MS)			UEPCO	UEPCN	2.36	38.85	19.08								
	2W Coin 2-Way Smartline with 900/976 (LA only)			UEPCO	UEPNA	2.36	38.85	19.08								
	2W Coin Outward Smartline with 900/976 (LA only)			UEPCO	UEPCB	2.36	38.85	19.08								
ADDITIONAL UNE COIN PORT/LOOP (RC)																
	UNE Coin Port/Loop Combo Usage (Flat Rate)			UEPCO	URECU	1.81	0.00	0.00	0.00	0.00						
NONRECURRING CHARGES - CURRENTLY COMBINED																
	2W VG Loop/Line Port Combination -Conversion-Switch-as-is			UEPCO	USAC2		0.10	0.10								
	2W VG Loop/Line Port Combination -Conversion-Switch with change			UEPCO	USACC		0.10	0.10								
ADDITIONAL NRCs																
	2W VG Loop/Line Port Combination-Subsequent Activity			UEPCO	USAS2		0.00	0.00								
	Unbundled Misc Rate Element, Tag Loop at End User Premise			UEPCO	URETL		8.33	0.83								
2-WIRE VOICE LOOP/ 2WIRE VOICE GRADE IO TRANSPORT/ 2-WIRE LINE PORT (RES)																
UNE Port/Loop Combination Rates																
	2W VG Loop/IO Tranport/Port Combo-Zone 1					17.45										
	2W VG Loop/IO Tranport/Port Combo-Zone 2					27.87										
	2W VG Loop/IO Tranport/Port Combo-Zone 3					52.98										
UNE Loop Rates																
	2W VG Loop (SL2)-Zone 1		1	UEPFR	UECF2	14.93										
	2W VG Loop (SL2)-Zone 2		2	UEPFR	UECF2	25.35										
	2W VG Loop (SL2)-Zone 3		3	UEPFR	UECF2	50.46										
2-Wire Voice Grade Line Port Rates (Res)																
	2W voice unbundled port-residence			UEPFR	UEPRL	2.52	104.41	67.93								
	2W voice unbundled port with Caller ID-res			UEPFR	UEPRC	2.52	104.41	67.93								
	2W voice unbundled port outgoing only-res			UEPFR	UEPRO	2.52	104.41	67.93								
	2W VG unbundled LA extended local dialing parity port with Caller ID-res			UEPFR	UEPAS	2.52	104.41	67.93								
	2W voice unbundled LA Area Plus with Caller ID-res (RUL)			UEPFR	UEPAG	2.52	104.41	67.93								
	2W voice unbundles res, low usage line port with Caller ID (LUM)			UEPFR	UEPAP	2.52	104.41	67.93								
	2W Voice Unbundled LA Residence Dialing Plan w/o Caller ID			UEPFR	UEPWG	2.52	104.41	67.93								
INTEROFFICE TRANSPORT																
	Interoffice Transport-Dedicated-2W VG-Facility Termination			UEPFR	U1TV2	22.60	39.36	26.62								
	Interoffice Transport-Dedicated-2W VG-Per Mile or Fraction Mile			UEPFR	1L5XX	0.013										
FEATURES																
	All Features Offered			UEPFR	UEPVF	0.00	0.00	0.00								
NONRECURRING CHARGES (NRCs) - CURRENTLY COMBINED																
	2W Loop/Dedicated IO Transport/2W Line Port Combination-Conversion-Switch-as-is			UEPFR	USAC2		8.24	1.81								
	2W Loop/Dedicated IO Transport/2W Line Port Combination-Conversion-Switch-With-Change			UEPFR	USACC		8.24	1.81								
	Unbundled Misc Rate Element, Tag Designed Loop at End User Premise			UEPFR	URETN		11.20	1.10								
2-WIRE VOICE LOOP/ 2WIRE VOICE GRADE IO TRANSPORT/ 2-WIRE LINE PORT (BUS)																
UNE Port/Loop Combination Rates																
	2W VG Loop/IO Tranport/Port Combo-Zone 1					17.45										
	2W VG Loop/IO Tranport/Port Combo-Zone 2					27.87										
	2W VG Loop/IO Tranport/Port Combo-Zone 3					52.98										
UNE Loop Rates																

CATEGORY	RATE ELEMENTS	Interim	Zone	BCS	USOC	RATES($)					Svc Order Submitted Elec per LSR	Svc Order Submitted Manually per LSR	Incremental Charge - Manual Svc Order vs. Electronic-1st	Incremental Charge - Manual Svc Order vs. Electronic-Add'l	Incremental Charge - Manual Svc Order vs. Electronic-Disc 1st	Incremental Charge - Manual Svc Order vs. Electronic-Disc Add'l
							Nonrecurring		NRC Disconnect		OSS Rates($)					
						Rec	First	Add'l	First	Add'l	SOMEC	SOMAN	SOMAN	SOMAN	SOMAN	SOMAN
	2W VG Loop (SL2)-Zone 1		1	UEPFB	UECF2	14.93										
	2W VG Loop (SL2)-Zone 2		2	UEPFB	UECF2	25.35										
	2W VG Loop (SL2)-Zone 3		3	UEPFB	UECF2	50.46										
2-Wire Voice Grade Line Port (Bus)																
	2W voice unbundled port w/o Caller ID-bus			UEPFB	UEPBL	2.52	104.41	67.93								
	2W voice unbundled port with Caller + E484 ID-bus			UEPFB	UEPBC	2.52	104.41	67.93								
	2W voice unbundled port outgoing only-bus			UEPFB	UEPBO	2.52	104.41	67.93								
	2W VG unbundled AL extended local dialing parity port with Caller ID-bus			UEPFB	UEPAW	2.52										
	2W VG unbundled LA extended local dialing parity port with Caller ID-bus			UEPFB	UEPAX	2.52	104.41	67.93								
	2W voice unbundled incoming only port with Caller ID-Bus			UEPFB	UEPB1	2.52	104.41	67.93								
	2W voice unbundled LA Bus Area Calling Port with Caller ID (BUC)			UEPFB	UEPAA	2.52	104.41	67.93								
	2W Voice Unbundled LA Business Dialing Plan w/o Caller ID			UEPFB	UEPWH	2.52	104.41	67.93								
INTEROFFICE TRANSPORT																
	Interoffice Transport-Dedicated-2W VG-Facility Termination			UEPFB	U1TV2	22.60	39.36	26.62								
	Interoffice Transport-Dedicated-2W VG-Per Mile or Fraction Mile			UEPFB	1L5XX	0.013										
FEATURES																
	All Features Offered			UEPFB	UEPVF	0.00	0.00	0.00								
NONRECURRING CHARGES (NRCs) - CURRENTLY COMBINED																
	2W Loop/Dedicated IO Transport/2W Line Port Combination-Conversion-Switch-as-is			UEPFB	USAC2		8.24	1.81								
	2W Loop/Dedicated IO Transport/2W Line Port Combination-Conversion-Switch with change			UEPFB	USACC		8.24	1.81								
	Unbundled Misc Rate Element, Tag Designed Loop at End User Premise			UEPFB	URETN		11.20	1.10								
2-WIRE VOICE LOOP/ 2WIRE VOICE GRADE IO TRANSPORT/ 2-WIRE LINE PORT (PBX)																
UNE Port/Loop Combination Rates																
	2W VG Loop/IO Tranport/Port Combo-Zone 1					17.45										
	2W VG Loop/IO Tranport/Port Combo-Zone 2					27.87										
	2W VG Loop/IO Tranport/Port Combo-Zone 3					52.98										
UNE Loop Rates																
	2W VG Loop (SL2)-Zone 1		1	UEPFP	UECF2	14.93										
	2W VG Loop (SL2)-Zone 2		2	UEPFP	UECF2	25.35										
	2W VG Loop (SL2)-Zone 3		3	UEPFP	UECF2	50.46										
2-Wire Voice Grade Line Port Rates (BUS - PBX)																
	Line Side Unbundled Combination 2-Way PBX Trunk Port-Bus			UEPFP	UEPPC	2.52	132.47	82.14								
	Line Side Unbundled Outward PBX Trunk Port-Bus			UEPFP	UEPPO	2.52	132.47	82.14								
	Line Side Unbundled Incoming PBX Trunk Port-Bus			UEPFP	UEPP1	2.52	132.47	82.14								
	2W Voice Unbundled 2-Way Combination PBX LA Calling Port			UEPFP	UEPL2	2.52	132.47	82.14								
	2W Voice Unbundled PBX LD Terminal Ports			UEPFP	UEPLD	2.52	132.47	82.14								
	2W Voice Unbundled 2-Way Combination PBX Usage Port			UEPFP	UEPXA	2.52	132.47	82.14								
	2W Voice Unbundled PBX Toll Terminal Hotel Ports			UEPFP	UEPXB	2.52	132.47	82.14								
	2W Voice Unbundled PBX LD DDD Terminals Port			UEPFP	UEPXC	2.52	132.47	82.14								
	2W Voice Unbundled PBX LD Terminal Switchboard Port			UEPFP	UEPXD	2.52	132.47	82.14								
	2W Voice Unbundled PBX LD Terminal Switchboard IDD Capable Port			UEPFP	UEPXE	2.52	132.47	82.14								
	2W Voice Unbundled 2-Way PBX LA Local Optional Calling Port			UEPFP	UEPXK	2.52	132.47	82.14								
	2W Voice Unbundled 2-Way PBX Hotel/Hospital Economy Administrative Calling Port			UEPFP	UEPXL	2.52	132.47	82.14								
	2W Voice Unbundled 2-Way PBX Hotel/Hospital Economy Rm Calling Port			UEPFP	UEPXM	2.52	132.47	82.14								
	2W Voice Unbundled 1-Way Outgoing PBX Hotel/Hospital Discount Rm Calling Port			UEPFP	UEPXO	2.52	132.47	82.14								
	2W Voice Unbundled 1-Way Outgoing PBX LA Local Discount Calling Port			UEPFP	UEPXP	2.52	132.47	82.14								
	2W Voice Unbundled 1-Way Outgoing PBX Measured Port			UEPFP	UEPXS	2.52	132.47	82.14								
INTEROFFICE TRANSPORT																
	Interoffice Transport-Dedicated-2W VG-Facility Termination			UEPFP	U1TV2	22.60	39.36	26.62								

CATEGORY	RATE ELEMENTS	Interim	Zone	BCS	USOC	RATES($)					Svc Order Submitted Elec per LSR	Svc Order Submitted Manually per LSR	Incremental Charge - Manual Svc Order vs. Electronic-1st	Incremental Charge - Manual Svc Order vs. Electronic-Add'l	Incremental Charge - Manual Svc Order vs. Electronic-Disc 1st	Incremental Charge - Manual Svc Order vs. Electronic-Disc Add'l
							Nonrecurring		NRC Disconnect		OSS Rates($)					
						Rec	First	Add'l	First	Add'l	SOMEC	SOMAN	SOMAN	SOMAN	SOMAN	SOMAN
	Interoffice Transport-Dedicated-2W VG-Per Mile or Fraction Mile			UEPFP	1L5XX	0.013										
FEATURES																
	All Features Offered			UEPFP	UEPVF	0.00	0.00	0.00								
NONRECURRING CHARGES (NRCs) - CURRENTLY COMBINED																
	2W Loop/Dedicated IO Transport/2W Line Port Combination-Conversion-Switch-as-is			UEPFP	USAC2		8.24	1.81								
	2W Loop/Dedicated IO Transport/2W Line Port Combination-Conversion-Switch with change			UEPFP	USACC		8.24	1.81								
	Unbundled Misc Rate Element, Tag Designed Loop at End User Premise			UEPFP	URETN		11.20	1.10								
2-WIRE VOICE GRADE LOOP- BUS ONLY - WITH 2-WIRE DID TRUNK PORT																
UNE Port/Loop Combination Rates																
	2W VG Loop/2W DID Trunk Port Combo-UNE Zone 1					24.20										
	2W VG Loop/2W DID Trunk Port Combo-UNE Zone 2					34.62										
	2W VG Loop/2W DID Trunk Port Combo-UNE Zone 3					59.73										
UNE Loop Rates																
	2W Analog VG Loop- (SL2)-UNE Zone 1		1	UEPPX	UECD1	14.93										
	2W Analog VG Loop- (SL2)-UNE Zone 2		2	UEPPX	UECD1	25.35										
	2W Analog VG Loop- (SL2)-UNE Zone 3		3	UEPPX	UECD1	50.46										
UNE Port Rate																
	Exchange Ports-2W DID Port			UEPPX	UEPD1	9.27	217.95	83.92								
NONRECURRING CHARGES - CURRENTLY COMBINED																
	2W VG Loop/2W DID Trunk Port Combination -Switch-as-is			UEPPX	USAC1		7.10	1.81								
	2W VG Loop/2W DID Trunk Port Conversion with BellSouth Allowable Changes			UEPPX	USA1C		7.10	1.81								
ADDITIONAL NRCs																
	2W DID Subsequent Activity-Add Trunks, Per Trunk			UEPPX	USAS1		26.01	26.01								
	Unbundled Misc Rate Element, Tag Designed Loop at End User Premise			UEPPX	URETN		11.20	1.10								
Telephone Number/Trunk Group Establisment Charges																
	DID Trunk Termination (One Per Port)			UEPPX	NDT	0.00	0.00	0.00								
	Additional DID Numbers for each Group of 20 DID Numbers			UEPPX	ND4	0.00	0.00	0.00								
	DID Numbers, Non- consecutive DID Numbers , Per Number			UEPPX	ND5	0.00	0.00	0.00								
	Reserve Non-Consecutive DID numbers			UEPPX	ND6	0.00	0.00	0.00								
	Reserve DID Numbers			UEPPX	NDV	0.00	0.00	0.00								
2-WIRE ISDN DIGITAL GRADE LOOP WITH 2-WIRE ISDN DIGITAL LINE SIDE PORT																
UNE Port/Loop Combination Rates																
	2W ISDN Digital Grade Loop/2W ISDN Digital Line Side Port -UNE Zone 1					28.48										
	2W ISDN Digital Grade Loop/2W ISDN Digital Line Side Port -UNE Zone 2					41.34										
	2W ISDN Digital Grade Loop/2W ISDN Digital Line Side Port -UNE Zone 3					71.99										
UNE Loop Rates																
	2W ISDN Digital Grade Loop-UNE Zone 1		1	UEPPB UEPPR	USL2X	19.09										
	2W ISDN Digital Grade Loop-UNE Zone 2		2	UEPPB UEPPR	USL2X	31.95										
	2W ISDN Digital Grade Loop-UNE Zone 3		3	UEPPB UEPPR	USL2X	62.60										
UNE Port Rate																
	Exchange Port-2W ISDN Line Side Port			UEPPR	UEPPR	9.39	184.10	128.42								
	Exchange Port-2W ISDN Line Side Port			UEPPB	UEPPB	9.39	184.10	128.42								
NONRECURRING CHARGES - CURRENTLY COMBINED																
	2W ISDN Digital Grade Loop/2W ISDN Line Side Port Combination-Conversion			UEPPB UEPPR	USACB	0.00	37.40	26.23								
ADDITIONAL NRCs																
	Unbundled Misc Rate Element, Tag Designed Loop at End User Premise			UEPPB UEPPR	URETN		11.20	1.10								
	Unbundled Misc Rate Element, Tag Loop at End User Premise			UEPPB UEPPR	URETL		8.33	0.83								
B-CHANNEL USER PROFILE ACCESS:																

UNBUNDLED NETWORK ELEMENTS - Louisiana														Attachment: 2 Exh A			
CATEGORY	RATE ELEMENTS	Interim	Zone	BCS	USOC	RATES($)					Svc Order Submitted Elec per LSR	Svc Order Submitted Manually per LSR	Incremental Charge - Manual Svc Order vs. Electronic-1st	Incremental Charge - Manual Svc Order vs. Electronic-Add'l	Incremental Charge - Manual Svc Order vs. Electronic-Disc 1st	Incremental Charge - Manual Svc Order vs. Electronic-Disc Add'l
							Nonrecurring		NRC Disconnect		OSS Rates($)					
						Rec	First	Add'l	First	Add'l	SOMEC	SOMAN	SOMAN	SOMAN	SOMAN	SOMAN
	CVS/CSD (DMS/5ESS)			UEPPB UEPPR	U1UCA	0.00	0.00	0.00								
	CVS (EWSD)			UEPPB UEPPR	U1UCB	0.00	0.00	0.00								
	CSD			UEPPB UEPPR	U1UCC	0.00	0.00	0.00								
B-CHANNEL AREA PLUS USER PROFILE ACCESS: (AL,KY,LA,MS SC,MS, & TN)																
	CVS/CSD (DMS/5ESS)			UEPPB UEPPR	U1UCD	0.00	0.00	0.00								
	CVS (EWSD)			UEPPB UEPPR	U1UCE	0.00	0.00	0.00								
	CSD			UEPPB UEPPR	U1UCF	0.00	0.00	0.00								
USER TERMINAL PROFILE																
	User Terminal Profile (EWSD only)			UEPPB UEPPR	U1UMA	0.00	0.00	0.00								
VERTICAL FEATURES																
	All Vertical Features-One per Channel B User Profile			UEPPB UEPPR	UEPVF	0.00	0.00	0.00								
INTEROFFICE CHANNEL MILEAGE																
	Interoffice Channel mileage each, including first mile and facilities termination			UEPPB UEPPR	M1GNC	22.613	39.36	26.62								
	Interoffice Channel mileage each, additional mile			UEPPB UEPPR	M1GNM	0.013	0.00	0.00								
UNBUNDLED CENTREX PORT/LOOP COMBINATIONS - COST BASED RATES																
UNE-P CENTREX - 1AESS - (Valid in AL,FL,GA,KY,LA,MS,&TN only)																
2-Wire VG Loop/2-Wire Voice Grade Port (Centrex) Combo																
UNE Port/Loop Combination Rates (Non-Design)																
	2W VG Loop/2W VG Port (Centrex) Port Combo-Non-Design					14.13										
	2W VG Loop/2W VG Port (Centrex)Port Combo-Non-Design					24.75										
	2W VG Loop/2W VG Port (Centrex)Port Combo-Non-Design					50.62										
UNE Port/Loop Combination Rates (Design)																
	2W VG Loop/2W VG Port (Centrex) Port Combo-Design					17.29										
	2W VG Loop/2W VG Port (Centrex)Port Combo-Design					27.71										
	2W VG Loop/2W VG Port (Centrex)Port Combo-Design					49.26										
UNE Loop Rate																
	2W VG Loop (SL 1)-Zone 1		1	UEP91	UECS1	11.77										
	2W VG Loop (SL 1)-Zone 2		2	UEP91	UECS1	22.39										
	2W VG Loop (SL 1)-Zone 3		3	UEP91	UECS1	48.26										
	2W VG Loop (SL 2)-Zone 1		1	UEP91	UECS2	14.93										
	2W VG Loop (SL 2)-Zone 2		2	UEP91	UECS2	25.35										
	2W VG Loop (SL 2)-Zone 3		3	UEP91	UECS2	50.46										
UNE Ports																
All States (Except North Carolina and Sout Carolina)																
	2W VG Port (Centrex) Basic Local Area			UEP91	UEPYA	2.36	38.85	19.08								
	2W VG Port (Centrex 800 termination)Basic Local Area			UEP91	UEPYB	2.36	38.85	19.08								
	2W VG Port (Centrex with Caller ID)Note1 Basic Local Area			UEP91	UEPYH	2.36	38.85	19.08								
	2W VG Port (Centrex from diff SWC) Note 2, 3 Basic Local Area			UEP91	UEPYM	2.36	104.41	67.93								
	2W VG Port, Diff SWC-800 Service Term-Basic Local Area			UEP91	UEPYZ	2.36	104.41	67.93								
	2W VG Port terminated in on Megalink or equivalent-Basic Local Area			UEP91	UEPY9	2.36	38.85	19.08								
	2W VG Port Terminated on 800 Service Term-Basic Local Area			UEP91	UEPY2	2.36	38.85	19.08								
AL, KY, LA, MS, & TN Only																
	2W VG Port (Centrex)			UEP91	UEPQA	2.36	38.85	19.08								
	2W VG Port (Centrex 800 termination)			UEP91	UEPQB	2.36	38.85	19.08								
	2W VG Port (Centrex with Caller ID)1			UEP91	UEPQH	2.36	38.85	19.08								
	2W VG Port (Centrex from diff SWC)2,3			UEP91	UEPQM	2.36	104.41	67.93								
	2W VG Port, Diff SWC-2,3-800 Service Term			UEP91	UEPQZ	2.36	104.41	67.93								
	2W VG Port terminated in on Megalink or equivalent			UEP91	UEPQ9	2.36	38.85	19.08								
	2W VG Port Terminated on 800 Service Term			UEP91	UEPQ2	2.36	38.85	19.08								
Local Switching																
	Centrex Intercom Funtionality, per port			UEP91	URECS	0.8577										
Features																
	All Standard Features Offered, per port			UEP91	UEPVF	0.00										
	All Select Features Offered, per port			UEP91	UEPVS	0.00	412.25									
	All Centrex Control Features Offered, per port			UEP91	UEPVC	0.00										
NARS																
	Unbundled Network Access Register-Combination			UEP91	UARCX	0.00	0.00	0.00	0.00	0.00						

CATEGORY	RATE ELEMENTS	Interim	Zone	BCS	USOC	RATES($)					Svc Order Submitted Elec per LSR	Svc Order Submitted Manually per LSR	Incremental Charge - Manual Svc Order vs. Electronic-1st	Incremental Charge - Manual Svc Order vs. Electronic-Add'l	Incremental Charge - Manual Svc Order vs. Electronic-Disc 1st	Incremental Charge - Manual Svc Order vs. Electronic-Disc Add'l
							Nonrecurring		NRC Disconnect		OSS Rates($)					
						Rec	First	Add'l	First	Add'l	SOMEC	SOMAN	SOMAN	SOMAN	SOMAN	SOMAN
	Unbundled Network Access Register-Indial			UEP91	UAR1X	0.00	0.00	0.00	0.00	0.00						
	Unbundled Network Access Register-Outdial			UEP91	UAROX	0.00	0.00	0.00	0.00	0.00						
Misc Terminations																
2-Wire Trunk Side																
	Trunk Side Terminations, each			UEP91	CENA6	8.29	115.85	18.20								
Interoffice Channel Mileage - 2-Wire																
	Interoffice Channel Facilities Termination-VG			UEP91	M1GBC	22.60	39.36	26.62								
	Interoffice Channel mileage, per mile or fraction of mile			UEP91	M1GBM	0.013										
Feature Activations (DS0) Centrex Loops on Channelized DS1 Service																
D4 Channel Bank Feature Activations																
	Feature Activation on D-4 Channel Bank Centrex Loop Slot			UEP91	1PQWS	0.6497										
	Feature Activation on D-4 Channel Bank FX line Side Loop Slot			UEP91	1PQW6	0.6497										
	Feature Activation on D-4 Channel Bank FX Trunk Side Loop Slot			UEP91	1PQW7	0.6497										
	Feature Activation on D-4 Channel Bank Centrex Loop Slot-Different WC			UEP91	1PQWP	0.6497										
	Feature Activation on D-4 Channel Bank Private Line Loop Slot			UEP91	1PQWV	0.6497										
	Feature Activation on D-4 Channel Bank Tjie Line/Trunk Loop Slot			UEP91	1PQWQ	0.6497										
	Feature Activation on D-4 Channel Bank WATS Loop Slot			UEP91	1PQWA	0.6497										
Non-Recurring Charges (NRC) Associated with UNE-P Centrex																
	Conversion-Currently Combined Switch-As-Is with allowed changes, per port			UEP91	USAC2		0.10	0.10								
	Conversion of Existing Centrex Common Block			UEP91	USACN	0.00	36.66	16.10								
	New Centrex Standard Common Block			UEP91	M1ACS	0.00	680.40									
	New Centrex Customized Common Block			UEP91	M1ACC	0.00	680.40									
	Secondary Block, per Block			UEP91	M2CC1	0.00	79.31									
	NAR Establishment Charge, Per Occasion			UEP91	URECA	0.00	73.93									
Additional Non-Recurring Charges (NRC)																
	Unbundled Misc Rate Element, Tag Loop at End Use Premise			UEP91	URETL		8.33	0.83								
	Unbundled Misc Rate Element, Tag Design Loop at End Use Premise			UEP91	URETN		11.20	1.10								
UNE-P CENTREX - 5ESS (Valid in All States)																
2-Wire VG Loop/2-Wire Voice Grade Port (Centrex) Combo																
UNE Port/Loop Combination Rates (Non-Design)																
	2W VG Loop/2W VG Port (Centrex) Port Combo-Non-Design					14.13										
	2W VG Loop/2W VG Port (Centrex)Port Combo-Non-Design					24.75										
	2W VG Loop/2W VG Port (Centrex)Port Combo-Non-Design					50.62										
UNE Port/Loop Combination Rates (Design)																
	2W VG Loop/2W VG Port (Centrex) Port Combo-Design					17.29										
	2W VG Loop/2W VG Port (Centrex)Port Combo-Design					27.71										
	2W VG Loop/2W VG Port (Centrex)Port Combo-Design					49.26										
UNE Loop Rate																
	2W VG Loop (SL 1)-Zone 1		1	UEP95	UECS1	11.77										
	2W VG Loop (SL 1)-Zone 2		2	UEP95	UECS1	22.39										
	2W VG Loop (SL 1)-Zone 3		3	UEP95	UECS1	48.26										
	2W VG Loop (SL 2)-Zone 1		1	UEP95	UECS2	14.93										
	2W VG Loop (SL 2)-Zone 2		2	UEP95	UECS2	25.35										
	2W VG Loop (SL 2)-Zone 3		3	UEP95	UECS2	50.46										
UNE Port Rate																
All States																
	2W VG Port (Centrex) Basic Local Area			UEP95	UEPYA	2.36	38.85	19.08								
	2W VG Port (Centrex 800 termination)			UEP95	UEPYB	2.36	38.85	19.08								
	2W VG Port (Centrex with Caller ID)1Basic Local Area			UEP95	UEPYH	2.36	38.85	19.08								
	2W VG Port (Centrex from diff SWC)2,3 Basic Local Area			UEP95	UEPYM	2.36	104.41	67.93								
	2W VG Port, Diff SWC 2,3-800 Service Term-Basic Local Area			UEP95	UEPYZ	2.36	104.41	67.93								
	2W VG Port terminated in on Megalink or equivalent-Basic Local Area			UEP95	UEPY9	2.36	38.85	19.08								
	2W VG Port Terminated on 800 Service Term-Basic Local Area			UEP95	UEPY2	2.36	38.85	19.08								
AL, KY, LA, MS, SC, & TN Only																
	2W VG Port (Centrex)			UEP95	UEPQA	2.36	38.85	19.08								

CATEGORY	RATE ELEMENTS	Interim	Zone	BCS	USOC	RATES($)					Svc Order Submitted Elec per LSR	Svc Order Submitted Manually per LSR	Incremental Charge - Manual Svc Order vs. Electronic-1st	Incremental Charge - Manual Svc Order vs. Electronic-Add'l	Incremental Charge - Manual Svc Order vs. Electronic-Disc 1st	Incremental Charge - Manual Svc Order vs. Electronic-Disc Add'l
							Nonrecurring		NRC Disconnect		OSS Rates($)					
						Rec	First	Add'l	First	Add'l	SOMEC	SOMAN	SOMAN	SOMAN	SOMAN	SOMAN
	2W VG Port (Centrex 800 termination)			UEP95	UEPQB	2.36	38.85	19.08								
	2W VG Port (Centrex with Caller ID)1			UEP95	UEPQH	2.36	38.85	19.08								
	2W VG Port (Centrex from diff SWC)2,3			UEP95	UEPQM	2.36	104.41	67.93								
	2W VG Port, Diff SWC-800 Service Term 2,3			UEP95	UEPQZ	2.36	104.41	67.93								
	2W VG Port terminated in on Megalink or equivalent			UEP95	UEPQ9	2.36	38.85	19.08								
	2W VG Port Terminated on 800 Service Term			UEP95	UEPQ2	2.36	38.85	19.08								
Local Switching																
	Centrex Intercom Funtionality, per port			UEP95	URECS	0.8577										
Features																
	All Standard Features Offered, per port			UEP95	UEPVF	0.00										
	All Select Features Offered, per port			UEP95	UEPVS	0.00	412.25									
	All Centrex Control Features Offered, per port			UEP95	UEPVC	0.00										
NARS																
	Unbundled Network Access Register-Combination			UEP95	UARCX	0.00	0.00	0.00	0.00	0.00						
	Unbundled Network Access Register-Indial			UEP95	UAR1X	0.00	0.00	0.00	0.00	0.00						
	Unbundled Network Access Register-Outdial			UEP95	UAROX	0.00	0.00	0.00	0.00	0.00						
Misc Terminations																
2-Wire Trunk Side																
	Trunk Side Terminations, each			UEP95	CEND6	8.29	115.85	18.20								
4-Wire Digital (1.544 Megabits)																
	DS1 Circuit Terminations, each			UEP95	M1HD1	68.47	196.18	92.92								
	DS0 Channels Activated, each			UEP95	M1HDO	0.00	14.06									
Interoffice Channel Mileage - 2-Wire																
	Interoffice Channel Facilities Termination			UEP95	M1GBC	22.60	39.36	26.62								
	Interoffice Channel mileage, per mile or fraction of mile			UEP95	M1GBM	0.013										
Feature Activations (DS0) Centrex Loops on Channelized DS1 Service																
D4 Channel Bank Feature Activations																
	Feature Activation on D-4 Channel Bank Centrex Loop Slot			UEP95	1PQWS	0.6497										
	Feature Activation on D-4 Channel Bank FX line Side Loop Slot			UEP95	1PQW6	0.6497										
	Feature Activation on D-4 Channel Bank FX Trunk Side Loop Slot			UEP95	1PQW7	0.6497										
	Feature Activation on D-4 Channel Bank Centrex Loop Slot-Different WC			UEP95	1PQWP	0.6497										
	Feature Activation on D-4 Channel Bank Private Line Loop Slot			UEP95	1PQWV	0.6497										
	Feature Activation on D-4 Channel Bank Tjie Line/Trunk Loop Slot			UEP95	1PQWQ	0.6497										
	Feature Activation on D-4 Channel Bank WATS Loop Slot			UEP95	1PQWA	0.6497										
Non-Recurring Charges (NRC) Associated with UNE-P Centrex																
	NRC Conversion Currently Combined Switch-As-Is with allowed changes, per port			UEP95	USAC2		0.10	0.10								
	Conversion of Existing Centrex Common Block, each			UEP95	USACN		36.66	16.10								
	New Centrex Standard Common Block			UEP95	M1ACS	0.00	680.40									
	New Centrex Customized Common Block			UEP95	M1ACC	0.00	680.40									
	NAR Establishment Charge, Per Occasion			UEP95	URECA	0.00	73.93									
Additional Non-Recurring Charges (NRC)																
	Unbundled Misc Rate Element, Tag Loop at End Use Premise			UEP95	URETL		8.33	0.83								
	Unbundled Misc Rate Element, Tag Design Loop at End Use Premise			UEP95	URETN		11.20	1.10								
UNE-P CENTREX - DMS100 (Valid in All States)																
2-Wire VG Loop/2-Wire Voice Grade Port (Centrex) Combo																
UNE Port/Loop Combination Rates (Non-Design)																
	2W VG Loop/2W VG Port (Centrex) Port Combo-Non-Design					14.13										
	2W VG Loop/2W VG Port (Centrex)Port Combo-Non-Design					24.75										
	2W VG Loop/2W VG Port (Centrex)Port Combo-Non-Design					50.62										
UNE Port/Loop Combination Rates (Design)																
	2W VG Loop/2W VG Port (Centrex) Port Combo-Design					17.29										
	2W VG Loop/2W VG Port (Centrex)Port Combo-Design					27.71										
	2W VG Loop/2W VG Port (Centrex)Port Combo-Design					49.26										
UNE Loop Rate																
	2W VG Loop (SL 1)-Zone 1		1	UEP9D	UECS1	11.77										
	2W VG Loop (SL 1)-Zone 2		2	UEP9D	UECS1	22.39										

CATEGORY	RATE ELEMENTS	Interim	Zone	BCS	USOC	RATES($)					Svc Order Submitted Elec per LSR	Svc Order Submitted Manually per LSR	Incremental Charge - Manual Svc Order vs. Electronic-1st	Incremental Charge - Manual Svc Order vs. Electronic-Add'l	Incremental Charge - Manual Svc Order vs. Electronic-Disc 1st	Incremental Charge - Manual Svc Order vs. Electronic-Disc Add'l
							Nonrecurring		NRC Disconnect		OSS Rates($)					
						Rec	First	Add'l	First	Add'l	SOMEC	SOMAN	SOMAN	SOMAN	SOMAN	SOMAN
	2W VG Loop (SL 1)-Zone 3		3	UEP9D	UECS1	48.26										
	2W VG Loop (SL 2)-Zone 1		1	UEP9D	UECS2	14.93										
	2W VG Loop (SL 2)-Zone 2		2	UEP9D	UECS2	25.35										
	2W VG Loop (SL 2)-Zone 3		3	UEP9D	UECS2	50.46										
UNE Port Rate																
ALL STATES																
	2W VG Port (Centrex) Basic Local Area			UEP9D	UEPYA	2.36	38.85	19.08								
	2W VG Port (Centrex 800 termination)Basic Local Area			UEP9D	UEPYB	2.36	38.85	19.08								
	2W VG Port (Centrex/EBS-PSET)3Basic Local Area			UEP9D	UEPYC	2.36	38.85	19.08								
	2W VG Port (Centrex /EBS-M5009)3Basic Local Area			UEP9D	UEPYD	2.36	38.85	19.08								
	2W VG Port (Centrex /EBS-M5209))3 Basic Local Area			UEP9D	UEPYE	2.36	38.85	19.08								
	2W VG Port (Centrex /EBS-M5112))3 Basic Local Area			UEP9D	UEPYF	2.36	38.85	19.08								
	2W VG Port (Centrex /EBS-M5312))3Basic Local Area			UEP9D	UEPYG	2.36	38.85	19.08								
	2W VG Port (Centrex /EBS-M5008))3 Basic Local Area			UEP9D	UEPYT	2.36	38.85	19.08								
	2W VG Port (Centrex/EBS-M5208))3 Basic Local Area			UEP9D	UEPYU	2.36	38.85	19.08								
	2W VG Port (Centrex/EBS-M5216))3 Basic Local Area			UEP9D	UEPYV	2.36	38.85	19.08								
	2W VG Port (Centrex/EBS-M5316))3 Basic Local Area			UEP9D	UEPY3	2.36	38.85	19.08								
	2W VG Port (Centrex with Caller ID) Basic Local Area			UEP9D	UEPYH	2.36	38.85	19.08								
	2W VG Port (Centrex/Caller ID/Msg Wtg Lamp Indication))4 Basic Local Area			UEP9D	UEPYW	2.36	38.85	19.08								
	2W VG Port (Centrex/Msg Wtg Lamp Indication))4 Basic Local Area			UEP9D	UEPYJ	2.36	38.85	19.08								
	2W VG Port (Centrex from diff SWC) 2,3-Basic Local Area			UEP9D	UEPYM	2.36	104.41	67.93								
	2W VG Port (Centrex/differ SWC /EBS-PSET)2,3,4 Basic Local Area			UEP9D	UEPYO	2.36	104.41	67.93								
	2W VG Port (Centrex/differ SWC /EBS-M5009)2,3,4 Basic Local Area			UEP9D	UEPYP	2.36	104.41	67.93								
	2W VG Port (Centrex/differ SWC /EBS-5209)2,3,4 Basic Local Area			UEP9D	UEPYQ	2.36	104.41	67.93								
	2W VG Port (Centrex/differ SWC /EBS-M5112)2,3,4 Basic Local Area			UEP9D	UEPYR	2.36	104.41	67.93								
	2W VG Port (Centrex/differ SWC /EBS-M5312)2,3,4 Basic Local Area			UEP9D	UEPYS	2.36	104.41	67.93								
	2W VG Port (Centrex/differ SWC /EBS-M5008)2,3,4 Basic Local Area			UEP9D	UEPY4	2.36	104.41	67.93								
	2W VG Port (Centrex/differ SWC /EBS-M5208)2, 3 Basic Local Area			UEP9D	UEPY5	2.36	104.41	67.93								
	2W VG Port (Centrex/differ SWC /EBS-M5216)2,3,4 Basic Local Area			UEP9D	UEPY6	2.36	104.41	67.93								
	2W VG Port (Centrex/differ SWC /EBS-M5316)2,3,4 Basic Local Area			UEP9D	UEPY7	2.36	104.41	67.93								
	2W VG Port, Diff SWC-800 Service Term 2,3			UEP9D	UEPYZ	2.36	104.41	67.93								
	2W VG Port terminated in on Megalink or equivalent Basic Local Area			UEP9D	UEPY9	2.36	38.85	19.08								
	2W VG Port Terminated on 800 Service Term Basic Local Area			UEP9D	UEPY2	2.36	38.85	19.08								
AL, KY, LA, MS, SC, & TN Only																
	2W VG Port (Centrex)			UEP9D	UEPQA	2.36	38.85	19.08								
	2W VG Port (Centrex 800 termination)			UEP9D	UEPQB	2.36	38.85	19.08								
	2W VG Port (Centrex/EBS-PSET)4			UEP9D	UEPQC	2.36	38.85	19.08								
	2W VG Port (Centrex /EBS-M5009)4			UEP9D	UEPQD	2.36	38.85	19.08								
	2W VG Port (Centrex /EBS-M5209)4			UEP9D	UEPQE	2.36	38.85	19.08								
	2W VG Port (Centrex /EBS-M5112)4			UEP9D	UEPQF	2.36	38.85	19.08								
	2W VG Port (Centrex /EBS-M5312)4			UEP9D	UEPQG	2.36	38.85	19.08								
	2W VG Port (Centrex /EBS-M5008)4			UEP9D	UEPQT	2.36	38.85	19.08								
	2W VG Port (Centrex/EBS-M5208)4			UEP9D	UEPQU	2.36	38.85	19.08								
	2W VG Port (Centrex/EBS-M5216)4			UEP9D	UEPQV	2.36	38.85	19.08								
	2W VG Port (Centrex/EBS-M5316)4			UEP9D	UEPQ3	2.36	38.85	19.08								
	2W VG Port (Centrex with Caller ID)			UEP9D	UEPQH	2.36	38.85	19.08								
	2W VG Port (Centrex/Caller ID/Msg Wtg Lamp Indication)4			UEP9D	UEPQW	2.36	38.85	19.08								
	2W VG Port (Centrex/Msg Wtg Lamp Indication)4			UEP9D	UEPQJ	2.36	38.85	19.08								
	2W VG Port (Centrex from diff SWC) 2,3			UEP9D	UEPQM	2.36	104.41	67.93								
	2W VG Port (Centrex/differ SWC /EBS-PSET)2,3,4			UEP9D	UEPQO	2.36	104.41	67.93								
	2W VG Port (Centrex/differ SWC /EBS-M5009)2,3,4			UEP9D	UEPQP	2.36	104.41	67.93								

CATEGORY	RATE ELEMENTS	Interim	Zone	BCS	USOC	RATES($)					Svc Order Submitted Elec per LSR	Svc Order Submitted Manually per LSR	Incremental Charge - Manual Svc Order vs. Electronic-1st	Incremental Charge - Manual Svc Order vs. Electronic-Add'l	Incremental Charge - Manual Svc Order vs. Electronic-Disc 1st	Incremental Charge - Manual Svc Order vs. Electronic-Disc Add'l
							Nonrecurring		NRC Disconnect		OSS Rates($)					
						Rec	First	Add'l	First	Add'l	SOMEC	SOMAN	SOMAN	SOMAN	SOMAN	SOMAN
	2W VG Port (Centrex/differ SWC /EBS-5209)2,3,4			UEP9D	UEPQQ	2.36	104.41	67.93								
	2W VG Port (Centrex/differ SWC /EBS-M5112)2,3,4			UEP9D	UEPQR	2.36	104.41	67.93								
	2W VG Port (Centrex/differ SWC /EBS-M5312)2,3,4			UEP9D	UEPQS	2.36	104.41	67.93								
	2W VG Port (Centrex/differ SWC /EBS-M5008)2,3,4			UEP9D	UEPQ4	2.36	104.41	67.93								
	2W VG Port (Centrex/differ SWC /EBS-M5208)2,3,4			UEP9D	UEPQ5	2.36	104.41	67.93								
	2W VG Port (Centrex/differ SWC /EBS-M5216)2,3,4			UEP9D	UEPQ6	2.36	104.41	67.93								
	2W VG Port (Centrex/differ SWC /EBS-M5316)2,3,4			UEP9D	UEPQ7	2.36	104.41	67.93								
	2W VG Port, Diff SWC-800 Service Term 2,3			UEP9D	UEPQZ	2.36	104.41	67.93								
	2W VG Port terminated in on Megalink or equivalent			UEP9D	UEPQ9	2.36	38.85	19.08								
	2W VG Port Terminated on 800 Service Term			UEP9D	UEPQ2	2.36	38.85	19.08								
Local Switching																
	Centrex Intercom Funtionality, per port			UEP9D	URECS	0.8577										
Features																
	All Standard Features Offered, per port			UEP9D	UEPVF	0.00										
	All Select Features Offered, per port			UEP9D	UEPVS	0.00	412.25									
	All Centrex Control Features Offered, per port			UEP9D	UEPVC	0.00										
NARS																
	Unbundled Network Access Register-Combination			UEP9D	UARCX	0.00	0.00	0.00	0.00	0.00						
	Unbundled Network Access Register-Inward			UEP9D	UAR1X	0.00	0.00	0.00	0.00	0.00						
	Unbundled Network Access Register-Outdial			UEP9D	UAROX	0.00	0.00	0.00	0.00	0.00						
Misc Terminations																
2-Wire Trunk Side																
	Trunk Side Terminations, each			UEP9D	CEND6	8.29	115.85	18.20								
4-Wire Digital (1.544 Megabits)																
	DS1 Circuit Terminations, each			UEP9D	M1HD1	68.47	196.18	98.62								
	DS0 Channels Activiated per Channel			UEP9D	M1HDO	0.00	14.06									
Interoffice Channel Mileage - 2-Wire																
	Interoffice Channel Facilities Termination			UEP9D	M1GBC	22.60	39.36	26.62								
	Interoffice Channel mileage, per mile or fraction of mile			UEP9D	M1GBM	0.013										
Feature Activations (DS0) Centrex Loops on Channelized DS1 Service																
D4 Channel Bank Feature Activations																
	Feature Activation on D-4 Channel Bank Centrex Loop Slot			UEP9D	1PQWS	0.6497										
	Feature Activation on D-4 Channel Bank FX line Side Loop Slot			UEP9D	1PQW6	0.6497										
	Feature Activation on D-4 Channel Bank FX Trunk Side Loop Slot			UEP9D	1PQW7	0.6497										
	Feature Activation on D-4 Channel Bank Centrex Loop Slot-Different WC			UEP9D	1PQWP	0.6497										
	Feature Activation on D-4 Channel Bank Private Line Loop Slot			UEP9D	1PQWV	0.6497										
	Feature Activation on D-4 Channel Bank Tjie Line/Trunk Loop Slot			UEP9D	1PQWQ	0.6497										
	Feature Activation on D-4 Channel Bank WATS Loop Slot			UEP9D	1PQWA	0.6497										
Non-Recurring Charges (NRC) Associated with UNE-P Centrex																
	NRC Conversion Currently Combined Switch-As-Is with allowed changes, per port			UEP9D	USAC2		0.10	0.10								
	Conversion of existing Centrex Common Block, each			UEP9D	USACN		36.66	16.10								
	New Centrex Standard Common Block			UEP9D	M1ACS	0.00	680.40									
	New Centrex Customized Common Block			UEP9D	M1ACC	0.00	680.40									
	NAR Establishment Charge, Per Occasion			UEP9D	URECA	0.00	73.93									
Additional Non-Recurring Charges (NRC)																
	Unbundled Misc Rate Element, Tag Loop at End Use Premise			UEP9D	URETL		8.33	0.83								
	Unbundled Misc Rate Element, Tag Design Loop at End Use Premise			UEP9D	URETN		11.20	1.10								
UNE-P CENTREX - EWSD (Valid in AL, FL, KY, LA, MS & TN)																
2-Wire VG Loop/2-Wire Voice Grade Port (Centrex) Combo																
UNE Port/Loop Combination Rates (Non-Design)																
	2W VG Loop/2W VG Port (Centrex) Port Combo-Non-Design					14.13										
	2W VG Loop/2W VG Port (Centrex)Port Combo-Non-Design					24.75										
	2W VG Loop/2W VG Port (Centrex)Port Combo-Non-Design					50.62										
UNE Port/Loop Combination Rates (Design)																
	2W VG Loop/2W VG Port (Centrex) Port Combo-Design					17.29										
	2W VG Loop/2W VG Port (Centrex)Port Combo-Design					27.71										

UNBUNDLED NETWORK ELEMENTS - Louisiana														Attachment: 2 Exh A			
CATEGORY		RATE ELEMENTS	Interim	Zone	BCS	USOC	RATES($)					Svc Order Submitted Elec per LSR	Svc Order Submitted Manually per LSR	Incremental Charge - Manual Svc Order vs. Electronic-1st	Incremental Charge - Manual Svc Order vs. Electronic-Add'l	Incremental Charge - Manual Svc Order vs. Electronic-Disc 1st	Incremental Charge - Manual Svc Order vs. Electronic-Disc Add'l
								Nonrecurring		NRC Disconnect		OSS Rates($)					
							Rec	First	Add'l	First	Add'l	SOMEC	SOMAN	SOMAN	SOMAN	SOMAN	SOMAN
		2W VG Loop/2W VG Port (Centrex)Port Combo-Design					49.26										
	UNE Loop Rate																
		2W VG Loop (SL 1)-Zone 1		1	UEP9E	UECS1	11.77										
		2W VG Loop (SL 1)-Zone 2		2	UEP9E	UECS1	22.39										
		2W VG Loop (SL 1)-Zone 3		3	UEP9E	UECS1	48.26										
		2W VG Loop (SL 2)-Zone 1		1	UEP9E	UECS2	14.93										
		2W VG Loop (SL 2)-Zone 2		2	UEP9E	UECS2	25.35										
		2W VG Loop (SL 2)-Zone 3		3	UEP9E	UECS2	50.46										
	UNE Port Rate																
	AL, FL, KY, LA, MS, & TN only																
		2W VG Port (Centrex) Basic Local Area			UEP9E	UEPYA	2.36	38.85	19.08								
		2W VG Port (Centrex 800 termination)Basic Local Area			UEP9E	UEPYB	2.36	38.85	19.08								
		2W VG Port (Centrex with Caller ID)1Basic Local Area			UEP9E	UEPYH	2.36	38.85	19.08								
		2W VG Port (Centrex from diff SWC)2,3 Basic Local Area			UEP9E	UEPYM	2.36	104.41	67.93								
		2W VG Port, Diff SWC 2,3-800 Service Term-Basic Local Area			UEP9E	UEPYZ	2.36	104.41	67.93								
		2W VG Port terminated in on Megalink or equivalent-Basic Local Area			UEP9E	UEPY9	2.36	38.85	19.08								
		2W VG Port Terminated on 800 Service Term-Basic Local Area			UEP9E	UEPY2	2.36	38.85	19.08								
	AL, KY, LA, MS, & TN Only																
		2W VG Port (Centrex)			UEP9E	UEPQA	2.36	38.85	19.08								
		2W VG Port (Centrex 800 termination)			UEP9E	UEPQB	2.36	38.85	19.08								
		2W VG Port (Centrex with Caller ID)1			UEP9E	UEPQH	2.36	38.85	19.08								
		2W VG Port (Centrex from diff SWC)2,3			UEP9E	UEPQM	2.36	104.41	67.93								
		2W VG Port, Diff SWC 2,3 -800 Service Term			UEP9E	UEPQZ	2.36	104.41	67.93								
		2W VG Port terminated in on Megalink or equivalent			UEP9E	UEPQ9	2.36	38.85	19.08								
		2W VG Port Terminated on 800 Service Term			UEP9E	UEPQ2	2.36	38.85	19.08								
	Local Switching																
		Centrex Intercom Funtionality, per port			UEP9E	URECS	0.8577										
	Features																
		All Standard Features Offered, per port			UEP9E	UEPVF	0.00										
		All Select Features Offered, per port			UEP9E	UEPVS	0.00	412.25									
		All Centrex Control Features Offered, per port			UEP9E	UEPVC	0.00										
	NARS																
		Unbundled Network Access Register-Combination			UEP9E	UARCX	0.00	0.00	0.00	0.00	0.00						
		Unbundled Network Access Register-Indial			UEP9E	UAR1X	0.00	0.00	0.00	0.00	0.00						
		Unbundled Network Access Register-Outdial			UEP9E	UAROX	0.00	0.00	0.00	0.00	0.00						
	Misc Terminations																
	2-Wire Trunk Side																
		Trunk Side Terminations, each			UEP9E	CEND6	8.29	115.85	18.20								
	4-Wire Digital (1.544 Megabits)																
		DS1 Circuit Terminations, each			UEP9E	M1HD1	68.47	196.18	92.92								
		DS0 Channel Activated Per Channel			UEP9E	M1HDO	0.00	14.06									
	Interoffice Channel Mileage - 2-Wire																
		Interoffice Channel Facilities Termination			UEP9E	M1GBC	22.60	39.36	26.62								
		Interoffice Channel mileage, per mile or fraction of mile			UEP9E	M1GBM	0.013										
	Feature Activations (DS0) Centrex Loops on Channelized DS1 Service																
	D4 Channel Bank Feature Activations																
		Feature Activation on D-4 Channel Bank Centrex Loop Slot			UEP9E	1PQWS	0.6497										
		Feature Activation on D-4 Channel Bank FX line Side Loop Slot			UEP9E	1PQW6	0.6497										
		Feature Activation on D-4 Channel Bank FX Trunk Side Loop Slot			UEP9E	1PQW7	0.6497										
		Feature Activation on D-4 Channel Bank Centrex Loop Slot-Different WC			UEP9E	1PQWP	0.6497										
		Feature Activation on D-4 Channel Bank Private Line Loop Slot			UEP9E	1PQWV	0.6497										
		Feature Activation on D-4 Channel Bank Tjie Line/Trunk Loop Slot			UEP9E	1PQWQ	0.6497										
		Feature Activation on D-4 Channel Bank WATS Loop Slot			UEP9E	1PQWA	0.6497										
	Non-Recurring Charges (NRC) Associated with UNE-P Centrex																
		NRC Conversion Currently Combined Switch-As-Is with allowed changes, per port			UEP9E	USAC2		0.10	0.10								
		Conversion of Existing Centrex Common Block, each			UEP9E	USACN		36.66	16.10								

UNBUNDLED NETWORK ELEMENTS - Louisiana														Attachment: 2 Exh A			
CATEGORY		RATE ELEMENTS	Interim	Zone	BCS	USOC	RATES($)					Svc Order Submitted Elec per LSR	Svc Order Submitted Manually per LSR	Incremental Charge - Manual Svc Order vs. Electronic-1st	Incremental Charge - Manual Svc Order vs. Electronic-Add'l	Incremental Charge - Manual Svc Order vs. Electronic-Disc 1st	Incremental Charge - Manual Svc Order vs. Electronic-Disc Add'l
								Nonrecurring		NRC Disconnect		OSS Rates($)					
							Rec	First	Add'l	First	Add'l	SOMEC	SOMAN	SOMAN	SOMAN	SOMAN	SOMAN
		New Centrex Standard Common Block			UEP9E	M1ACS	0.00	680.40									
		New Centrex Customized Common Block			UEP9E	M1ACC	0.00	680.40									
		NAR Establishment Charge, Per Occasion			UEP9E	URECA	0.00	73.93									
	Additional Non-Recurring Charges (NRC)																
		Unbundled Misc Rate Element, Tag Loop at End Use Premise			UEP9E	URETL		8.33	0.83								
		Unbundled Misc Rate Element, Tag Design Loop at End Use Premise			UEP9E	URETN		11.20	1.10								
	UNE-P CENTREX - DCO - Valid in AL, KY, LA, MS, & TN)																
	2-Wire VG Loop/2-Wire Voice Grade Port (Centrex) Combo																
	UNE Port/Loop Combination Rates (Non-Design)																
		2W VG Loop/2W VG Port (Centrex) Port Combo-Non-Design					14.13										
		2W VG Loop/2W VG Port (Centrex)Port Combo-Non-Design					24.75										
		2W VG Loop/2W VG Port (Centrex)Port Combo-Non-Design					50.62										
	UNE Port/Loop Combination Rates (Design)																
		2W VG Loop/2W VG Port (Centrex) Port Combo-Design					17.29										
		2W VG Loop/2W VG Port (Centrex)Port Combo-Design					27.71										
		2W VG Loop/2W VG Port (Centrex)Port Combo-Design					49.26										
	UNE Loop Rate																
		2W VG Loop (SL 1)-Zone 1		1	UEP93	UECS1	11.77										
		2W VG Loop (SL 1)-Zone 2		2	UEP93	UECS1	22.36										
		2W VG Loop (SL 1)-Zone 3		3	UEP93	UECS1	48.26										
		2W VG Loop (SL 2)-Zone 1		1	UEP93	UECS2	14.93										
		2W VG Loop (SL 2)-Zone 2		2	UEP93	UECS2	25.35										
		2W VG Loop (SL 2)-Zone 3		3	UEP93	UECS2	50.46										
	UNE Port Rate																
	AL, KY, LA, MS, & TN only																
		2W VG Port (Centrex) Basic Local Area			UEP93	UEPYA	2.36	38.85	19.08								
		2W VG Port (Centrex 800 termination)Basic Local Area			UEP93	UEPYB	2.36	38.85	19.08								
		2W VG Port (Centrex with Caller ID)1Basic Local Area			UEP93	UEPYH	2.36	38.85	19.08								
		2W VG Port (Centrex from diff SWC)2,3 Basic Local Area			UEP93	UEPYM	2.36	104.41	67.93								
		2W VG Port, Diff SWC-2,3-800 Service Term-Basic Local Area			UEP93	UEPYZ	2.36	104.41	67.93								
		2W VG Port terminated in on Megalink or equivalent-Basic Local Area			UEP93	UEPY9	2.36	38.85	19.08								
		2W VG Port Terminated on 800 Service Term-Basic Local Area			UEP93	UEPY2	2.36	38.85	19.08								
		2W VG Port (Centrex)			UEP93	UEPQA	2.36	38.85	19.08								
		2W VG Port (Centrex 800 termination)			UEP93	UEPQB	2.36	38.85	19.08								
		2W VG Port (Centrex with Caller ID)1			UEP93	UEPQH	2.36	38.85	19.08								
		2W VG Port (Centrex from diff SWC)2,3			UEP93	UEPQM	2.36	104.41	67.93								
		2W VG Port, Diff SWC-2,3 -800 Service Term			UEP93	UEPQZ	2.36	104.41	67.93								
		2W VG Port terminated in on Megalink or equivalent			UEP93	UEPQ9	2.36	38.85	19.08								
		2W VG Port Terminated on 800 Service Term			UEP93	UEPQ2	2.36	38.85	19.08								
	Local Switching																
		Centrex Intercom Funtionality, per port			UEP93	URECS	0.8577										
	Features																
		All Standard Features Offered, per port			UEP93	UEPVF	0.00	73.93	27.14								
		All Centrex Control Features Offered, per port			UEP93	UEPVC	0.00	73.93	27.14								
	NARS																
		Unbundled Network Access Register-Combination			UEP93	UARCX	0.00	0.00	0.00	0.00	0.00						
		Unbundled Network Access Register-Indial			UEP93	UAR1X	0.00	0.00	0.00	0.00	0.00						
		Unbundled Network Access Register-Outdial			UEP93	UAROX	0.00	0.00	0.00	0.00	0.00						
	Misc Terminations																
	2-Wire Trunk Side																
		Trunk Side Terminations, each			UEP93	CEND6	8.27	115.85	18.20								
	4-Wire Digital (1.544 Megabits)																
		DS1 Circuit Terminations, each			UEP93	M1HD1	68.47	196.18	92.92								
		DS0 Channels Activated, Per Channel			UEP93	M1HDO	0.00	14.06									
	Interoffice Channel Mileage - 2-Wire																
		Interoffice Channel Facilities Termination			UEP93	M1GBC	22.60	39.36	26.62								
		Interoffice Channel mileage, per mile or fraction of mile			UEP93	M1GBM	0.013										

UNBUNDLED NETWORK ELEMENTS - Louisiana														Attachment: 2 Exh A			
CATEGORY	RATE ELEMENTS	Interim	Zone	BCS	USOC	RATES($)					Svc Order Submitted Elec per LSR	Svc Order Submitted Manually per LSR	Incremental Charge - Manual Svc Order vs. Electronic-1st	Incremental Charge - Manual Svc Order vs. Electronic-Add'l	Incremental Charge - Manual Svc Order vs. Electronic-Disc 1st	Incremental Charge - Manual Svc Order vs. Electronic-Disc Add'l
							Nonrecurring		NRC Disconnect		OSS Rates($)					
						Rec	First	Add'l	First	Add'l	SOMEC	SOMAN	SOMAN	SOMAN	SOMAN	SOMAN
	Feature Activations (DS0) Centrex Loops on Channelized DS1 Service															
	D4 Channel Bank Feature Activations															
	Feature Activation on D-4 Channel Bank Centrex Loop Slot			UEP93	1PQWS	0.6497										
	Feature Activation on D-4 Channel Bank FX Line Side Loop Slot			UEP93	1PQW6	0.6497										
	Feature Activation on D-4 Channel Bank FX Trunk Side Loop Slot			UEP93	1PQW7	0.6497										
	Feature Activation on D-4 Channel Bank Centrex Loop Slot-Different WC			UEP93	1PQWP	0.6497										
	Feature Activation on D-4 Channel Bank Private Line Loop Slot			UEP93	1PQWV	0.6497										
	Feature Activation on D-4 Channel Bank Tie Line/Trunk Loop Slot			UEP93	1PQWQ	0.6497										
	Feature Activation on D-4 Channel Bank WATS Loop Slot			UEP93	1PQWA	0.6497										
	Non-Recurring Charges (NRC) Associated with UNE-P Centrex															
	NRC Conversion Currently Combined Switch-As-Is with allowed changes, per port			UEP93	USAC2		0.10	0.10								
	Conversion of Existing Centrex Common Block, each			UEP93	USACN		36.66	16.10								
	New Centrex Standard Common Block			UEP93	M1ACS	0.00	680.40									
	New Centrex Customized Common Block			UEP93	M1ACC	0.00	680.40									
	NAR Establishment Charge, Per Occasion			UEP93	URECA	0.00	73.93									
	Additional Non-Recurring Charges (NRC)															
	Unbundled Misc Rate Element, Tag Loop at End Use Premise			UEP93	URETL		8.33	0.83								
	Unbundled Misc Rate Element, Tag Design Loop at End Use Premise			UEP93	URETN		11.20	1.10								
	Note 1 - Required Port for Centrex Control in 1AESS, 5ESS & EWSD															
	Note 2 - Requres Interoffice Channel Mileage															
	Note 3 - Installation is combination of Installation charge for SL2 Loop and Port															
	Note 4 - Requires Specific Customer Premises Equipment															
	Note: Rates displaying an "I" in Interim column are interim as a result of a Commission order.															

UNBUNDLED NETWORK ELEMENTS - Mississippi														Attachment: 2 Exh A			
CATEGORY	RATE ELEMENTS	Interim	Zone	BCS	USOC	RATES($)					Svc Order Submitted Elec per LSR	Svc Order Submitted Manually per LSR	Incremental Charge - Manual Svc Order vs. Electronic-1st	Incremental Charge - Manual Svc Order vs. Electronic-Add'l	Incremental Charge - Manual Svc Order vs. Electronic-Disc 1st	Incremental Charge - Manual Svc Order vs. Electronic-Disc Add'l
							Nonrecurring		NRC Disconnect		OSS Rates($)					
						Rec	First	Add'l	First	Add'l	SOMEC	SOMAN	SOMAN	SOMAN	SOMAN	SOMAN
	The "Zone" shown in the sections for stand-alone loops or loops as part of a combination refers to Geographically Deaveraged UNE Zones. To view Geographically Deaveraged UNE Zone Designations by Central Office, refer to internet Website: http://www.interconnection.bellsouth.com/become_a_clec/html/interconnection.htm															
OPERATIONS SUPPORT SYSTEMS (OSS) - "REGIONAL RATES"																
	NOTE: (1) CLEC should contact its contract negotiator if it prefers the "state specific" OSS charges as ordered by the State Commissions. The OSS charges currently contained in this rate exhibit are the BellSouth "regional" service ordering charges. CLEC may elect either the state specific Commission ordered rates for the service ordering charges, or CLEC may elect the regional service ordering charge, however, CLEC can not obtain a mixture of the two regardless if CLEC has a interconnection															
	NOTE: (2) Any element that can be ordered electronically will be billed according to the SOMEC rate listed in this category. Please refer to BellSouth's Local Ordering Handbook (LOH) to determine if a product can be ordered electronically. For those elements that cannot be ordered electronically at present per the LOH, the listed SOMEC rate in this category reflects the charge that would be billed to a CLEC once electronic ordering capabilities come on-line for that element. Otherwise, the manual															
	OSS-Electronic Service Order Charge, Per Local Service Request (LSR)-UNE Only				SOMEC		3.50	0.00	3.50	0.00						
	OSS-Manual Service Order Charge, Per Local Service Request (LSR)-UNE Only				SOMAN		15.75	0.00	1.97	0.00						
UNE SERVICE DATE ADVANCEMENT CHARGE																
	NOTE: The Expedite charge will be maintained commensurate with BellSouth's FCC No.1 Tariff, Section 5 as applicable.															
	UNE Expedite Charge per Circuit or Line Assignable USOC, per Day			UAL, UEANL, UCL, UEF, UDF, UEQ, UDL, UENTW, UDN, UEA, UHL, ULC, USL, U1T12, U1T48, U1TD1, U1TD3, U1TDX, U1TO3, U1TS1, U1TVX, UC1BC, UC1BL, UC1CC, UC1CL, UC1DC, UC1DL, UC1EC, UC1EL, UC1FC, UC1FL, UC1GC, UC1GL, UC1HC, UC1HL, UDL12, UDL48, UDLO3, UDLSX, UE3, ULD12, ULD48, ULDD1, ULDD3, ULDDX, ULDO3, ULDS1, ULDVX, UNC1X, UNC3X, UNCDX, UNCNX, UNCSX, UNCVX, UNLD1, UNLD3, UXTD1, UXTD3, UXTS1, U1TUC, U1TUD, U1TUB, U1TUA,NTCVG, NTCUD, NTCD1	SDASP		200.00									
ORDER MODIFICATION CHARGE																
	Order Modification Charge (OMC)						26.21	0.00	0.00	0.00						
	Order Modification Additional Dispatch Charge (OMCAD)						150.00	0.00	0.00	0.00						
UNBUNDLED EXCHANGE ACCESS LOOP																
	2-WIRE ANALOG VOICE GRADE LOOP															
	2W Analog VG Loop- SL2 w/Loop or Ground Start Signaling-Zone 1		1	UEA	UEAL2	13.89	105.96	68.28	52.82	10.37						
	2W Analog VG Loop- SL2 w/Loop or Ground Start Signaling-Zone 2		2	UEA	UEAL2	18.75	105.96	68.28	52.82	10.37						
	2W Analog VG Loop- SL2 w/Loop or Ground Start Signaling-Zone 3		3	UEA	UEAL2	27.55	105.96	68.28	52.82	10.37						
	2W Analog VG Loop- SL2 w/Loop or Ground Start Signaling-Zone 4		4	UEA	UEAL2	45.72	105.96	68.28	52.82	10.37						
	2W Analog VG Loop- SL2 w/Reverse Battery Signaling-Zone 1		1	UEA	UEAR2	13.89	105.96	68.28	52.82	10.37						
	2W Analog VG Loop- SL2 w/Reverse Battery Signaling-Zone 2		2	UEA	UEAR2	18.75	105.96	68.28	52.82	10.37						
	2W Analog VG Loop- SL2 w/Reverse Battery Signaling-Zone 3		3	UEA	UEAR2	27.55	105.96	68.28	52.82	10.37						
	2W Analog VG Loop- SL2 w/Reverse Battery Signaling-Zone 4		4	UEA	UEAR2	45.72	105.96	68.28	52.82	10.37						
	Switch-As-Is Conversion rate per UNE Loop, Single LSR, (per DS0)			UEA	URESL		25.01	3.53								

UNBUNDLED NETWORK ELEMENTS - Mississippi														Attachment: 2 Exh A			
CATEGORY		RATE ELEMENTS	Interim	Zone	BCS	USOC	RATES($)					Svc Order Submitted Elec per LSR	Svc Order Submitted Manually per LSR	Incremental Charge - Manual Svc Order vs. Electronic-1st	Incremental Charge - Manual Svc Order vs. Electronic-Add'l	Incremental Charge - Manual Svc Order vs. Electronic-Disc 1st	Incremental Charge - Manual Svc Order vs. Electronic-Disc Add'l
								Nonrecurring		NRC Disconnect		OSS Rates($)					
							Rec	First	Add'l	First	Add'l	SOMEC	SOMAN	SOMAN	SOMAN	SOMAN	SOMAN
		Switch-As-Is Conversion rate per UNE Loop, Spreadsheet, (per DS0)			UEA	URESP		26.50	5.02								
		CLEC to CLEC Conversion Charge w/o outside dispatch			UEA	UREWO		87.56	36.29								
		Loop Tagging-SL2 (SL2)			UEA	URETL		11.19	1.10								
	4-WIRE ANALOG VOICE GRADE LOOP																
		4W Analog VG Loop-Zone 1		1	UEA	UEAL4	27.47	132.27	94.59	60.68	14.64						
		4W Analog VG Loop-Zone 2		2	UEA	UEAL4	38.26	132.27	94.59	60.68	14.64						
		4W Analog VG Loop-Zone 3		3	UEA	UEAL4	50.03	132.27	94.59	60.68	14.64						
		4W Analog VG Loop-Zone 4		4	UEA	UEAL4	50.03	132.27	94.59	60.68	14.64						
		Switch-As-Is Conversion rate per UNE Loop, Single LSR, (per DS0)			UEA	URESL		25.01	3.53								
		Switch-As-Is Conversion rate per UNE Loop, Spreadsheet, (per DS0)			UEA	URESP		26.50	5.02								
		CLEC to CLEC Conversion Charge w/o outside dispatch			UEA	UREWO		87.56	36.29								
	2-WIRE ISDN DIGITAL GRADE LOOP																
		2W ISDN Digital Grade Loop-Zone 1		1	UDN	U1L2X	21.01	117.61	79.92	52.82	10.37						
		2W ISDN Digital Grade Loop-Zone 2		2	UDN	U1L2X	27.59	117.61	79.92	52.82	10.37						
		2W ISDN Digital Grade Loop-Zone 3		3	UDN	U1L2X	37.34	117.61	79.92	52.82	10.37						
		2W ISDN Digital Grade Loop-Zone 4		4	UDN	U1L2X	59.18	117.61	79.92	52.82	10.37						
		CLEC to CLEC Conversion Charge w/o outside dispatch			UDN	UREWO		91.46	44.07								
	2-WIRE ASYMMETRICAL DIGITAL SUBSCRIBER LINE (ADSL) COMPATIBLE LOOP																
		2W Unbundled ADSL Loop including manual service inquiry & facility reservation-Zone 1		1	UAL	UAL2X	11.11	121.27	70.81	50.38	7.93						
		2W Unbundled ADSL Loop including manual service inquiry & facility reservation-Zone 2		2	UAL	UAL2X	11.47	121.27	70.81	50.38	7.93						
		2W Unbundled ADSL Loop including manual service inquiry & facility reservation-Zone 3		3	UAL	UAL2X	11.74	121.27	70.81	50.38	7.93						
		2W Unbundled ADSL Loop including manual service inquiry & facility reservation-Zone 4		4	UAL	UAL2X	12.69	121.27	70.81	50.38	7.93						
		2W Unbundled ADSL Loop w/o manual service inquiry & facility reservaton-Zone 1		1	UAL	UAL2W	11.11	96.15	58.03	50.38	7.93						
		2W Unbundled ADSL Loop w/o manual service inquiry & facility reservaton-Zone 2		2	UAL	UAL2W	11.47	96.15	58.03	50.38	7.93						
		2W Unbundled ADSL Loop w/o manual service inquiry & facility reservaton-Zone 3		3	UAL	UAL2W	11.74	96.15	58.03	50.38	7.93						
		2W Unbundled ADSL Loop w/o manual service inquiry & facility reservaton-Zone 4		4	UAL	UAL2W	12.69	96.15	58.03	50.38	7.93						
		CLEC to CLEC Conversion Charge w/o outside dispatch			UAL	UREWO		86.04	40.33								
	2-WIRE HIGH BIT RATE DIGITAL SUBSCRIBER LINE (HDSL) COMPATIBLE LOOP																
		2W Unbundled HDSL Loop including manual service inquiry & facility reservation-Zone 1		1	UHL	UHL2X	8.75	129.98	79.52	50.38	7.93						
		2W Unbundled HDSL Loop including manual service inquiry & facility reservation-Zone 2		2	UHL	UHL2X	9.22	129.98	79.52	50.38	7.93						
		2W Unbundled HDSL Loop including manual service inquiry & facility reservation-Zone 3		3	UHL	UHL2X	9.87	129.98	79.52	50.38	7.93						
		2W Unbundled HDSL Loop including manual service inquiry & facility reservation-Zone 4		4	UHL	UHL2X	10.46	129.98	79.52	50.38	7.93						
		2W Unbundled HDSL Loop w/o manual service inquiry and facility reservation-Zone 1		1	UHL	UHL2W	8.75	104.86	66.74	50.38	7.93						
		2W Unbundled HDSL Loop w/o manual service inquiry and facility reservation-Zone 2		2	UHL	UHL2W	9.22	104.86	66.74	50.38	7.93						
		2W Unbundled HDSL Loop w/o manual service inquiry and facility reservation-Zone 3		3	UHL	UHL2W	9.87	104.86	66.74	50.38	7.93						
		2W Unbundled HDSL Loop w/o manual service inquiry and facility reservation-Zone 4		4	UHL	UHL2W	10.46	104.86	66.74	50.38	7.93						
		CLEC to CLEC Conversion Charge w/o outside dispatch			UHL	UREWO		85.98	40.33								
	4-WIRE HIGH BIT RATE DIGITAL SUBSCRIBER LINE (HDSL) COMPATIBLE LOOP																
		4 Wire Unbundled HDSL Loop including manual service inquiry and facility reservation-Zone 1		1	UHL	UHL4X	13.78	158.74	108.28	56.72	10.68						
		4W Unbundled HDSL Loop including manual service inquiry and facility reservation-Zone 2		2	UHL	UHL4X	13.43	158.74	108.28	56.72	10.68						

UNBUNDLED NETWORK ELEMENTS - Mississippi														Attachment: 2 Exh A			
CATEGORY		RATE ELEMENTS	Interim	Zone	BCS	USOC	RATES($)					Svc Order Submitted Elec per LSR	Svc Order Submitted Manually per LSR	Incremental Charge - Manual Svc Order vs. Electronic-1st	Incremental Charge - Manual Svc Order vs. Electronic-Add'l	Incremental Charge - Manual Svc Order vs. Electronic-Disc 1st	Incremental Charge - Manual Svc Order vs. Electronic-Disc Add'l
								Nonrecurring		NRC Disconnect		OSS Rates($)					
							Rec	First	Add'l	First	Add'l	SOMEC	SOMAN	SOMAN	SOMAN	SOMAN	SOMAN
		4W Unbundled HDSL Loop including manual service inquiry and facility reservation-Zone 3		3	UHL	UHL4X	15.59	158.74	108.28	56.72	10.68						
		4W Unbundled HDSL Loop including manual service inquiry and facility reservation-Zone 4		4	UHL	UHL4X	14.46	158.74	108.28	56.72	10.68						
		4W Unbundled HDSL Loop w/o manual service inquiry and facility reservation-Zone 1		1	UHL	UHL4W	13.78	133.62	95.50	56.72	10.68						
		4W Unbundled HDSL Loop w/o manual service inquiry and facility reservation-Zone 2		2	UHL	UHL4W	13.43	133.62	95.50	56.72	10.68						
		4W Unbundled HDSL Loop w/o manual service inquiry and facility reservation-Zone 3		3	UHL	UHL4W	15.59	133.62	95.50	56.72	10.68						
		4W Unbundled HDSL Loop w/o manual service inquiry and facility reservation-Zone 4		4	UHL	UHL4W	14.46	133.62	95.50	56.72	10.68						
		CLEC to CLEC Conversion Charge w/o outside dispatch			UHL	UREWO		85.98	40.33								
	4-WIRE DS1 DIGITAL LOOP																
		4W DS1 Digital Loop-Zone 1		1	USL	USLXX	79.08	253.93	158.45	46.10	12.07						
		4W DS1 Digital Loop-Zone 2		2	USL	USLXX	129.38	253.93	158.45	46.10	12.07						
		4W DS1 Digital Loop-Zone 3		3	USL	USLXX	206.74	253.93	158.45	46.10	12.07						
		4W DS1 Digital Loop-Zone 4		4	USL	USLXX	458.46	253.93	158.45	46.10	12.07						
		Switch-As-Is Conversion rate per UNE Loop, Single LSR, (per DS1)			USL	URESL		25.01	3.53								
		Switch-As-Is Conversion rate per UNE Loop, Spreadsheet, (per DS1)			USL	URESP		26.50	5.02								
		CLEC to CLEC Conversion Charge w/o outside dispatch			USL	UREWO		100.90	42.96								
	4-WIRE 19.2, 56 OR 64 KBPS DIGITAL GRADE LOOP																
		4 Wire Unbundled Digital Loop 2.4 Kbps-Zone 1		1	UDL	UDL2X	27.44	126.53	88.85	60.68	14.64						
		4 Wire Unbundled Digital Loop 2.4 Kbps-Zone 2		2	UDL	UDL2X	34.55	126.53	88.85	60.68	14.64						
		4 Wire Unbundled Digital Loop 2.4 Kbps-Zone 3		3	UDL	UDL2X	40.76	126.53	88.85	60.68	14.64						
		4 Wire Unbundled Digital Loop 2.4 Kbps-Zone 4		4	UDL	UDL2X	32.25	126.53	88.85	60.68	14.64						
		4 Wire Unbundled Digital Loop 4.8 Kbps-Zone 1		1	UDL	UDL4X	27.44	126.53	88.85	60.68	14.64						
		4 Wire Unbundled Digital Loop 4.8 Kbps-Zone 2		2	UDL	UDL4X	34.55	126.53	88.85	60.68	14.64						
		4 Wire Unbundled Digital Loop 4.8 Kbps-Zone 3		3	UDL	UDL4X	40.76	126.53	88.85	60.68	14.64						
		4 Wire Unbundled Digital Loop 4.8 Kbps-Zone 4		4	UDL	UDL4X	32.25	126.53	88.85	60.68	14.64						
		4 Wire Unbundled Digital Loop 9.6 Kbps-Zone 1		1	UDL	UDL9X	27.44	126.53	88.85	60.68	14.64						
		5 Wire Unbundled Digital Loop 9.6 Kbps-Zone 2		2	UDL	UDL9X	34.55	126.53	88.85	60.68	14.64						
		6 Wire Unbundled Digital Loop 9.6 Kbps-Zone 3		3	UDL	UDL9X	40.76	126.53	88.85	60.68	14.64						
		7 Wire Unbundled Digital Loop 9.6 Kbps-Zone 4		4	UDL	UDL9X	32.25	126.53	88.85	60.68	14.64						
		4 Wire Unbundled Digital 19.2 Kbps-Zone 1		1	UDL	UDL19	27.44	126.53	88.85	60.68	14.64						
		4 Wire Unbundled Digital 19.2 Kbps-Zone 2		2	UDL	UDL19	34.55	126.53	88.85	60.68	14.64						
		4 Wire Unbundled Digital 19.2 Kbps-Zone 3		3	UDL	UDL19	40.76	126.53	88.85	60.68	14.64						
		4 Wire Unbundled Digital 19.2 Kbps-Zone 4		4	UDL	UDL19	32.25	126.53	88.85	60.68	14.64						
		4 Wire Unbundled Digital Loop 56 Kbps-Zone 1		1	UDL	UDL56	27.44	126.53	88.85	60.68	14.64						
		4 Wire Unbundled Digital Loop 56 Kbps-Zone 2		2	UDL	UDL56	34.55	126.53	88.85	60.68	14.64						
		4 Wire Unbundled Digital Loop 56 Kbps-Zone 3		3	UDL	UDL56	40.76	126.53	88.85	60.68	14.64						
		4 Wire Unbundled Digital Loop 56 Kbps-Zone 4		4	UDL	UDL56	32.25	126.53	88.85	60.68	14.64						
		4 Wire Unbundled Digital Loop 64 Kbps-Zone 1		1	UDL	UDL64	27.44	126.53	88.85	60.68	14.64						
		4 Wire Unbundled Digital Loop 64 Kbps-Zone 2		2	UDL	UDL64	34.55	126.53	88.85	60.68	14.64						
		4 Wire Unbundled Digital Loop 64 Kbps-Zone 3		3	UDL	UDL64	40.76	126.53	88.85	60.68	14.64						
		4 Wire Unbundled Digital Loop 64 Kbps-Zone 4		4	UDL	UDL64	32.25	126.53	88.85	60.68	14.64						
		Switch-As-Is Conversion rate per UNE Loop, Single LSR, (per DS0)			UDL	URESL		25.01	3.53								
		Switch-As-Is Conversion rate per UNE Loop, Spreadsheet, (per DS0)			UDL	URESP		26.50	5.02								
		CLEC to CLEC Conversion Charge w/o outside dispatch			UDL	UREWO		101.94	49.66								
	2-WIRE Unbundled COPPER LOOP																
		2W Unbundled Copper Loop-Designed including manual service inquiry & facility reservation-Zone 1		1	UCL	UCLPB	11.11	120.34	69.87	50.38	7.93						
		2W Unbundled Copper Loop-Designed including manual service inquiry & facility reservation-Zone 2		2	UCL	UCLPB	11.47	120.34	69.87	50.38	7.93						
		2W Unbundled Copper Loop-Designed including manual service inquiry & facility reservation-Zone 3		3	UCL	UCLPB	11.74	120.34	69.87	50.38	7.93						
		2W Unbundled Copper Loop-Designed including manual service inquiry & facility reservation-Zone 4		4	UCL	UCLPB	12.69	120.34	69.87	50.38	7.93						

UNBUNDLED NETWORK ELEMENTS - Mississippi														Attachment: 2 Exh A			
CATEGORY	RATE ELEMENTS	Interim	Zone	BCS	USOC	RATES($)					Svc Order Submitted Elec per LSR	Svc Order Submitted Manually per LSR	Incremental Charge - Manual Svc Order vs. Electronic-1st	Incremental Charge - Manual Svc Order vs. Electronic-Add'l	Incremental Charge - Manual Svc Order vs. Electronic-Disc 1st	Incremental Charge - Manual Svc Order vs. Electronic-Disc Add'l
							Nonrecurring		NRC Disconnect		OSS Rates($)					
						Rec	First	Add'l	First	Add'l	SOMEC	SOMAN	SOMAN	SOMAN	SOMAN	SOMAN
	2W Unbundled Copper Loop-Designed w/o manual service inquiry and facility reservation-Zone 1		1	UCL	UCLPW	11.11	95.21	57.09	50.38	7.93						
	2W Unbundled Copper Loop-Designed w/o manual service inquiry and facility reservation-Zone 2		2	UCL	UCLPW	11.47	95.21	57.09	50.38	7.93						
	2W Unbundled Copper Loop-Designed w/o manual service inquiry and facility reservation-Zone 3		3	UCL	UCLPW	11.74	95.21	57.09	50.38	7.93						
	2W Unbundled Copper Loop-Designed w/o manual service inquiry and facility reservation-Zone 4		4	UCL	UCLPW	12.69	95.21	57.09	50.38	7.93						
	Order Coordination for Unbundled Copper Loops (per loop)			UCL	UCLMC		8.20	8.20								
	CLEC to CLEC Conversion Charge w/o outside dispatch (UCL-Des)			UCL	UREWO		95.21	42.40								
4-WIRE COPPER LOOP																
	4W Copper Loop-Designed including manual service inquiry and facility reservation-Zone 1		1	UCL	UCL4S	17.30	144.68	94.22	56.72	10.68						
	4W Copper Loop-Designed including manual service inquiry and facility reservation-Zone 2		2	UCL	UCL4S	18.84	144.68	94.22	56.72	10.68						
	4W Copper Loop-Designed including manual service inquiry and facility reservation-Zone 3		3	UCL	UCL4S	21.33	144.68	94.22	56.72	10.68						
	4W Copper Loop-Designed including manual service inquiry and facility reservation-Zone 4		4	UCL	UCL4S	21.33	144.68	94.22	56.72	10.68						
	4W Copper Loop-Designed w/o manual service inquiry and facility reservation-Zone 1		1	UCL	UCL4W	17.30	119.56	81.44	56.72	10.68						
	4W Copper Loop-Designed w/o manual service inquiry and facility reservation-Zone 2		2	UCL	UCL4W	18.84	119.56	81.44	56.72	10.68						
	4W Copper Loop-Designed w/o manual service inquiry and facility reservation-Zone 3		3	UCL	UCL4W	21.33	119.56	81.44	56.72	10.68						
	4W Copper Loop-Designed w/o manual service inquiry and facility reservation-Zone 4		4	UCL	UCL4W	21.33	119.56	81.44	56.72	10.68						
	Order Coordination for Unbundled Copper Loops (per loop)			UCL	UCLMC		8.20	8.20								
	CLEC to CLEC Conversion Charge w/o outside dispatch (UCL-Des)			UCL	UREWO		95.21	42.40								
	Order Coordination for Specified Conversion Time (per LSR)			UEA, UDN, UAL, UHL, UDL, USL	OCOSL		18.19									
Rearrangements																
	EEL to UNE-L Retermination, per 2W Unbundled Voice Loop-SL2			UEA	UREEL		87.56	36.29								
	EEL to UNE-L Retermination, per 4 Wire Unbundled Voice Loop			UEA	UREEL		87.56	36.29								
	EEL to UNE-L Retermination, per 2W ISDN Loop			UDN	UREEL		91.46	44.07								
	EEL to UNE-L Retermination, per 4 Wire Unbundled Digital Loop			UDL	UREEL		101.94	49.66								
	EEL to UNE-L Retermination, per 4 Wire Unbundled DS1 Loop			USL	UREEL		100.90	42.96								
UNE LOOP COMMINGLING																
2-WIRE ANALOG VOICE GRADE LOOP - COMMINGLING																
	2W Analog VG Loop- SL2 w/Loop or Ground Start Signaling-Zone 1		1	NTCVG	UEAL2	13.89	105.96	68.28	52.82	10.37						
	2W Analog VG Loop- SL2 w/Loop or Ground Start Signaling-Zone 2		2	NTCVG	UEAL2	18.75	105.96	68.28	52.82	10.37						
	2W Analog VG Loop- SL2 w/Loop or Ground Start Signaling-Zone 3		3	NTCVG	UEAL2	27.55	105.96	68.28	52.82	10.37						
	2W Analog VG Loop- SL2 w/Loop or Ground Start Signaling-Zone 4		4	NTCVG	UEAL2	45.72	105.96	68.28	52.82	10.37						
	2W Analog VG Loop- SL2 w/Reverse Battery Signaling-Zone 1		1	NTCVG	UEAR2	13.89	105.96	68.28	52.82	10.37						
	2W Analog VG Loop- SL2 w/Reverse Battery Signaling-Zone 2		2	NTCVG	UEAR2	18.75	105.96	68.28	52.82	10.37						
	2W Analog VG Loop- SL2 w/Reverse Battery Signaling-Zone 3		3	NTCVG	UEAR2	27.55	105.96	68.28	52.82	10.37						
	2W Analog VG Loop- SL2 w/Reverse Battery Signaling-Zone 4		4	NTCVG	UEAR2	45.72	105.96	68.28	52.82	10.37						
	Switch-As-Is Conversion rate per UNE Loop, Single LSR, (per DS0)			NTCVG	URESL		25.01	3.53								
	Switch-As-Is Conversion rate per UNE Loop, Spreadsheet, (per DS0)			NTCVG	URESP		26.50	5.02								
	CLEC to CLEC Conversion Charge w/o outside dispatch			NTCVG	UREWO		87.56	36.29								
	Loop Tagging-SL2 (SL2)			NTCVG	URETL		11.19	1.10								
				NTCVG												
4-WIRE ANALOG VOICE GRADE LOOP - COMMINGLING																
	4W Analog VG Loop-Zone 1		1	NTCVG	UEAL4	27.47	132.27	94.59	60.68	14.64						
	4W Analog VG Loop-Zone 2		2	NTCVG	UEAL4	38.26	132.27	94.59	60.68	14.64						
	4W Analog VG Loop-Zone 3		3	NTCVG	UEAL4	50.03	132.27	94.59	60.68	14.64						
	4W Analog VG Loop-Zone 4		4	NTCVG	UEAL4	50.03	132.27	94.59	60.68	14.64						
	Switch-As-Is Conversion rate per UNE Loop, Single LSR, (per DS0)			NTCVG	URESL		25.01	3.53								
	Switch-As-Is Conversion rate per UNE Loop, Spreadsheet, (per DS0)			NTCVG	URESP		26.50	5.02								

CATEGORY	RATE ELEMENTS	Interim	Zone	BCS	USOC	RATES($)					Svc Order Submitted Elec per LSR	Svc Order Submitted Manually per LSR	Incremental Charge - Manual Svc Order vs. Electronic-1st	Incremental Charge - Manual Svc Order vs. Electronic-Add'l	Incremental Charge - Manual Svc Order vs. Electronic-Disc 1st	Incremental Charge - Manual Svc Order vs. Electronic-Disc Add'l
							Nonrecurring		NRC Disconnect		OSS Rates($)					
						Rec	First	Add'l	First	Add'l	SOMEC	SOMAN	SOMAN	SOMAN	SOMAN	SOMAN
	CLEC to CLEC Conversion Charge w/o outside dispatch			NTCVG	UREWO		87.56	36.29								
	4-WIRE DS1 DIGITAL LOOP															
	4W DS1 Digital Loop-Zone 1		1	NTCD1	USLXX	79.08	253.93	158.45	46.10	12.07						
	4W DS1 Digital Loop-Zone 2		2	NTCD1	USLXX	129.38	253.93	158.45	46.10	12.07						
	4W DS1 Digital Loop-Zone 3		3	NTCD1	USLXX	206.74	253.93	158.45	46.10	12.07						
	4W DS1 Digital Loop-Zone 4		4	NTCD1	USLXX	458.46	253.93	158.45	46.10	12.07						
	Switch-As-Is Conversion rate per UNE Loop, Single LSR, (per DS1)			NTCD1	URESL	0.00	25.01	3.53	0.00	0.00						
	Switch-As-Is Conversion rate per UNE Loop, Spreadsheet, (per DS1)			NTCD1	URESP	0.00	26.50	5.02	0.00	0.00						
	CLEC to CLEC Conversion Charge w/o outside dispatch			NTCD1	UREWO	0.00	100.90	42.96	0.00	0.00						
	4-WIRE 19.2, 56 OR 64 KBPS DIGITAL GRADE LOOP															
	4 Wire Unbundled Digital Loop 2.4 Kbps-Zone 1		1	NTCUD	UDL2X	27.44	126.53	88.85	60.68	14.64						
	4 Wire Unbundled Digital Loop 2.4 Kbps-Zone 2		2	NTCUD	UDL2X	34.55	126.53	88.85	60.68	14.64						
	4 Wire Unbundled Digital Loop 2.4 Kbps-Zone 3		3	NTCUD	UDL2X	40.76	126.53	88.85	60.68	14.64						
	4 Wire Unbundled Digital Loop 2.4 Kbps-Zone 4		4	NTCUD	UDL2X	32.25	126.53	88.85	60.68	14.64						
	4 Wire Unbundled Digital Loop 4.8 Kbps-Zone 1		1	NTCUD	UDL4X	27.44	126.53	88.85	60.68	14.64						
	4 Wire Unbundled Digital Loop 4.8 Kbps-Zone 2		2	NTCUD	UDL4X	34.55	126.53	88.85	60.68	14.64						
	4 Wire Unbundled Digital Loop 4.8 Kbps-Zone 3		3	NTCUD	UDL4X	40.76	126.53	88.85	60.68	14.64						
	4 Wire Unbundled Digital Loop 4.8 Kbps-Zone 4		4	NTCUD	UDL4X	32.25	126.53	88.85	60.68	14.64						
	4 Wire Unbundled Digital Loop 9.6 Kbps-Zone 1		1	NTCUD	UDL9X	27.44	126.53	88.85	60.68	14.64						
	5 Wire Unbundled Digital Loop 9.6 Kbps-Zone 2		2	NTCUD	UDL9X	34.55	126.53	88.85	60.68	14.64						
	6 Wire Unbundled Digital Loop 9.6 Kbps-Zone 3		3	NTCUD	UDL9X	40.76	126.53	88.85	60.68	14.64						
	7 Wire Unbundled Digital Loop 9.6 Kbps-Zone 4		4	NTCUD	UDL9X	32.25	126.53	88.85	60.68	14.64						
	4 Wire Unbundled Digital 19.2 Kbps-Zone 1		1	NTCUD	UDL19	27.44	126.53	88.85	60.68	14.64						
	4 Wire Unbundled Digital 19.2 Kbps-Zone 2		2	NTCUD	UDL19	34.55	126.53	88.85	60.68	14.64						
	4 Wire Unbundled Digital 19.2 Kbps-Zone 3		3	NTCUD	UDL19	40.76	126.53	88.85	60.68	14.64						
	4 Wire Unbundled Digital 19.2 Kbps-Zone 4		4	NTCUD	UDL19	32.25	126.53	88.85	60.68	14.64						
	4 Wire Unbundled Digital Loop 56 Kbps-Zone 1		1	NTCUD	UDL56	27.44	126.53	88.85	60.68	14.64						
	4 Wire Unbundled Digital Loop 56 Kbps-Zone 2		2	NTCUD	UDL56	34.55	126.53	88.85	60.68	14.64						
	4 Wire Unbundled Digital Loop 56 Kbps-Zone 3		3	NTCUD	UDL56	40.76	126.53	88.85	60.68	14.64						
	4 Wire Unbundled Digital Loop 56 Kbps-Zone 4		4	NTCUD	UDL56	32.25	126.53	88.85	60.68	14.64						
	4 Wire Unbundled Digital Loop 64 Kbps-Zone 1		1	NTCUD	UDL64	27.44	126.53	88.85	60.68	14.64						
	4 Wire Unbundled Digital Loop 64 Kbps-Zone 2		2	NTCUD	UDL64	34.55	126.53	88.85	60.68	14.64						
	4 Wire Unbundled Digital Loop 64 Kbps-Zone 3		3	NTCUD	UDL64	40.76	126.53	88.85	60.68	14.64						
	4 Wire Unbundled Digital Loop 64 Kbps-Zone 4		4	NTCUD	UDL64	32.25	126.53	88.85	60.68	14.64						
	Switch-As-Is Conversion rate per UNE Loop, Single LSR, (per DS0)			NTCUD	URESL		25.01	3.53								
	Switch-As-Is Conversion rate per UNE Loop, Spreadsheet, (per DS0)			NTCUD	URESP		26.50	5.02								
	CLEC to CLEC Conversion Charge w/o outside dispatch			NTCUD	UREWO		101.94	49.66								
	Order Coordination for Specified Conversion Time (per LSR)			NTCVG, NTCUD, NTCD1	OCOSL		18.19									
UNBUNDLED EXCHANGE ACCESS LOOP																
	2-WIRE ANALOG VOICE GRADE LOOP															
	2W Analog VG Loop- Service Level 1- Zone 1		1	UEANL	UEAL2	12.03	37.92	17.55	23.48	5.25						
	2W Analog VG Loop- Service Level 1- Zone 2		2	UEANL	UEAL2	16.87	37.92	17.55	23.48	5.25						
	2W Analog VG Loop- Service Level 1- Zone 3		3	UEANL	UEAL2	25.68	37.92	17.55	23.48	5.25						
	2W Analog VG Loop-Service Level 1-Zone 4		4	UEANL	UEAL2	43.85	37.92	17.55	23.48	5.25						
	2W Analog VG Loop- Service Level 1- Zone 1		1	UEANL	UEASL	12.03	37.92	17.55	23.48	5.25						
	2W Analog VG Loop- Service Level 1- Zone 2		2	UEANL	UEASL	16.87	37.92	17.55	23.48	5.25						
	2W Analog VG Loop- Service Level 1- Zone 3		3	UEANL	UEASL	25.68	37.92	17.55	23.48	5.25						
	2W Analog VG Loop-Service Level 1-Zone 4		4	UEANL	UEASL	43.85	37.92	17.55	23.48	5.25						
	Tag Loop at End User Premise			UEANL	URETL		8.92	0.88								
	Loop Testing-Basic 1st Half Hour			UEANL	URET1		34.36	0.00								
	Loop Testing-Basic Additional Half Hour			UEANL	URETA		19.97	19.97								
	Manual Order Coordination for UVL-SL1s (per loop)			UEANL	UEAMC		8.20	8.20								
	Order Coordination for Specified Conversion Time for UVL-SL1 (per LSR)			UEANL	OCOSL		18.19	18.19								
	Unbundled Non-Design Voice Loop, billing for BST providing make-up (Engineering Information-E.I.)			UEANL	UEANM		13.51	13.51								
	CLEC to CLEC Conversion Charge w/o Outside Dispatch			UEANL	UREWO		15.75	8.92								
	2-WIRE Unbundled COPPER LOOP															

CATEGORY	RATE ELEMENTS	Interim	Zone	BCS	USOC	RATES($)					Svc Order Submitted Elec per LSR	Svc Order Submitted Manually per LSR	Incremental Charge - Manual Svc Order vs. Electronic-1st	Incremental Charge - Manual Svc Order vs. Electronic-Add'l	Incremental Charge - Manual Svc Order vs. Electronic-Disc 1st	Incremental Charge - Manual Svc Order vs. Electronic-Disc Add'l
							Nonrecurring		NRC Disconnect		OSS Rates($)					
						Rec	First	Add'l	First	Add'l	SOMEC	SOMAN	SOMAN	SOMAN	SOMAN	SOMAN
	2W Unbundled Copper Loop-Non-Designed Zone 1	I	1	UEQ	UEQ2X	11.01	36.53	16.16	22.66	4.42						
	2W Unbundled Copper Loop-Non-Designed-Zone 2	I	2	UEQ	UEQ2X	11.51	36.53	16.16	22.66	4.42						
	2W Unbundled Copper Loop-Non-Designed-Zone 3	I	3	UEQ	UEQ2X	11.57	36.53	16.16	22.66	4.42						
	2W Unbundled Copper Loop-Non-Designed-Zone 4	I	4	UEQ	UEQ2X	13.10	36.53	16.16	22.66	4.42						
	Tag Loop at End User Premise			UEQ	URETL		8.92	0.88								
	Loop Testing-Basic 1st Half Hour			UEQ	URET1		34.36	0.00								
	Loop Testing-Basic Additional Half Hour			UEQ	URETA		19.97	19.97								
	Manual Order Coordination 2W Unbundled Copper Loop-Non-Designed (per loop)			UEQ	USBMC		8.20	8.20								
	Unbundled Copper Loop-Non-Design, billing for BST providing make-up (Engineering Information-E.I.)			UEQ	UEQMU		13.51	13.51								
	CLEC to CLEC Conversion Charge w/o Outside Dispatch			UEQ	UREWO		14.24	7.42								
LOOP MODIFICATION																
	Unbundled Loop Modification, Removal of Load Coils-2W pair less than or equal to 18k ft, per Unbundled Loop			UAL, UHL, UCL, UEQ, ULS, UEA, UEANL, UEPSR, UEPSB	ULM2L		32.57	32.57								
	Unbundled Loop Modification Removal of Load Coils-4 Wire less than or equal to 18K ft, per Unbundled Loop			UHL, UCL, UEA	ULM4L		32.57	32.57								
	Unbundled Loop Modification Removal of Bridged Tap Removal, per unbundled loop			UAL, UHL, UCL, UEQ, ULS, UEA, UEANL, UEPSR, UEPSB	ULMBT		32.59	32.59								
SUB-LOOPS																
Sub-Loop Distribution																
	Sub-Loop-Per Cross Box Location-CLEC Feeder Facility Set-Up	I		UEANL, UEF	USBSA		259.69									
	Sub-Loop-Per Cross Box Location-Per 25 Pair Panel Set-Up	I		UEANL, UEF	USBSB		22.77									
	Sub-Loop-Per Building Equipment Room-CLEC Feeder Facility Set-Up	I		UEANL	USBSC		178.47									
	Sub-Loop-Per Building Equipment Room-Per 25 Pair Panel Set-Up	I		UEANL	USBSD		56.39									
	Sub-Loop Distribution Per 2W Analog VG Loop-Zone 1		1	UEANL	USBN2	7.15	66.18	31.14	45.36	6.71						
	Sub-Loop Distribution Per 2W Analog VG Loop-Zone 2		2	UEANL	USBN2	9.51	66.18	31.14	45.36	6.71						
	Sub-Loop Distribution Per 2W Analog VG Loop-Zone 3		3	UEANL	USBN2	12.45	66.18	31.14	45.36	6.71						
	Sub-Loop Distribution Per 2W Analog VG Loop-Zone 4		4	UEANL	USBN2	18.26	66.18	31.14	45.36	6.71						
	Order Coordination for Unbundled Sub-Loops, per sub-loop pair			UEANL	USBMC		8.20	8.20								
	Sub-Loop Distribution Per 4W Analog VG Loop -Zone 1		1	UEANL	USBN4	7.30	79.49	44.45	51.27	9.35						
	Sub-Loop Distribution Per 4W Analog VG Loop -Zone 2		2	UEANL	USBN4	13.92	79.49	44.45	51.27	9.35						
	Sub-Loop Distribution Per 4W Analog VG Loop -Zone 3		3	UEANL	USBN4	16.73	79.49	44.45	51.27	9.35						
	Sub-Loop Distribution Per 4W Analog VG Loop -Zone 4		4	UEANL	USBN4	16.73	79.49	44.45	51.27	9.35						
	Order Coordination for Unbundled Sub-Loops, per sub-loop pair			UEANL	USBMC		8.20	8.20								
	Sub-Loop 2W Intrabuilding Network Cable (INC)			UEANL	USBR2	2.29	53.32	18.28	45.36	6.71						
	Order Coordination for Unbundled Sub-Loops, per sub-loop pair			UEANL	USBMC		8.20	8.20								
	Sub-Loop 4W Intrabuilding Network Cable (INC)			UEANL	USBR4	4.40	59.60	24.55	51.27	9.35						
	Order Coordination for Unbundled Sub-Loops, per sub-loop pair			UEANL	USBMC		8.20	8.20								
	Loop Testing-Basic 1st Half Hour			UEANL	URET1		34.36	0.00								
	Loop Testing-Basic Additional Half Hour			UEANL	URETA		19.97	19.97								
	2W Copper Unbundled Sub-Loop Distribution-Zone 1		1	UEF	UCS2X	6.06	66.18	31.14	45.36	6.71						
	2W Copper Unbundled Sub-Loop Distribution-Zone 2		2	UEF	UCS2X	7.09	66.18	31.14	45.36	6.71						
	2W Copper Unbundled Sub-Loop Distribution-Zone 3		3	UEF	UCS2X	8.16	66.18	31.14	45.36	6.71						
	2W Copper Unbundled Sub-Loop Distribution-Zone 4		4	UEF	UCS2X	9.90	66.18	31.14	45.36	6.71						
	Order Coordination for Unbundled Sub-Loops, per sub-loop pair			UEF	USBMC		8.20	8.20								
	4 Wire Copper Unbundled Sub-Loop Distribution-Zone 1		1	UEF	UCS4X	5.10	79.49	44.45	51.27	9.35						
	4 Wire Copper Unbundled Sub-Loop Distribution-Zone 2		2	UEF	UCS4X	9.11	79.49	44.45	51.27	9.35						
	4 Wire Copper Unbundled Sub-Loop Distribution-Zone 3		3	UEF	UCS4X	14.00	79.49	44.45	51.27	9.35						
	4 Wire Copper Unbundled Sub-Loop Distribution-Zone 4		4	UEF	UCS4X	14.00	79.49	44.45	51.27	9.35						
	Order Coordination for Unbundled Sub-Loops, per sub-loop pair			UEF	USBMC		8.20	8.20								
	Loop Tagging Service Level 1, Unbundled Copper Loop, Non-Designed and Distribution Subloops			UEF, UEANL	URETL		8.92	0.88								
	Loop Testing-Basic 1st Half Hour			UEF	URET1		34.36	0.00								

UNBUNDLED NETWORK ELEMENTS - Mississippi														Attachment: 2 Exh A			
CATEGORY	RATE ELEMENTS	Interim	Zone	BCS	USOC	RATES($)					Svc Order Submitted Elec per LSR	Svc Order Submitted Manually per LSR	Incremental Charge - Manual Svc Order vs. Electronic-1st	Incremental Charge - Manual Svc Order vs. Electronic-Add'l	Incremental Charge - Manual Svc Order vs. Electronic-Disc 1st	Incremental Charge - Manual Svc Order vs. Electronic-Disc Add'l
							Nonrecurring		NRC Disconnect		OSS Rates($)					
						Rec	First	Add'l	First	Add'l	SOMEC	SOMAN	SOMAN	SOMAN	SOMAN	SOMAN
	Loop Testing-Basic Additional Half Hour			UEF	URETA		19.97	19.97								
Unbundled Sub-Loop Modification																
	Unbundled Sub-Loop Modification-2-W Copper Dist Load Coil/Equip Removal per 2-W PR			UEF	ULM2X		176.80	5.13								
	Unbundled Sub-loop Modification-4-W Copper Dist Load Coil/Equip Removal per 4-W PR			UEF	ULM4X		176.80	5.13								
	Unbundled Loop Modification, Removal of Bridge Tap, per unbundled loop			UEF	ULMBT		279.81	6.15								
Unbundled Network Terminating Wire (UNTW)																
	Unbundled Network Terminating Wire (UNTW) per Pair			UENTW	UENPP	0.3366	30.55									
Network Interface Device (NID)																
	Network Interface Device (NID)-1-2 lines			UENTW	UND12		43.84	28.90								
	Network Interface Device (NID)-1-6 lines			UENTW	UND16		65.30	50.36								
	Network Interface Device Cross Connect-2 W			UENTW	UNDC2		5.94	5.94								
	Network Interface Device Cross Connect-4W			UENTW	UNDC4		5.94	5.94								
UNE OTHER, PROVISIONING ONLY - NO RATE																
	Unbundled Contact Name, Provisioning Only-no rate			UAL, UCL, UDC, UDL, UDN, UEA, UHL, UEANL, UEF, UEQ, UENTW, NTCVG, NTCUD, NTCD1, USL	UNECN	0.00	0.00									
	Unbundled DS1 Loop-Superframe Format Option-no rate			USL, NTCD1	CCOSF	0.00	0.00									
	Unbundled DS1 Loop-Expanded Superframe Format option-no rate			USL, NTCD1	CCOEF	0.00	0.00									
	NID-Dispatch and Service Order for NID installation			UENTW	UNDBX	0.00	0.00									
	UNTW Circuit Establishment, Provisioning Only-No Rate			UENTW	UENCE	0.00	0.00									
LOOP MAKE-UP																
	Loop Makeup-Preordering w/o Reservation, per working or spare facility queried (Manual).			UMK	UMKLW		24.12	24.12								
	Loop Makeup-Preordering With Reservation, per spare facility queried (Manual).			UMK	UMKLP		25.58	25.58								
	Loop Makeup--With or w/o Reservation, per working or spare facility queried (Mechanized)			UMK	UMKMQ		0.6652	0.6652								
LINE SPLITTING																
END USER ORDERING-CENTRAL OFFICE BASED																
	Line Splitting-per line activation DLEC owned splitter			UEPSR UEPSB	UREOS	0.61										
	Line Splitting-per line activation BST owned-physical			UEPSR UEPSB	UREBP	0.61	18.62	10.66	10.04	4.93						
	Line Splitting-per line activation BST owned-virtual			UEPSR UEPSB	UREBV	0.61	18.62	10.66	10.04	4.93						
UNBUNDLED EXCHANGE ACCESS LOOP																
2-WIRE ANALOG VOICE GRADE LOOP																
	2W Analog VG Loop-Service Level 1-Line Splitting- Zone 1		1	UEPSR UEPSB	UEALS	12.03	37.92	17.55	23.48	5.25						
	2W Analog VG Loop-Service Level 1-Line Splitting- Zone 1		1	UEPSR UEPSB	UEABS	12.03	37.92	17.55	23.48	5.25						
	2W Analog VG Loop- Service Level 1-Line Splitting-Zone 2		2	UEPSR UEPSB	UEALS	16.87	37.92	17.55	23.48	5.25						
	2W Analog VG Loop- Service Level 1-Line Splitting-Zone 2		2	UEPSR UEPSB	UEABS	16.87	37.92	17.55	23.48	5.25						
	2W Analog VG Loop-Service Level 1-Line Splitting-Zone 3		3	UEPSR UEPSB	UEALS	25.68	37.92	17.55	23.48	5.25						
	2W Analog VG Loop-Service Level 1-Line Splitting-Zone 3		3	UEPSR UEPSB	UEABS	25.68	37.92	17.55	23.48	5.25						
	2W Analog VG Loop-Service Level 1-Line Splitting-Zone 4		4	UEPSR UEPSB	UEALS	43.85	37.92	17.55	23.48	5.25						
	2W Analog VG Loop-Service Level 1-Line Splitting-Zone 4		4	UEPSR UEPSB	UEABS	43.85	37.92	17.55	23.48	5.25						
PHYSICAL COLLOCATION																
	Physical Collocation-2W Cross Connects (Loop) for Line Splitting			UEPSR UEPSB	PE1LS	0.0288	12.37	11.87	6.04	5.45						
VIRTUAL COLLOCATION																
	Virtual Collocation-2W Cross Connects (Loop) for Line Splitting			UEPSR UEPSB	VE1LS	0.0268	12.37	11.87	6.04	5.45						
UNBUNDLED DEDICATED TRANSPORT																
INTEROFFICE CHANNEL - DEDICATED TRANSPORT																
	Interoffice Channel-2W VG-per mile			U1TVX	1L5XX	0.0098										
	Interoffice Channel-2W VG-Facility Termination			U1TVX	U1TV2	22.52	40.77	27.57	17.26	7.11						
	Interoffice Channel-2W VG Rev Bat.-per mile			U1TVX	1L5XX	0.0098										
	Interoffice Channel-2W VG Rev Bat.-Facility Termination			U1TVX	U1TR2	22.52	40.77	27.57	17.26	7.11						
	Interoffice Channel-4W VG-per mile			U1TVX	1L5XX	0.0098										

UNBUNDLED NETWORK ELEMENTS - Mississippi														Attachment: 2 Exh A			
CATEGORY		RATE ELEMENTS	Interim	Zone	BCS	USOC	RATES($)					Svc Order Submitted Elec per LSR	Svc Order Submitted Manually per LSR	Incremental Charge - Manual Svc Order vs. Electronic-1st	Incremental Charge - Manual Svc Order vs. Electronic-Add'l	Incremental Charge - Manual Svc Order vs. Electronic-Disc 1st	Incremental Charge - Manual Svc Order vs. Electronic-Disc Add'l
								Nonrecurring		NRC Disconnect		OSS Rates($)					
							Rec	First	Add'l	First	Add'l	SOMEC	SOMAN	SOMAN	SOMAN	SOMAN	SOMAN
		Interoffice Channel-4- Wire VG-Facility Termination			U1TVX	U1TV4	19.79	40.77	27.57	17.26	7.11						
		Interoffice Channel-56 kbps-per mile			U1TDX	1L5XX	0.0098										
		Interoffice Channel-56 kbps-Facility Termination			U1TDX	U1TD5	15.68	40.77	27.57	17.26	7.11						
		Interoffice Channel-64 kbps-per mile			U1TDX	1L5XX	0.0098										
		Interoffice Channel-64 kbps-Facility Termination			U1TDX	U1TD6	15.68	40.77	27.57	17.26	7.11						
		Interoffice Channel-DS1-per mile			U1TD1	1L5XX	0.201										
		Interoffice Channel-DS1-Facility Termination			U1TD1	U1TF1	57.33	89.79	82.28	16.86	14.90						
		Interoffice Channel-DS3-per mile			U1TD3	1L5XX	4.76										
		Interoffice Channel-DS3-Facility Termination			U1TD3	U1TF3	641.90	280.37	163.70	62.08	60.29						
		Interoffice Channel-STS-1-per mile			U1TS1	1L5XX	4.76										
		Interoffice Channel-STS-1-Facility Termination			U1TS1	U1TFS	644.21	280.37	163.70	62.08	60.29						
		Local Channel-Dedicated-2W VG			ULDVX, UNCVX	ULDV2	17.15										
		Local Channel-Dedicated-2W VG Rev Bat			ULDVX	ULDR2	17.15										
		Local Channel-Dedicated-4W VG			ULDVX, UNCVX	ULDV4	18.39										
		Local Channel-Dedicated-DS1-Zone 1		1	ULDD1, UNC1X	ULDF1	42.35										
		Local Channel-Dedicated-DS1 -Zone 2		2	ULDD1, UNC1X	ULDF1	41.39										
		Local Channel-Dedicated-DS1 -Zone 3		3	ULDD1, UNC1X	ULDF1	254.87										
		Local Channel-Dedicated-DS1 -Zone 4		4	ULDD1, UNC1X	ULDF1	254.87										
		Local Channel-Dedicated-DS3-Per Mile per month			ULDD3, UNC3X	1L5NC	11.11										
		Local Channel-Dedicated-DS3-Facility Termination			ULDD3, UNC3X	ULDF3	475.95										
		Local Channel-Dedicated-STS-1- Per Mile per month			ULDS1, UNCSX	1L5NC	11.11										
	UNBUNDLED DARK FIBER																
		Dark Fiber-Interoffice Transport, Per Four Fiber Strands, Per Route Mile Or Fraction Thereof			UDF, UDFCX	1L5DF	28.27										
		Dark Fiber-Interoffice Transport, Per Four Fiber Strands, Per Route Mile Or Fraction Thereof			UDF, UDFCX	UDF14		642.79	138.67	326.97	203.85						
DARK FIBER																	
		Dark Fiber, Four Fiber Strands, Per Route Mile or Fraction Thereof per month-Local Channel			UDF, UDFCX	1L5DC	68.94										
		Dark Fiber, Four Fiber Strands, Per Route Mile or Fraction Thereof per month-Local Loop			UDF, UDFCX	1L5DL	68.94										
8XX ACCESS TEN DIGIT SCREENING																	
		8XX Access Ten Digit Screening, Per Call					0.0006216										
		8XX Access Ten Digit Screening, w/ 8FL No. Delivery, per query					0.0006216										
		8XX Access Ten Digit Screening, w/ POTS No. Delivery, per query					0.0006216										
LINE INFORMATION DATA BASE ACCESS (LIDB)																	
		LIDB Common Transport Per Query					0.0000197										
		LIDB Validation Per Query					0.0137053										
		LIDB Originating Point Code Establishment or Change			OQU	NRBPX		34.52	34.52	42.33	42.33						
CALLING NAME (CNAM) SERVICE																	
		CNAM for DB Owners, Per Query					0.0010231										
		CNAM for Non DB Owners, Per Query					0.0010231										
SELECTIVE ROUTING																	
		Selective Routing Per Unique Line Class Code Per Request Per Switch						85.19	85.19	14.19	14.19						
AIN SELECTIVE CARRIER ROUTING																	
		Regional Service Establishment						101,685.12		8,640.51							
		End Office Establishment						167.49	167.49	1.71	1.71						
		Query NRC, per query					0.0030502										
AIN - BELLSOUTH AIN SMS ACCESS SERVICE																	
		AIN SMS Access Service-Service Establishment, Per State, Initial Setup			A1N	CAMSE		39.67	39.67	40.92	40.92						
		AIN SMS Access Service-Port Connection-Dial/Shared Access			A1N	CAMDP		7.87	7.87	9.14	9.14						
		AIN SMS Access Service-Port Connection-ISDN Access			A1N	CAM1P		7.87	7.87	9.14	9.14						
		AIN SMS Access Service-User Identification Codes-Per User ID Code			A1N	CAMAU		35.21	35.21	27.21	27.21						
		AIN SMS Access Service-Security Card, Per User ID Code, Initial or Replacement			A1N	CAMRC		42.13	42.13	11.78	11.78						
		AIN SMS Access Service-Storage, Per Unit (100 Kilobytes)					0.0021										
		AIN SMS Access Service-Session, Per Minute					0.5649										

UNBUNDLED NETWORK ELEMENTS - Mississippi														Attachment: 2 Exh A			
CATEGORY	RATE ELEMENTS	Interim	Zone	BCS	USOC	RATES($)					Svc Order Submitted Elec per LSR	Svc Order Submitted Manually per LSR	Incremental Charge - Manual Svc Order vs. Electronic-1st	Incremental Charge - Manual Svc Order vs. Electronic-Add'l	Incremental Charge - Manual Svc Order vs. Electronic-Disc 1st	Incremental Charge - Manual Svc Order vs. Electronic-Disc Add'l
							Nonrecurring		NRC Disconnect		OSS Rates($)					
						Rec	First	Add'l	First	Add'l	SOMEC	SOMAN	SOMAN	SOMAN	SOMAN	SOMAN
	AIN SMS Access Service-Company Performed Session, Per Minute					0.8393										
HIGH CAPACITY UNBUNDLED LOCAL LOOP																
DS-3/STS-1 UNBUNDLED LOCAL LOOP - Stand Alone																
	DS3 Unbundled Local Loop-per mile			UE3	1L5ND	11.20										
	DS3 Unbundled Local Loop-Facility Termination			UE3	UE3PX	326.15	454.13	265.47	123.23	86.19						
	STS-1Unbundled Local Loop-per mile			UDLSX	1L5ND	11.20										
	STS-1 Unbundled Local Loop-Facility Termination			UDLSX	UDLS1	338.55	454.13	265.47	123.23	86.19						
ENHANCED EXTENDED LINK (EELs)																
Network Elements Used in Combinations																
	2W VG Loop (SL2) in Combination-Zone 1		1	UNCVX	UEAL2	13.89	105.96	68.28	52.82	10.37						
	2W VG Loop (SL2) in Combination-Zone 2		2	UNCVX	UEAL2	18.75	105.96	68.28	52.82	10.37						
	2W VG Loop (SL2) in Combination-Zone 3		3	UNCVX	UEAL2	27.55	105.96	68.28	52.82	10.37						
	2W VG Loop (SL2) in Combination-Zone 4		4	UNCVX	UEAL2	45.72	105.96	68.28	52.82	10.37						
	4W Analog VG Loop in Combination -Zone 1		1	UNCVX	UEAL4	27.47	132.27	94.59	60.68	14.64						
	4W Analog VG Loop in Combination -Zone 2		2	UNCVX	UEAL4	38.26	132.27	94.59	60.68	14.64						
	4W Analog VG Loop in Combination -Zone 3		3	UNCVX	UEAL4	50.03	132.27	94.59	60.68	14.64						
	4W Analog VG Loop in Combination -Zone 4		4	UNCVX	UEAL4	50.03	132.27	94.59	60.68	14.64						
	2W ISDN Loop in Combination-Zone 1		1	UNCNX	U1L2X	21.01	117.61	79.92	52.82	10.37						
	2W ISDN Loop in Combination-Zone 2		2	UNCNX	U1L2X	27.59	117.61	79.92	52.82	10.37						
	2W ISDN Loop in Combination-Zone 3		3	UNCNX	U1L2X	37.34	117.61	79.92	52.82	10.37						
	2W ISDN Loop in Combination-Zone 4		4	UNCNX	U1L2X	59.18	117.61	79.92	52.82	10.37						
	4W 56Kbps Digital Grade Loop in Combination-Zone 1		1	UNCDX	UDL56	27.44	126.53	88.85	60.68	14.64						
	4W 56Kbps Digital Grade Loop in Combination-Zone 2		2	UNCDX	UDL56	34.55	126.53	88.85	60.68	14.64						
	4W 56Kbps Digital Grade Loop in Combination-Zone 3		3	UNCDX	UDL56	40.76	126.53	88.85	60.68	14.64						
	4W 56Kbps Digital Grade Loop in Combination-Zone 4		4	UNCDX	UDL56	32.25	126.53	88.85	60.68	14.64						
	4W 64Kbps Digital Grade Loop in Combination-Zone 1		1	UNCDX	UDL64	27.44	126.53	88.85	60.68	14.64						
	4W 64Kbps Digital Grade Loop in Combination-Zone 2		2	UNCDX	UDL64	34.55	126.53	88.85	60.68	14.64						
	4W 64Kbps Digital Grade Loop in Combination-Zone 3		3	UNCDX	UDL64	40.76	126.53	88.85	60.68	14.64						
	4W 64Kbps Digital Grade Loop in Combination-Zone 4		4	UNCDX	UDL64	32.25	126.53	88.85	60.68	14.64						
	4W DS1 Digital Loop in Combination-Zone 1		1	UNC1X	USLXX	79.08	253.93	158.45	46.10	12.07						
	4W DS1 Digital Loop in Combination-Zone 2		2	UNC1X	USLXX	129.38	253.93	158.45	46.10	12.07						
	4W DS1 Digital Loop in Combination-Zone 3		3	UNC1X	USLXX	206.74	253.93	158.45	46.10	12.07						
	4W DS1 Digital Loop in Combination-Zone 4		4	UNC1X	USLXX	458.46	253.93	158.45	46.10	12.07						
	DS3 Local Loop in combination-per mile			UNC3X	1L5ND	11.20										
	DS3 Local Loop in combination-Facility Termination			UNC3X	UE3PX	326.15	454.13	265.47	123.23	86.19						
	STS-1 Local Loop in combination-per mile			UNCSX	1L5ND	11.20										
	STS-1 Local Loop in combination-Facility Termination			UNCSX	UDLS1	338.55	454.13	265.47	123.23	86.19						
	Interoffice Channel in combination-2W VG-per mile			UNCVX	1L5XX	0.0098										
	Interoffice Channel in combination-2W VG-Facility Termination			UNCVX	U1TV2	20.32	40.77	27.57	17.26	7.11						
	Interoffice Channel in combination-4W VG-per mile			UNCVX	1L5XX	0.0098										
	Interoffice Channel in combination-4W VG-Facility Termination			UNCVX	U1TV4	17.86	40.77	27.57	17.26	7.11						
	Interoffice Channel in combination-4W 56 kbps-per mile			UNCDX	1L5XX	0.0098										
	Interoffice Channel in combination-4W 56 kbps-Facility Termination			UNCDX	U1TD5	14.04	40.77	27.57	17.26	7.11						
	Interoffice Channel in combination-4W 64 kbps-per mile			UNCDX	1L5XX	0.0098										
	Interoffice Channel in combination-4W 64 kbps-Facility Termination			UNCDX	U1TD6	14.04	40.77	27.57	17.26	7.11						
	Interoffice Channel in combination-DS1-per mile			UNC1X	1L5XX	0.201										
	Interoffice Channel in combination-DS1 Facility Termination			UNC1X	U1TF1	51.72	89.79	82.28	16.86	14.90						
	Interoffice Channel in combination-DS3-per mile			UNC3X	1L5XX	4.76										
	Interoffice Channel in combination-DS3-Facility Termination			UNC3X	U1TF3	579.12	280.37	163.70	62.08	60.29						
	Interoffice Channel in combination-STS-1-per mile			UNCSX	1L5XX	4.76										
	Interoffice Channel in combination-STS-1 Facility Termination			UNCSX	U1TFS	581.21	280.37	163.70	62.08	60.29						
ADDITIONAL NETWORK ELEMENTS																
Optional Features & Functions:																
	Clear Channel Capability Extended Frame Option-per DS1	I		U1TD1, ULDD1,UNC1X	CCOEF		0.00	0.00	0.00	0.00						
	Clear Channel Capability Super FrameOption-per DS1	I		U1TD1, ULDD1,UNC1X	CCOSF		0.00	0.00	0.00	0.00						
	Clear Channel Capability (SF/ESF) Option-Subsequent Activity-per DS1	I		ULDD1, U1TD1, UNC1X, USL	NRCCC		184.60	23.78	1.96	0.76						

CATEGORY	RATE ELEMENTS	Interim	Zone	BCS	USOC	RATES($)					Svc Order Submitted Elec per LSR	Svc Order Submitted Manually per LSR	Incremental Charge - Manual Svc Order vs. Electronic-1st	Incremental Charge - Manual Svc Order vs. Electronic-Add'l	Incremental Charge - Manual Svc Order vs. Electronic-Disc 1st	Incremental Charge - Manual Svc Order vs. Electronic-Disc Add'l
							Nonrecurring		NRC Disconnect		OSS Rates($)					
						Rec	First	Add'l	First	Add'l	SOMEC	SOMAN	SOMAN	SOMAN	SOMAN	SOMAN
	C-bit Parity Option-Subsequent Activity-per DS3	i		U1TD3, ULDD3, UE3, UNC3X	NRCC3		218.72	7.66	0.7201	0.00						
	DS1 to DS0 Channel System per month			UNC1X	MQ1	102.85	91.57	62.94	10.87	10.10						
	DS3 to DS1 Channel System per month			UNC3X, UNCSX	MQ3	170.63	179.17	94.52	34.30	32.82						
	VG COCI in combination			UNCVX	1D1VG	0.5737	6.62	4.74								
	VG COCI-DS1 to DS0 Channel System-per month used for a Local Loop			UEA	1D1VG	0.5737	6.62	4.74								
	VG COCI-DS1 to DS0 Channel System-per month used for connection to a channelized DS1 Local Channel in the same SWC as collocation			U1TUC	1D1VG	0.5737	6.62	4.74								
	OCU-DP COCI (2.4-64kbs) in combination			UNCDX	1D1DD	1.22	6.62	4.74								
	OCU-DP COCI (data)-DS1 to DS0 Channel System-per month (2.4-64kbs) used for a Local Loop			UDL	1D1DD	1.22	6.62	4.74								
	OCU-DP COCI (data)-DS1 to DS0 Channel System-per month (2.4-64kbs) used for connection to a channelized DS1 Local Channel in the same SWC as collocation			U1TUD	1D1DD	1.22	6.62	4.74								
	2W ISDN COCI (BRITE) in combination			UNCNX	UC1CA	2.62	6.62	4.74								
	2W ISDN COCI (BRITE)-for Local Loop			UDN	UC1CA	2.62	6.62	4.74								
	2W ISDN COCI (BRITE)-for connection to DS1 Local Channel in the same SWC as collocation			U1TUB	UC1CA	2.62	6.62	4.74								
	DS1 COCI in combination			UNC1X	UC1D1	12.96	6.62	4.74								
	DS1 COCI-for Local Channel			ULDD1	UC1D1	12.96	6.62	4.74								
	DS1 COCI-for Interoffice Channel			U1TD1	UC1D1	12.96	6.62	4.74								
	DS1 COCI-for Loop			USL	UC1D1	12.96	6.62	4.74								
	DS1 COCI-for DS1 Local Channel in the same SWC as collocation			U1TUA	UC1D1	12.96	6.62	4.74								
	Wholesale to UNE, Switch-As-Is Conversion Charge			UNCVX, U1TVX, UNCDX, U1TDX, UNC1X, U1TD1,UNC3X, U1TD3, UNCSX, U1TS1, UDF,UDFCX	UNCCC		5.63	5.63								
	Unbundled Misc Rate Element, SNE SAI, Single Network Element-Switch As Is Non-recurring Charge, per circuit (LSR)	I		U1TVX, U1TDX, U1TD1, U1TD3, U1TS1, UDF, UE3	URESL		36.87	16.14								
	Unbundled Misc Rate Element, SNE SAI, Single Network Element-Switch As Is Non-recurring Charge, incremental charge per circuit on a spreadsheet	I		U1TVX, U1TDX, U1TD1, U1TD3, U1TS1, UDF, UE3	URESP		1.49	1.49								
	UNE Reconfiguration Change Charge per Circuit	I		UNC1X	URERC		35.00	35.00								
	UNE Reconfiguration Change Charge per Circuit Project Managed	I		UNC1X	URERP		1.49	1.49								
Access to DCS - Customer Reconfiguration (FlexServ)																
	Customer Reconfiguration Establishment						1.49		1.90							
	DS1 DCS Termination with DS0 Switching					20.81	25.69	19.77	17.15	13.79						
	DS1 DCS Termination with DS1 Switching					10.73	18.57	12.65	12.60	9.24						
	DS3 DCS Termination with DS1 Switching					145.05	25.69	19.77	17.15	13.79						
Service Rearrangements																
	NRC-Change in Facility Assignment per circuit Service Rearrangement	I		U1TVX, U1TDX, UEA, UDL, U1TUC, U1TUD, U1TUB, ULDVX, ULDDX, UNCVX, UNCDX, UNC1X	URETD		100.90	42.96								
	NRC-Change in Facility Assignment per circuit Project Management (added to CFA per circuit if project managed)	I		U1TVX, U1TDX, UEA, UDL, U1TUC, U1TUD, U1TUB, ULDVX, ULDDX, UNCVX, UNCDX, UNC1X	URETB		1.28	1.28								
	NRC-Order Coordination Specific Time-Dedicated Transport	I		UNC1X	OCOSR		18.87	18.87								

CATEGORY		RATE ELEMENTS	Interim	Zone	BCS	USOC	RATES($)					Svc Order Submitted Elec per LSR	Svc Order Submitted Manually per LSR	Incremental Charge - Manual Svc Order vs. Electronic-1st	Incremental Charge - Manual Svc Order vs. Electronic-Add'l	Incremental Charge - Manual Svc Order vs. Electronic-Disc 1st	Incremental Charge - Manual Svc Order vs. Electronic-Disc Add'l
								Nonrecurring		NRC Disconnect		OSS Rates($)					
							Rec	First	Add'l	First	Add'l	SOMEC	SOMAN	SOMAN	SOMAN	SOMAN	SOMAN
COMMINGLING																	
		Commingling Authorization			UNCVX, UNCDX, UNC1X, UNC3X, UNCSX, U1TD1, U1TD3, U1TS1, UE3, UDLSX, U1TVX, U1TDX, U1TUB, ULDVX, ULDD1, ULDD3, ULDS1	CMGAU	0.00	0.00	0.00	0.00	0.00						
	Commingled (UNE part of single bandwidth circuit)																
		Commingled VG COCI			XDV2X, NTCVG	1D1VG	0.5737	6.62	4.74								
		Commingled Digital COCI			XDV6X, NTCUD	1D1DD	1.22	6.62	4.74								
		Commingled ISDN COCI			XDD4X	UC1CA	2.62	6.62	4.74								
		Commingled 2W VG Interoffice Channel			XDV2X	U1TV2	22.52	40.77	27.57	17.26	7.11						
		Commingled 4W VG Interoffice Channel			XDV6X	U1TV4	19.79	40.77	27.57	17.26	7.11						
		Commingled 56kbps Interoffice Channel			XDD4X	U1TD5	15.68	40.77	27.57	17.26	7.11						
		Commingled 64kbps Interoffice Channel			XDD4X	U1TD6	15.68	40.77	27.57	17.26	7.11						
		Commingled VG/DS0 Interoffice Channel Mileage			XDV2X, XDV6X, XDD4X	1L5XX	0.0098										
		Commingled 2W Local Loop Zone 1		1	XDV2X	UEAL2	13.89	105.96	68.28	52.82	10.37						
		Commingled 2W Local Loop Zone 2		2	XDV2X	UEAL2	18.75	105.96	68.28	52.82	10.37						
		Commingled 2W Local Loop Zone 3		3	XDV2X	UEAL2	27.55	105.96	68.28	52.82	10.37						
		Commingled 2W Local Loop Zone 4		4	XDV2X	UEAL2	45.72	105.96	68.28	52.82	10.37						
		Commingled 4W Local Loop Zone 1		1	XDV6X	UEAL4	27.47	132.27	94.59	60.68	14.64						
		Commingled 4W Local Loop Zone 2		2	XDV6X	UEAL4	38.26	132.27	94.59	60.68	14.64						
		Commingled 4W Local Loop Zone 3		3	XDV6X	UEAL4	50.03	132.27	94.59	60.68	14.64						
		Commingled 4W Local Loop Zone 4		4	XDV6X	UEAL4	50.03	132.27	94.59	60.68	14.64						
		Commingled 56kbps Local Loop Zone 1		1	XDD4X	UDL56	27.44	126.53	88.85	60.68	14.64						
		Commingled 56kbps Local Loop Zone 2		2	XDD4X	UDL56	34.55	126.53	88.85	60.68	14.64						
		Commingled 56kbps Local Loop Zone 3		3	XDD4X	UDL56	40.76	126.53	88.85	60.68	14.64						
		Commingled 56kbps Local Loop Zone 4		4	XDD4X	UDL56	32.25	126.53	88.85	60.68	14.64						
		Commingled 64kbps Local Loop Zone 1		1	XDD4X	UDL64	27.44	126.53	88.85	60.68	14.64						
		Commingled 64kbps Local Loop Zone 2		2	XDD4X	UDL64	34.55	126.53	88.85	60.68	14.64						
		Commingled 64kbps Local Loop Zone 3		3	XDD4X	UDL64	40.76	126.53	88.85	60.68	14.64						
		Commingled 64kbps Local Loop Zone 4		4	XDD4X	UDL64	32.25	126.53	88.85	60.68	14.64						
		Commingled ISDN Local Loop Zone 1		1	XDD4X	U1L2X	21.01	117.61	79.92	52.82	10.37						
		Commingled ISDN Local Loop Zone 2		2	XDD4X	U1L2X	27.59	117.61	79.92	52.82	10.37						
		Commingled ISDN Local Loop Zone 3		3	XDD4X	U1L2X	37.34	117.61	79.92	52.82	10.37						
		Commingled ISDN Local Loop Zone 4		4	XDD4X	U1L2X	59.18	117.61	79.92	52.82	10.37						
		Commingled DS1 COCI			XDH1X, NTCD1	UC1D1	12.96	6.62	4.74								
		Commingled DS1 Interoffice Channel			XDH1X	U1TF1	57.33	89.79	82.28	16.86	14.90						
		Commingled DS1 Interoffice Channel Mileage			XDH1X	1L5XX	0.201										
		Commingled DS1/DS0 Channel System			XDH1X	MQ1	102.85	91.57	62.94	10.87	10.10						
		Commingled DS1 Local Loop Zone 1		1	XDH1X	USLXX	79.08	253.93	158.45	46.10	12.07						
		Commingled DS1 Local Loop Zone 2		2	XDH1X	USLXX	129.38	253.93	158.45	46.10	12.07						
		Commingled DS1 Local Loop Zone 3		3	XDH1X	USLXX	206.74	253.93	158.45	46.10	12.07						
		Commingled DS1 Local Loop Zone 4		4	XDH1X	USLXX	458.46	253.93	158.45	46.10	12.07						
		Commingled DS3 Local Loop			HFQC6	UE3PX	326.15	454.13	265.47	123.23	86.19						
		Commingled DS3/STS-1 Local Loop Mileage			HFQC6, HFRST	1L5ND	11.20										
		Commingled STS-1 Local Loop			HFRST	UDLS1	338.55	454.13	265.47	123.23	86.19						
		Commingled DS3/DS1 Channel System			HFQC6	MQ3	170.63	179.17	94.52	34.30	32.82						
		Commingled DS3 Interoffice Channel			HFQC6	U1TF3	641.90	280.37	163.70	62.08	60.29						
		Commingled DS3 Interoffice Channel Mileage			HFQC6	1L5XX	4.76										
		Commingled STS-1Interoffice Channel			HFRST	U1TFS	644.21	280.37	163.70	62.08	60.29						
		Commingled STS-1Interoffice Channel Mileage			HFRST	1L5XX	4.76										
		Commingled Dark Fiber-Interoffice Transport, Per Four Fiber Strands, Per Route Mile Or Fraction Thereof			HEQDL	1L5DF	28.27										

UNBUNDLED NETWORK ELEMENTS - Mississippi														Attachment: 2 Exh A			
CATEGORY	RATE ELEMENTS	Interim	Zone	BCS	USOC	RATES($)					Svc Order Submitted Elec per LSR	Svc Order Submitted Manually per LSR	Incremental Charge - Manual Svc Order vs. Electronic-1st	Incremental Charge - Manual Svc Order vs. Electronic-Add'l	Incremental Charge - Manual Svc Order vs. Electronic-Disc 1st	Incremental Charge - Manual Svc Order vs. Electronic-Disc Add'l
							Nonrecurring		NRC Disconnect		OSS Rates($)					
						Rec	First	Add'l	First	Add'l	SOMEC	SOMAN	SOMAN	SOMAN	SOMAN	SOMAN
	Commingled Dark Fiber-Interoffice Transport, Per Four Fiber Strands, Per Route Mile Or Fraction Thereof			HEQDL	UDF14		642.79	138.67	326.97	203.85						
SIGNALING (CCS7)																
NOTE:"bk" beside a rate indicates that the parties have agreed to bill and keep for that element pursuant to the terms and conditions in Attachment 3.																
	CCS7 Signaling Usage, Per TCAP Message					0.0000597bk										
	CCS7 Signaling Usage, Per ISUP Message					0.0000149bk										
LNP Query Service																
	LNP Charge Per query					0.0008477										
	LNP Service Establishment Manual						12.59	12.59	11.58	11.58						
	LNP Service Provisioning with Point Code Establishment						596.94	304.96	270.49	198.89						
911 PBX LOCATE																
911 PBX LOCATE DATABASE CAPABILITY																
	Service Establishment per CLEC per End User Account			9PBDC	9PBEU		1,822.00									
	Changes to TN Range or Customer Profile			9PBDC	9PBTN		182.29									
	Per Telephone Number (Monthly)			9PBDC	9PBMM	0.07										
	Change Company (Service Provider) ID			9PBDC	9PBPC		535.11									
	PBX Locate Service Support per CLEC (Monthlt)			9PBDC	9PBMR	178.43										
	Service Order Charge			9PBDC	9PBSC		15.75									
911 PBX LOCATE TRANSPORT COMPONENT																
See Att 3																
Note: Rates displaying an "I" in Interim column are interim as a result of a Commission order.																
UNBUNDLED LOCAL EXCHANGE SWITCHING(PORTS)																
The Exchange Switching Port Rates Reflected Here Apply to Embedded Base Switching Ports as of March 10, 2005 and Consist of the TELRIC Cost Based Rates Plus $1.00 in Accordance with the TRRO.																
Exchange Ports																
NOTE: Although the Port Rate includes all available features in GA, KY, LA & TN, the desired features will need to be ordered using retail USOCs																
2-WIRE VOICE GRADE LINE PORT RATES (RES)																
	Exchange Ports-2W Analog Line Port- Res.			UEPSR	UEPRL	2.41	2.39	2.29	1.42	1.33						
	Exchange Ports-2W Analog Line Port with Caller ID-Res.			UEPSR	UEPRC	2.41	2.39	2.29	1.42	1.33						
	Exchange Ports-2W Analog Line Port outgoing only-Res.			UEPSR	UEPRO	2.41	2.39	2.29	1.42	1.33						
	Exchange Ports-2W VG unbundled MS extended local dialing parity Port with Caller ID-Res.			UEPSR	UEPAT	2.41	2.39	2.29	1.42	1.33						
	Exchange Ports-2W VG unbundled res, low usage line port with Caller ID (LUM)			UEPSR	UEPAP	2.41	2.39	2.29	1.42	1.33						
	Exchange Ports-2W Voice MS Residence Dialing Plan w/o Caller ID			UEPSR	UEPWJ	2.41	2.39	2.29	1.42	1.33						
	2W voice unbundled Low Usage Line Port w/o Caller ID Capability			UEPSR	UEPRT	2.41	2.39	2.29	1.42	1.33						
	Subsequent Activity			UEPSR	USASC	0.00	0.00	0.00								
FEATURES																
	All Available Vertical Features			UEPSR	UEPVF	2.56	0.00	0.00								
2-WIRE VOICE GRADE LINE PORT RATES (BUS)																
	Exchange Ports-2W Analog Line Port w/o Caller ID-Bus			UEPSB	UEPBL	2.41	2.39	2.29	1.42	1.33						
	Exchange Ports-2W VG unbundled Line Port with unbundled port with Caller+E484 ID-Bus.			UEPSB	UEPBC	2.41	2.39	2.29	1.42	1.33						
	Exchange Ports-2W Analog Line Port outgoing only-Bus.			UEPSB	UEPBO	2.41	2.39	2.29	1.42	1.33						
	Exchange Ports-2W VG unbundled MS extended local dialing parity Port with Caller ID-Bus.			UEPSB	UEPAY	2.41	2.39	2.29	1.42	1.33						
	Exhange Ports-2W VG unbundled incoming only port with Caller ID-Bus			UEPSB	UEPB1	2.41	2.39	2.29	1.42	1.33						
	Exchange Ports-2W Voice MS Business Dialing Plan w/o Caller ID			UEPSB	UEPWK	2.41	2.39	2.29	1.42	1.33						
	2W voice unbundled Incoming Only Port w/o Caller ID Capability			UEPSB	UEPBE	2.41	2.39	2.29	1.42	1.33						
	Subsequent Activity			UEPSB	USASC	0.00	0.00	0.00								
FEATURES																
	All Available Vertical Features			UEPSB	UEPVF	2.56	0.00	0.00								
EXCHANGE PORT RATES (DID & PBX)																
	2W VG Unbundled 2-Way PBX Trunk-Res			UEPSE	UEPRD	2.41	31.45	14.93	14.38	0.92						
	2W VG Line Side Unbundled 2-Way PBX Trunk-Bus			UEPSP	UEPPC	2.41	31.45	14.93	14.38	0.92						
	2W VG Line Side Unbundled Outward PBX Trunk-Bus			UEPSP	UEPPO	2.41	31.45	14.93	14.38	0.92						
	2W VG Line Side Unbundled Incoming PBX Trunk-Bus			UEPSP	UEPP1	2.41	31.45	14.93	14.38	0.92						
	2W Analog Long Distance Terminal PBX Trunk-Bus			UEPSP	UEPLD	2.41	31.45	14.93	14.38	0.92						
	2W Voice Unbundled PBX LD Terminal Ports			UEPSP	UEPLD	2.41	31.45	14.93	14.38	0.92						

CATEGORY	RATE ELEMENTS	Interim	Zone	BCS	USOC	RATES($)					Svc Order Submitted Elec per LSR	Svc Order Submitted Manually per LSR	Incremental Charge - Manual Svc Order vs. Electronic-1st	Incremental Charge - Manual Svc Order vs. Electronic-Add'l	Incremental Charge - Manual Svc Order vs. Electronic-Disc 1st	Incremental Charge - Manual Svc Order vs. Electronic-Disc Add'l
							Nonrecurring		NRC Disconnect		OSS Rates($)					
						Rec	First	Add'l	First	Add'l	SOMEC	SOMAN	SOMAN	SOMAN	SOMAN	SOMAN
	2W Vice Unbundled 2-Way PBX Usage Port			UEPSP	UEPXA	2.41	31.45	14.93	14.38	0.92						
	2W Voice Unbundled PBX Toll Terminal Hotel Ports			UEPSP	UEPXB	2.41	31.45	14.93	14.38	0.92						
	2W Voice Unbundled PBX LD DDD Terminals Port			UEPSP	UEPXC	2.41	31.45	14.93	14.38	0.92						
	2W Voice Unbundled PBX LD Terminal Switchboard Port			UEPSP	UEPXD	2.41	31.45	14.93	14.38	0.92						
	2W Voice Unbundled PBX LD Terminal Switchboard IDD Capable Port			UEPSP	UEPXE	2.41	31.45	14.93	14.38	0.92						
	2W Voice Unbundled 2-Way PBX Hotel/Hospital Economy Administrative Calling Port			UEPSP	UEPXL	2.41	31.45	14.93	14.38	0.92						
	2W Voice Unbundled 2-Way PBX Hotel/Hospital Economy Rm Calling Port			UEPSP	UEPXM	2.41	31.45	14.93	14.38	0.92						
	2W Voice Unbundled 1-Way Outgoing PBX Hotel/Hospital Discount Rm Calling Port			UEPSP	UEPXO	2.41	31.45	14.93	14.38	0.92						
	2W Voice Unbundled 2-Way PBX MS Local Economy Calling Port			UEPSP	UEPXQ	2.41	31.45	14.93	14.38	0.92						
	2W Voice Unbundled 2-Way PBX MS Local Optional Calling Port			UEPSP	UEPXR	2.41	31.45	14.93	14.38	0.92						
	2W Voice Unbundled PBX Port, MS only			UEPSP	UEPA5	2.41	31.45	14.93	14.38	0.92						
	2W Voice Unbundled 1-Way Outgoing PBX Measured Port			UEPSP	UEPXS	2.41	31.45	14.93	14.38	0.92						
	Subsequent Activity			UEPSP	USASC	0.00	0.00	0.00								
FEATURES																
	All Available Vertical Features			UEPSP UEPSE	UEPVF	2.56	0.00	0.00								
NOTE: Transmission/usage charges associated with POTS circuit switched usage will also apply to circuit switched voice and/or circuit switched data transmission by B-Channels associated with 2-wire ISDN ports.																
NOTE: Access to B Channel or D Channel Packet capabilities will be available only through BFR/New Business Request Process. Rates for the packet capabilities will be determined via the Bona Fide Request/New Business Request Process.																
2-WIRE VOICE GRADE LINE PORT RATES (DID)																
	Exchange Ports-2W DID Port			UEPEX	UEPP2	8.25	120.00	18.85	61.77	3.88						
2-WIRE VOICE GRADE LINE PORT RATES (ISDN-BRI)																
	Exchange Ports-2W ISDN Port (See Notes below.)			UEPTX, UEPSX	U1PMA	13.69	73.19	53.30	47.90	10.76						
	All Features Offered			UEPTX, UEPSX	UEPVF	2.56	0.00	0.00								
	Exchange Ports-2W ISDN Port -- Channel Profiles			UEPTX, UEPSX	U1UMA	0.00	0.00	0.00								
NOTE: Transmission/usage charges associated with POTS circuit switched usage will also apply to circuit switched voice and/or circuit switched data transmission by B-Channels associated with 2-wire ISDN ports.																
NOTE: Access to B Channel or D Channel Packet capabilities will be available only through BFR/New Business Request Process. Rates for the packet capabilities will be determined via the Bona Fide Request/New Business Request Process.																
UNBUNDLED PORT with REMOTE CALL FORWARDING CAPABILITY																
UNBUNDLED REMOTE CALL FORWARDING SERVICE - RESIDENCE																
	Unbundled Remote Call Forwarding Service, Area Calling, Res			UEPVR	UERAC	2.41	2.39	2.29	1.42	1.33						
	Unbundled Remote Call Forwarding Service, Local Calling-Res			UEPVR	UERLC	2.41	2.39	2.29	1.42	1.33						
	Unbundled Remote Call Forwarding Service, InterLATA-Res			UEPVR	UERTE	2.41	2.39	2.29	1.42	1.33						
	Unbundled Remote Call Forwarding Service, IntraLATA-Res			UEPVR	UERTR	2.41	2.39	2.29	1.42	1.33						
Non-Recurring																
	Unbundled Remote Call Forwarding Service -Conversion-Switch-as-is			UEPVR	USAC2		0.0988	0.0988								
	Unbundled Remote Call Forwarding Service -Conversion with allowed change (PIC and LPIC)			UEPVR	USACC		0.0988	0.0988								
UNBUNDLED REMOTE CALL FORWARDING - Bus																
	Unbundled Remote Call Forwarding Service, Area Calling-Bus			UEPVB	UERAC	2.41	2.39	2.29	1.42	1.33						
	Unbundled Remote Call Forwarding Service, Local Calling-Bus			UEPVB	UERLC	2.41	2.39	2.29	1.42	1.33						
	Unbundled Remote Call Forwarding Service, InterLATA-Bus			UEPVB	UERTE	2.41	2.39	2.29	1.42	1.33						
	Unbundled Remote Call Forwarding Service, IntraLATA-Bus			UEPVB	UERTR	2.41	2.39	2.29	1.42	1.33						
	Unbundled Remote Call Forwarding Service Expanded and Exception Local Calling			UEPVB	UERVJ	2.41	2.39	2.29	1.42	1.33						
Non-Recurring																
	Unbundled Remote Call Forwarding Service-Conversion-Switch-as-is			UEPVB	USAC2		0.0988	0.0988								
	Unbundled Remote Call Forwarding Service -Conversion with allowed change (PIC and LPIC)			UEPVB	USACC		0.0988	0.0988								
UNBUNDLED LOCAL SWITCHING, PORT USAGE																
End Office Switching (Port Usage)																
	End Office Switching Function, Per MOU					0.0010269										
	End Office Trunk Port-Shared, Per MOU					0.000161										
Tandem Switching (Port Usage) (Local or Access Tandem)																
	Tandem Switching Function Per MOU					0.0001723										
	Tandem Trunk Port-Shared, Per MOU					0.0001828										
	Tandem Switching Function Per MOU (Melded)					0.000063441										
	Tandem Trunk Port-Shared, Per MOU (Melded)					0.000067307										

UNBUNDLED NETWORK ELEMENTS - Mississippi														Attachment: 2 Exh A			
CATEGORY	RATE ELEMENTS	Interim	Zone	BCS	USOC	RATES($)					Svc Order Submitted Elec per LSR	Svc Order Submitted Manually per LSR	Incremental Charge - Manual Svc Order vs. Electronic-1st	Incremental Charge - Manual Svc Order vs. Electronic-Add'l	Incremental Charge - Manual Svc Order vs. Electronic-Disc 1st	Incremental Charge - Manual Svc Order vs. Electronic-Disc Add'l
							Nonrecurring		NRC Disconnect		OSS Rates($)					
						Rec	First	Add'l	First	Add'l	SOMEC	SOMAN	SOMAN	SOMAN	SOMAN	SOMAN
	Melded Factor: 36.82% of the Tandem Rate															
	Common Transport															
	Common Transport-Per Mile, Per MOU					0.0000026										
	Common Transport-Facilities Termination Per MOU					0.0004541										
UNBUNDLED PORT/LOOP COMBINATIONS - COST BASED RATES																
	>Cost Based Rates are applied where BellSouth is required by FCC and/or State Commission rule to provide Unbundled Local Switching or Switch Ports.															
	>The UNE-P Switching Port Rates Reflected in the Cost Based Section Apply to Embedded Base UNE-Ps as of March 10, 2005 and Consist of the TELRIC Cost Based Rates Plus $1.00 in Accordance with the TRRO.															
	>Features shall apply to the Unbundled Port/Loop Combination - Cost Based Rate section in the same manner as they are applied to the Stand-Alone Unbundled Port section of this Rate Exhibit.															
	>End Office and Tandem Switching Usage and Common Transport Usage rates in the Port section of this rate exhibit shall apply to all combinations of loop/port network elements except for UNE Coin Port/Loop Combinations.															
	>The first and additional Port nonrecurring charges apply to Not Currently Combined Combos. For Currently Combined Combos the nonrecurring charges shall be those identified in the Nonrecurring - Currently Combined sections.															
	2-WIRE VOICE GRADE LOOP WITH 2-WIRE LINE PORT (RES)															
	UNE Port/Loop Combination Rates															
	2W VG Loop/Port Combo-Zone 1					13.22										
	2W VG Loop/Port Combo-Zone 2					18.13										
	2W VG Loop/Port Combo-Zone 3					27.26										
	2W VG Loop/Port Combo-Zone 4					45.91										
	UNE Loop Rates															
	2W VG Loop (SL1)-Zone 1		1	UEPRX	UEPLX	10.98										
	2W VG Loop (SL1)-Zone 2		2	UEPRX	UEPLX	15.91										
	2W VG Loop (SL1)-Zone 3		3	UEPRX	UEPLX	25.04										
	2W VG Loop (SL1)-Zone 4		4	UEPRX	UEPLX	43.68										
	2-Wire Voice Grade Line Port Rates (Res)															
	2W voice unbundled port-residence			UEPRX	UEPRL	2.23	40.31	19.84	24.90	6.58						
	2W voice unbundled port with Caller ID-res			UEPRX	UEPRC	2.23	40.31	19.84	24.90	6.58						
	2W voice unbundled port outgoing only-res			UEPRX	UEPRO	2.23	40.31	19.84	24.90	6.58						
	2W VG unbundled MS extended local dialing parity port with Caller ID-res			UEPRX	UEPAT	2.23	40.31	19.84	24.90	6.58						
	2W voice unbundles res, low usage line port with Caller ID (LUM)			UEPRX	UEPAP	2.23	40.31	19.84	24.90	6.58						
	2W Voice Unbundled MS Residence Dialing Plan w/o Caller ID			UEPRX	UEPWJ	2.23	40.31	19.84	24.90	6.58						
	2W voice unbundled Low Usage Line Port w/o Caller ID Capability			UEPRX	UEPRT	2.23	40.31	19.84	24.90	6.58						
	FEATURES															
	All Features Offered			UEPRX	UEPVF	2.56	0.00	0.00								
	NONRECURRING CHARGES (NRCs) - CURRENTLY COMBINED															
	2W VG Loop/Line Port Combination-Conversion-Switch-as-is			UEPRX	USAC2		0.0988	0.0988								
	2W VG Loop/Line Port Combination -Conversion-Switch with change			UEPRX	USACC		0.0988	0.0988								
	2W VG Loop/Line Port Combination -Conversion-Subsequent Database Update						0.00	0.00								
	2W VG Loop/Line Port Platform-Installation Charge at QuickService location-Not Conversion of Existing Service			UEPRX	URECC		0.0988									
	ADDITIONAL NRCs															
	2W VG Loop/Line Port Combination-Subsequent Activity			UEPRX	USAS2	0.00	0.00	0.00								
	Unbundled Misc Rate Element, Tag Loop at End User Premise			UEPRX	URETL		8.33	0.83								
	OFF/ON PREMISES EXTENSION CHANNELS															
	2W Analog VG Extension Loop – Non-Design		1	UEPRX	UEAEN	12.03	37.92	17.55	23.48	5.25						
	2W Analog VG Extension Loop – Non-Design		2	UEPRX	UEAEN	16.87	37.92	17.55	23.48	5.25						
	2W Analog VG Extension Loop – Non-Design		3	UEPRX	UEAEN	25.68	37.92	17.55	23.48	5.25						
	2W Analog VG Extension Loop – Non-Design		4	UEPRX	UEAEN	43.85	37.92	17.55	23.48	5.25						
	2W Analog VG Extension Loop – Design		1	UEPRX	UEAED	13.89	105.96	68.28	52.82	10.37						
	2W Analog VG Extension Loop – Design		2	UEPRX	UEAED	18.75	105.96	68.28	52.82	10.37						
	2W Analog VG Extension Loop – Design		3	UEPRX	UEAED	27.55	105.96	68.28	52.82	10.37						
	2W Analog VG Extension Loop – Design		4	UEPRX	UEAED	45.72	105.96	68.28	52.82	10.37						
	INTEROFFICE TRANSPORT															
	Interoffice Transport-Dedicated-2W VG-Facility Termination			UEPRX	U1TV2	20.32	40.77	27.57	17.26	7.11						
	Interoffice Transport-Dedicated-2W VG-Per Mile or Fraction Mile			UEPRX	U1TVM	0.0088	0.00	0.00								
	2-WIRE VOICE GRADE LOOP WITH 2-WIRE LINE PORT (BUS)															
	UNE Port/Loop Combination Rates															
	2W VG Loop/Port Combo-Zone 1					13.22										
	2W VG Loop/Port Combo-Zone 2					18.13										

CATEGORY	RATE ELEMENTS	Interim	Zone	BCS	USOC	RATES($)					Svc Order Submitted Elec per LSR	Svc Order Submitted Manually per LSR	Incremental Charge - Manual Svc Order vs. Electronic-1st	Incremental Charge - Manual Svc Order vs. Electronic-Add'l	Incremental Charge - Manual Svc Order vs. Electronic-Disc 1st	Incremental Charge - Manual Svc Order vs. Electronic-Disc Add'l
							Nonrecurring		NRC Disconnect		OSS Rates($)					
						Rec	First	Add'l	First	Add'l	SOMEC	SOMAN	SOMAN	SOMAN	SOMAN	SOMAN
	2W VG Loop/Port Combo-Zone 3					27.26										
	2W VG Loop/Port Combo-Zone 4					45.91										
UNE Loop Rates																
	2W VG Loop (SL1)-Zone 1		1	UEPBX	UEPLX	10.98										
	2W VG Loop (SL1)-Zone 2		2	UEPBX	UEPLX	15.91										
	2W VG Loop (SL1)-Zone 3		3	UEPBX	UEPLX	25.04										
	2W VG Loop (SL1)-Zone 4		4	UEPBX	UEPLX	43.68										
2-Wire Voice Grade Line Port (Bus)																
	2W voice unbundled port w/o Caller ID-bus			UEPBX	UEPBL	2.23	40.31	19.84	24.90	6.58						
	2W voice unbundled port with Caller + E484 ID-bus			UEPBX	UEPBC	2.23	40.31	19.84	24.90	6.58						
	2W voice unbundled port outgoing only-bus			UEPBX	UEPBO	2.23	40.31	19.84	24.90	6.58						
	2W VG unbundled MS extended local dialing parity port with Caller ID-bus			UEPBX	UEPAY	2.23	40.31	19.84	24.90	6.58						
	2W voice unbundled incoming only port with Caller ID-Bus			UEPBX	UEPB1	2.23	40.31	19.84	24.90	6.58						
	2W Voice Unbundled MS Business Dialing Plan w/o Caller ID			UEPBX	UEPWK	2.23	40.31	19.84	24.90	6.58						
	2W voice unbundled Incoming Only Port w/o Caller ID Capability			UEPBX	UEPBE	2.23	40.31	19.84	24.90	6.58						
FEATURES																
	All Features Offered			UEPBX	UEPVF	2.56	0.00	0.00								
NONRECURRING CHARGES (NRCs) - CURRENTLY COMBINED																
	2W VG Loop/Line Port Combination-Conversion-Switch-as-is			UEPBX	USAC2		0.0988	0.0988								
	2W VG Loop/Line Port Combination -Conversion-Switch with change			UEPBX	USACC		0.0988	0.0988								
	2W VG Loop/Line Port Combination -Conversion-Subsequent Database Update						0.00	0.00								
ADDITIONAL NRCs																
	2W VG Loop/Line Port Combination-Subsequent Activity			UEPBX	USAS2		0.00	0.00								
	Unbundled Misc Rate Element, Tag Loop at End User Premise			UEPBX	URETL		8.33	0.83								
OFF/ON PREMISES EXTENSION CHANNELS																
	2W Analog VG Extension Loop – Non-Design		1	UEPBX	UEAEN	12.03	37.92	17.55	23.48	5.25						
	2W Analog VG Extension Loop – Non-Design		2	UEPBX	UEAEN	16.87	37.92	17.55	23.48	5.25						
	2W Analog VG Extension Loop – Non-Design		3	UEPBX	UEAEN	25.68	37.92	17.55	23.48	5.25						
	2W Analog VG Extension Loop – Non-Design		4	UEPBX	UEAEN	43.85	37.92	17.55	23.48	5.25						
	2W Analog VG Extension Loop – Design		1	UEPBX	UEAED	13.89	105.96	68.28	52.82	10.37						
	2W Analog VG Extension Loop – Design		2	UEPBX	UEAED	18.75	105.96	68.28	52.82	10.37						
	2W Analog VG Extension Loop – Design		3	UEPBX	UEAED	27.55	105.96	68.28	52.82	10.37						
	2W Analog VG Extension Loop – Design		4	UEPBX	UEAED	45.72	105.96	68.28	52.82	10.37						
INTEROFFICE TRANSPORT																
	Interoffice Transport-Dedicated-2W VG-Facility Termination			UEPBX	U1TV2	20.32	40.77	27.57	17.26	7.11						
	Interoffice Transport-Dedicated-2W VG-Per Mile or Fraction Mile			UEPBX	U1TVM	0.0088	0.00	0.00								
2-WIRE VOICE GRADE LOOP WITH 2-WIRE LINE PORT (RES - PBX)																
UNE Port/Loop Combination Rates																
	2W VG Loop/Port Combo-Zone 1					13.22										
	2W VG Loop/Port Combo-Zone 2					18.13										
	2W VG Loop/Port Combo-Zone 3					27.26										
	2W VG Loop/Port Combo-Zone 4					45.91										
UNE Loop Rates																
	2W VG Loop (SL 1)-Zone 1		1	UEPRG	UEPLX	10.98										
	2W VG Loop (SL 1)-Zone 2		2	UEPRG	UEPLX	15.91										
	2W VG Loop (SL 1)-Zone 3		3	UEPRG	UEPLX	25.04										
	2W VG Loop (SL 1)-Zone 4		4	UEPRG	UEPLX	43.68										
2-Wire Voice Grade Line Port Rates (RES - PBX)																
	2W VG Unbundled Combination 2-Way PBX Trunk Port-Res			UEPRG	UEPRD	2.23	69.37	32.48	37.86	6.17						
FEATURES																
	All Features Offered			UEPRG	UEPVF	2.56	0.00	0.00								
NONRECURRING CHARGES (NRCs) - CURRENTLY COMBINED																
	2W VG Loop/ Line Port Combination (PBX)-Conversion-Switch-As-Is			UEPRG	USAC2		7.96	1.91								
	2W VG Loop/ Line Port Combination (PBX)-Conversion-Switch with Change			UEPRG	USACC		7.96	1.91								
	2W VG Loop/Line Port Combination -Conversion-Subsequent Database Update						0.00	0.00								

UNBUNDLED NETWORK ELEMENTS - Mississippi														Attachment: 2 Exh A			
CATEGORY	RATE ELEMENTS	Interim	Zone	BCS	USOC	RATES($)					Svc Order Submitted Elec per LSR	Svc Order Submitted Manually per LSR	Incremental Charge - Manual Svc Order vs. Electronic-1st	Incremental Charge - Manual Svc Order vs. Electronic-Add'l	Incremental Charge - Manual Svc Order vs. Electronic-Disc 1st	Incremental Charge - Manual Svc Order vs. Electronic-Disc Add'l
							Nonrecurring		NRC Disconnect		OSS Rates($)					
						Rec	First	Add'l	First	Add'l	SOMEC	SOMAN	SOMAN	SOMAN	SOMAN	SOMAN
ADDITIONAL NRCs																
	2W VG Loop/ Line Port Combination (PBX)-Subsequent Activity			UEPRG	USAS2	0.00	0.00	0.00								
	PBX Subsequent Activity-Change/Rearrange Multiline Hunt Group						7.36	7.36								
	Unbundled Misc Rate Element, Tag Loop at End User Premise			UEPRG	URETL		8.33	0.83								
OFF/ON PREMISES EXTENSION CHANNELS																
	Local Channel VG, per termination		1	UEPRG	P2JHX	13.89	105.96	68.28	52.82	10.37						
	Local Channel VG, per termination		2	UEPRG	P2JHX	18.75	105.96	68.28	52.82	10.37						
	Local Channel VG, per termination		3	UEPRG	P2JHX	27.55	105.96	68.28	52.82	10.37						
	Local Channel VG, per termination		4	UEPRG	P2JHX	45.72	105.96	68.28	52.82	10.37						
INTEROFFICE TRANSPORT																
	Interoffice Transport-Dedicated-2W VG-Facility Termination			UEPRG	U1TV2	20.32	40.77	27.57	17.26	7.11						
	Interoffice Transport-Dedicated-2W VG-Per Mile or Fraction Mile			UEPRG	U1TVM	0.0088	0.00	0.00								
2-WIRE VOICE GRADE LOOP WITH 2-WIRE LINE PORT (BUS - PBX)																
UNE Port/Loop Combination Rates																
	2W VG Loop/Port Combo-Zone 1					13.22										
	2W VG Loop/Port Combo-Zone 2					18.13										
	2W VG Loop/Port Combo-Zone 3					27.26										
	2W VG Loop/Port Combo-Zone 4					45.91										
UNE Loop Rates																
	2W VG Loop (SL 1)-Zone 1		1	UEPPX	UEPLX	10.98										
	2W VG Loop (SL 1)-Zone 2		2	UEPPX	UEPLX	15.91										
	2W VG Loop (SL 1)-Zone 3		3	UEPPX	UEPLX	25.04										
	2W VG Loop (SL 1)-Zone 4		4	UEPPX	UEPLX	43.68										
2-Wire Voice Grade Line Port Rates (BUS - PBX)																
	Line Side Unbundled Combination 2-Way PBX Trunk Port-Bus			UEPPX	UEPPC	2.23	69.37	32.48	37.86	6.17						
	Line Side Unbundled Outward PBX Trunk Port-Bus			UEPPX	UEPPO	2.23	69.37	32.48	37.86	6.17						
	Line Side Unbundled Incoming PBX Trunk Port-Bus			UEPPX	UEPP1	2.23	69.37	32.48	37.86	6.17						
	2W Voice Unbundled PBX LD Terminal Ports			UEPPX	UEPLD	2.23	69.37	32.48	37.86	6.17						
	2W Voice Unbundled 2-Way Combination PBX Usage Port			UEPPX	UEPXA	2.23	69.37	32.48	37.86	6.17						
	2W Voice Unbundled PBX Toll Terminal Hotel Ports			UEPPX	UEPXB	2.23	69.37	32.48	37.86	6.17						
	2W Voice Unbundled PBX LD DDD Terminals Port			UEPPX	UEPXC	2.23	69.37	32.48	37.86	6.17						
	2W Voice Unbundled PBX LD Terminal Switchboard Port			UEPPX	UEPXD	2.23	69.37	32.48	37.86	6.17						
	2W Voice Unbundled PBX LD Terminal Switchboard IDD Capable Port			UEPPX	UEPXE	2.23	69.37	32.48	37.86	6.17						
	2W Voice Unbundled 2-Way PBX Hotel/Hospital Economy Administrative Calling Port			UEPPX	UEPXL	2.23	69.37	32.48	37.86	6.17						
	2W Voice Unbundled 2-Way PBX Hotel/Hospital Economy Rm Calling Port			UEPPX	UEPXM	2.23	69.37	32.48	37.86	6.17						
	2W Voice Unbundled 1-Way Outgoing PBX Hotel/Hospital Discount Rm Calling Port			UEPPX	UEPXO	2.23	69.37	32.48	37.86	6.17						
	2W Voice Unbundled 2-Way PBX MS Local Economy Calling Port			UEPPX	UEPXQ	2.23	69.37	32.48	37.86	6.17						
	2W Voice Unbundled 2-Way PBX MS Local Optional Calling Port			UEPPX	UEPXR	2.23	69.37	32.48	37.86	6.17						
	2W Voice Unbundled 1-Way Outgoing PBX Measured Port			UEPPX	UEPXS	2.23	69.37	32.48	37.86	6.17						
	MS PBX 2-Way Combo Local Opt 2 Calling Port			UEPPX	UEPA5	2.23	69.37	32.48	37.86	6.17						
FEATURES																
	All Features Offered			UEPPX	UEPVF	2.56	0.00	0.00								
NONRECURRING CHARGES (NRCs) - CURRENTLY COMBINED																
	2W VG Loop/ Line Port Combination (PBX)-Conversion-Switch-As-Is			UEPPX	USAC2		7.96	1.91								
	2W VG Loop/ Line Port Combination (PBX)-Conversion-Switch with Change			UEPPX	USACC		7.96	1.91								
	2W VG Loop/Line Port Combination -Conversion-Subsequent Database Update						0.00	0.00								
ADDITIONAL NRCs																
	2W VG Loop/ Line Port Combination (PBX)-Subsequent Activity			UEPPX	USAS2	0.00	0.00	0.00								
	PBX Subsequent Activity-Change/Rearrange Multiline Hunt Group						7.36	7.36								
	Unbundled Misc Rate Element, Tag Loop at End User Premise			UEPPX	URETL		8.33	0.83								
OFF/ON PREMISES EXTENSION CHANNELS																
	Local Channel VG, per termination		1	UEPPX	P2JHX	13.89	105.96	68.28	52.82	10.37						
	Local Channel VG, per termination		2	UEPPX	P2JHX	18.75	105.96	68.28	52.82	10.37						

CATEGORY	RATE ELEMENTS	Interim	Zone	BCS	USOC	RATES($)					Svc Order Submitted Elec per LSR	Svc Order Submitted Manually per LSR	Incremental Charge - Manual Svc Order vs. Electronic-1st	Incremental Charge - Manual Svc Order vs. Electronic-Add'l	Incremental Charge - Manual Svc Order vs. Electronic-Disc 1st	Incremental Charge - Manual Svc Order vs. Electronic-Disc Add'l
							Nonrecurring		NRC Disconnect		OSS Rates($)					
						Rec	First	Add'l	First	Add'l	SOMEC	SOMAN	SOMAN	SOMAN	SOMAN	SOMAN
	Local Channel VG, per termination		3	UEPPX	P2JHX	27.55	105.96	68.28	52.82	10.37						
	Local Channel VG, per termination		4	UEPPX	P2JHX	45.72	105.96	68.28	52.82	10.37						
INTEROFFICE TRANSPORT																
	Interoffice Transport-Dedicated-2W VG-Facility Termination			UEPPX	U1TV2	20.32	40.77	27.57	17.26	7.11						
	Interoffice Transport-Dedicated-2W VG-Per Mile or Fraction Mile			UEPPX	U1TVM	0.0088	0.00	0.00								
2-WIRE VOICE GRADE LOOP WITH 2-WIRE ANALOG LINE COIN PORT																
UNE Port/Loop Combination Rates																
	2W VG Coin Port/Loop Combo – Zone 1					13.22										
	2W VG Coin Port/Loop Combo – Zone 2					18.13										
	2W VG Coin Port/Loop Combo – Zone 3					27.26										
	2W VG Coin Port/Loop Combo – Zone 4					45.91										
UNE Loop Rates																
	2W VG Loop (SL1)-Zone 1		1	UEPCO	UEPLX	10.98										
	2W VG Loop (SL1)-Zone 2		2	UEPCO	UEPLX	15.91										
	2W VG Loop (SL1)-Zone 3		3	UEPCO	UEPLX	25.04										
	2W VG Loop (SL1)-Zone 4		4	UEPCO	UEPLX	43.68										
2-Wire Voice Grade Line Ports (COIN)																
	2W Coin 2-Way w/o Operator Screening and w/o Blocking (AL, KY, LA, MS)			UEPCO	UEPRF	2.23	40.31	19.84	24.90	6.58						
	2W Coin 2-Way w/o Operator Screening and w/o Blocking; with Dialing Parity (Note 3) (MS)			UEPCO	UEPMC	2.23	40.31	19.84	24.90	6.58						
	2W Coin 2-Way with Operator Screening and Blocking: 011, 900/976, 1+DDD (AL, KY, LA, MS)			UEPCO	UEPRA	2.23	40.31	19.84	24.90	6.58						
	2W Coin 2-W with Operator Screening and Blocking: 011, 900/976, 1+DDD; with Dialing Parity (MS)			UEPCO	UEPMA	2.23	40.31	19.84	24.90	6.58						
	2W Coin 2-Way with Operator Screening and 011 Blocking (AL, LA, MS)			UEPCO	UEPRB	2.23	40.31	19.84	24.90	6.58						
	2W Coin 2-Way with Operator Screening and 011 Blocking; with Dialing Parity (MS)			UEPCO	UEPMB	2.23	40.31	19.84	24.90	6.58						
	2W Coin 2-Way with Operator Screening & Blocking: 900/976, 1+DDD, 011+, & Local (AL, KY, LA, MS)			UEPCO	UEPCD	2.23	40.31	19.84	24.90	6.58						
	2W Coin 2-W Operator Screening: 900 Block: 900/976, 1+DDD, 011+, Local; with Dialing Parity (MS)			UEPCO	UEPCJ	2.23	40.31	19.84	24.90	6.58						
	2W Coin Outward w/o Blocking and w/o Operator Screening (KY, LA, MS)			UEPCO	UEPRN	2.23	40.31	19.84	24.90	6.58						
	2W Coin Outward w/o Blocking and w/o Operator Screening; With Dailing Parity (MS)			UEPCO	UEPME	2.23	40.31	19.84	24.90	6.58						
	2W Coin Outward with Operator Screening and 011 Blocking (GA, KY, MS)			UEPCO	UEPRJ	2.23	40.31	19.84	24.90	6.58						
	2W Coin Outward with Operator Screening and 011 Blocking; with Dialing Parity (MS)			UEPCO	UEPMD	2.23	40.31	19.84	24.90	6.58						
	2W Coin Outward with Operator Screening and Blocking: 011, 900/976, 1+DDD (AL, KY, LA, MS)			UEPCO	UEPRH	2.23	40.31	19.84	24.90	6.58						
	2W Coin Outward Operator Screening & Blocking: 900/976, 1+DDD, 011+, and Local (AL, KY, LA, MS)			UEPCO	UEPCN	2.23	40.31	19.84	24.90	6.58						
	2W Coin Out Operator Screen & Block: 900/976, 1+DDD, 011+, and Local; with Dialing Parity (MS)			UEPCO	UEPCS	2.23	40.31	19.84	24.90	6.58						
	2W 2-Way Smartline with 900/976 (all states except LA)			UEPCO	UEPCK	2.23	40.31	19.84	24.90	6.58						
	2W Coin Outward Smartline with 900/976 (all states except LA)			UEPCO	UEPCR	1.23	40.31	19.84	24.90	6.58						
ADDITIONAL UNE COIN PORT/LOOP (RC)																
	UNE Coin Port/Loop Combo Usage (Flat Rate)			UEPCO	URECU	4.62	0.00	0.00	0.00	0.00						
NONRECURRING CHARGES - CURRENTLY COMBINED																
	2W VG Loop/Line Port Combination -Conversion-Switch-as-is			UEPCO	USAC2		0.0988	0.0988								
	2W VG Loop/Line Port Combination -Conversion-Switch with change			UEPCO	USACC		0.0988	0.0988								
ADDITIONAL NRCs																
	2W VG Loop/Line Port Combination-Subsequent Activity			UEPCO	USAS2		0.00	0.00								
	Unbundled Misc Rate Element, Tag Loop at End User Premise			UEPCO	URETL		8.33	0.83								
2-WIRE VOICE LOOP/ 2WIRE VOICE GRADE IO TRANSPORT/ 2-WIRE LINE PORT (RES)																
UNE Port/Loop Combination Rates																

CATEGORY	RATE ELEMENTS	Interim	Zone	BCS	USOC	RATES($)					Svc Order Submitted Elec per LSR	Svc Order Submitted Manually per LSR	Incremental Charge - Manual Svc Order vs. Electronic-1st	Incremental Charge - Manual Svc Order vs. Electronic-Add'l	Incremental Charge - Manual Svc Order vs. Electronic-Disc 1st	Incremental Charge - Manual Svc Order vs. Electronic-Disc Add'l
							Nonrecurring		NRC Disconnect		OSS Rates($)					
						Rec	First	Add'l	First	Add'l	SOMEC	SOMAN	SOMAN	SOMAN	SOMAN	SOMAN
	2W VG Loop/IO Tranport/Port Combo-Zone 1					16.16										
	2W VG Loop/IO Tranport/Port Combo-Zone 2					21.02										
	2W VG Loop/IO Tranport/Port Combo-Zone 3					29.82										
	2W VG Loop/IO Tranport/Port Combo-Zone 4					47.99										
UNE Loop Rates																
	2W VG Loop (SL2)-Zone 1		1	UEPFR	UECF2	13.89										
	2W VG Loop (SL2)-Zone 2		2	UEPFR	UECF2	18.75										
	2W VG Loop (SL2)-Zone 3		3	UEPFR	UECF2	27.55										
	2W VG Loop (SL2)-Zone 4		4	UEPFR	UECF2	45.72										
2-Wire Voice Grade Line Port Rates (Res)																
	2W voice unbundled port-residence			UEPFR	UEPRL	2.27	108.35	70.57	54.24	11.70						
	2W voice unbundled port with Caller ID-res			UEPFR	UEPRC	2.27	108.35	70.57	54.24	11.70						
	2W voice unbundled port outgoing only-res			UEPFR	UEPRO	2.27	108.35	70.57	54.24	11.70						
	2W VG unbundled MS extended local dialing parity port with Caller ID-res			UEPFR	UEPAT	2.27	108.35	70.57	54.24	11.70						
	2W voice unbundles res, low usage line port with Caller ID (LUM)			UEPFR	UEPAP	2.27	108.35	70.57	54.24	11.70						
	2W Voice Unbundled MS Residence Dialing Plan w/o Caller ID			UEPFR	UEPWJ	2.27	108.35	70.57	54.24	11.70						
INTEROFFICE TRANSPORT																
	Interoffice Transport-Dedicated-2W VG-Facility Termination			UEPFR	U1TV2	20.32	40.77	27.57	17.26	7.11						
	Interoffice Transport-Dedicated-2W VG-Per Mile or Fraction Mile			UEPFR	1L5XX	0.0088										
FEATURES																
	All Features Offered			UEPFR	UEPVF	2.56	0.00	0.00								
NONRECURRING CHARGES (NRCs) - CURRENTLY COMBINED																
	2W Loop/Dedicated IO Transport/2W Line Port Combination-Conversion-Switch-as-is			UEPFR	USAC2		16.94	3.72								
	2W Loop/Dedicated IO Transport/2W Line Port Combination-Conversion-Switch-With-Change			UEPFR	USACC		16.94	3.72								
	Unbundled Misc Rate Element, Tag Designed Loop at End User Premise			UEPFR	URETN		11.19	1.10								
2-WIRE VOICE LOOP/ 2WIRE VOICE GRADE IO TRANSPORT/ 2-WIRE LINE PORT (BUS)																
UNE Port/Loop Combination Rates																
	2W VG Loop/IO Tranport/Port Combo-Zone 1					16.16										
	2W VG Loop/IO Tranport/Port Combo-Zone 2					21.02										
	2W VG Loop/IO Tranport/Port Combo-Zone 3					29.82										
	2W VG Loop/IO Tranport/Port Combo-Zone 4					47.99										
UNE Loop Rates																
	2W VG Loop (SL2)-Zone 1		1	UEPFB	UECF2	13.89										
	2W VG Loop (SL2)-Zone 2		2	UEPFB	UECF2	18.75										
	2W VG Loop (SL2)-Zone 3		3	UEPFB	UECF2	27.55										
	2W VG Loop (SL2)-Zone 4		4	UEPFB	UECF2	45.72										
2-Wire Voice Grade Line Port (Bus)																
	2W voice unbundled port w/o Caller ID-bus			UEPFB	UEPBL	2.27	108.35	70.57	54.24	11.70						
	2W voice unbundled port with Caller + E484 ID-bus			UEPFB	UEPBC	2.27	108.35	70.57	54.24	11.70						
	2W voice unbundled port outgoing only-bus			UEPFB	UEPBO	2.27	108.35	70.57	54.24	11.70						
	2W VG unbundled MS extended local dialing parity port with Caller ID-bus			UEPFB	UEPAY	2.27	108.35	70.57	54.24	11.70						
	2W voice unbundled incoming only port with Caller ID-Bus			UEPFB	UEPB1	2.27	108.35	70.57	54.24	11.70						
	2W Voice Unbundled MS Business Dialing Plan w/o Caller ID			UEPFB	UEPWK	2.27	108.35	70.57	54.24	11.70						
INTEROFFICE TRANSPORT																
	Interoffice Transport-Dedicated-2W VG-Facility Termination			UEPFB	U1TV2	20.32	40.77	27.57	17.26	7.11						
	Interoffice Transport-Dedicated-2W VG-Per Mile or Fraction Mile			UEPFB	1L5XX	0.0088										
FEATURES																
	All Features Offered			UEPFB	UEPVF	2.56	0.00	0.00								
NONRECURRING CHARGES (NRCs) - CURRENTLY COMBINED																
	2W Loop/Dedicated IO Transport/2W Line Port Combination-Conversion-Switch-as-is			UEPFB	USAC2		16.94	3.72								
	2W Loop/Dedicated IO Transport/2W Line Port Combination-Conversion-Switch with change			UEPFB	USACC		16.94	3.72								

UNBUNDLED NETWORK ELEMENTS - Mississippi														Attachment: 2 Exh A			
CATEGORY	RATE ELEMENTS	Interim	Zone	BCS	USOC	RATES($)					Svc Order Submitted Elec per LSR	Svc Order Submitted Manually per LSR	Incremental Charge - Manual Svc Order vs. Electronic-1st	Incremental Charge - Manual Svc Order vs. Electronic-Add'l	Incremental Charge - Manual Svc Order vs. Electronic-Disc 1st	Incremental Charge - Manual Svc Order vs. Electronic-Disc Add'l
							Nonrecurring		NRC Disconnect		OSS Rates($)					
						Rec	First	Add'l	First	Add'l	SOMEC	SOMAN	SOMAN	SOMAN	SOMAN	SOMAN
	Unbundled Misc Rate Element, Tag Designed Loop at End User Premise			UEPFB	URETN		11.19	1.10								
2-WIRE VOICE LOOP/ 2WIRE VOICE GRADE IO TRANSPORT/ 2-WIRE LINE PORT (PBX)																
UNE Port/Loop Combination Rates																
	2W VG Loop/IO Tranport/Port Combo-Zone 1					16.16										
	2W VG Loop/IO Tranport/Port Combo-Zone 2					21.02										
	2W VG Loop/IO Tranport/Port Combo-Zone 3					29.82										
	2W VG Loop/IO Tranport/Port Combo-Zone 4					47.99										
UNE Loop Rates																
	2W VG Loop (SL2)-Zone 1		1	UEPFP	UECF2	13.89										
	2W VG Loop (SL2)-Zone 2		2	UEPFP	UECF2	18.75										
	2W VG Loop (SL2)-Zone 3		3	UEPFP	UECF2	27.55										
	2W VG Loop (SL2)-Zone 4		4	UEPFP	UECF2	45.72										
2-Wire Voice Grade Line Port Rates (BUS - PBX)																
	Line Side Unbundled Combination 2-Way PBX Trunk Port-Bus			UEPFP	UEPPC	2.27	137.41	80.14	67.20	11.29						
	Line Side Unbundled Outward PBX Trunk Port-Bus			UEPFP	UEPPO	2.27	137.41	80.14	67.20	11.29						
	Line Side Unbundled Incoming PBX Trunk Port-Bus			UEPFP	UEPP1	2.27	137.41	80.14	67.20	11.29						
	2W Voice Unbundled PBX LD Terminal Ports			UEPFP	UEPLD	2.27	137.41	80.14	67.20	11.29						
	2W Voice Unbundled 2-Way Combination PBX Usage Port			UEPFP	UEPXA	2.27	137.41	80.14	67.20	11.29						
	2W Voice Unbundled PBX Toll Terminal Hotel Ports			UEPFP	UEPXB	2.27	137.41	80.14	67.20	11.29						
	2W Voice Unbundled PBX LD DDD Terminals Port			UEPFP	UEPXC	2.27	137.41	80.14	67.20	11.29						
	2W Voice Unbundled PBX LD Terminal Switchboard Port			UEPFP	UEPXD	2.27	137.41	80.14	67.20	11.29						
	2W Voice Unbundled PBX LD Terminal Switchboard IDD Capable Port			UEPFP	UEPXE	2.27	137.41	80.14	67.20	11.29						
	2W Voice Unbundled 2-Way PBX Hotel/Hospital Economy Administrative Calling Port			UEPFP	UEPXL	2.27	137.41	80.14	67.20	11.29						
	2W Voice Unbundled 2-Way PBX Hotel/Hospital Economy Rm Calling Port			UEPFP	UEPXM	2.27	137.41	80.14	67.20	11.29						
	2W Voice Unbundled 1-Way Outgoing PBX Hotel/Hospital Discount Rm Calling Port			UEPFP	UEPXO	2.27	137.41	80.14	67.20	11.29						
	2W Voice Unbundled 2-Way PBX MS Local Economy Calling Port			UEPFP	UEPXQ	2.27	137.41	80.14	67.20	11.29						
	2W Voice Unbundled 2-Way PBX MS Local Optional Calling Port			UEPFP	UEPXR	2.27	137.41	80.14	67.20	11.29						
	2W Voice Unbundled 1-Way Outgoing PBX Measured Port			UEPFP	UEPXS	2.27	137.41	80.14	67.20	11.29						
	MS PBX 2-Way Combo Local Opt 2 Calling Port			UEPFP	UEPA5	2.27	137.41	80.14	67.20	11.29						
INTEROFFICE TRANSPORT																
	Interoffice Transport-Dedicated-2W VG-Facility Termination			UEPFP	U1TV2	20.32	40.77	27.57	17.26	7.11						
	Interoffice Transport-Dedicated-2W VG-Per Mile or Fraction Mile			UEPFP	1L5XX	0.0088										
FEATURES																
	All Features Offered			UEPFP	UEPVF	2.56	0.00	0.00								
NONRECURRING CHARGES (NRCs) - CURRENTLY COMBINED																
	2W Loop/Dedicated IO Transport/2W Line Port Combination-Conversion-Switch-as-is			UEPFP	USAC2		16.94	3.72								
	2W Loop/Dedicated IO Transport/2W Line Port Combination-Conversion-Switch with change			UEPFP	USACC		16.94	3.72								
	Unbundled Misc Rate Element, Tag Designed Loop at End User Premise			UEPFP	URETN		11.19	1.10								
UNBUNDLED PORT/LOOP COMBINATIONS - COST BASED RATES																
2-WIRE VOICE GRADE LOOP- BUS ONLY - WITH 2-WIRE DID TRUNK PORT																
UNE Port/Loop Combination Rates																
	2W VG Loop/2W DID Trunk Port Combo-UNE Zone 1					22.32										
	2W VG Loop/2W DID Trunk Port Combo-UNE Zone 2					27.16										
	2W VG Loop/2W DID Trunk Port Combo-UNE Zone 3					35.98										
	2W VG Loop/2W DID Trunk Port Combo-UNE Zone 4					54.15										
UNE Loop Rates																
	2W Analog VG Loop- (SL2)-UNE Zone 1		1	UEPPX	UECD1	13.89										
	2W Analog VG Loop- (SL2)-UNE Zone 2		2	UEPPX	UECD1	18.75										
	2W Analog VG Loop- (SL2)-UNE Zone 3		3	UEPPX	UECD1	27.55										
	2W Analog VG Loop- (SL2)-UNE Zone 4		4	UEPPX	UECD1	45.72										
UNE Port Rate																

CATEGORY	RATE ELEMENTS	Interim	Zone	BCS	USOC	RATES($)					Svc Order Submitted Elec per LSR	Svc Order Submitted Manually per LSR	Incremental Charge - Manual Svc Order vs. Electronic-1st	Incremental Charge - Manual Svc Order vs. Electronic-Add'l	Incremental Charge - Manual Svc Order vs. Electronic-Disc 1st	Incremental Charge - Manual Svc Order vs. Electronic-Disc Add'l
							Nonrecurring		NRC Disconnect		OSS Rates($)					
						Rec	First	Add'l	First	Add'l	SOMEC	SOMAN	SOMAN	SOMAN	SOMAN	SOMAN
	Exchange Ports-2W DID Port			UEPPX	UEPD1	8.43	225.96	87.13	114.59	14.25						
	NONRECURRING CHARGES - CURRENTLY COMBINED															
	2W VG Loop/2W DID Trunk Port Combination -Switch-as-is			UEPPX	USAC1		7.35	1.88								
	2W VG Loop/2W DID Trunk Port Conversion with BellSouth Allowable Changes			UEPPX	USA1C		7.35	1.88								
	ADDITIONAL NRCs															
	2W DID Subsequent Activity-Add Trunks, Per Trunk			UEPPX	USAS1		26.94	26.94								
	Unbundled Misc Rate Element, Tag Designed Loop at End User Premise			UEPPX	URETN		11.19	1.10								
	Telephone Number/Trunk Group Establisment Charges															
	DID Trunk Termination (One Per Port)			UEPPX	NDT	0.00	0.00	0.00								
	Additional DID Numbers for each Group of 20 DID Numbers			UEPPX	ND4	0.00	0.00	0.00								
	DID Numbers, Non- consecutive DID Numbers , Per Number			UEPPX	ND5	0.00	0.00	0.00								
	Reserve Non-Consecutive DID numbers			UEPPX	ND6	0.00	0.00	0.00								
	Reserve DID Numbers			UEPPX	NDV	0.00	0.00	0.00								
	2-WIRE ISDN DIGITAL GRADE LOOP WITH 2-WIRE ISDN DIGITAL LINE SIDE PORT															
	UNE Port/Loop Combination Rates															
	2W ISDN Digital Grade Loop/2W ISDN Digital Line Side Port -UNE Zone 1					29.29										
	2W ISDN Digital Grade Loop/2W ISDN Digital Line Side Port -UNE Zone 2					36.00										
	2W ISDN Digital Grade Loop/2W ISDN Digital Line Side Port -UNE Zone 3					46.18										
	2W ISDN Digital Grade Loop/2W ISDN Digital Line Side Port -UNE Zone 4					68.61										
	UNE Loop Rates															
	2W ISDN Digital Grade Loop-UNE Zone 1		1	UEPPB UEPPR	USL2X	18.26										
	2W ISDN Digital Grade Loop-UNE Zone 2		2	UEPPB UEPPR	USL2X	24.67										
	2W ISDN Digital Grade Loop-UNE Zone 3		3	UEPPB UEPPR	USL2X	34.85										
	2W ISDN Digital Grade Loop-UNE Zone 4		4	UEPPB UEPPR	USL2X	57.28										
	UNE Port Rate															
	Exchange Port-2W ISDN Line Side Port			UEPPR	UEPPR	11.33	190.80	133.22	100.72	21.13						
	Exchange Port-2W ISDN Line Side Port			UEPPB	UEPPB	11.33	190.80	133.22	100.72	21.13						
	NONRECURRING CHARGES - CURRENTLY COMBINED															
	2W ISDN Digital Grade Loop/2W ISDN Line Side Port Combination-Conversion			UEPPB UEPPR	USACB	0.00	38.73	27.17								
	ADDITIONAL NRCs															
	Unbundled Misc Rate Element, Tag Designed Loop at End User Premise			UEPPB UEPPR	URETN		11.19	1.10								
	Unbundled Misc Rate Element, Tag Loop at End User Premise			UEPPB UEPPR	URETL		8.33	0.83								
	B-CHANNEL USER PROFILE ACCESS:															
	CVS/CSD (DMS/5ESS)			UEPPB UEPPR	U1UCA	0.00	0.00	0.00								
	CVS (EWSD)			UEPPB UEPPR	U1UCB	0.00	0.00	0.00								
	CSD			UEPPB UEPPR	U1UCC	0.00	0.00	0.00								
	B-CHANNEL AREA PLUS USER PROFILE ACCESS: (AL,KY,LA,MS SC,MS, & TN)															
	CVS/CSD (DMS/5ESS)			UEPPB UEPPR	U1UCD	0.00	0.00	0.00								
	CVS (EWSD)			UEPPB UEPPR	U1UCE	0.00	0.00	0.00								
	CSD			UEPPB UEPPR	U1UCF	0.00	0.00	0.00								
	USER TERMINAL PROFILE															
	User Terminal Profile (EWSD only)			UEPPB UEPPR	U1UMA	0.00	0.00	0.00								
	VERTICAL FEATURES															
	All Vertical Features-One per Channel B User Profile			UEPPB UEPPR	UEPVF	2.56	0.00	0.00								
	INTEROFFICE CHANNEL MILEAGE															
	Interoffice Channel mileage each, including first mile and facilities termination			UEPPB UEPPR	M1GNC	22.5298	40.77	27.57	17.26	7.11						
	Interoffice Channel mileage each, additional mile			UEPPB UEPPR	M1GNM	0.0098	0.00	0.00								
UNBUNDLED CENTREX PORT/LOOP COMBINATIONS - COST BASED RATES																
	UNE-P CENTREX - 1AESS - (Valid in AL,FL,GA,KY,LA,MS,&TN only)															

CATEGORY	RATE ELEMENTS	Interim	Zone	BCS	USOC	RATES($)					Svc Order Submitted Elec per LSR	Svc Order Submitted Manually per LSR	Incremental Charge - Manual Svc Order vs. Electronic-1st	Incremental Charge - Manual Svc Order vs. Electronic-Add'l	Incremental Charge - Manual Svc Order vs. Electronic-Disc 1st	Incremental Charge - Manual Svc Order vs. Electronic-Disc Add'l
							Nonrecurring		NRC Disconnect		OSS Rates($)					
						Rec	First	Add'l	First	Add'l	SOMEC	SOMAN	SOMAN	SOMAN	SOMAN	SOMAN
2-Wire VG Loop/2-Wire Voice Grade Port (Centrex) Combo																
UNE Port/Loop Combination Rates (Non-Design)																
	2W VG Loop/2W VG Port (Centrex) Port Combo-Non-Design					13.22										
	2W VG Loop/2W VG Port (Centrex)Port Combo-Non-Design					18.13										
	2W VG Loop/2W VG Port (Centrex)Port Combo-Non-Design					27.26										
	2W VG Loop/2W VG Port (Centrex) Port Combo-Non-Design					45.91										
UNE Port/Loop Combination Rates (Design)																
	2W VG Loop/2W VG Port (Centrex) Port Combo-Design					16.12										
	2W VG Loop/2W VG Port (Centrex)Port Combo-Design					20.98										
	2W VG Loop/2W VG Port (Centrex)Port Combo-Design					29.78										
	2W VG Loop/2W VG Port (Centrex) Port Combo-Design					47.95										
UNE Loop Rate																
	2W VG Loop (SL 1)-Zone 1		1	UEP91	UECS1	10.98										
	2W VG Loop (SL 1)-Zone 2		2	UEP91	UECS1	15.91										
	2W VG Loop (SL 1)-Zone 3		3	UEP91	UECS1	25.04										
	2W VG Loop (SL 1)-Zone 4		4	UEP91	UECS1	43.68										
	2W VG Loop (SL 2)-Zone 1		1	UEP91	UECS2	13.89										
	2W VG Loop (SL 2)-Zone 2		2	UEP91	UECS2	18.75										
	2W VG Loop (SL 2)-Zone 3		3	UEP91	UECS2	27.55										
	2W VG Loop (SL 2)-Zone 4		4	UEP91	UECS2	45.72										
UNE Ports																
All States (Except North Carolina and Sout Carolina)																
	2W VG Port (Centrex) Basic Local Area			UEP91	UEPYA	2.23	40.31	19.84	24.90	6.58						
	2W VG Port (Centrex 800 termination)Basic Local Area			UEP91	UEPYB	2.23	40.31	19.84	24.90	6.58						
	2W VG Port (Centrex with Caller ID)Note1 Basic Local Area			UEP91	UEPYH	2.23	40.31	19.84	24.90	6.58						
	2W VG Port (Centrex from diff SWC) Note 2, 3 Basic Local Area			UEP91	UEPYM	2.23	108.35	70.57	54.24	11.70						
	2W VG Port, Diff SWC-800 Service Term-Basic Local Area			UEP91	UEPYZ	2.23	108.35	70.57	54.24	11.70						
	2W VG Port terminated in on Megalink or equivalent-Basic Local Area			UEP91	UEPY9	2.23	40.31	19.84	24.90	6.58						
	2W VG Port Terminated on 800 Service Term-Basic Local Area			UEP91	UEPY2	2.23	40.31	19.84	24.90	6.58						
AL, KY, LA, MS, & TN Only																
	2W VG Port (Centrex)			UEP91	UEPQA	2.23	40.31	19.84	24.90	6.58						
	2W VG Port (Centrex 800 termination)			UEP91	UEPQB	2.23	40.31	19.84	24.90	6.58						
	2W VG Port (Centrex with Caller ID)1			UEP91	UEPQH	2.23	40.31	19.84	24.90	6.58						
	2W VG Port (Centrex from diff SWC)2,3			UEP91	UEPQM	2.23	108.35	70.57	54.24	11.70						
	2W VG Port, Diff SWC-2,3-800 Service Term			UEP91	UEPQZ	2.23	108.35	70.57	54.24	11.70						
	2W VG Port terminated in on Megalink or equivalent			UEP91	UEPQ9	2.23	40.31	19.84	24.90	6.58						
	2W VG Port Terminated on 800 Service Term			UEP91	UEPQ2	2.23	40.31	19.84	24.90	6.58						
Local Switching																
	Centrex Intercom Funtionality, per port			UEP91	URECS	0.7947										
Features																
	All Standard Features Offered, per port			UEP91	UEPVF	2.56										
	All Select Features Offered, per port			UEP91	UEPVS	0.00	404.98									
	All Centrex Control Features Offered, per port			UEP91	UEPVC	2.56										
NARS																
	Unbundled Network Access Register-Combination			UEP91	UARCX	0.00	0.00	0.00	0.00	0.00						
	Unbundled Network Access Register-Indial			UEP91	UAR1X	0.00	0.00	0.00	0.00	0.00						
	Unbundled Network Access Register-Outdial			UEP91	UAROX	0.00	0.00	0.00	0.00	0.00						
Misc Terminations																
2-Wire Trunk Side																
	Trunk Side Terminations, each			UEP91	CENA6	8.25	120.00	18.85	61.77	3.88						
Interoffice Channel Mileage - 2-Wire																
	Interoffice Channel Facilities Termination-VG			UEP91	M1GBC	22.52	40.77	27.57	17.26	7.11						
	Interoffice Channel mileage, per mile or fraction of mile			UEP91	M1GBM	0.0098										
Feature Activations (DS0) Centrex Loops on Channelized DS1 Service																
D4 Channel Bank Feature Activations																
	Feature Activation on D-4 Channel Bank Centrex Loop Slot			UEP91	1PQWS	0.57										
	Feature Activation on D-4 Channel Bank FX line Side Loop Slot			UEP91	1PQW6	0.57										
	Feature Activation on D-4 Channel Bank FX Trunk Side Loop Slot			UEP91	1PQW7	0.57										

CATEGORY	RATE ELEMENTS	Interim	Zone	BCS	USOC	RATES($)					Svc Order Submitted Elec per LSR	Svc Order Submitted Manually per LSR	Incremental Charge - Manual Svc Order vs. Electronic-1st	Incremental Charge - Manual Svc Order vs. Electronic-Add'l	Incremental Charge - Manual Svc Order vs. Electronic-Disc 1st	Incremental Charge - Manual Svc Order vs. Electronic-Disc Add'l
							Nonrecurring		NRC Disconnect		OSS Rates($)					
						Rec	First	Add'l	First	Add'l	SOMEC	SOMAN	SOMAN	SOMAN	SOMAN	SOMAN
	Feature Activation on D-4 Channel Bank Centrex Loop Slot-Different WC			UEP91	1PQWP	0.57										
	Feature Activation on D-4 Channel Bank Private Line Loop Slot			UEP91	1PQWV	0.57										
	Feature Activation on D-4 Channel Bank Tjie Line/Trunk Loop Slot			UEP91	1PQWQ	0.57										
	Feature Activation on D-4 Channel Bank WATS Loop Slot			UEP91	1PQWA	0.57										
Non-Recurring Charges (NRC) Associated with UNE-P Centrex																
	Conversion-Currently Combined Switch-As-Is with allowed changes, per port			UEP91	USAC2		0.10	0.10								
	Conversion of Existing Centrex Common Block			UEP91	USACN		37.97	16.68								
	New Centrex Standard Common Block			UEP91	M1ACS	0.00	666.32									
	New Centrex Customized Common Block			UEP91	M1ACC	0.00	666.32									
	Secondary Block, per Block			UEP91	M2CC1	0.00	77.91									
	NAR Establishment Charge, Per Occasion			UEP91	URECA	0.00	72.63									
Additional Non-Recurring Charges (NRC)																
	Unbundled Misc Rate Element, Tag Loop at End Use Premise			UEP91	URETL		8.33	0.83								
	Unbundled Misc Rate Element, Tag Design Loop at End Use Premise			UEP91	URETN		11.19	1.10								
UNE-P CENTREX - 5ESS (Valid in All States)																
2-Wire VG Loop/2-Wire Voice Grade Port (Centrex) Combo																
UNE Port/Loop Combination Rates (Non-Design)																
	2W VG Loop/2W VG Port (Centrex) Port Combo-Non-Design					13.22										
	2W VG Loop/2W VG Port (Centrex)Port Combo-Non-Design					18.13										
	2W VG Loop/2W VG Port (Centrex)Port Combo-Non-Design					27.26										
	2W VG Loop/2W VG Port (Centrex) Port Combo-Non-Design					45.91										
UNE Port/Loop Combination Rates (Design)																
	2W VG Loop/2W VG Port (Centrex) Port Combo-Design					16.12										
	2W VG Loop/2W VG Port (Centrex)Port Combo-Design					20.98										
	2W VG Loop/2W VG Port (Centrex)Port Combo-Design					29.78										
	2W VG Loop/2W VG Port (Centrex) Port Combo-Design					47.95										
UNE Loop Rate																
	2W VG Loop (SL 1)-Zone 1		1	UEP95	UECS1	10.98										
	2W VG Loop (SL 1)-Zone 2		2	UEP95	UECS1	15.91										
	2W VG Loop (SL 1)-Zone 3		3	UEP95	UECS1	25.04										
	2W VG Loop (SL 1)-Zone 4		4	UEP95	UECS1	43.68										
	2W VG Loop (SL 2)-Zone 1		1	UEP95	UECS2	13.89										
	2W VG Loop (SL 2)-Zone 2		2	UEP95	UECS2	18.75										
	2W VG Loop (SL 2)-Zone 3		3	UEP95	UECS2	27.55										
	2W VG Loop (SL 2)-Zone 4		4	UEP95	UECS2	45.72										
UNE Port Rate																
All States																
	2W VG Port (Centrex) Basic Local Area			UEP95	UEPYA	2.23	40.31	19.84	24.90	6.58						
	2W VG Port (Centrex 800 termination)			UEP95	UEPYB	2.23	40.31	19.84	24.90	6.58						
	2W VG Port (Centrex with Caller ID)1Basic Local Area			UEP95	UEPYH	2.23	40.31	19.84	24.90	6.58						
	2W VG Port (Centrex from diff SWC)2,3 Basic Local Area			UEP95	UEPYM	2.23	108.35	70.57	54.24	11.70						
	2W VG Port, Diff SWC 2,3-800 Service Term-Basic Local Area			UEP95	UEPYZ	2.23	108.35	70.57	54.24	11.70						
	2W VG Port terminated in on Megalink or equivalent-Basic Local Area			UEP95	UEPY9	2.23	40.31	19.84	24.90	6.58						
	2W VG Port Terminated on 800 Service Term-Basic Local Area			UEP95	UEPY2	2.23	40.31	19.84	24.90	6.58						
AL, KY, LA, MS, SC, & TN Only																
	2W VG Port (Centrex)			UEP95	UEPQA	2.23	40.31	19.84	24.90	6.58						
	2W VG Port (Centrex 800 termination)			UEP95	UEPQB	2.23	40.31	19.84	24.90	6.58						
	2W VG Port (Centrex with Caller ID)1			UEP95	UEPQH	2.23	40.31	19.84	24.90	6.58						
	2W VG Port (Centrex from diff SWC)2,3			UEP95	UEPQM	2.23	108.35	70.57	54.24	11.70						
	2W VG Port, Diff SWC-800 Service Term 2,3			UEP95	UEPQZ	2.23	108.35	70.57	54.24	11.70						
	2W VG Port terminated in on Megalink or equivalent			UEP95	UEPQ9	2.23	40.31	19.84	24.90	6.58						
	2W VG Port Terminated on 800 Service Term			UEP95	UEPQ2	2.23	40.31	19.84	24.90	6.58						
FL & GA Only																
Local Switching																
	Centrex Intercom Funtionality, per port			UEP95	URECS	0.7947										

UNBUNDLED NETWORK ELEMENTS - Mississippi														Attachment: 2 Exh A			
CATEGORY	RATE ELEMENTS	Interim	Zone	BCS	USOC	RATES($)					Svc Order Submitted Elec per LSR	Svc Order Submitted Manually per LSR	Incremental Charge - Manual Svc Order vs. Electronic-1st	Incremental Charge - Manual Svc Order vs. Electronic-Add'l	Incremental Charge - Manual Svc Order vs. Electronic-Disc 1st	Incremental Charge - Manual Svc Order vs. Electronic-Disc Add'l
							Nonrecurring		NRC Disconnect		OSS Rates($)					
						Rec	First	Add'l	First	Add'l	SOMEC	SOMAN	SOMAN	SOMAN	SOMAN	SOMAN
Features																
	All Standard Features Offered, per port			UEP95	UEPVF	2.56										
	All Select Features Offered, per port			UEP95	UEPVS	0.00	404.98									
	All Centrex Control Features Offered, per port			UEP95	UEPVC	2.56										
NARS																
	Unbundled Network Access Register-Combination			UEP95	UARCX	0.00	0.00	0.00	0.00	0.00						
	Unbundled Network Access Register-Indial			UEP95	UAR1X	0.00	0.00	0.00	0.00	0.00						
	Unbundled Network Access Register-Outdial			UEP95	UAROX	0.00	0.00	0.00	0.00	0.00						
Misc Terminations																
2-Wire Trunk Side																
	Trunk Side Terminations, each			UEP95	CEND6	8.25	120.00	18.85	61.77	3.88						
4-Wire Digital (1.544 Megabits)																
	DS1 Circuit Terminations, each			UEP95	M1HD1	58.41	203.19	96.25	74.86	2.54						
	DS0 Channels Activated, each			UEP95	M1HDO	0.00	14.56									
Interoffice Channel Mileage - 2-Wire																
	Interoffice Channel Facilities Termination			UEP95	M1GBC	22.52	40.77	27.57	17.26	7.11						
	Interoffice Channel mileage, per mile or fraction of mile			UEP95	M1GBM	0.0098										
Feature Activations (DS0) Centrex Loops on Channelized DS1 Service																
D4 Channel Bank Feature Activations																
	Feature Activation on D-4 Channel Bank Centrex Loop Slot			UEP95	1PQWS	0.57										
	Feature Activation on D-4 Channel Bank FX line Side Loop Slot			UEP95	1PQW6	0.57										
	Feature Activation on D-4 Channel Bank FX Trunk Side Loop Slot			UEP95	1PQW7	0.57										
	Feature Activation on D-4 Channel Bank Centrex Loop Slot-Different WC			UEP95	1PQWP	0.57										
	Feature Activation on D-4 Channel Bank Private Line Loop Slot			UEP95	1PQWV	0.57										
	Feature Activation on D-4 Channel Bank Tjie Line/Trunk Loop Slot			UEP95	1PQWQ	0.57										
	Feature Activation on D-4 Channel Bank WATS Loop Slot			UEP95	1PQWA	0.57										
Non-Recurring Charges (NRC) Associated with UNE-P Centrex																
	NRC Conversion Currently Combined Switch-As-Is with allowed changes, per port			UEP95	USAC2		0.10	0.10								
	Conversion of Existing Centrex Common Block, each			UEP95	USACN		37.97	16.68								
	New Centrex Standard Common Block			UEP95	M1ACS	0.00	666.32									
	New Centrex Customized Common Block			UEP95	M1ACC	0.00	666.32									
	NAR Establishment Charge, Per Occasion			UEP95	URECA	0.00	72.63									
Additional Non-Recurring Charges (NRC)																
	Unbundled Misc Rate Element, Tag Loop at End Use Premise			UEP95	URETL		8.33	0.83								
	Unbundled Misc Rate Element, Tag Design Loop at End Use Premise			UEP95	URETN		11.19	1.10								
UNE-P CENTREX - DMS100 (Valid in All States)																
2-Wire VG Loop/2-Wire Voice Grade Port (Centrex) Combo																
UNE Port/Loop Combination Rates (Non-Design)																
	2W VG Loop/2W VG Port (Centrex) Port Combo-Non-Design					13.22										
	2W VG Loop/2W VG Port (Centrex)Port Combo-Non-Design					18.13										
	2W VG Loop/2W VG Port (Centrex)Port Combo-Non-Design					27.26										
	2W VG Loop/2W VG Port (Centrex) Port Combo-Non-Design					45.91										
UNE Port/Loop Combination Rates (Design)																
	2W VG Loop/2W VG Port (Centrex) Port Combo-Design					16.12										
	2W VG Loop/2W VG Port (Centrex)Port Combo-Design					20.98										
	2W VG Loop/2W VG Port (Centrex)Port Combo-Design					29.78										
	2W VG Loop/2W VG Port (Centrex) Port Combo-Design					47.95										
UNE Loop Rate																
	2W VG Loop (SL 1)-Zone 1		1	UEP9D	UECS1	10.98										
	2W VG Loop (SL 1)-Zone 2		2	UEP9D	UECS1	15.91										
	2W VG Loop (SL 1)-Zone 3		3	UEP9D	UECS1	25.04										
	2W VG Loop (SL 1)-Zone 4		4	UEP9D	UECS1	43.68										
	2W VG Loop (SL 2)-Zone 1		1	UEP9D	UECS2	13.89										
	2W VG Loop (SL 2)-Zone 2		2	UEP9D	UECS2	18.75										
	2W VG Loop (SL 2)-Zone 3		3	UEP9D	UECS2	27.55										
	2W VG Loop (SL 2)-Zone 4		4	UEP9D	UECS2	45.72										

UNBUNDLED NETWORK ELEMENTS - Mississippi														Attachment: 2 Exh A			
CATEGORY	RATE ELEMENTS	Interim	Zone	BCS	USOC	RATES($)					Svc Order Submitted Elec per LSR	Svc Order Submitted Manually per LSR	Incremental Charge - Manual Svc Order vs. Electronic-1st	Incremental Charge - Manual Svc Order vs. Electronic-Add'l	Incremental Charge - Manual Svc Order vs. Electronic-Disc 1st	Incremental Charge - Manual Svc Order vs. Electronic-Disc Add'l
							Nonrecurring		NRC Disconnect		OSS Rates($)					
						Rec	First	Add'l	First	Add'l	SOMEC	SOMAN	SOMAN	SOMAN	SOMAN	SOMAN
UNE Port Rate																
ALL STATES																
	2W VG Port (Centrex) Basic Local Area			UEP9D	UEPYA	2.23	40.31	19.84	24.90	6.58						
	2W VG Port (Centrex 800 termination)Basic Local Area			UEP9D	UEPYB	2.23	40.31	19.84	24.90	6.58						
	2W VG Port (Centrex/EBS-PSET)3Basic Local Area			UEP9D	UEPYC	2.23	40.31	19.84	24.90	6.58						
	2W VG Port (Centrex /EBS-M5009)3Basic Local Area			UEP9D	UEPYD	2.23	40.31	19.84	24.90	6.58						
	2W VG Port (Centrex /EBS-M5209))3 Basic Local Area			UEP9D	UEPYE	2.23	40.31	19.84	24.90	6.58						
	2W VG Port (Centrex /EBS-M5112))3 Basic Local Area			UEP9D	UEPYF	2.23	40.31	19.84	24.90	6.58						
	2W VG Port (Centrex /EBS-M5312))3Basic Local Area			UEP9D	UEPYG	2.23	40.31	19.84	24.90	6.58						
	2W VG Port (Centrex /EBS-M5008))3 Basic Local Area			UEP9D	UEPYT	2.23	40.31	19.84	24.90	6.58						
	2W VG Port (Centrex/EBS-M5208))3 Basic Local Area			UEP9D	UEPYU	2.23	40.31	19.84	24.90	6.58						
	2W VG Port (Centrex/EBS-M5216))3 Basic Local Area			UEP9D	UEPYV	2.23	40.31	19.84	24.90	6.58						
	2W VG Port (Centrex/EBS-M5316))3 Basic Local Area			UEP9D	UEPY3	2.23	40.31	19.84	24.90	6.58						
	2W VG Port (Centrex with Caller ID) Basic Local Area			UEP9D	UEPYH	2.23	40.31	19.84	24.90	6.58						
	2W VG Port (Centrex/Caller ID/Msg Wtg Lamp Indication))4 Basic Local Area			UEP9D	UEPYW	2.23	40.31	19.84	24.90	6.58						
	2W VG Port (Centrex/Msg Wtg Lamp Indication))4 Basic Local Area			UEP9D	UEPYJ	2.23	40.31	19.84	24.90	6.58						
	2W VG Port (Centrex from diff SWC) 2,3-Basic Local Area			UEP9D	UEPYM	2.23	108.35	70.57	54.24	11.70						
	2W VG Port (Centrex/differ SWC /EBS-PSET)2,3,4 Basic Local Area			UEP9D	UEPYO	2.23	108.35	70.57	54.24	11.70						
	2W VG Port (Centrex/differ SWC /EBS-M5009)2,3,4 Basic Local Area			UEP9D	UEPYP	2.23	108.35	70.57	54.24	11.70						
	2W VG Port (Centrex/differ SWC /EBS-5209)2,3,4 Basic Local Area			UEP9D	UEPYQ	2.23	108.35	70.57	54.24	11.70						
	2W VG Port (Centrex/differ SWC /EBS-M5112)2,3,4 Basic Local Area			UEP9D	UEPYR	2.23	108.35	70.57	54.24	11.70						
	2W VG Port (Centrex/differ SWC /EBS-M5312)2,3,4 Basic Local Area			UEP9D	UEPYS	2.23	108.35	70.57	54.24	11.70						
	2W VG Port (Centrex/differ SWC /EBS-M5008)2,3,4 Basic Local Area			UEP9D	UEPY4	2.23	108.35	70.57	54.24	11.70						
	2W VG Port (Centrex/differ SWC /EBS-M5208)2, 3 Basic Local Area			UEP9D	UEPY5	2.23	108.35	70.57	54.24	11.70						
	2W VG Port (Centrex/differ SWC /EBS-M5216)2,3,4 Basic Local Area			UEP9D	UEPY6	2.23	108.35	70.57	54.24	11.70						
	2W VG Port (Centrex/differ SWC /EBS-M5316)2,3,4 Basic Local Area			UEP9D	UEPY7	2.23	108.35	70.57	54.24	11.70						
	2W VG Port, Diff SWC-800 Service Term 2,3			UEP9D	UEPYZ	2.23	108.35	70.57	54.24	11.70						
	2W VG Port terminated in on Megalink or equivalent Basic Local Area			UEP9D	UEPY9	2.23	40.31	19.84	24.90	6.58						
	2W VG Port Terminated on 800 Service Term Basic Local Area			UEP9D	UEPY2	2.23	40.31	19.84	24.90	6.58						
AL, KY, LA, MS, SC, & TN Only																
	2W VG Port (Centrex)			UEP9D	UEPQA	2.23	40.31	19.84	24.90	6.58						
	2W VG Port (Centrex 800 termination)			UEP9D	UEPQB	2.23	40.31	19.84	24.90	6.58						
	2W VG Port (Centrex/EBS-PSET)4			UEP9D	UEPQC	2.23	40.31	19.84	24.90	6.58						
	2W VG Port (Centrex /EBS-M5009)4			UEP9D	UEPQD	2.23	40.31	19.84	24.90	6.58						
	2W VG Port (Centrex /EBS-M5209)4			UEP9D	UEPQE	2.23	40.31	19.84	24.90	6.58						
	2W VG Port (Centrex /EBS-M5112)4			UEP9D	UEPQF	2.23	40.31	19.84	24.90	6.58						
	2W VG Port (Centrex /EBS-M5312)4			UEP9D	UEPQG	2.23	40.31	19.84	24.90	6.58						
	2W VG Port (Centrex /EBS-M5008)4			UEP9D	UEPQT	2.23	40.31	19.84	24.90	6.58						
	2W VG Port (Centrex/EBS-M5208)4			UEP9D	UEPQU	2.23	40.31	19.84	24.90	6.58						
	2W VG Port (Centrex/EBS-M5216)4			UEP9D	UEPQV	2.23	40.31	19.84	24.90	6.58						
	2W VG Port (Centrex/EBS-M5316)4			UEP9D	UEPQ3	2.23	40.31	19.84	24.90	6.58						
	2W VG Port (Centrex with Caller ID)			UEP9D	UEPQH	2.23	40.31	19.84	24.90	6.58						
	2W VG Port (Centrex/Caller ID/Msg Wtg Lamp Indication)4			UEP9D	UEPQW	2.23	40.31	19.84	24.90	6.58						
	2W VG Port (Centrex/Msg Wtg Lamp Indication)4			UEP9D	UEPQJ	2.23	40.31	19.84	24.90	6.58						
	2W VG Port (Centrex from diff SWC) 2,3			UEP9D	UEPQM	2.23	108.35	70.57	54.24	11.70						
	2W VG Port (Centrex/differ SWC /EBS-PSET)2,3,4			UEP9D	UEPQO	2.23	108.35	70.57	54.24	11.70						
	2W VG Port (Centrex/differ SWC /EBS-M5009)2,3,4			UEP9D	UEPQP	2.23	108.35	70.57	54.24	11.70						
	2W VG Port (Centrex/differ SWC /EBS-5209)2,3,4			UEP9D	UEPQQ	2.23	108.35	70.57	54.24	11.70						
	2W VG Port (Centrex/differ SWC /EBS-M5112)2,3,4			UEP9D	UEPQR	2.23	108.35	70.57	54.24	11.70						
	2W VG Port (Centrex/differ SWC /EBS-M5312)2,3,4			UEP9D	UEPQS	2.23	108.35	70.57	54.24	11.70						
	2W VG Port (Centrex/differ SWC /EBS-M5008)2,3,4			UEP9D	UEPQ4	2.23	108.35	70.57	54.24	11.70						

CATEGORY	RATE ELEMENTS	Interim	Zone	BCS	USOC	RATES($)					Svc Order Submitted Elec per LSR	Svc Order Submitted Manually per LSR	Incremental Charge - Manual Svc Order vs. Electronic-1st	Incremental Charge - Manual Svc Order vs. Electronic-Add'l	Incremental Charge - Manual Svc Order vs. Electronic-Disc 1st	Incremental Charge - Manual Svc Order vs. Electronic-Disc Add'l
							Nonrecurring		NRC Disconnect		OSS Rates($)					
						Rec	First	Add'l	First	Add'l	SOMEC	SOMAN	SOMAN	SOMAN	SOMAN	SOMAN
	2W VG Port (Centrex/differ SWC /EBS-M5208)2,3,4			UEP9D	UEPQ5	2.23	108.35	70.57	54.24	11.70						
	2W VG Port (Centrex/differ SWC /EBS-M5216)2,3,4			UEP9D	UEPQ6	2.23	108.35	70.57	54.24	11.70						
	2W VG Port (Centrex/differ SWC /EBS-M5316)2,3,4			UEP9D	UEPQ7	2.23	108.35	70.57	54.24	11.70						
	2W VG Port, Diff SWC-800 Service Term 2,3			UEP9D	UEPQZ	2.23	108.35	70.57	54.24	11.70						
	2W VG Port terminated in on Megalink or equivalent			UEP9D	UEPQ9	2.23	40.31	19.84	24.90	6.58						
	2W VG Port Terminated on 800 Service Term			UEP9D	UEPQ2	2.23	40.31	19.84	24.90	6.58						
Local Switching																
	Centrex Intercom Funtionality, per port			UEP9D	URECS	0.7947										
Features																
	All Standard Features Offered, per port			UEP9D	UEPVF	2.56										
	All Select Features Offered, per port			UEP9D	UEPVS	0.00	404.98									
	All Centrex Control Features Offered, per port			UEP9D	UEPVC	2.56										
NARS																
	Unbundled Network Access Register-Combination			UEP9D	UARCX	0.00	0.00	0.00	0.00	0.00						
	Unbundled Network Access Register-Inward			UEP9D	UAR1X	0.00	0.00	0.00	0.00	0.00						
	Unbundled Network Access Register-Outdial			UEP9D	UAROX	0.00	0.00	0.00	0.00	0.00						
Misc Terminations																
2-Wire Trunk Side																
	Trunk Side Terminations, each			UEP9D	CEND6	8.25	120.00	18.85	61.77	3.88						
4-Wire Digital (1.544 Megabits)																
	DS1 Circuit Terminations, each			UEP9D	M1HD1	58.41	203.19	96.25	74.86	2.54						
	DS0 Channels Activiated per Channel			UEP9D	M1HDO	0.00	14.56									
Interoffice Channel Mileage - 2-Wire																
	Interoffice Channel Facilities Termination			UEP9D	M1GBC	22.52	40.77	27.57	17.26	7.11						
	Interoffice Channel mileage, per mile or fraction of mile			UEP9D	M1GBM	0.0098										
Feature Activations (DS0) Centrex Loops on Channelized DS1 Service																
D4 Channel Bank Feature Activations																
	Feature Activation on D-4 Channel Bank Centrex Loop Slot			UEP9D	1PQWS	0.57										
	Feature Activation on D-4 Channel Bank FX line Side Loop Slot			UEP9D	1PQW6	0.57										
	Feature Activation on D-4 Channel Bank FX Trunk Side Loop Slot			UEP9D	1PQW7	0.57										
	Feature Activation on D-4 Channel Bank Centrex Loop Slot-Different WC			UEP9D	1PQWP	0.57										
	Feature Activation on D-4 Channel Bank Private Line Loop Slot			UEP9D	1PQWV	0.57										
	Feature Activation on D-4 Channel Bank Tjie Line/Trunk Loop Slot			UEP9D	1PQWQ	0.57										
	Feature Activation on D-4 Channel Bank WATS Loop Slot			UEP9D	1PQWA	0.57										
Non-Recurring Charges (NRC) Associated with UNE-P Centrex																
	NRC Conversion Currently Combined Switch-As-Is with allowed changes, per port			UEP9D	USAC2		0.10	0.10								
	Conversion of existing Centrex Common Block, each			UEP9D	USACN		37.97	16.68								
	New Centrex Standard Common Block			UEP9D	M1ACS	0.00	666.32									
	New Centrex Customized Common Block			UEP9D	M1ACC	0.00	666.32									
	NAR Establishment Charge, Per Occasion			UEP9D	URECA	0.00	72.63									
Additional Non-Recurring Charges (NRC)																
	Unbundled Misc Rate Element, Tag Loop at End Use Premise			UEP9D	URETL		8.33	0.83								
	Unbundled Misc Rate Element, Tag Design Loop at End Use Premise			UEP9D	URETN		11.19	1.10								
UNE-P CENTREX - EWSD (Valid in AL, FL, KY, LA, MS & TN)																
2-Wire VG Loop/2-Wire Voice Grade Port (Centrex) Combo																
UNE Port/Loop Combination Rates (Non-Design)																
	2W VG Loop/2W VG Port (Centrex) Port Combo-Non-Design					13.22										
	2W VG Loop/2W VG Port (Centrex)Port Combo-Non-Design					18.13										
	2W VG Loop/2W VG Port (Centrex)Port Combo-Non-Design					27.26										
	2W VG Loop/2W VG Port (Centrex) Port Combo-Non-Design					45.91										
UNE Port/Loop Combination Rates (Design)																
	2W VG Loop/2W VG Port (Centrex) Port Combo-Design					16.12										
	2W VG Loop/2W VG Port (Centrex)Port Combo-Design					20.98										
	2W VG Loop/2W VG Port (Centrex)Port Combo-Design					29.78										
	2W VG Loop/2W VG Port (Centrex) Port Combo-Design					47.95										
UNE Loop Rate																

UNBUNDLED NETWORK ELEMENTS - Mississippi														Attachment: 2 Exh A			
CATEGORY		RATE ELEMENTS	Interim	Zone	BCS	USOC	RATES($)					Svc Order Submitted Elec per LSR	Svc Order Submitted Manually per LSR	Incremental Charge - Manual Svc Order vs. Electronic-1st	Incremental Charge - Manual Svc Order vs. Electronic-Add'l	Incremental Charge - Manual Svc Order vs. Electronic-Disc 1st	Incremental Charge - Manual Svc Order vs. Electronic-Disc Add'l
								Nonrecurring		NRC Disconnect		OSS Rates($)					
							Rec	First	Add'l	First	Add'l	SOMEC	SOMAN	SOMAN	SOMAN	SOMAN	SOMAN
		2W VG Loop (SL 1)-Zone 1		1	UEP9E	UECS1	10.98										
		2W VG Loop (SL 1)-Zone 2		2	UEP9E	UECS1	15.91										
		2W VG Loop (SL 1)-Zone 3		3	UEP9E	UECS1	25.04										
		2W VG Loop (SL 1)-Zone 4		4	UEP9E	UECS1	43.68										
		2W VG Loop (SL 2)-Zone 1		1	UEP9E	UECS2	13.89										
		2W VG Loop (SL 2)-Zone 2		2	UEP9E	UECS2	18.75										
		2W VG Loop (SL 2)-Zone 3		3	UEP9E	UECS2	27.55										
		2W VG Loop (SL 2)-Zone 4		4	UEP9E	UECS2	45.72										
	UNE Port Rate																
	AL, FL, KY, LA, MS, & TN only																
		2W VG Port (Centrex) Basic Local Area			UEP9E	UEPYA	2.23	40.31	19.84	24.90	6.58						
		2W VG Port (Centrex 800 termination)Basic Local Area			UEP9E	UEPYB	2.23	40.31	19.84	24.90	6.58						
		2W VG Port (Centrex with Caller ID)1Basic Local Area			UEP9E	UEPYH	2.23	40.31	19.84	24.90	6.58						
		2W VG Port (Centrex from diff SWC)2,3 Basic Local Area			UEP9E	UEPYM	2.23	108.35	70.57	54.24	11.70						
		2W VG Port, Diff SWC 2,3-800 Service Term-Basic Local Area			UEP9E	UEPYZ	2.23	108.35	70.57	54.24	11.70						
		2W VG Port terminated in on Megalink or equivalent-Basic Local Area			UEP9E	UEPY9	2.23	40.31	19.84	24.90	6.58						
		2W VG Port Terminated on 800 Service Term-Basic Local Area			UEP9E	UEPY2	2.23	40.31	19.84	24.90	6.58						
	AL, KY, LA, MS, & TN Only																
		2W VG Port (Centrex)			UEP9E	UEPQA	2.23	40.31	19.84	24.90	6.58						
		2W VG Port (Centrex 800 termination)			UEP9E	UEPQB	2.23	40.31	19.84	24.90	6.58						
		2W VG Port (Centrex with Caller ID)1			UEP9E	UEPQH	2.23	40.31	19.84	24.90	6.58						
		2W VG Port (Centrex from diff SWC)2,3			UEP9E	UEPQM	2.23	108.35	70.57	54.24	11.70						
		2W VG Port, Diff SWC 2,3 -800 Service Term			UEP9E	UEPQZ	2.23	108.35	70.57	54.24	11.70						
		2W VG Port terminated in on Megalink or equivalent			UEP9E	UEPQ9	2.23	40.31	19.84	24.90	6.58						
		2W VG Port Terminated on 800 Service Term			UEP9E	UEPQ2	2.23	40.31	19.84	24.90	6.58						
	Local Switching																
		Centrex Intercom Funtionality, per port			UEP9E	URECS	0.7947										
	Features																
		All Standard Features Offered, per port			UEP9E	UEPVF	2.56										
		All Select Features Offered, per port			UEP9E	UEPVS	0.00	404.98									
		All Centrex Control Features Offered, per port			UEP9E	UEPVC	2.56										
	NARS																
		Unbundled Network Access Register-Combination			UEP9E	UARCX	0.00	0.00	0.00	0.00	0.00						
		Unbundled Network Access Register-Indial			UEP9E	UAR1X	0.00	0.00	0.00	0.00	0.00						
		Unbundled Network Access Register-Outdial			UEP9E	UAROX	0.00	0.00	0.00	0.00	0.00						
	Misc Terminations																
	2-Wire Trunk Side																
		Trunk Side Terminations, each			UEP9E	CEND6	8.25	120.00	18.85	61.77	3.88						
	4-Wire Digital (1.544 Megabits)																
		DS1 Circuit Terminations, each			UEP9E	M1HD1	58.41	203.19	96.25	74.86	2.54						
		DS0 Channel Activated Per Channel			UEP9E	M1HDO	0.00	14.56									
	Interoffice Channel Mileage - 2-Wire																
		Interoffice Channel Facilities Termination			UEP9E	M1GBC	22.52	40.77	27.57	17.26	7.11						
		Interoffice Channel mileage, per mile or fraction of mile			UEP9E	M1GBM	0.0098										
	Feature Activations (DS0) Centrex Loops on Channelized DS1 Service																
	D4 Channel Bank Feature Activations																
		Feature Activation on D-4 Channel Bank Centrex Loop Slot			UEP9E	1PQWS	0.57										
		Feature Activation on D-4 Channel Bank FX line Side Loop Slot			UEP9E	1PQW6	0.57										
		Feature Activation on D-4 Channel Bank FX Trunk Side Loop Slot			UEP9E	1PQW7	0.57										
		Feature Activation on D-4 Channel Bank Centrex Loop Slot-Different WC			UEP9E	1PQWP	0.57										
		Feature Activation on D-4 Channel Bank Private Line Loop Slot			UEP9E	1PQWV	0.57										
		Feature Activation on D-4 Channel Bank Tjie Line/Trunk Loop Slot			UEP9E	1PQWQ	0.57										
		Feature Activation on D-4 Channel Bank WATS Loop Slot			UEP9E	1PQWA	0.57										
	Non-Recurring Charges (NRC) Associated with UNE-P Centrex																
		NRC Conversion Currently Combined Switch-As-Is with allowed changes, per port			UEP9E	USAC2		0.10	0.10								
		Conversion of Existing Centrex Common Block, each			UEP9E	USACN		37.97	16.68								

UNBUNDLED NETWORK ELEMENTS - Mississippi														Attachment: 2 Exh A			
CATEGORY		RATE ELEMENTS	Interim	Zone	BCS	USOC	RATES($)					Svc Order Submitted Elec per LSR	Svc Order Submitted Manually per LSR	Incremental Charge - Manual Svc Order vs. Electronic-1st	Incremental Charge - Manual Svc Order vs. Electronic-Add'l	Incremental Charge - Manual Svc Order vs. Electronic-Disc 1st	Incremental Charge - Manual Svc Order vs. Electronic-Disc Add'l
								Nonrecurring		NRC Disconnect		OSS Rates($)					
							Rec	First	Add'l	First	Add'l	SOMEC	SOMAN	SOMAN	SOMAN	SOMAN	SOMAN
		New Centrex Standard Common Block			UEP9E	M1ACS	0.00	666.32									
		New Centrex Customized Common Block			UEP9E	M1ACC	0.00	666.32									
		NAR Establishment Charge, Per Occasion			UEP9E	URECA	0.00	72.63									
	Additional Non-Recurring Charges (NRC)																
		Unbundled Misc Rate Element, Tag Loop at End Use Premise			UEP9E	URETL		8.33	0.83								
		Unbundled Misc Rate Element, Tag Design Loop at End Use Premise			UEP9E	URETN		11.19	1.10								
	UNE-P CENTREX - DCO - Valid in AL, KY, LA, MS, & TN)																
	2-Wire VG Loop/2-Wire Voice Grade Port (Centrex) Combo																
	UNE Port/Loop Combination Rates (Non-Design)																
		2W VG Loop/2W VG Port (Centrex) Port Combo-Non-Design					13.22										
		2W VG Loop/2W VG Port (Centrex)Port Combo-Non-Design					18.13										
		2W VG Loop/2W VG Port (Centrex)Port Combo-Non-Design					27.26										
		2W VG Loop/2W VG Port (Centrex) Port Combo-Non-Design					45.91										
	UNE Port/Loop Combination Rates (Design)																
		2W VG Loop/2W VG Port (Centrex) Port Combo-Design					16.12										
		2W VG Loop/2W VG Port (Centrex)Port Combo-Design					20.98										
		2W VG Loop/2W VG Port (Centrex)Port Combo-Design					29.78										
		2W VG Loop/2W VG Port (Centrex) Port Combo-Design					47.95										
	UNE Loop Rate																
		2W VG Loop (SL 1)-Zone 1		1	UEP93	UECS1	10.98										
		2W VG Loop (SL 1)-Zone 2		2	UEP93	UECS1	15.91										
		2W VG Loop (SL 1)-Zone 3		3	UEP93	UECS1	25.04										
		2W VG Loop (SL 1)-Zone 4		4	UEP93	UECS1	43.68										
		2W VG Loop (SL 2)-Zone 1		1	UEP93	UECS2	13.89										
		2W VG Loop (SL 2)-Zone 2		2	UEP93	UECS2	18.75										
		2W VG Loop (SL 2)-Zone 3		3	UEP93	UECS2	27.55										
		2W VG Loop (SL 2)-Zone 4		4	UEP93	UECS2	45.72										
	UNE Port Rate																
	AL, KY, LA, MS, & TN only																
		2W VG Port (Centrex) Basic Local Area			UEP93	UEPYA	2.23	40.31	19.84	24.90	6.58						
		2W VG Port (Centrex 800 termination)Basic Local Area			UEP93	UEPYB	2.23	40.31	19.84	24.90	6.58						
		2W VG Port (Centrex with Caller ID)1Basic Local Area			UEP93	UEPYH	2.23	40.31	19.84	24.90	6.58						
		2W VG Port (Centrex from diff SWC)2,3 Basic Local Area			UEP93	UEPYM	2.23	108.35	70.57	54.24	11.70						
		2W VG Port, Diff SWC-2,3-800 Service Term-Basic Local Area			UEP93	UEPYZ	2.23	108.35	70.57	54.24	11.70						
		2W VG Port terminated in on Megalink or equivalent-Basic Local Area			UEP93	UEPY9	2.23	40.31	19.84	24.90	6.58						
		2W VG Port Terminated on 800 Service Term-Basic Local Area			UEP93	UEPY2	2.23	40.31	19.84	24.90	6.58						
		2W VG Port (Centrex)			UEP93	UEPQA	2.23	40.31	19.84	24.90	6.58						
		2W VG Port (Centrex 800 termination)			UEP93	UEPQB	2.23	40.31	19.84	24.90	6.58						
		2W VG Port (Centrex with Caller ID)1			UEP93	UEPQH	2.23	40.31	19.84	24.90	6.58						
		2W VG Port (Centrex from diff SWC)2,3			UEP93	UEPQM	2.23	108.35	70.57	54.24	11.70						
		2W VG Port, Diff SWC-2,3 -800 Service Term			UEP93	UEPQZ	2.23	108.35	70.57	54.24	11.70						
		2W VG Port terminated in on Megalink or equivalent			UEP93	UEPQ9	2.23	40.31	19.84	24.90	6.58						
		2W VG Port Terminated on 800 Service Term			UEP93	UEPQ2	2.23	40.31	19.84	24.90	6.58						
	Local Switching																
		Centrex Intercom Funtionality, per port			UEP93	URECS	0.7947										
	Features																
		All Standard Features Offered, per port			UEP93	UEPVF	2.56										
		All Centrex Control Features Offered, per port			UEP93	UEPVC	2.56										
	NARS																
		Unbundled Network Access Register-Combination			UEP93	UARCX	0.00	0.00	0.00	0.00	0.00						
		Unbundled Network Access Register-Indial			UEP93	UAR1X	0.00	0.00	0.00	0.00	0.00						
		Unbundled Network Access Register-Outdial			UEP93	UAROX	0.00	0.00	0.00	0.00	0.00						
	Misc Terminations																
	2-Wire Trunk Side																
		Trunk Side Terminations, each			UEP93	CEND6	8.25	120.00	18.85	61.77	3.88						
	4-Wire Digital (1.544 Megabits)																
		DS1 Circuit Terminations, each			UEP93	M1HD1	58.41	203.19	96.25	74.86	2.54						

UNBUNDLED NETWORK ELEMENTS - Mississippi														Attachment: 2 Exh A			
CATEGORY	RATE ELEMENTS	Interim	Zone	BCS	USOC	RATES($)					Svc Order Submitted Elec per LSR	Svc Order Submitted Manually per LSR	Incremental Charge - Manual Svc Order vs. Electronic-1st	Incremental Charge - Manual Svc Order vs. Electronic-Add'l	Incremental Charge - Manual Svc Order vs. Electronic-Disc 1st	Incremental Charge - Manual Svc Order vs. Electronic-Disc Add'l
							Nonrecurring		NRC Disconnect		OSS Rates($)					
						Rec	First	Add'l	First	Add'l	SOMEC	SOMAN	SOMAN	SOMAN	SOMAN	SOMAN
	DS0 Channels Activated, Per Channel			UEP93	M1HDO	0.00	14.56									
Interoffice Channel Mileage - 2-Wire																
	Interoffice Channel Facilities Termination			UEP93	M1GBC	22.52	40.77	27.57	17.26	7.11						
	Interoffice Channel mileage, per mile or fraction of mile			UEP93	M1GBM	0.0098										
Feature Activations (DS0) Centrex Loops on Channelized DS1 Service																
D4 Channel Bank Feature Activations																
	Feature Activation on D-4 Channel Bank Centrex Loop Slot			UEP93	1PQWS	0.57										
	Feature Activation on D-4 Channel Bank FX Line Side Loop Slot			UEP93	1PQW6	0.57										
	Feature Activation on D-4 Channel Bank FX Trunk Side Loop Slot			UEP93	1PQW7	0.57										
	Feature Activation on D-4 Channel Bank Centrex Loop Slot-Different WC			UEP93	1PQWP	0.57										
	Feature Activation on D-4 Channel Bank Private Line Loop Slot			UEP93	1PQWV	0.57										
	Feature Activation on D-4 Channel Bank Tie Line/Trunk Loop Slot			UEP93	1PQWQ	0.57										
	Feature Activation on D-4 Channel Bank WATS Loop Slot			UEP93	1PQWA	0.57										
Non-Recurring Charges (NRC) Associated with UNE-P Centrex																
	NRC Conversion Currently Combined Switch-As-Is with allowed changes, per port			UEP93	USAC2		0.10	0.10								
	Conversion of Existing Centrex Common Block, each			UEP93	USACN		37.97	16.68								
	New Centrex Standard Common Block			UEP93	M1ACS	0.00	666.32									
	New Centrex Customized Common Block			UEP93	M1ACC	0.00	666.32									
	NAR Establishment Charge, Per Occasion			UEP93	URECA	0.00	72.63									
Additional Non-Recurring Charges (NRC)																
	Unbundled Misc Rate Element, Tag Loop at End Use Premise			UEP93	URETL		8.33	0.83								
	Unbundled Misc Rate Element, Tag Design Loop at End Use Premise			UEP93	URETN		11.19	1.10								
Note 1 - Required Port for Centrex Control in 1AESS, 5ESS & EWSD																
Note 2 - Requres Interoffice Channel Mileage																
Note 3 - Installation is combination of Installation charge for SL2 Loop and Port																
Note 4 - Requires Specific Customer Premises Equipment																
Note: Rates displaying an "I" in Interim column are interim as a result of a Commission order.																

UNBUNDLED NETWORK ELEMENTS - North Carolina														Attachment: 2 Exh A			
CATEGORY	RATE ELEMENTS	Interim	Zone	BCS	USOC	RATES($)					Svc Order Submitted Elec per LSR	Svc Order Submitted Manually per LSR	Incremental Charge - Manual Svc Order vs. Electronic-1st	Incremental Charge - Manual Svc Order vs. Electronic-Add'l	Incremental Charge - Manual Svc Order vs. Electronic-Disc 1st	Incremental Charge - Manual Svc Order vs. Electronic-Disc Add'l
							Nonrecurring		NRC Disconnect		OSS Rates($)					
						Rec	First	Add'l	First	Add'l	SOMEC	SOMAN	SOMAN	SOMAN	SOMAN	SOMAN
	The "Zone" shown in the sections for stand-alone loops or loops as part of a combination refers to Geographically Deaveraged UNE Zones. To view Geographically Deaveraged UNE Zone Designations by Central Office, refer to internet Website: http://www.interconnection.bellsouth.com/become_a_clec/html/interconnection.htm															
OPERATIONS SUPPORT SYSTEMS (OSS) - "REGIONAL RATES"																
	NOTE: (1) CLEC should contact its contract negotiator if it prefers the "state specific" OSS charges as ordered by the State Commissions. The OSS charges currently contained in this rate exhibit are the BellSouth "regional" service ordering charges. CLEC may elect either the state specific Commission ordered rates for the service ordering charges, or CLEC may elect the regional service ordering charge, however, CLEC can not obtain a mixture of the two regardless if CLEC has a interconnection															
	NOTE: (2) Any element that can be ordered electronically will be billed according to the SOMEC rate listed in this category. Please refer to BellSouth's Local Ordering Handbook (LOH) to determine if a product can be ordered electronically. For those elements that cannot be ordered electronically at present per the LOH, the listed SOMEC rate in this category reflects the charge that would be billed to a CLEC once electronic ordering capabilities come on-line for that element. Otherwise, the manual															
	OSS-Electronic Service Order Charge, Per Local Service Request (LSR)-UNE Only				SOMEC		3.50	0.00	3.50	0.00						
	OSS-Manual Service Order Charge, Per Local Service Request (LSR)-UNE Only				SOMAN		15.20	0.00	15.20	0.00						
UNE SERVICE DATE ADVANCEMENT CHARGE																
	NOTE: The Expedite charge will be maintained commensurate with BellSouth's FCC No.1 Tariff, Section 5 as applicable.															
	UNE Expedite Charge per Circuit or Line Assignable USOC, per Day			UAL, UEANL, UCL, UEF, UDF, UEQ, UDL, UENTW, UDN, UEA, UHL, ULC, USL, U1T12, U1T48, U1TD1, U1TD3, U1TDX, U1TO3, U1TS1, U1TVX, UC1BC, UC1BL, UC1CC, UC1CL, UC1DC, UC1DL, UC1EC, UC1EL, UC1FC, UC1FL, UC1GC, UC1GL, UC1HC, UC1HL, UDL12, UDL48, UDLO3, UDLSX, UE3, ULD12, ULD48, ULDD1, ULDD3, ULDDX, ULDO3, ULDS1, ULDVX, UNC1X, UNC3X, UNCDX, UNCNX, UNCSX, UNCVX, UNLD1, UNLD3, UXTD1, UXTD3, UXTS1, U1TUC, U1TUD, U1TUB, U1TUA,NTCVG, NTCUD, NTCD1	SDASP		200.00									
ORDER MODIFICATION CHARGE																
	Order Modification Charge (OMC)						26.21	0.00	0.00	0.00						
	Order Modification Additional Dispatch Charge (OMCAD)						0.00	0.00	0.00	0.00						
UNBUNDLED EXCHANGE ACCESS LOOP																
	2-WIRE ANALOG VOICE GRADE LOOP															
	2W Analog VG Loop- SL2 w/Loop or Ground Start Signaling-Zone 1		1	UEA	UEAL2	11.96	102.10	65.72								
	2W Analog VG Loop- SL2 w/Loop or Ground Start Signaling-Zone 2		2	UEA	UEAL2	17.36	102.10	65.72								
	2W Analog VG Loop- SL2 w/Loop or Ground Start Signaling-Zone 3		3	UEA	UEAL2	25.23	102.10	65.72								
	2W Analog VG Loop- SL2 w/Reverse Battery Signaling-Zone 1		1	UEA	UEAR2	11.96	102.10	65.72								
	2W Analog VG Loop- SL2 w/Reverse Battery Signaling-Zone 2		2	UEA	UEAR2	17.36	102.10	65.72								
	2W Analog VG Loop- SL2 w/Reverse Battery Signaling-Zone 3		3	UEA	UEAR2	25.23	102.10	65.72								
	Switch-As-Is Conversion rate per UNE Loop, Single LSR, (per DS0)			UEA	URESL		25.03	3.53								
	Switch-As-Is Conversion rate per UNE Loop, Spreadsheet, (per DS0)			UEA	URESP		26.52	5.02								
	CLEC to CLEC Conversion Charge w/o outside dispatch			UEA	UREWO		87.49	36.26								

CATEGORY	RATE ELEMENTS	Interim	Zone	BCS	USOC	RATES($)					Svc Order Submitted Elec per LSR	Svc Order Submitted Manually per LSR	Incremental Charge - Manual Svc Order vs. Electronic-1st	Incremental Charge - Manual Svc Order vs. Electronic-Add'l	Incremental Charge - Manual Svc Order vs. Electronic-Disc 1st	Incremental Charge - Manual Svc Order vs. Electronic-Disc Add'l
							Nonrecurring		NRC Disconnect		OSS Rates($)					
						Rec	First	Add'l	First	Add'l	SOMEC	SOMAN	SOMAN	SOMAN	SOMAN	SOMAN
	Loop Tagging-SL2 (SL2)			UEA	URETL		11.20	1.10								
4-WIRE ANALOG VOICE GRADE LOOP																
	4W Analog VG Loop-Zone 1		1	UEA	UEAL4	19.52	127.40	91.02								
	4W Analog VG Loop-Zone 2		2	UEA	UEAL4	24.74	127.40	91.02								
	4W Analog VG Loop-Zone 3		3	UEA	UEAL4	46.11	127.40	91.02								
	Switch-As-Is Conversion rate per UNE Loop, Single LSR, (per DS0)			UEA	URESL		25.03	3.53								
	Switch-As-Is Conversion rate per UNE Loop, Spreadsheet, (per DS0)			UEA	URESP		26.52	5.02								
	CLEC to CLEC Conversion Charge w/o outside dispatch			UEA	UREWO		87.49	36.26								
2-WIRE ISDN DIGITAL GRADE LOOP																
	2W ISDN Digital Grade Loop-Zone 1		1	UDN	U1L2X	19.78	113.34	76.96								
	2W ISDN Digital Grade Loop-Zone 2		2	UDN	U1L2X	26.16	113.34	76.96								
	2W ISDN Digital Grade Loop-Zone 3		3	UDN	U1L2X	35.37	113.34	76.96								
	CLEC to CLEC Conversion Charge w/o outside dispatch			UDN	UREWO		91.39	44.04								
2-WIRE ASYMMETRICAL DIGITAL SUBSCRIBER LINE (ADSL) COMPATIBLE LOOP																
	2W Unbundled ADSL Loop including manual service inquiry & facility reservation-Zone 1		1	UAL	UAL2X	10.14	117.08	68.36								
	2W Unbundled ADSL Loop including manual service inquiry & facility reservation-Zone 2		2	UAL	UAL2X	11.59	117.08	68.36								
	2W Unbundled ADSL Loop including manual service inquiry & facility reservation-Zone 3		3	UAL	UAL2X	12.28	117.08	68.36								
	2W Unbundled ADSL Loop w/o manual service inquiry & facility reservaton-Zone 1		1	UAL	UAL2W	10.14	92.83	56.02								
	2W Unbundled ADSL Loop w/o manual service inquiry & facility reservaton-Zone 2		2	UAL	UAL2W	11.59	92.83	56.02								
	2W Unbundled ADSL Loop w/o manual service inquiry & facility reservaton-Zone 3		3	UAL	UAL2W	12.28	92.83	56.02								
	CLEC to CLEC Conversion Charge w/o outside dispatch			UAL	UREWO		78.06	32.38								
2-WIRE HIGH BIT RATE DIGITAL SUBSCRIBER LINE (HDSL) COMPATIBLE LOOP																
	2W Unbundled HDSL Loop including manual service inquiry & facility reservation-Zone 1		1	UHL	UHL2X	7.95	125.50	76.77								
	2W Unbundled HDSL Loop including manual service inquiry & facility reservation-Zone 2		2	UHL	UHL2X	9.15	125.50	76.77								
	2W Unbundled HDSL Loop including manual service inquiry & facility reservation-Zone 3		3	UHL	UHL2X	9.53	125.50	76.77								
	2W Unbundled HDSL Loop w/o manual service inquiry and facility reservation-Zone 1		1	UHL	UHL2W	7.95	101.24	64.43								
	2W Unbundled HDSL Loop w/o manual service inquiry and facility reservation-Zone 2		2	UHL	UHL2W	9.15	101.24	64.43								
	2W Unbundled HDSL Loop w/o manual service inquiry and facility reservation-Zone 3		3	UHL	UHL2W	9.53	101.24	64.43								
	CLEC to CLEC Conversion Charge w/o outside dispatch			UHL	UREWO		78.00	32.38								
4-WIRE HIGH BIT RATE DIGITAL SUBSCRIBER LINE (HDSL) COMPATIBLE LOOP																
	4 Wire Unbundled HDSL Loop including manual service inquiry and facility reservation-Zone 1		1	UHL	UHL4X	11.01	153.26	104.54								
	4W Unbundled HDSL Loop including manual service inquiry and facility reservation-Zone 2		2	UHL	UHL4X	12.20	153.26	104.54								
	4W Unbundled HDSL Loop including manual service inquiry and facility reservation-Zone 3		3	UHL	UHL4X	13.49	153.26	104.54								
	4W Unbundled HDSL Loop w/o manual service inquiry and facility reservation-Zone 1		1	UHL	UHL4W	11.01	129.00	92.20								
	4W Unbundled HDSL Loop w/o manual service inquiry and facility reservation-Zone 2		2	UHL	UHL4W	12.20	129.00	92.20								
	4W Unbundled HDSL Loop w/o manual service inquiry and facility reservation-Zone 3		3	UHL	UHL4W	13.49	129.00	92.20								
	CLEC to CLEC Conversion Charge w/o outside dispatch			UHL	UREWO		78.00	32.38								
4-WIRE DS1 DIGITAL LOOP																
	4W DS1 Digital Loop-Zone 1		1	USL	USLXX	63.62	245.16	152.98								
	4W DS1 Digital Loop-Zone 2		2	USL	USLXX	104.40	245.16	152.98								
	4W DS1 Digital Loop-Zone 3		3	USL	USLXX	210.22	245.16	152.98								

CATEGORY	RATE ELEMENTS	Interim	Zone	BCS	USOC	RATES($)					Svc Order Submitted Elec per LSR	Svc Order Submitted Manually per LSR	Incremental Charge - Manual Svc Order vs. Electronic-1st	Incremental Charge - Manual Svc Order vs. Electronic-Add'l	Incremental Charge - Manual Svc Order vs. Electronic-Disc 1st	Incremental Charge - Manual Svc Order vs. Electronic-Disc Add'l
							Nonrecurring		NRC Disconnect		OSS Rates($)					
						Rec	First	Add'l	First	Add'l	SOMEC	SOMAN	SOMAN	SOMAN	SOMAN	SOMAN
	Switch-As-Is Conversion rate per UNE Loop, Single LSR, (per DS1)			USL	URESL		25.03	3.53								
	Switch-As-Is Conversion rate per UNE Loop, Spreadsheet, (per DS1)			USL	URESP		26.52	5.02								
	CLEC to CLEC Conversion Charge w/o outside dispatch			USL	UREWO		100.82	42.93								
4-WIRE 19.2, 56 OR 64 KBPS DIGITAL GRADE LOOP																
	4 Wire Unbundled Digital Loop 2.4 Kbps-Zone 1		1	UDL	UDL2X	21.98	121.86	85.48								
	4 Wire Unbundled Digital Loop 2.4 Kbps-Zone 2		2	UDL	UDL2X	27.58	121.86	85.48								
	4 Wire Unbundled Digital Loop 2.4 Kbps-Zone3		3	UDL	UDL2X	43.08	121.86	85.48								
	4 Wire Unbundled Digital Loop 4.8 Kbps -Zone 1		1	UDL	UDL4X	21.98	121.86	85.48								
	4 Wire Unbundled Digital Loop 4.8 Kbps-Zone 2		2	UDL	UDL4X	27.58	121.86	85.48								
	4 Wire Unbundled Digital Loop 4.8 Kbps-Zone 3		3	UDL	UDL4X	43.08	121.86	85.48								
	4 Wire Unbundled Digital Loop 9.6 Kbps-Zone 1		1	UDL	UDL9X	21.98	121.86	85.48								
	5 Wire Unbundled Digital Loop 9.6 Kbps-Zone 2		2	UDL	UDL9X	27.58	121.86	85.48								
	6 Wire Unbundled Digital Loop 9.6 Kbps-Zone 3		3	UDL	UDL9X	43.08	121.86	85.48								
	4 Wire Unbundled Digital 19.2 Kbps-Zone 1		1	UDL	UDL19	21.98	121.86	85.48								
	4 Wire Unbundled Digital 19.2 Kbps-Zone 2		2	UDL	UDL19	27.58	121.86	85.48								
	4 Wire Unbundled Digital 19.2 Kbps-Zone 3		3	UDL	UDL19	43.08	121.86	85.48								
	4 Wire Unbundled Digital Loop 56 Kbps-Zone 1		1	UDL	UDL56	21.98	121.86	85.48								
	4 Wire Unbundled Digital Loop 56 Kbps-Zone 2		2	UDL	UDL56	27.58	121.86	85.48								
	4 Wire Unbundled Digital Loop 56 Kbps-Zone 3		3	UDL	UDL56	43.08	121.86	85.48								
	4 Wire Unbundled Digital Loop 64 Kbps-Zone 1		1	UDL	UDL64	21.98	121.86	85.48								
	4 Wire Unbundled Digital Loop 64 Kbps-Zone 2		2	UDL	UDL64	27.58	121.86	85.48								
	4 Wire Unbundled Digital Loop 64 Kbps-Zone 3		3	UDL	UDL64	43.08	121.86	85.48								
	Switch-As-Is Conversion rate per UNE Loop, Single LSR, (per DS0)			UDL	URESL		25.03	3.53								
	Switch-As-Is Conversion rate per UNE Loop, Spreadsheet, (per DS0)			UDL	URESP		26.52	5.02								
	CLEC to CLEC Conversion Charge w/o outside dispatch			UDL	UREWO		101.86	49.62								
2-WIRE Unbundled COPPER LOOP																
	2W Unbundled Copper Loop-Designed including manual service inquiry & facility reservation-Zone 1		1	UCL	UCLPB	10.14	116.18	67.46								
	2W Unbundled Copper Loop-Designed including manual service inquiry & facility reservation-Zone 2		2	UCL	UCLPB	11.59	116.18	67.46								
	2W Unbundled Copper Loop-Designed including manual service inquiry & facility reservation-Zone 3		3	UCL	UCLPB	12.28	116.18	67.46								
	2W Unbundled Copper Loop-Designed w/o manual service inquiry and facility reservation-Zone 1		1	UCL	UCLPW	10.14	91.92	55.12								
	2W Unbundled Copper Loop-Designed w/o manual service inquiry and facility reservation-Zone 2		2	UCL	UCLPW	11.59	91.92	55.12								
	2W Unbundled Copper Loop-Designed w/o manual service inquiry and facility reservation-Zone 3		3	UCL	UCLPW	12.28	91.92	55.12								
	Order Coordination for Unbundled Copper Loops (per loop)			UCL	UCLMC		61.38	61.38								
	CLEC to CLEC Conversion Charge w/o outside dispatch (UCL-Des)			UCL	UREWO		89.06	34.45								
4-WIRE COPPER LOOP																
	4W Copper Loop including manual service inquiry and facility reservation-Zone 1		1	UCL	UCL4S	13.10	139.69	90.96								
	4W Copper Loop including manual service inquiry and facility reservation-Zone 2		2	UCL	UCL4S	15.17	139.69	90.96								
	4W Copper Loop including manual service inquiry and facility reservation-Zone 3		3	UCL	UCL4S	17.03	139.69	90.96								
	4W Copper Loop w/o manual service inquiry and facility reservation-Zone 1		1	UCL	UCL4W	13.10	115.43	78.63								
	4W Copper Loop w/o manual service inquiry and facility reservation-Zone 2		2	UCL	UCL4W	15.17	115.43	78.63								
	4W Copper Loop w/o manual service inquiry and facility reservation-Zone 3		3	UCL	UCL4W	17.03	115.43	78.63								
	Order Coordination for Unbundled Copper Loops (per loop)			UCL	UCLMC		61.38	61.38								
	CLEC to CLEC Conversion Charge w/o outside dispatch (UCL-Des)			UCL	UREWO		89.06	34.45								
	Order Coordination for Specified Conversion Time (per LSR)			UEA, UDN, UAL, UHL, UDL, USL	OCOSL		17.56									
Rearrangements																
	EEL to UNE-L Retermination, per 2W Unbundled Voice Loop-SL2			UEA	UREEL		87.49	36.26								

UNBUNDLED NETWORK ELEMENTS - North Carolina														Attachment: 2 Exh A			
CATEGORY		RATE ELEMENTS	Interim	Zone	BCS	USOC	RATES($)					Svc Order Submitted Elec per LSR	Svc Order Submitted Manually per LSR	Incremental Charge - Manual Svc Order vs. Electronic-1st	Incremental Charge - Manual Svc Order vs. Electronic-Add'l	Incremental Charge - Manual Svc Order vs. Electronic-Disc 1st	Incremental Charge - Manual Svc Order vs. Electronic-Disc Add'l
								Nonrecurring		NRC Disconnect		OSS Rates($)					
							Rec	First	Add'l	First	Add'l	SOMEC	SOMAN	SOMAN	SOMAN	SOMAN	SOMAN
		EEL to UNE-L Retermination, per 4 Wire Unbundled Voice Loop			UEA	UREEL		87.49	36.26								
		EEL to UNE-L Retermination, per 2W ISDN Loop			UDN	UREEL		91.39	44.04								
		EEL to UNE-L Retermination, per 4 Wire Unbundled Digital Loop			UDL	UREEL		101.86	49.62								
		EEL to UNE-L Retermination, per 4 Wire Unbundled DS1 Loop			USL	UREEL		100.82	42.93								
UNE LOOP COMMINGLING																	
	2-WIRE ANALOG VOICE GRADE LOOP - COMMINGLING																
		2W Analog VG Loop- SL2 w/Loop or Ground Start Signaling-Zone 1		1	NTCVG	UEAL2	11.96	102.10	65.72								
		2W Analog VG Loop- SL2 w/Loop or Ground Start Signaling-Zone 2		2	NTCVG	UEAL2	17.36	102.10	65.72								
		2W Analog VG Loop- SL2 w/Loop or Ground Start Signaling-Zone 3		3	NTCVG	UEAL2	25.23	102.10	65.72								
		2W Analog VG Loop- SL2 w/Reverse Battery Signaling-Zone 1		1	NTCVG	UEAR2	11.96	102.10	65.72								
		2W Analog VG Loop- SL2 w/Reverse Battery Signaling-Zone 2		2	NTCVG	UEAR2	17.36	102.10	65.72								
		2W Analog VG Loop- SL2 w/Reverse Battery Signaling-Zone 3		3	NTCVG	UEAR2	25.23	102.10	65.72								
		Switch-As-Is Conversion rate per UNE Loop, Single LSR, (per DS0)			NTCVG	URESL		25.03	3.53								
		Switch-As-Is Conversion rate per UNE Loop, Spreadsheet, (per DS0)			NTCVG	URESP		26.52	5.02								
		CLEC to CLEC Conversion Charge w/o outside dispatch			NTCVG	UREWO		87.49	36.26								
		Loop Tagging-SL2 (SL2)			NTCVG	URETL		11.20	1.10								
	4-WIRE ANALOG VOICE GRADE LOOP -COMMINGLING																
		4W Analog VG Loop-Zone 1		1	NTCVG	UEAL4	19.52	127.40	91.02								
		4W Analog VG Loop-Zone 2		2	NTCVG	UEAL4	24.74	127.40	91.02								
		4W Analog VG Loop-Zone 3		3	NTCVG	UEAL4	46.11	127.40	91.02								
		Switch-As-Is Conversion rate per UNE Loop, Single LSR, (per DS0)			NTCVG	URESL		25.03	3.53								
		Switch-As-Is Conversion rate per UNE Loop, Spreadsheet, (per DS0)			NTCVG	URESP		26.52	5.02								
		CLEC to CLEC Conversion Charge w/o outside dispatch			NTCVG	UREWO		87.49	36.26								
	4-WIRE DS1 DIGITAL LOOP																
		4W DS1 Digital Loop-Zone 1		1	NTCD1	USLXX	63.62	245.16	152.98								
		4W DS1 Digital Loop-Zone 2		2	NTCD1	USLXX	104.40	245.16	152.98								
		4W DS1 Digital Loop-Zone 3		3	NTCD1	USLXX	210.22	245.16	152.98								
		Switch-As-Is Conversion rate per UNE Loop, Single LSR, (per DS1)			NTCD1	URESL		25.03	3.53								
		Switch-As-Is Conversion rate per UNE Loop, Spreadsheet, (per DS1)			NTCD1	URESP		26.52	5.02								
		CLEC to CLEC Conversion Charge w/o outside dispatch			NTCD1	UREWO		100.82	42.93								
	4-WIRE 19.2, 56 OR 64 KBPS DIGITAL GRADE LOOP																
		4 Wire Unbundled Digital Loop 2.4 Kbps-Zone 1		1	NTCUD	UDL2X	21.98	121.86	85.48								
		4 Wire Unbundled Digital Loop 2.4 Kbps-Zone 2		2	NTCUD	UDL2X	27.58	121.86	85.48								
		4 Wire Unbundled Digital Loop 2.4 Kbps-Zone3		3	NTCUD	UDL2X	43.08	121.86	85.48								
		4 Wire Unbundled Digital Loop 4.8 Kbps -Zone 1		1	NTCUD	UDL4X	21.98	121.86	85.48								
		4 Wire Unbundled Digital Loop 4.8 Kbps-Zone 2		2	NTCUD	UDL4X	27.58	121.86	85.48								
		4 Wire Unbundled Digital Loop 4.8 Kbps-Zone 3		3	NTCUD	UDL4X	43.08	121.86	85.48								
		4 Wire Unbundled Digital Loop 9.6 Kbps-Zone 1		1	NTCUD	UDL9X	21.98	121.86	85.48								
		5 Wire Unbundled Digital Loop 9.6 Kbps-Zone 2		2	NTCUD	UDL9X	27.58	121.86	85.48								
		6 Wire Unbundled Digital Loop 9.6 Kbps-Zone 3		3	NTCUD	UDL9X	43.08	121.86	85.48								
		4 Wire Unbundled Digital 19.2 Kbps-Zone 1		1	NTCUD	UDL19	21.98	121.86	85.48								
		4 Wire Unbundled Digital 19.2 Kbps-Zone 2		2	NTCUD	UDL19	27.58	121.86	85.48								
		4 Wire Unbundled Digital 19.2 Kbps-Zone 3		3	NTCUD	UDL19	43.08	121.86	85.48								
		4 Wire Unbundled Digital Loop 56 Kbps-Zone 1		1	NTCUD	UDL56	21.98	121.86	85.48								
		4 Wire Unbundled Digital Loop 56 Kbps-Zone 2		2	NTCUD	UDL56	27.58	121.86	85.48								
		4 Wire Unbundled Digital Loop 56 Kbps-Zone 3		3	NTCUD	UDL56	43.08	121.86	85.48								
		4 Wire Unbundled Digital Loop 64 Kbps-Zone 1		1	NTCUD	UDL64	21.98	121.86	85.48								
		4 Wire Unbundled Digital Loop 64 Kbps-Zone 2		2	NTCUD	UDL64	27.58	121.86	85.48								
		4 Wire Unbundled Digital Loop 64 Kbps-Zone 3		3	NTCUD	UDL64	43.08	121.86	85.48								
		Switch-As-Is Conversion rate per UNE Loop, Single LSR, (per DS0)			NTCUD	URESL		25.03	3.53								
		Switch-As-Is Conversion rate per UNE Loop, Spreadsheet, (per DS0)			NTCUD	URESP		26.52	5.02								
		CLEC to CLEC Conversion Charge w/o outside dispatch			NTCUD	UREWO		101.86	49.62								
		Order Coordination for Specified Conversion Time (per LSR)			NTCVG, NTCUD, NTCD1	OCOSL		17.56									
UNBUNDLED EXCHANGE ACCESS LOOP																	
	2-WIRE ANALOG VOICE GRADE LOOP																
		2W Analog VG Loop- Service Level 1- Zone 1		1	UEANL	UEAL2	10.82	36.54	16.87								
		2W Analog VG Loop- Service Level 1- Zone 2		2	UEANL	UEAL2	16.21	36.54	16.87								
		2W Analog VG Loop- Service Level 1- Zone 3		3	UEANL	UEAL2	24.08	36.54	16.87								

UNBUNDLED NETWORK ELEMENTS - North Carolina														Attachment: 2 Exh A			
CATEGORY		RATE ELEMENTS	Interim	Zone	BCS	USOC	RATES($)					Svc Order Submitted Elec per LSR	Svc Order Submitted Manually per LSR	Incremental Charge - Manual Svc Order vs. Electronic-1st	Incremental Charge - Manual Svc Order vs. Electronic-Add'l	Incremental Charge - Manual Svc Order vs. Electronic-Disc 1st	Incremental Charge - Manual Svc Order vs. Electronic-Disc Add'l
								Nonrecurring		NRC Disconnect		OSS Rates($)					
							Rec	First	Add'l	First	Add'l	SOMEC	SOMAN	SOMAN	SOMAN	SOMAN	SOMAN
		2W Analog VG Loop- Service Level 1- Zone 1		1	UEANL	UEASL	10.82	36.54	16.87								
		2W Analog VG Loop- Service Level 1- Zone 2		2	UEANL	UEASL	16.21	36.54	16.87								
		2W Analog VG Loop- Service Level 1- Zone 3		3	UEANL	UEASL	24.08	36.54	16.87								
		Tag Loop at End User Premise			UEANL	URETL		8.93	0.88								
		Loop Testing-Basic 1st Half Hour			UEANL	URET1		33.17	0.00								
		Loop Testing-Basic Additional Half Hour			UEANL	URETA		19.28	19.28								
		Manual Order Coordination for UVL-SL1s (per loop)			UEANL	UEAMC		7.92	7.92								
		Order Coordination for Specified Conversion Time for UVL-SL1 (per LSR)			UEANL	OCOSL		17.56									
		Unbundled Non-Design Voice Loop, billing for BST providing make-up (Engineering Information-E.I.)			UEANL	UEANM		13.04	13.04								
		CLEC to CLEC Conversion Charge w/o Outside Dispatch (UVL-SL1)			UEANL	UREWO		15.74	8.92								
	2-WIRE Unbundled COPPER LOOP																
		2W Unbundled Copper Loop-Non-Designed Zone 1		1	UEQ	UEQ2X	10.93	35.27	15.60								
		2W Unbundled Copper Loop-Non-Designed-Zone 2		2	UEQ	UEQ2X	12.75	35.27	15.60								
		2W Unbundled Copper Loop-Non-Designed-Zone 3		3	UEQ	UEQ2X	13.92	35.27	15.60								
		Tag Loop at End User Premise			UEQ	URETL		8.93	0.88								
		Loop Testing-Basic 1st Half Hour			UEQ	URET1		33.17	0.00								
		Loop Testing-Basic Additional Half Hour			UEQ	URETA		19.28	19.28								
		Manual Order Coordination 2W Unbundled Copper Loop-Non-Designed (per loop)			UEQ	USBMC		7.92	7.92								
		Unbundled Copper Loop-Non-Design, billing for BST providing make-up (Engineering Information-E.I.)			UEQ	UEQMU		13.04	13.04								
		CLEC to CLEC Conversion Charge w/o Outside Dispatch (UCL-ND)			UEQ	UREWO		14.23	7.41								
LOOP MODIFICATION																	
		Unbundled Loop Modification, Removal of Load Coils-2W pair less than or equal to 18k ft, per Unbundled Loop			UAL, UHL, UCL, UEQ, ULS, UEA, UEANL, UEPSR, UEPSB	ULM2L		0.00	0.00								
		Unbundled Loop Modification, Removal of Load Coils-2W greater than 18k ft			UCL, ULS, UEQ	ULM2G		0.00	0.00								
		Unbundled Loop Modification Removal of Load Coils-4 Wire less than or equal to 18K ft, per Unbundled Loop			UHL, UCL, UEA	ULM4L		0.00	0.00								
		Unbundled Loop Modification Removal of Load Coils-4 Wire pair greater than 18k ft			UCL	ULM4G		0.00	0.00								
		Unbundled Loop Modification Removal of Bridged Tap Removal, per unbundled loop			UAL, UHL, UCL, UEQ, ULS, UEA, UEANL, UEPSR, UEPSB	ULMBT		12.15	12.15								
SUB-LOOPS																	
	Sub-Loop Distribution																
		Sub-Loop-Per Cross Box Location-CLEC Feeder Facility Set-Up			UEANL, UEF	USBSA		144.09									
		Sub-Loop-Per Cross Box Location-Per 25 Pair Panel Set-Up			UEANL, UEF	USBSB		10.99	10.99								
		Sub-Loop-Per Building Equipment Room-CLEC Feeder Facility Set-Up			UEANL	USBSC		86.16									
		Sub-Loop-Per Building Equipment Room-Per 25 Pair Panel Set-Up			UEANL	USBSD		27.13	27.13								
		Sub-Loop Distribution Per 2W Analog VG Loop-Zone 1		1	UEANL	USBN2	6.70	63.89	30.06								
		Sub-Loop Distribution Per 2W Analog VG Loop-Zone 2		2	UEANL	USBN2	9.93	63.89	30.06								
		Sub-Loop Distribution Per 2W Analog VG Loop-Zone 3		3	UEANL	USBN2	12.79	63.89	30.06								
		Order Coordination for Unbundled Sub-Loops, per sub-loop pair			UEANL	USBMC		7.92	7.92								
		Sub-Loop Distribution Per 4W Analog VG Loop -Zone 1		1	UEANL	USBN4	10.81	76.75	42.92								
		Sub-Loop Distribution Per 4W Analog VG Loop -Zone 2		2	UEANL	USBN4	14.16	76.75	42.92								
		Sub-Loop Distribution Per 4W Analog VG Loop -Zone 3		3	UEANL	USBN4	24.67	76.75	42.92								
		Order Coordination for Unbundled Sub-Loops, per sub-loop pair			UEANL	USBMC		7.92	7.92								
		Sub-Loop 2W Intrabuilding Network Cable (INC)			UEANL	USBR2	2.34	51.48	17.65								
		Order Coordination for Unbundled Sub-Loops, per sub-loop pair			UEANL	USBMC		7.92	7.92								
		Sub-Loop 4W Intrabuilding Network Cable (INC)			UEANL	USBR4	4.18	57.54	23.71								
		Order Coordination for Unbundled Sub-Loops, per sub-loop pair			UEANL	USBMC		7.92	7.92								
	Service Order charges will apply only once per sub-loop																

UNBUNDLED NETWORK ELEMENTS - North Carolina														Attachment: 2 Exh A			
CATEGORY		RATE ELEMENTS	Interim	Zone	BCS	USOC	RATES($)					Svc Order Submitted Elec per LSR	Svc Order Submitted Manually per LSR	Incremental Charge - Manual Svc Order vs. Electronic-1st	Incremental Charge - Manual Svc Order vs. Electronic-Add'l	Incremental Charge - Manual Svc Order vs. Electronic-Disc 1st	Incremental Charge - Manual Svc Order vs. Electronic-Disc Add'l
								Nonrecurring		NRC Disconnect		OSS Rates($)					
							Rec	First	Add'l	First	Add'l	SOMEC	SOMAN	SOMAN	SOMAN	SOMAN	SOMAN
		Loop Testing-Basic 1st Half Hour			UEANL	URET1		33.17	0.00								
		Loop Testing-Basic Additional Half Hour			UEANL	URETA		19.28	19.28								
		2W Copper Unbundled Sub-Loop Distribution-Zone 1		1	UEF	UCS2X	5.43	63.89	30.06								
		2W Copper Unbundled Sub-Loop Distribution-Zone 2		2	UEF	UCS2X	8.04	63.89	30.06								
		2W Copper Unbundled Sub-Loop Distribution-Zone 3		3	UEF	UCS2X	9.79	63.89	30.06								
		Order Coordination for Unbundled Sub-Loops, per sub-loop pair			UEF	USBMC		7.92	7.92								
		4 Wire Copper Unbundled Sub-Loop Distribution-Zone 1		1	UEF	UCS4X	6.34	76.75	42.92								
		4 Wire Copper Unbundled Sub-Loop Distribution-Zone 2		2	UEF	UCS4X	9.62	76.75	42.92								
		4 Wire Copper Unbundled Sub-Loop Distribution-Zone 3		3	UEF	UCS4X	13.04	76.75	42.92								
		Order Coordination for Unbundled Sub-Loops, per sub-loop pair			UEF	USBMC		7.92	7.92								
		Loop Tagging Service Level 1, Unbundled Copper Loop, Non-Designed and Distribution Subloops			UEF, UEANL	URETL		8.93	0.88								
		Loop Testing-Basic 1st Half Hour			UEF	URET1		33.17	0.00								
		Loop Testing-Basic Additional Half Hour			UEF	URETA		19.28	19.28								
	Unbundled Sub-Loop Modification																
		Unbundled Sub-Loop Modification-2-W Copper Dist Load Coil/Equip Removal per 2-W PR			UEF	ULM2X		0.00	0.00								
		Unbundled Sub-loop Modification-4-W Copper Dist Load Coil/Equip Removal per 4-W PR			UEF	ULM4X		0.00	0.00								
		Unbundled Loop Modification, Removal of Bridge Tap, per unbundled loop			UEF	ULMBT		224.55	4.29								
	Unbundled Network Terminating Wire (UNTW)																
		Unbundled Network Terminating Wire (UNTW) per Pair			UENTW	UENPP	0.51	14.72	14.72								
	Network Interface Device (NID)																
		Network Interface Device (NID)-1-2 lines			UENTW	UND12		86.37	56.69								
		Network Interface Device (NID)-1-6 lines			UENTW	UND16		127.93	98.21								
		Network Interface Device Cross Connect-2 W			UENTW	UNDC2		5.73	5.73								
		Network Interface Device Cross Connect-4W			UENTW	UNDC4		5.73	5.73								
		Network Interface Device (NID)-2W VG					1.01	1.42	1.42								
		Network Interface Device (NID)-4W VG					1.14	1.42	1.42								
		Network Interface Device (NID)-2W ISDN Digital Grade					1.01	1.42	1.42								
		Network Interface Device (NID)-2W ADSL Compatible					1.01	1.42	1.42								
		Network Interface Device (NID)-2W HDSL Compatible					1.01	1.42	1.42								
		Network Interface Device (NID)-4W HDSL Compatible					1.14	1.42	1.42								
		Network Interface Device (NID)-4W 19.2 kbps					1.14	1.42	1.42								
		Network Interface Device (NID)-4W 56 kbps					1.14	1.42	1.42								
		Network Interface Device (NID)-4W 64 kbps					1.14	1.42	1.42								
UNE OTHER, PROVISIONING ONLY - NO RATE																	
		Unbundled Contact Name, Provisioning Only-no rate			UAL, UCL, UDC, UDL, UDN, UEA, UHL, UEANL, UEF, UEQ, UENTW, NTCVG, NTCUD, NTCD1, USL	UNECN	0.00	0.00									
		Unbundled DS1 Loop-Superframe Format Option-no rate			USL, NTCD1	CCOSF	0.00	0.00									
		Unbundled DS1 Loop-Expanded Superframe Format option-no rate			USL, NTCD1	CCOEF	0.00	0.00									
		NID-Dispatch and Service Order for NID installation			UENTW	UNDBX	0.00	0.00									
		UNTW Circuit Establishment, Provisioning Only-No Rate			UENTW	UENCE	0.00	0.00									
LOOP MAKE-UP																	
		Loop Makeup-Preordering w/o Reservation, per working or spare facility queried (Manual).			UMK	UMKLW		23.29	23.29								
		Loop Makeup-Preordering With Reservation, per spare facility queried (Manual).			UMK	UMKLP		24.70	24.70								
		Loop Makeup--With or w/o Reservation, per working or spare facility queried (Mechanized)			UMK	UMKMQ		0.19	0.19								
LINE SPLITTING																	
	END USER ORDERING-CENTRAL OFFICE BASED																

UNBUNDLED NETWORK ELEMENTS - North Carolina														Attachment: 2 Exh A			
CATEGORY		RATE ELEMENTS	Interim	Zone	BCS	USOC	RATES($)					Svc Order Submitted Elec per LSR	Svc Order Submitted Manually per LSR	Incremental Charge - Manual Svc Order vs. Electronic-1st	Incremental Charge - Manual Svc Order vs. Electronic-Add'l	Incremental Charge - Manual Svc Order vs. Electronic-Disc 1st	Incremental Charge - Manual Svc Order vs. Electronic-Disc Add'l
								Nonrecurring		NRC Disconnect		OSS Rates($)					
							Rec	First	Add'l	First	Add'l	SOMEC	SOMAN	SOMAN	SOMAN	SOMAN	SOMAN
		Line Splitting-per line activation DLEC owned splitter			UEPSR UEPSB	UREOS	0.61	15.53	7.79								
		Line Splitting-per line activation BST owned-physical			UEPSR UEPSB	UREBP	0.6409	17.97	10.29								
		Line Splitting-per line activation BST owned-virtual			UEPSR UEPSB	UREBV	0.6325	17.87	10.29								
	UNBUNDLED EXCHANGE ACCESS LOOP																
	2-WIRE ANALOG VOICE GRADE LOOP																
		2W Analog VG Loop-Service Level 1-Line Splitting- Zone 1		1	UEPSR UEPSB	UEALS	10.82	36.54	16.87	0.00	0.00						
		2W Analog VG Loop-Service Level 1-Line Splitting- Zone 1		1	UEPSR UEPSB	UEABS	10.82	36.54	16.87	0.00	0.00						
		2W Analog VG Loop- Service Level 1-Line Splitting-Zone 2		2	UEPSR UEPSB	UEALS	16.21	36.54	16.87	0.00	0.00						
		2W Analog VG Loop- Service Level 1-Line Splitting-Zone 2		2	UEPSR UEPSB	UEABS	16.21	36.54	16.87	0.00	0.00						
		2W Analog VG Loop-Service Level 1-Line Splitting-Zone 3		3	UEPSR UEPSB	UEALS	24.08	36.54	16.87	0.00	0.00						
		2W Analog VG Loop-Service Level 1-Line Splitting-Zone 3		3	UEPSR UEPSB	UEABS	24.08	36.54	16.87	0.00	0.00						
	PHYSICAL COLLOCATION																
		Physical Collocation-2W Cross Connects (Loop) for Line Splitting			UEPSR UEPSB	PE1LS	0.0309	19.77	14.95	0.00	0.00						
	VIRTUAL COLLOCATION																
		Virtual Collocation-2W Cross Connects (Loop) for Line Splitting			UEPSR UEPSB	VE1LS	0.0287	33.96	32.08	0.00	0.00						
UNBUNDLED DEDICATED TRANSPORT																	
	INTEROFFICE CHANNEL - DEDICATED TRANSPORT																
		Interoffice Channel-2W VG-per mile			U1TVX	1L5XX	0.0095										
		Interoffice Channel-2W VG-Facility Termination			U1TVX	U1TV2	12.12	39.36	26.62								
		Interoffice Channel-2W VG Rev Bat.-per mile			U1TVX	1L5XX	0.0095										
		Interoffice Channel-2W VG Rev Bat.-Facility Termination			U1TVX	U1TR2	12.12	39.36	26.62								
		Interoffice Channel-4W VG-per mile			U1TVX	1L5XX	0.0095										
		Interoffice Channel-4- Wire VG-Facility Termination			U1TVX	U1TV4	10.19	39.36	26.62								
		Interoffice Channel-56 kbps-per mile			U1TDX	1L5XX	0.0095										
		Interoffice Channel-56 kbps-Facility Termination			U1TDX	U1TD5	7.47	39.37	26.62								
		Interoffice Channel-64 kbps-per mile			U1TDX	1L5XX	0.0095										
		Interoffice Channel-64 kbps-Facility Termination			U1TDX	U1TD6	7.47	39.37	26.62								
		Interoffice Channel-DS1-per mile			U1TD1	1L5XX	0.1938										
		Interoffice Channel-DS1-Facility Termination			U1TD1	U1TF1	31.06	86.69	79.44								
		Interoffice Channel-DS3-per mile			U1TD3	1L5XX	4.44										
		Interoffice Channel-DS3-Facility Termination			U1TD3	U1TF3	329.91	270.69	158.05								
		Interoffice Channel-STS-1-per mile			U1TS1	1L5XX	4.44										
		Interoffice Channel-STS-1-Facility Termination			U1TS1	U1TFS	339.20	270.69	158.05								
		Local Channel-Dedicated-2W VG-Zone 1		1	ULDVX, UNCVX	ULDV2	12.93										
		Local Channel-Dedicated-2W VG -Zone 2		2	ULDVX, UNCVX	ULDV2	22.90										
		Local Channel-Dedicated-2W VG-Zone 3		3	ULDVX, UNCVX	ULDV2	36.46										
		Local Channel-Dedicated-4W VG -Zone 1		1	ULDVX, UNCVX	ULDV4	13.83										
		Local Channel-Dedicated-4W VG -Zone 2		2	ULDVX, UNCVX	ULDV4	24.53										
		Local Channel-Dedicated-4W VG-Zone 3		3	ULDVX, UNCVX	ULDV4	39.04										
		Local Channel-Dedicated-DS1-Zone 1		1	ULDD1, UNC1X	ULDF1	31.11										
		Local Channel-Dedicated-DS1 -Zone 2		2	ULDD1, UNC1X	ULDF1	55.13										
		Local Channel-Dedicated-DS1 -Zone 3		3	ULDD1, UNC1X	ULDF1	87.77										
		Local Channel-Dedicated-DS3-Per Mile per month			ULDD3, UNC3X	1L5NC	1.14										
		Local Channel-Dedicated-DS3-Facility Termination			ULDD3, UNC3X	ULDF3	343.76										
		Local Channel-Dedicated-STS-1- Per Mile per month			ULDS1, UNCSX	1L5NC	1.14										
		Local Channel-Dedicated-STS-1 -Facility Termination			ULDS1, UNCSX	ULDFS	329.05										
HIGH CAPACITY UNBUNDLED LOCAL LOOP																	
	DS-3/STS-1 UNBUNDLED LOCAL LOOP - Stand Alone																
		DS3 Unbundled Local Loop-per mile			UE3	1L5ND	12.95										
		DS3 Unbundled Local Loop-Facility Termination			UE3	UE3PX	229.90	438.46	256.30								
		STS-1Unbundled Local Loop-per mile			UDLSX	1L5ND	12.95										
		STS-1 Unbundled Local Loop-Facility Termination			UDLSX	UDLS1	257.82	438.46	256.30								
	UNBUNDLED DARK FIBER																
		Dark Fiber-Interoffice Transport, Per Four Fiber Strands, Per Route Mile Or Fraction Thereof			UDF, UDFCX	1L5DF	24.77										
		Dark Fiber-Interoffice Transport, Per Four Fiber Strands, Per Route Mile Or Fraction Thereof			UDF, UDFCX	UDF14		620.60	133.88								
DARK FIBER																	

UNBUNDLED NETWORK ELEMENTS - North Carolina														Attachment: 2 Exh A			
CATEGORY		RATE ELEMENTS	Interim	Zone	BCS	USOC	RATES($)					Svc Order Submitted Elec per LSR	Svc Order Submitted Manually per LSR	Incremental Charge - Manual Svc Order vs. Electronic-1st	Incremental Charge - Manual Svc Order vs. Electronic-Add'l	Incremental Charge - Manual Svc Order vs. Electronic-Disc 1st	Incremental Charge - Manual Svc Order vs. Electronic-Disc Add'l
								Nonrecurring		NRC Disconnect		OSS Rates($)					
							Rec	First	Add'l	First	Add'l	SOMEC	SOMAN	SOMAN	SOMAN	SOMAN	SOMAN
		Dark Fiber, Four Fiber Strands, Per Route Mile or Fraction Thereof per month-Local Channel			UDF, UDFCX	1L5DC	73.65										
		Dark Fiber, Four Fiber Strands, Per Route Mile or Fraction Thereof per month-Local Loop			UDF, UDFCX	1L5DL	73.65										
8XX ACCESS TEN DIGIT SCREENING																	
		8XX Access Ten Digit Screening, Per Call					0.0005										
LINE INFORMATION DATA BASE ACCESS (LIDB)																	
		LIDB Common Transport Per Query					0.00003										
		LIDB Validation Per Query					0.0134										
		LIDB Originating Point Code Establishment or Change			OQU	NRBPX		62.26									
CALLING NAME (CNAM) SERVICE																	
		CNAM for DB & Non DB Owners, Per Query					0.0009592										
SELECTIVE ROUTING																	
		Selective Routing Per Unique Line Class Code Per Request Per Switch						188.59									
AIN SELECTIVE CARRIER ROUTING																	
		Regional Service Establishment						215,597.00									
		End Office Establishment						347.27									
		Query NRC, per query					0.0053758										
AIN - BELLSOUTH AIN SMS ACCESS SERVICE																	
		AIN SMS Access Service-Service Establishment, Per State, Initial Setup			A1N	CAMSE		294.77									
		AIN SMS Access Service-Port Connection-Dial/Shared Access			A1N	CAMDP		86.94									
		AIN SMS Access Service-Port Connection-ISDN Access			A1N	CAM1P		86.94									
		AIN SMS Access Service-User Identification Codes-Per User ID Code			A1N	CAMAU		200.83									
		AIN SMS Access Service-Security Card, Per User ID Code, Initial or Replacement			A1N	CAMRC		172.05									
		AIN SMS Access Service-Storage, Per Unit (100 Kilobytes)					0.0023										
		AIN SMS Access Service-Session, Per Minute					0.0791										
		AIN SMS Access Service-Company Performed Session, Per Minute					2.08										
ENHANCED EXTENDED LINK (EELs)																	
	Network Elements Used in Combinations																
		2W VG Loop (SL2) in Combination-Zone 1		1	UNCVX	UEAL2	11.96	385.26	72.08								
		2W VG Loop (SL2) in Combination-Zone 2		2	UNCVX	UEAL2	17.36	385.26	72.08								
		2W VG Loop (SL2) in Combination-Zone 3		3	UNCVX	UEAL2	25.23	385.26	72.08								
		4W Analog VG Loop in Combination -Zone 1		1	UNCVX	UEAL4	19.52	385.26	72.08								
		4W Analog VG Loop in Combination -Zone 2		2	UNCVX	UEAL4	24.74	385.26	72.08								
		4W Analog VG Loop in Combination -Zone 3		3	UNCVX	UEAL4	46.11	385.26	72.08								
		2W ISDN Loop in Combination-Zone 1		1	UNCNX	U1L2X	19.78	385.26	72.08								
		2W ISDN Loop in Combination-Zone 2		2	UNCNX	U1L2X	26.16	385.26	72.08								
		2W ISDN Loop in Combination-Zone 3		3	UNCNX	U1L2X	35.37	385.26	72.08								
		4W 56Kbps Digital Grade Loop in Combination-Zone 1		1	UNCDX	UDL56	21.98	385.26	72.08								
		4W 56Kbps Digital Grade Loop in Combination-Zone 2		2	UNCDX	UDL56	27.58	385.26	72.08								
		4W 56Kbps Digital Grade Loop in Combination-Zone 3		3	UNCDX	UDL56	43.08	385.26	72.08								
		4W 64Kbps Digital Grade Loop in Combination-Zone 1		1	UNCDX	UDL64	21.98	385.26	72.08								
		4W 64Kbps Digital Grade Loop in Combination-Zone 2		2	UNCDX	UDL64	27.58	385.26	72.08								
		4W 64Kbps Digital Grade Loop in Combination-Zone 3		3	UNCDX	UDL64	43.08	385.26	72.08								
		4W DS1 Digital Loop in Combination-Zone 1		1	UNC1X	USLXX	63.62	412.03	139.55								
		4W DS1 Digital Loop in Combination-Zone 2		2	UNC1X	USLXX	104.40	412.03	139.55								
		4W DS1 Digital Loop in Combination-Zone 3		3	UNC1X	USLXX	210.22	412.03	139.55								
		DS3 Local Loop in combination-per mile			UNC3X	1L5ND	12.95										
		DS3 Local Loop in combination-Facility Termination			UNC3X	UE3PX	229.90	3,073.55	1,245.84								
		STS-1 Local Loop in combination-per mile			UNCSX	1L5ND	12.95										
		STS-1 Local Loop in combination-Facility Termination			UNCSX	UDLS1	257.82	3,073.55	1,245.84								
		Interoffice Channel in combination-2W VG-per mile			UNCVX	1L5XX	0.0095										
		Interoffice Channel in combination-2W VG-Facility Termination			UNCVX	U1TV2	12.12	131.81	78.34								
		Interoffice Channel in combination-4W VG-per mile			UNCVX	1L5XX	0.0095										
		Interoffice Channel in combination-4W VG-Facility Termination			UNCVX	U1TV4	10.19	131.81	78.34								
		Interoffice Channel in combination-4W 56 kbps-per mile			UNCDX	1L5XX	0.0095										

UNBUNDLED NETWORK ELEMENTS - North Carolina														Attachment: 2 Exh A			
CATEGORY		RATE ELEMENTS	Interim	Zone	BCS	USOC	RATES($)					Svc Order Submitted Elec per LSR	Svc Order Submitted Manually per LSR	Incremental Charge - Manual Svc Order vs. Electronic-1st	Incremental Charge - Manual Svc Order vs. Electronic-Add'l	Incremental Charge - Manual Svc Order vs. Electronic-Disc 1st	Incremental Charge - Manual Svc Order vs. Electronic-Disc Add'l
								Nonrecurring		NRC Disconnect		OSS Rates($)					
							Rec	First	Add'l	First	Add'l	SOMEC	SOMAN	SOMAN	SOMAN	SOMAN	SOMAN
		Interoffice Channel in combination-4W 56 kbps-Facility Termination			UNCDX	U1TD5	7.47	131.81	78.34								
		Interoffice Channel in combination-4W 64 kbps-per mile			UNCDX	1L5XX	0.0095										
		Interoffice Channel in combination-4W 64 kbps-Facility Termination			UNCDX	U1TD6	7.47	131.81	78.34								
		Interoffice Channel in combination-DS1-per mile			UNC1X	1L5XX	0.1938										
		Interoffice Channel in combination-DS1 Facility Termination			UNC1X	U1TF1	31.06	234.02	162.52								
		Interoffice Channel in combination-DS3-per mile			UNC3X	1L5XX	4.44										
		Interoffice Channel in combination-DS3-Facility Termination			UNC3X	U1TF3	329.91	802.81	146.02								
		Interoffice Channel in combination-STS-1-per mile			UNCSX	1L5XX	4.44										
		Interoffice Channel in combination-STS-1 Facility Termination			UNCSX	U1TFS	339.20	802.81	146.02								
ADDITIONAL NETWORK ELEMENTS																	
	Optional Features & Functions:																
		Clear Channel Capability Extended Frame Option-per DS1	I		U1TD1, ULDD1,UNC1X	CCOEF		0.00	0.00	0.00	0.00						
		Clear Channel Capability Super FrameOption-per DS1	I		U1TD1, ULDD1,UNC1X	CCOSF		0.00	0.00	0.00	0.00						
		Clear Channel Capability (SF/ESF) Option-Subsequent Activity-per DS1	I		ULDD1, U1TD1, UNC1X, USL	NRCCC		184.76	23.80	1.99	0.78						
		C-bit Parity Option-Subsequent Activity-per DS3	i		U1TD3, ULDD3, UE3, UNC3X	NRCC3		218.92	7.66	0.7576	0.00						
		DS1/DS0 Channel System			UNC1X	MQ1	70.84	170.57									
		DS3/DS1Channel System			UNC3X	MQ3	84.32										
		VG COCI in combination			UNCVX	1D1VG	0.4329	54.14	17.51								
		VG COCI-for Local Loop			UEA	1D1VG	0.4329	54.14	17.51								
		VG COCI-for connection to a channelized DS1 Local Channel in the same SWC as collocation			U1TUC	1D1VG	0.4329	54.14	17.51								
		OCU-DP COCI (2.4-64kbs) in combination			UNCDX	1D1DD	0.9199	54.14	17.51								
		OCU-DP COCI (2.4-64kbs)-for Local Loop			UDL	1D1DD	0.9199	54.14	17.51								
		OCU-DP COCI (2.4-64kbs)-for connection to a channelized DS1 Local Channel in the same SWC as collocation			U1TUD	1D1DD	0.9199	54.14	17.51								
		2W ISDN COCI (BRITE) in combination			UNCNX	UC1CA	1.53	54.14	17.51								
		2W ISDN COCI (BRITE)-for Local Loop			UDN	UC1CA	1.53	54.14	17.51								
		2W ISDN COCI (BRITE)-for connection to a channelized DS1 Local Channel in the same SWC as collocation			U1TUB	UC1CA	1.53	54.14	17.51								
		DS1 COCI in combination			UNC1X	UC1D1	8.43	54.14	17.51								
		DS1 COCI-for Local Loop			USL	UC1D1	8.43	54.14	17.51								
		DS1 COCI-for connection to a channelized DS1 Local Channel in the same SWC as collocation			U1TUA	UC1D1	8.43	54.14	17.51								
		DS1 COCI-for Interoffice Channel			U1TD1	UC1D1	8.43	54.14	17.51								
		DS1 COCI-for Local Channel			ULDD1	UC1D1	8.43	54.14	17.51								
		Wholesale to UNE, Switch-As-Is Conversion Charge			UNCVX, U1TVX, UNCDX, U1TDX, UNC1X, U1TD1,UNC3X, U1TD3, UNCSX, U1TS1, UDF,UDFCX	UNCCC		5.43	5.43								
		Unbundled Misc Rate Element, SNE SAI, Single Network Element-Switch As Is Non-recurring Charge, per circuit (LSR)	I		U1TVX, U1TDX, U1TD1, U1TD3, U1TS1, UDF, UE3	URESL		36.90	16.15								
		Unbundled Misc Rate Element, SNE SAI, Single Network Element-Switch As Is Non-recurring Charge, incremental charge per circuit on a spreadsheet	i		U1TVX, U1TDX, U1TD1, U1TD3, U1TS1, UDF, UE3	URESP		1.49	1.49								
		UNE Reconfiguration Change Charge per Circuit	I		UNC1X	URERC		35.00	35.00								
		UNE Reconfiguration Change Charge per Circuit Project Managed	I		UNC1X	URERP		1.49	1.49								
	Access to DCS - Customer Reconfiguration (FlexServ)																
		Customer Reconfiguration Establishment						1.43	1.43								
		DS1 DCS Termination with DS0 Switching					21.64	24.81	19.09								
		DS1 DCS Termination with DS1 Switching					7.32	17.93	12.22								
		DS3 DCS Termination with DS1 Switching					136.07	24.81	19.09								

CATEGORY	RATE ELEMENTS	Interim	Zone	BCS	USOC	RATES($)					Svc Order Submitted Elec per LSR	Svc Order Submitted Manually per LSR	Incremental Charge - Manual Svc Order vs. Electronic-1st	Incremental Charge - Manual Svc Order vs. Electronic-Add'l	Incremental Charge - Manual Svc Order vs. Electronic-Disc 1st	Incremental Charge - Manual Svc Order vs. Electronic-Disc Add'l
							Nonrecurring		NRC Disconnect		OSS Rates($)					
						Rec	First	Add'l	First	Add'l	SOMEC	SOMAN	SOMAN	SOMAN	SOMAN	SOMAN
	Node (SynchroNet)															
	Node per month			UNCDX	UNCNT	16.00										
	Service Rearrangements															
	NRC-Change in Facility Assignment per circuit Service Rearrangement	I		U1TVX, U1TDX, UEA, UDL, U1TUC, U1TUD, U1TUB, ULDVX, ULDDX, UNCVX, UNCDX, UNC1X	URETD		100.82	42.93								
	NRC-Change in Facility Assignment per circuit Project Management (added to CFA per circuit if project managed)	I		U1TVX, U1TDX, UEA, UDL, U1TUC, U1TUD, U1TUB, ULDVX, ULDDX, UNCVX, UNCDX, UNC1X	URETB		1.29	1.29								
	NRC-Order Coordination Specific Time-Dedicated Transport	I		UNC1X	OCOSR		18.89	18.89								
COMMINGLING																
	Commingling Authorization			UNCVX, UNCDX, UNC1X, UNC3X, UNCSX, U1TD1, U1TD3, U1TS1, UE3, UDLSX, U1TVX, U1TDX, U1TUB, ULDVX, ULDD1, ULDD3, ULDS1	CMGAU	0.00	0.00	0.00								
	Commingled (UNE part of single bandwidth circuit)															
	Commingled VG COCI			XDV2X, NTCVG	1D1VG	0.4329	54.14	17.51								
	Commingled Digital COCI			XDV6X, NTCUD	1D1DD	0.9199	54.14	17.51								
	Commingled ISDN COCI			XDD4X	UC1CA	1.53	54.14	17.51								
	Commingled 2W VG Interoffice Channel Facility Termination			XDV2X	U1TV2	12.12	131.81	78.34								
	Commingled 4W VG Interoffice Channel Facility Termination			XDV6X	U1TV4	10.19	131.81	78.34								
	Commingled 56kbps Interoffice Channel Facility Termination			XDD4X	U1TD5	7.47	131.81	78.34								
	Commingled 64kbps Interoffice Channel Facility Termination			XDD4X	U1TD6	7.47	131.81	78.34								
	Commingled VG/DS0 Interoffice Channel per mile			XDV2X, XDV6X, XDD4X	1L5XX	0.0095										
	Commingled 2W Local Loop Zone 1		1	XDV2X	UEAL2	11.96	385.26	72.08								
	Commingled 2W Local Loop Zone 2		2	XDV2X	UEAL2	17.36	385.26	72.08								
	Commingled 2W Local Loop Zone 3		3	XDV2X	UEAL2	25.23	385.26	72.08								
	Commingled 4W Local Loop Zone 1		1	XDV6X	UEAL4	19.52	385.26	72.08								
	Commingled 4W Local Loop Zone 2		2	XDV6X	UEAL4	24.74	385.26	72.08								
	Commingled 4W Local Loop Zone 3		3	XDV6X	UEAL4	46.11	385.26	72.08								
	Commingled 56kbps Local Loop Zone 1		1	XDD4X	UDL56	21.98	385.26	72.08								
	Commingled 56kbps Local Loop Zone 2		2	XDD4X	UDL56	27.58	385.26	72.08								
	Commingled 56kbps Local Loop Zone 3		3	XDD4X	UDL56	43.08	385.26	72.08								
	Commingled 64kbps Local Loop Zone 1		1	XDD4X	UDL64	21.98	385.26	72.08								
	Commingled 64kbps Local Loop Zone 2		2	XDD4X	UDL64	27.58	385.26	72.08								
	Commingled 64kbps Local Loop Zone 3		3	XDD4X	UDL64	43.08	385.26	72.08								
	Commingled ISDN Local Loop Zone 1		1	XDD4X	U1L2X	19.78	385.26	72.08								
	Commingled ISDN Local Loop Zone 2		2	XDD4X	U1L2X	26.16	385.26	72.08								
	Commingled ISDN Local Loop Zone 3		3	XDD4X	U1L2X	35.37	385.26	72.08								
	Commingled DS1 COCI			XDH1X, NTCD1	UC1D1	8.43	54.14	17.51								
	Commingled DS1 Interoffice Channel Facility Termination			XDH1X	U1TF1	31.06	234.02	162.52								
	Commingled DS1 Interoffice Channel per mile			XDH1X	1L5XX	0.1938										
	Commingled DS1/DS0 Channel System			XDH1X	MQ1	70.84	170.57									
	Commingled DS1 Local Loop Zone 1		1	XDH1X	USLXX	63.62	412.03	139.55								
	Commingled DS1 Local Loop Zone 2		2	XDH1X	USLXX	104.40	412.03	139.55								
	Commingled DS1 Local Loop Zone 3		3	XDH1X	USLXX	210.22	412.03	139.55								
	Commingled DS3 Local Loop Facility Termination			HFQC6	UE3PX	229.90	3,073.55	1,245.84								

UNBUNDLED NETWORK ELEMENTS - North Carolina														Attachment: 2 Exh A			
CATEGORY	RATE ELEMENTS	Interim	Zone	BCS	USOC	RATES($)					Svc Order Submitted Elec per LSR	Svc Order Submitted Manually per LSR	Incremental Charge - Manual Svc Order vs. Electronic-1st	Incremental Charge - Manual Svc Order vs. Electronic-Add'l	Incremental Charge - Manual Svc Order vs. Electronic-Disc 1st	Incremental Charge - Manual Svc Order vs. Electronic-Disc Add'l
							Nonrecurring		NRC Disconnect		OSS Rates($)					
						Rec	First	Add'l	First	Add'l	SOMEC	SOMAN	SOMAN	SOMAN	SOMAN	SOMAN
	Commingled DS3/STS-1 Local Loop per mile			HFQC6, HFRST	1L5ND	12.95										
	Commingled STS-1 Local Loop Facility Termination			HFRST	UDLS1	257.82	3,073.55	1,245.84								
	Commingled DS3/DS1 Channel System			HFQC6	MQ3	84.32										
	Commingled DS3 Interoffice Channel Facility Termination			HFQC6	U1TF3	329.91	802.81	146.02								
	Commingled DS3 Interoffice Channel per mile			HFQC6	1L5XX	4.44										
	Commingled STS-1Interoffice Channel Facility Termination			HFRST	U1TFS	339.20	802.81	146.02								
	Commingled STS-1Interoffice Channel per mile			HFRST	1L5XX	4.44										
	Commingled Dark Fiber-Interoffice Transport, Per Four Fiber Strands, Per Route Mile Or Fraction Thereof			HEQDL	1L5DF	24.77										
	Commingled Dark Fiber-Interoffice Transport, Per Four Fiber Strands, Per Route Mile Or Fraction Thereof			HEQDL	UDF14		620.60	133.88								
SIGNALING (CCS7)																
	NOTE:"bk" beside a rate indicates that the parties have agreed to bill and keep for that element pursuant to the terms and conditions in Attachment 3.															
	CCS7 Signaling Usage, Per TCAP Message					0.0000374bk										
	CCS7 Signaling Usage, Per ISUP Message					0.0000094bk										
LNP Query Service																
	LNP Charge Per query					0.0007579										
	LNP Service Establishment Manual						12.16									
	LNP Service Provisioning with Point Code Establishment						576.33	294.43								
911 PBX LOCATE																
	911 PBX LOCATE DATABASE CAPABILITY															
	Service Establishment per CLEC per End User Account			9PBDC	9PBEU		1,823.00									
	Changes to TN Range or Customer Profile			9PBDC	9PBTN		182.45									
	Per Telephone Number (Monthly)			9PBDC	9PBMM	0.07										
	Change Company (Service Provider) ID			9PBDC	9PBPC		535.57									
	PBX Locate Service Support per CLEC (Monthlt)			9PBDC	9PBMR	165.63										
	Service Order Charge			9PBDC	9PBSC		15.20									
	911 PBX LOCATE TRANSPORT COMPONENT															
	See Att 3															
	Note: Rates displaying an "I" in Interim column are interim as a result of a Commission order.															
UNBUNDLED LOCAL EXCHANGE SWITCHING(PORTS)																
	The Exchange Switching Port Rates Reflected Here Apply to Embedded Base Switching Ports as of March 10, 2005 and Consist of the TELRIC Cost Based Rates Plus $1.00 in Accordance with the TRRO.															
	Exchange Ports															
	NOTE: Although the Port Rate includes all available features in GA, KY, LA & TN, the desired features will need to be ordered using retail USOCs															
	2-WIRE VOICE GRADE LINE PORT RATES (RES)															
	Exchange Ports-2W Analog Line Port- Res.			UEPSR	UEPRL	3.19	21.60	21.60								
	Exchange Ports-2W Analog Line Port with Caller ID-Res.			UEPSR	UEPRC	3.19	21.60	21.60								
	Exchange Ports-2W Analog Line Port outgoing only-Res.			UEPSR	UEPRO	3.19	21.60	21.60								
	Exchange Ports-2W VG unbundled res, low usage line port with Caller ID (LUM)			UEPSR	UEPAP	3.19	21.60	21.60								
	2W voice unbundled Low Usage Line Port w/o Caller ID Capability			UEPSR	UEPRT	3.19	21.60	21.60								
	2W VG Unbundled Port w/o Caller ID capability, NC			UEPSR	UEPRZ	3.19	21.60	21.60								
	2W VG Unbundled Port with Caller ID capability, NC			UEPSR	UEPRY	3.19	21.60	21.60								
	Subsequent Activity			UEPSR	USASC	0.00	0.00	0.00								
	FEATURES															
	All Available Vertical Features			UEPSR	UEPVF	3.40	0.00	0.00								
	2-WIRE VOICE GRADE LINE PORT RATES (BUS)															
	Exchange Ports-2W Analog Line Port w/o Caller ID-Bus			UEPSB	UEPBL	3.19	21.60	21.60								
	Exchange Ports-2W VG unbundled Line Port with unbundled port with Caller+E484 ID-Bus.			UEPSB	UEPBC	3.19	21.60	21.60								
	Exchange Ports-2W Analog Line Port outgoing only-Bus.			UEPSB	UEPBO	3.19	21.60	21.60								
	Exhange Ports-2W VG unbundled incoming only port with Caller ID-Bus			UEPSB	UEPB1	3.19	21.60	21.60								
	2W voice unbundled Incoming Only Port w/o Caller ID Capability			UEPSB	UEPBE	3.19	21.60	21.60								
	Subsequent Activity			UEPSB	USASC	0.00	0.00	0.00								
	FEATURES															
	All Available Vertical Features			UEPSB	UEPVF	3.40	0.00	0.00								
	EXCHANGE PORT RATES (DID & PBX)															
	2W VG Unbundled 2-Way PBX Trunk-Res			UEPSE	UEPRD	3.18	21.60	21.60								

CATEGORY	RATE ELEMENTS	Interim	Zone	BCS	USOC	RATES($)					Svc Order Submitted Elec per LSR	Svc Order Submitted Manually per LSR	Incremental Charge - Manual Svc Order vs. Electronic-1st	Incremental Charge - Manual Svc Order vs. Electronic-Add'l	Incremental Charge - Manual Svc Order vs. Electronic-Disc 1st	Incremental Charge - Manual Svc Order vs. Electronic-Disc Add'l
							Nonrecurring		NRC Disconnect		OSS Rates($)					
						Rec	First	Add'l	First	Add'l	SOMEC	SOMAN	SOMAN	SOMAN	SOMAN	SOMAN
	2W VG Line Side Unbundled 2-Way PBX Trunk-Bus			UEPSP	UEPPC	3.18	21.60	21.60								
	2W VG Line Side Unbundled Outward PBX Trunk-Bus			UEPSP	UEPPO	3.18	21.60	21.60								
	2W VG Line Side Unbundled Incoming PBX Trunk-Bus			UEPSP	UEPP1	3.18	21.60	21.60								
	2W Analog Long Distance Terminal PBX Trunk-Bus			UEPSP	UEPLD	3.18	21.60	21.60								
	2W Voice Unbundled PBX LD Terminal Ports			UEPSP	UEPLD	3.18	21.60	21.60								
	2W Vice Unbundled 2-Way PBX Usage Port			UEPSP	UEPXA	3.18	21.60	21.60								
	2W Voice Unbundled PBX Toll Terminal Hotel Ports			UEPSP	UEPXB	3.18	21.60	21.60								
	2W Voice Unbundled PBX LD DDD Terminals Port			UEPSP	UEPXC	3.18	21.60	21.60								
	2W Voice Unbundled PBX LD Terminal Switchboard Port			UEPSP	UEPXD	3.18	21.60	21.60								
	2W Voice Unbundled PBX LD Terminal Switchboard IDD Capable Port			UEPSP	UEPXE	3.18	21.60	21.60								
	2W Voice Unbundled 2-Way PBX Hotel/Hospital Economy Administrative Calling Port			UEPSP	UEPXL	3.18	21.60	21.60								
	2W Voice Unbundled 2-Way PBX Hotel/Hospital Economy Rm Calling Port			UEPSP	UEPXM	3.18	21.60	21.60								
	2W Voice Unbundled 1-Way Outgoing PBX Hotel/Hospital Discount Rm Calling Port			UEPSP	UEPXO	3.18	21.60	21.60								
	2W Voice Unbundled 1-Way Outgoing PBX Measured Port			UEPSP	UEPXS	3.18	21.60	21.60								
	Subsequent Activity			UEPSP	USASC	0.00	0.00	0.00								
FEATURES																
	All Available Vertical Features			UEPSP UEPSE	UEPVF	3.40	0.00	0.00								
NOTE: Transmission/usage charges associated with POTS circuit switched usage will also apply to circuit switched voice and/or circuit switched data transmission by B-Channels associated with 2-wire ISDN ports.																
NOTE: Access to B Channel or D Channel Packet capabilities will be available only through BFR/New Business Request Process. Rates for the packet capabilities will be determined via the Bona Fide Request/New Business Request Process.																
2-WIRE VOICE GRADE LINE PORT RATES (DID)																
	Exchange Ports-2W DID Port			UEPEX	UEPP2	13.36	81.84	81.84								
2-WIRE VOICE GRADE LINE PORT RATES (ISDN-BRI)																
	Exchange Ports-2W ISDN Port (See Notes below.)			UEPTX, UEPSX	U1PMA	25.50	62.29	62.29								
	All Features Offered			UEPTX, UEPSX	UEPVF	3.40	0.00	0.00								
	Exchange Ports-2W ISDN Port -- Channel Profiles			UEPTX, UEPSX	U1UMA	0.00	0.00	0.00								
NOTE: Transmission/usage charges associated with POTS circuit switched usage will also apply to circuit switched voice and/or circuit switched data transmission by B-Channels associated with 2-wire ISDN ports.																
NOTE: Access to B Channel or D Channel Packet capabilities will be available only through BFR/New Business Request Process. Rates for the packet capabilities will be determined via the Bona Fide Request/New Business Request Process.																
UNBUNDLED PORT with REMOTE CALL FORWARDING CAPABILITY																
UNBUNDLED REMOTE CALL FORWARDING SERVICE - RESIDENCE																
	Unbundled Remote Call Forwarding Service, Area Calling, Res			UEPVR	UERAC	3.19	21.60	21.60								
	Unbundled Remote Call Forwarding Service, Local Calling-Res			UEPVR	UERLC	3.19	21.60	21.60								
	Unbundled Remote Call Forwarding Service, InterLATA-Res			UEPVR	UERTE	3.19	21.60	21.60								
	Unbundled Remote Call Forwarding Service, IntraLATA-Res			UEPVR	UERTR	3.19	21.60	21.60								
Non-Recurring																
	Unbundled Remote Call Forwarding Service -Conversion-Switch-as-is			UEPVR	USAC2		2.77	0.40								
	Unbundled Remote Call Forwarding Service -Conversion with allowed change (PIC and LPIC)			UEPVR	USACC		2.77	0.40								
UNBUNDLED REMOTE CALL FORWARDING - Bus																
	Unbundled Remote Call Forwarding Service, Area Calling-Bus			UEPVB	UERAC	3.19	21.60	21.60								
	Unbundled Remote Call Forwarding Service, Local Calling-Bus			UEPVB	UERLC	3.19	21.60	21.60								
	Unbundled Remote Call Forwarding Service, InterLATA-Bus			UEPVB	UERTE	3.19	21.60	21.60								
	Unbundled Remote Call Forwarding Service, IntraLATA-Bus			UEPVB	UERTR	3.19	21.60	21.60								
	Unbundled Remote Call Forwarding Service Expanded and Exception Local Calling			UEPVB	UERVJ	3.19	21.60	21.60								
Non-Recurring																
	Unbundled Remote Call Forwarding Service-Conversion-Switch-as-is			UEPVB	USAC2		2.77	0.40								
	Unbundled Remote Call Forwarding Service -Conversion with allowed change (PIC and LPIC)			UEPVB	USACC		2.77	0.40								
UNBUNDLED LOCAL SWITCHING, PORT USAGE																
End Office Switching (Port Usage)																
	End Office Switching Function, Per MOU					0.0015										
	End Office Trunk Port-Shared, Per MOU					0.00023										
Tandem Switching (Port Usage) (Local or Access Tandem)																
	Tandem Switching Function Per MOU					0.0006										
	Tandem Trunk Port-Shared, Per MOU					0.0003										

UNBUNDLED NETWORK ELEMENTS - North Carolina														Attachment: 2 Exh A			
CATEGORY	RATE ELEMENTS	Interim	Zone	BCS	USOC	RATES($)					Svc Order Submitted Elec per LSR	Svc Order Submitted Manually per LSR	Incremental Charge - Manual Svc Order vs. Electronic-1st	Incremental Charge - Manual Svc Order vs. Electronic-Add'l	Incremental Charge - Manual Svc Order vs. Electronic-Disc 1st	Incremental Charge - Manual Svc Order vs. Electronic-Disc Add'l
							Nonrecurring		NRC Disconnect		OSS Rates($)					
						Rec	First	Add'l	First	Add'l	SOMEC	SOMAN	SOMAN	SOMAN	SOMAN	SOMAN
	Tandem Switching Function Per MOU (Melded)					0.00024618										
	Tandem Trunk Port-Shared, Per MOU (Melded)					0.00012309										
	Melded Factor: 41.03% of the Tandem Rate															
	Common Transport															
	Common Transport-Per Mile, Per MOU					0.00001										
	Common Transport-Facilities Termination Per MOU					0.00034										
UNBUNDLED PORT/LOOP COMBINATIONS - COST BASED RATES																
	>Cost Based Rates are applied where BellSouth is required by FCC and/or State Commission rule to provide Unbundled Local Switching or Switch Ports.															
	>The UNE-P Switching Port Rates Reflected in the Cost Based Section Apply to Embedded Base UNE-Ps as of March 10, 2005 and Consist of the TELRIC Cost Based Rates Plus $1.00 in Accordance with the TRRO.															
	>Features shall apply to the Unbundled Port/Loop Combination - Cost Based Rate section in the same manner as they are applied to the Stand-Alone Unbundled Port section of this Rate Exhibit.															
	>End Office and Tandem Switching Usage and Common Transport Usage rates in the Port section of this rate exhibit shall apply to all combinations of loop/port network elements except for UNE Coin Port/Loop Combinations.															
	>The first and additional Port nonrecurring charges apply to Not Currently Combined Combos. For Currently Combined Combos the nonrecurring charges shall be those identified in the Nonrecurring - Currently Combined sections.															
	2-WIRE VOICE GRADE LOOP WITH 2-WIRE LINE PORT (RES)															
	UNE Port/Loop Combination Rates															
	2W VG Loop/Port Combo-Zone 1					14.03										
	2W VG Loop/Port Combo-Zone 2					22.33										
	2W VG Loop/Port Combo-Zone 3					33.61										
	UNE Loop Rates															
	2W VG Loop (SL1)-Zone 1		1	UEPRX	UEPLX	10.75										
	2W VG Loop (SL1)-Zone 2		2	UEPRX	UEPLX	19.05										
	2W VG Loop (SL1)-Zone 3		3	UEPRX	UEPLX	30.33										
	2-Wire Voice Grade Line Port Rates (Res)															
	2W voice unbundled port-residence			UEPRX	UEPRL	3.28	79.59	63.97								
	2W voice unbundled port with Caller ID-res			UEPRX	UEPRC	3.28	79.59	63.97								
	2W voice unbundled port outgoing only-res			UEPRX	UEPRO	3.28	79.59	63.97								
	2W voice unbundles res, low usage line port with Caller ID (LUM)			UEPRX	UEPAP	3.28	79.59	63.97								
	2W voice unbundled Low Usage Line Port w/o Caller ID Capability			UEPRX	UEPRT	3.28	79.59	63.97								
	2W VG Unbundled Port w/o Caller ID capability, NC			UEPRX	UEPRZ	3.28	79.59	63.97								
	2W VG Unbundled Port w/o Caller ID capability, NC			UEPRX	UEPRY	3.28	79.59	63.97								
	FEATURES															
	All Features Offered			UEPRX	UEPVF	3.40	0.00	0.00								
	NONRECURRING CHARGES (NRCs) - CURRENTLY COMBINED															
	2W VG Loop/Line Port Combination-Conversion-Switch-as-is			UEPRX	USAC2		2.77	0.40								
	2W VG Loop/Line Port Combination -Conversion-Switch with change			UEPRX	USACC		2.77	0.40								
	2W VG Loop/Line Port Combination -Conversion-Subsequent Database Update						1.42									
	2W VG Loop/Line Port Platform-Installation Charge at QuickService location-Not Conversion of Existing Service			UEPRX	URECC		2.77									
	ADDITIONAL NRCs															
	2W VG Loop/Line Port Combination-Subsequent Activity			UEPRX	USAS2	0.00	0.00	0.00								
	Unbundled Misc Rate Element, Tag Loop at End User Premise			UEPRX	URETL		8.33	0.83								
	OFF/ON PREMISES EXTENSION CHANNELS															
	2W Analog VG Extension Loop – Non-Design		1	UEPRX	UEAEN	12.11	57.99	42.37								
	2W Analog VG Extension Loop – Non-Design		2	UEPRX	UEAEN	21.24	57.99	42.37								
	2W Analog VG Extension Loop – Non-Design		3	UEPRX	UEAEN	33.65	57.99	42.37								
	2W Analog VG Extension Loop – Design		1	UEPRX	UEAED	14.97	142.97	106.56								
	2W Analog VG Extension Loop – Design		2	UEPRX	UEAED	25.93	142.97	106.56								
	2W Analog VG Extension Loop – Design		3	UEPRX	UEAED	40.81	142.97	106.56								
	INTEROFFICE TRANSPORT															
	Interoffice Transport-Dedicated-2W VG-Facility Termination			UEPRX	U1TV2	18.00	137.48	52.58								
	Interoffice Transport-Dedicated-2W VG-Per Mile or Fraction Mile			UEPRX	U1TVM	0.0125	0.00	0.00								
	2-WIRE VOICE GRADE LOOP WITH 2-WIRE LINE PORT (BUS)															
	UNE Port/Loop Combination Rates															
	2W VG Loop/Port Combo-Zone 1					14.03										
	2W VG Loop/Port Combo-Zone 2					22.33										
	2W VG Loop/Port Combo-Zone 3					33.61										
	UNE Loop Rates															
	2W VG Loop (SL1)-Zone 1		1	UEPBX	UEPLX	10.75										
	2W VG Loop (SL1)-Zone 2		2	UEPBX	UEPLX	19.05										

CATEGORY	RATE ELEMENTS	Interim	Zone	BCS	USOC	RATES($)					Svc Order Submitted Elec per LSR	Svc Order Submitted Manually per LSR	Incremental Charge - Manual Svc Order vs. Electronic-1st	Incremental Charge - Manual Svc Order vs. Electronic-Add'l	Incremental Charge - Manual Svc Order vs. Electronic-Disc 1st	Incremental Charge - Manual Svc Order vs. Electronic-Disc Add'l
							Nonrecurring		NRC Disconnect		OSS Rates($)					
						Rec	First	Add'l	First	Add'l	SOMEC	SOMAN	SOMAN	SOMAN	SOMAN	SOMAN
	2W VG Loop (SL1)-Zone 3		3	UEPBX	UEPLX	30.33										
2-Wire Voice Grade Line Port (Bus)																
	2W voice unbundled port w/o Caller ID-bus			UEPBX	UEPBL	3.28	79.59	63.97								
	2W voice unbundled port with Caller + E484 ID-bus			UEPBX	UEPBC	3.28	79.59	63.97								
	2W voice unbundled port outgoing only-bus			UEPBX	UEPBO	3.28	79.59	63.97								
	2W voice unbundled incoming only port with Caller ID-Bus			UEPBX	UEPB1	3.28	79.59	63.97								
	2W voice unbundled Incoming Only Port w/o Caller ID Capability			UEPBX	UEPBE	3.28	79.59	63.97								
FEATURES																
	All Features Offered			UEPBX	UEPVF	3.40	0.00	0.00								
NONRECURRING CHARGES (NRCs) - CURRENTLY COMBINED																
	2W VG Loop/Line Port Combination-Conversion-Switch-as-is			UEPBX	USAC2		2.77	0.40								
	2W VG Loop/Line Port Combination -Conversion-Switch with change			UEPBX	USACC		2.77	0.40								
	2W VG Loop/Line Port Combination -Conversion-Subsequent Database Update						1.42									
ADDITIONAL NRCs																
	2W VG Loop/Line Port Combination-Subsequent Activity			UEPBX	USAS2		0.00	0.00								
	Unbundled Misc Rate Element, Tag Loop at End User Premise			UEPBX	URETL		8.33	0.83								
OFF/ON PREMISES EXTENSION CHANNELS																
	2W Analog VG Extension Loop – Non-Design		1	UEPBX	UEAEN	12.11	57.99	42.37								
	2W Analog VG Extension Loop – Non-Design		2	UEPBX	UEAEN	21.24	57.99	42.37								
	2W Analog VG Extension Loop – Non-Design		3	UEPBX	UEAEN	33.65	57.99	42.37								
	2W Analog VG Extension Loop – Design		1	UEPBX	UEAED	14.97	142.97	106.56								
	2W Analog VG Extension Loop – Design		2	UEPBX	UEAED	25.93	142.97	106.56								
	2W Analog VG Extension Loop – Design		3	UEPBX	UEAED	40.81	142.97	106.56								
INTEROFFICE TRANSPORT																
	Interoffice Transport-Dedicated-2W VG-Facility Termination			UEPBX	U1TV2	18.00	137.48	52.58								
	Interoffice Transport-Dedicated-2W VG-Per Mile or Fraction Mile			UEPBX	U1TVM	0.0125	0.00	0.00								
2-WIRE VOICE GRADE LOOP WITH 2-WIRE LINE PORT (RES - PBX)																
UNE Port/Loop Combination Rates																
	2W VG Loop/Port Combo-Zone 1					14.03										
	2W VG Loop/Port Combo-Zone 2					22.33										
	2W VG Loop/Port Combo-Zone 3					33.61										
UNE Loop Rates																
	2W VG Loop (SL 1)-Zone 1		1	UEPRG	UEPLX	10.75										
	2W VG Loop (SL 1)-Zone 2		2	UEPRG	UEPLX	19.05										
	2W VG Loop (SL 1)-Zone 3		3	UEPRG	UEPLX	30.33										
2-Wire Voice Grade Line Port Rates (RES - PBX)																
	2W VG Unbundled Combination 2-Way PBX Trunk Port-Res			UEPRG	UEPRD	3.28	164.57	128.16								
FEATURES																
	All Features Offered			UEPRG	UEPVF	3.40	0.00	0.00								
NONRECURRING CHARGES (NRCs) - CURRENTLY COMBINED																
	2W VG Loop/ Line Port Combination (PBX)-Conversion-Switch-As-Is			UEPRG	USAC2		2.77	0.40								
	2W VG Loop/ Line Port Combination (PBX)-Conversion-Switch with Change			UEPRG	USACC		2.77	0.40								
	2W VG Loop/Line Port Combination -Conversion-Subsequent Database Update						1.42									
ADDITIONAL NRCs																
	2W VG Loop/ Line Port Combination (PBX)-Subsequent Activity			UEPRG	USAS2	0.00	0.00	0.00								
	Unbundled Misc Rate Element, Tag Loop at End User Premise			UEPRG	URETL		8.33	0.83								
OFF/ON PREMISES EXTENSION CHANNELS																
	Local Channel VG, per termination		1	UEPRG	P2JHX	14.97	142.97	106.56								
	Local Channel VG, per termination		2	UEPRG	P2JHX	25.93	142.97	106.56								
	Local Channel VG, per termination		3	UEPRG	P2JHX	40.81	142.97	106.56								
	Non-Wire Direct Serve Channel VG		1	UEPRG	SDD2X	14.62	252.06	109.08								
	Non-Wire Direct Serve Channel VG		2	UEPRG	SDD2X	23.86	126.03	54.54								
	Non-Wire Direct Serve Channel VG		3	UEPRG	SDD2X	36.40	126.03	54.54								
INTEROFFICE TRANSPORT																
	Interoffice Transport-Dedicated-2W VG-Facility Termination			UEPRG	U1TV2	18.00	137.48	52.58								
	Interoffice Transport-Dedicated-2W VG-Per Mile or Fraction Mile			UEPRG	U1TVM	0.0125	0.00	0.00								

UNBUNDLED NETWORK ELEMENTS - North Carolina														Attachment: 2 Exh A			
CATEGORY	RATE ELEMENTS	Interim	Zone	BCS	USOC	RATES($)					Svc Order Submitted Elec per LSR	Svc Order Submitted Manually per LSR	Incremental Charge - Manual Svc Order vs. Electronic-1st	Incremental Charge - Manual Svc Order vs. Electronic-Add'l	Incremental Charge - Manual Svc Order vs. Electronic-Disc 1st	Incremental Charge - Manual Svc Order vs. Electronic-Disc Add'l
							Nonrecurring		NRC Disconnect		OSS Rates($)					
						Rec	First	Add'l	First	Add'l	SOMEC	SOMAN	SOMAN	SOMAN	SOMAN	SOMAN
2-WIRE VOICE GRADE LOOP WITH 2-WIRE LINE PORT (BUS - PBX)																
UNE Port/Loop Combination Rates																
	2W VG Loop/Port Combo-Zone 1					14.03										
	2W VG Loop/Port Combo-Zone 2					22.33										
	2W VG Loop/Port Combo-Zone 3					33.61										
UNE Loop Rates																
	2W VG Loop (SL 1)-Zone 1		1	UEPPX	UEPLX	10.75										
	2W VG Loop (SL 1)-Zone 2		2	UEPPX	UEPLX	19.05										
	2W VG Loop (SL 1)-Zone 3		3	UEPPX	UEPLX	30.33										
2-Wire Voice Grade Line Port Rates (BUS - PBX)																
	Line Side Unbundled Combination 2-Way PBX Trunk Port-Bus			UEPPX	UEPPC	3.28	164.57	128.16								
	Line Side Unbundled Outward PBX Trunk Port-Bus			UEPPX	UEPPO	3.28	164.57	128.16								
	Line Side Unbundled Incoming PBX Trunk Port-Bus			UEPPX	UEPP1	3.28	164.57	128.16								
	2W Voice Unbundled PBX LD Terminal Ports			UEPPX	UEPLD	3.28	164.57	128.16								
	2W Voice Unbundled 2-Way Combination PBX Usage Port			UEPPX	UEPXA	3.28	164.57	128.16								
	2W Voice Unbundled PBX Toll Terminal Hotel Ports			UEPPX	UEPXB	3.28	164.57	128.16								
	2W Voice Unbundled PBX LD DDD Terminals Port			UEPPX	UEPXC	3.28	164.57	128.16								
	2W Voice Unbundled PBX LD Terminal Switchboard Port			UEPPX	UEPXD	3.28	164.57	128.16								
	2W Voice Unbundled PBX LD Terminal Switchboard IDD Capable Port			UEPPX	UEPXE	3.28	164.57	128.16								
	2W Voice Unbundled 2-Way PBX Hotel/Hospital Economy Administrative Calling Port			UEPPX	UEPXL	3.28	164.57	128.16								
	2W Voice Unbundled 2-Way PBX Hotel/Hospital Economy Rm Calling Port			UEPPX	UEPXM	3.28	164.57	128.16								
	2W Voice Unbundled 1-Way Outgoing PBX Hotel/Hospital Discount Rm Calling Port			UEPPX	UEPXO	3.28	164.57	128.16								
	2W Voice Unbundled 1-Way Outgoing PBX Measured Port			UEPPX	UEPXS	3.28	164.57	128.16								
FEATURES																
	All Features Offered			UEPPX	UEPVF	3.40	0.00	0.00								
NONRECURRING CHARGES (NRCs) - CURRENTLY COMBINED																
	2W VG Loop/ Line Port Combination (PBX)-Conversion-Switch-As-Is			UEPPX	USAC2		2.77	0.40								
	2W VG Loop/ Line Port Combination (PBX)-Conversion-Switch with Change			UEPPX	USACC		2.77	0.40								
	2W VG Loop/Line Port Combination -Conversion-Subsequent Database Update						1.42									
ADDITIONAL NRCs																
	2W VG Loop/ Line Port Combination (PBX)-Subsequent Activity			UEPPX	USAS2	0.00	0.00	0.00								
	Unbundled Misc Rate Element, Tag Loop at End User Premise			UEPPX	URETL		8.33	0.83								
OFF/ON PREMISES EXTENSION CHANNELS																
	Local Channel VG, per termination		1	UEPPX	P2JHX	14.97	142.97	106.56								
	Local Channel VG, per termination		2	UEPPX	P2JHX	25.93	142.97	106.56								
	Local Channel VG, per termination		3	UEPPX	P2JHX	40.81	142.97	106.56								
	Non-Wire Direct Serve Channel VG		1	UEPPX	SDD2X	14.62	252.06	109.08								
	Non-Wire Direct Serve Channel VG		2	UEPPX	SDD2X	23.86	126.03	54.54								
	Non-Wire Direct Serve Channel VG		3	UEPPX	SDD2X	36.40	126.03	54.54								
INTEROFFICE TRANSPORT																
	Interoffice Transport-Dedicated-2W VG-Facility Termination			UEPPX	U1TV2	18.00	137.48	52.58								
	Interoffice Transport-Dedicated-2W VG-Per Mile or Fraction Mile			UEPPX	U1TVM	0.0125	0.00	0.00								
2-WIRE VOICE GRADE LOOP WITH 2-WIRE ANALOG LINE COIN PORT																
UNE Port/Loop Combination Rates																
	2W VG Coin Port/Loop Combo – Zone 1					14.03										
	2W VG Coin Port/Loop Combo – Zone 2					22.33										
	2W VG Coin Port/Loop Combo – Zone 3					33.61										
UNE Loop Rates																
	2W VG Loop (SL1)-Zone 1		1	UEPCO	UEPLX	10.75										
	2W VG Loop (SL1)-Zone 2		2	UEPCO	UEPLX	19.05										
	2W VG Loop (SL1)-Zone 3		3	UEPCO	UEPLX	30.33										
2-Wire Voice Grade Line Ports (COIN)																
	2W Coin 2-Way w/o Operator Screening and w/o Blocking (NC)			UEPCO	UEPND	3.28	79.59	63.97								

CATEGORY	RATE ELEMENTS	Interim	Zone	BCS	USOC	RATES($)					Svc Order Submitted Elec per LSR	Svc Order Submitted Manually per LSR	Incremental Charge - Manual Svc Order vs. Electronic-1st	Incremental Charge - Manual Svc Order vs. Electronic-Add'l	Incremental Charge - Manual Svc Order vs. Electronic-Disc 1st	Incremental Charge - Manual Svc Order vs. Electronic-Disc Add'l
							Nonrecurring		NRC Disconnect		OSS Rates($)					
						Rec	First	Add'l	First	Add'l	SOMEC	SOMAN	SOMAN	SOMAN	SOMAN	SOMAN
	2W Coin 2-Way with Operator Screening (NC)			UEPCO	UEPNC	3.28	79.59	63.97								
	2W Coin 2-Way with Operator Screening and Blocking: 011, 900/976, 1+DDD (NC, TN)			UEPCO	UEPRP	3.28	79.59	63.97								
	2W Coin 2-Way with Operator Screening and 011 Blocking (NC)			UEPCO	UEPNB	3.28	79.59	63.97								
	2W Coin 2-Way with Operator Screening: 900 Blocking: 900/976, 1+DDD, 011+, and Local (NC, TN)			UEPCO	UEPCA	3.28	79.59	63.97								
	2W Coin Outward with Operator Screening and 011 Blocking (NC)			UEPCO	UEPNE	3.28	79.59	63.97								
	2W Coin Outward with Operator Screening and Blocking: 900/976, 1+DDD, 011+, and Local (NC)			UEPCO	UEPCL	3.28	79.59	63.97								
	2W 2-Way Smartline with 900/976 (all states except LA)			UEPCO	UEPCK	3.28	79.59	63.97								
	2W Coin Outward Smartline with 900/976 (all states except LA)			UEPCO	UEPCR	3.28	79.59	63.97								
	ADDITIONAL UNE COIN PORT/LOOP (RC)															
	UNE Coin Port/Loop Combo Usage (Flat Rate)			UEPCO	URECU	3.70	0.00	0.00	0.00	0.00						
	NONRECURRING CHARGES - CURRENTLY COMBINED															
	2W VG Loop/Line Port Combination -Conversion-Switch-as-is			UEPCO	USAC2		2.77	0.40								
	2W VG Loop/Line Port Combination -Conversion-Switch with change			UEPCO	USACC		2.77	0.40								
	2W VG Loop/Line Port Combination -Conversion-Subsequent Database Update						1.42									
	ADDITIONAL NRCs															
	2W VG Loop/Line Port Combination-Subsequent Activity			UEPCO	USAS2		0.00	0.00								
	Unbundled Misc Rate Element, Tag Loop at End User Premise			UEPCO	URETL		8.33	0.83								
	2-WIRE VOICE LOOP/ 2WIRE VOICE GRADE IO TRANSPORT/ 2-WIRE LINE PORT (RES)															
	UNE Port/Loop Combination Rates															
	2W VG Loop/IO Tranport/Port Combo-Zone 1					18.16										
	2W VG Loop/IO Tranport/Port Combo-Zone 2					29.12										
	2W VG Loop/IO Tranport/Port Combo-Zone 3					44.00										
	UNE Loop Rates															
	2W VG Loop (SL2)-Zone 1		1	UEPFR	UECF2	14.97										
	2W VG Loop (SL2)-Zone 2		2	UEPFR	UECF2	25.93										
	2W VG Loop (SL2)-Zone 3		3	UEPFR	UECF2	40.81										
	2-Wire Voice Grade Line Port Rates (Res)															
	2W voice unbundled port-residence			UEPFR	UEPRL	3.19	225.00	225.00								
	2W voice unbundled port with Caller ID-res			UEPFR	UEPRC	3.19	225.00	225.00								
	2W voice unbundled port outgoing only-res			UEPFR	UEPRO	3.19	225.00	225.00								
	2W voice unbundles res, low usage line port with Caller ID (LUM)			UEPFR	UEPAP	3.19	225.00	225.00								
	2W voice res, low usage line port w/o Caller ID capabilty			UEPFR	UEPRZ	3.19	225.00	225.00								
	2W voice NC port w/o Caller ID capability-res			UEPFR	UEPRZ	3.19	225.00	225.00								
	2W voice NC port with Caller ID capability-res			UEPFR	UEPRY	3.19	225.00	225.00								
	INTEROFFICE TRANSPORT															
	Interoffice Transport-Dedicated-2W VG-Facility Termination			UEPFR	U1TV2	18.00	140.00	71.00								
	Interoffice Transport-Dedicated-2W VG-Per Mile or Fraction Mile			UEPFR	1L5XX	0.0125										
	FEATURES															
	All Features Offered			UEPFR	UEPVF	3.40	0.00	0.00								
	NONRECURRING CHARGES (NRCs) - CURRENTLY COMBINED															
	2W Loop/Dedicated IO Transport/2W Line Port Combination-Conversion-Switch-as-is			UEPFR	USAC2		9.03	1.87								
	2W Loop/Dedicated IO Transport/2W Line Port Combination-Conversion-Switch-With-Change			UEPFR	USACC		9.03	1.87								
	Unbundled Misc Rate Element, Tag Designed Loop at End User Premise			UEPFR	URETN		11.20	1.10								
	2-WIRE VOICE LOOP/ 2WIRE VOICE GRADE IO TRANSPORT/ 2-WIRE LINE PORT (BUS)															
	UNE Port/Loop Combination Rates															
	2W VG Loop/IO Tranport/Port Combo-Zone 1					18.16										
	2W VG Loop/IO Tranport/Port Combo-Zone 2					29.12										
	2W VG Loop/IO Tranport/Port Combo-Zone 3					44.00										
	UNE Loop Rates															
	2W VG Loop (SL2)-Zone 1		1	UEPFB	UECF2	14.97										
	2W VG Loop (SL2)-Zone 2		2	UEPFB	UECF2	25.93										
	2W VG Loop (SL2)-Zone 3		3	UEPFB	UECF2	40.81										

CATEGORY	RATE ELEMENTS	Interim	Zone	BCS	USOC	RATES($)					Svc Order Submitted Elec per LSR	Svc Order Submitted Manually per LSR	Incremental Charge - Manual Svc Order vs. Electronic-1st	Incremental Charge - Manual Svc Order vs. Electronic-Add'l	Incremental Charge - Manual Svc Order vs. Electronic-Disc 1st	Incremental Charge - Manual Svc Order vs. Electronic-Disc Add'l
							Nonrecurring		NRC Disconnect		OSS Rates($)					
						Rec	First	Add'l	First	Add'l	SOMEC	SOMAN	SOMAN	SOMAN	SOMAN	SOMAN
	2-Wire Voice Grade Line Port (Bus)															
	2W voice unbundled port w/o Caller ID-bus			UEPFB	UEPBL	3.19	225.00	225.00								
	2W voice unbundled port with Caller + E484 ID-bus			UEPFB	UEPBC	3.19	225.00	225.00								
	2W voice unbundled port outgoing only-bus			UEPFB	UEPBO	3.19	225.00	225.00								
	2W voice unbundled incoming only port with Caller ID-Bus			UEPFB	UEPB1	3.19	225.00	225.00								
	INTEROFFICE TRANSPORT															
	Interoffice Transport-Dedicated-2W VG-Facility Termination			UEPFB	U1TV2	18.00	140.00	71.00								
	Interoffice Transport-Dedicated-2W VG-Per Mile or Fraction Mile			UEPFB	1L5XX	0.0125										
	FEATURES															
	All Features Offered			UEPFB	UEPVF	3.40	0.00	0.00								
	NONRECURRING CHARGES (NRCs) - CURRENTLY COMBINED															
	2W Loop/Dedicated IO Transport/2W Line Port Combination-Conversion-Switch-as-is			UEPFB	USAC2		9.03	1.87								
	2W Loop/Dedicated IO Transport/2W Line Port Combination-Conversion-Switch with change			UEPFB	USACC		9.03	1.87								
	Unbundled Misc Rate Element, Tag Designed Loop at End User Premise			UEPFB	URETN		11.20	1.10								
	2-WIRE VOICE LOOP/ 2WIRE VOICE GRADE IO TRANSPORT/ 2-WIRE LINE PORT (PBX)															
	UNE Port/Loop Combination Rates															
	2W VG Loop/IO Tranport/Port Combo-Zone 1					18.16										
	2W VG Loop/IO Tranport/Port Combo-Zone 2					29.12										
	2W VG Loop/IO Tranport/Port Combo-Zone 3					44.00										
	UNE Loop Rates															
	2W VG Loop (SL2)-Zone 1		1	UEPFP	UECF2	14.97										
	2W VG Loop (SL2)-Zone 2		2	UEPFP	UECF2	25.93										
	2W VG Loop (SL2)-Zone 3		3	UEPFP	UECF2	40.81										
	2-Wire Voice Grade Line Port Rates (BUS - PBX)															
	Line Side Unbundled Combination 2-Way PBX Trunk Port-Bus			UEPFP	UEPPC	3.18	225.00	225.00								
	Line Side Unbundled Outward PBX Trunk Port-Bus			UEPFP	UEPPO	3.18	225.00	225.00								
	Line Side Unbundled Incoming PBX Trunk Port-Bus			UEPFP	UEPP1	3.18	225.00	225.00								
	2W Voice Unbundled PBX LD Terminal Ports			UEPFP	UEPLD	3.18	225.00	225.00								
	2W Voice Unbundled 2-Way Combination PBX Usage Port			UEPFP	UEPXA	3.18	225.00	225.00								
	2W Voice Unbundled PBX Toll Terminal Hotel Ports			UEPFP	UEPXB	3.18	225.00	225.00								
	2W Voice Unbundled PBX LD DDD Terminals Port			UEPFP	UEPXC	3.18	225.00	225.00								
	2W Voice Unbundled PBX LD Terminal Switchboard Port			UEPFP	UEPXD	3.18	225.00	225.00								
	2W Voice Unbundled PBX LD Terminal Switchboard IDD Capable Port			UEPFP	UEPXE	3.18	225.00	225.00								
	2W Voice Unbundled 2-Way PBX Hotel/Hospital Economy Administrative Calling Port			UEPFP	UEPXL	3.18	225.00	225.00								
	2W Voice Unbundled 2-Way PBX Hotel/Hospital Economy Rm Calling Port			UEPFP	UEPXM	3.18	225.00	225.00								
	2W Voice Unbundled 1-Way Outgoing PBX Hotel/Hospital Discount Rm Calling Port			UEPFP	UEPXO	3.18	225.00	225.00								
	2W Voice Unbundled 1-Way Outgoing PBX Measured Port			UEPFP	UEPXS	3.18	225.00	225.00								
	INTEROFFICE TRANSPORT															
	Interoffice Transport-Dedicated-2W VG-Facility Termination			UEPFP	U1TV2	18.00	140.00	71.00								
	Interoffice Transport-Dedicated-2W VG-Per Mile or Fraction Mile			UEPFP	1L5XX	0.0125										
	FEATURES															
	All Features Offered			UEPFP	UEPVF	3.40	0.00	0.00								
	NONRECURRING CHARGES (NRCs) - CURRENTLY COMBINED															
	2W Loop/Dedicated IO Transport/2W Line Port Combination-Conversion-Switch-as-is			UEPFP	USAC2		9.03	1.87								
	2W Loop/Dedicated IO Transport/2W Line Port Combination-Conversion-Switch with change			UEPFP	USACC		9.03	1.87								
	Unbundled Misc Rate Element, Tag Designed Loop at End User Premise			UEPFP	URETN		11.20	1.10								
	2-WIRE VOICE GRADE LOOP- BUS ONLY - WITH 2-WIRE DID TRUNK PORT															
	UNE Port/Loop Combination Rates															
	2W VG Loop/2W DID Trunk Port Combo-UNE Zone 1					21.97										

UNBUNDLED NETWORK ELEMENTS - North Carolina														Attachment: 2 Exh A			
CATEGORY	RATE ELEMENTS	Interim	Zone	BCS	USOC	RATES($)					Svc Order Submitted Elec per LSR	Svc Order Submitted Manually per LSR	Incremental Charge - Manual Svc Order vs. Electronic-1st	Incremental Charge - Manual Svc Order vs. Electronic-Add'l	Incremental Charge - Manual Svc Order vs. Electronic-Disc 1st	Incremental Charge - Manual Svc Order vs. Electronic-Disc Add'l
							Nonrecurring		NRC Disconnect		OSS Rates($)					
						Rec	First	Add'l	First	Add'l	SOMEC	SOMAN	SOMAN	SOMAN	SOMAN	SOMAN
	2W VG Loop/2W DID Trunk Port Combo-UNE Zone 2					28.80										
	2W VG Loop/2W DID Trunk Port Combo-UNE Zone 3					38.08										
UNE Loop Rates																
	2W Analog VG Loop- (SL2)-UNE Zone 1		1	UEPPX	UECD1	8.85										
	2W Analog VG Loop- (SL2)-UNE Zone 2		2	UEPPX	UECD1	15.68										
	2W Analog VG Loop- (SL2)-UNE Zone 3		3	UEPPX	UECD1	24.96										
UNE Port Rate																
	Exchange Ports-2W DID Port			UEPPX	UEPD1	13.12	224.81	188.40								
NONRECURRING CHARGES - CURRENTLY COMBINED																
	2W VG Loop/2W DID Trunk Port Combination -Switch-as-is			UEPPX	USAC1		13.26	8.39								
	2W VG Loop/2W DID Trunk Port Conversion with BellSouth Allowable Changes			UEPPX	USA1C		13.26	8.39								
ADDITIONAL NRCs																
	2W DID Subsequent Activity-Add Trunks, Per Trunk			UEPPX	USAS1		53.49									
	Unbundled Misc Rate Element, Tag Designed Loop at End User Premise			UEPPX	URETN		11.20	1.10								
Telephone Number/Trunk Group Establisment Charges																
	DID Trunk Termination (One Per Port)			UEPPX	NDT	0.00	0.00	0.00								
	DID Numbers, Establish Trunk Group and Provide First Group of 20 DID Numbers			UEPPX	NDZ	0.00	0.00	0.00								
	Additional DID Numbers for each Group of 20 DID Numbers			UEPPX	ND4	0.00	0.00	0.00								
	DID Numbers, Non- consecutive DID Numbers , Per Number			UEPPX	ND5	0.00	0.00	0.00								
	Reserve Non-Consecutive DID numbers			UEPPX	ND6	0.00	0.00	0.00								
	Reserve DID Numbers			UEPPX	NDV	0.00	0.00	0.00								
2-WIRE ISDN DIGITAL GRADE LOOP WITH 2-WIRE ISDN DIGITAL LINE SIDE PORT																
UNE Port/Loop Combination Rates																
	2W ISDN Digital Grade Loop/2W ISDN Digital Line Side Port -UNE Zone 1					39.84										
	2W ISDN Digital Grade Loop/2W ISDN Digital Line Side Port -UNE Zone 2					51.01										
	2W ISDN Digital Grade Loop/2W ISDN Digital Line Side Port -UNE Zone 3					66.18										
UNE Loop Rates																
	2W ISDN Digital Grade Loop-UNE Zone 1		1	UEPPB UEPPR	USL2X	14.47										
	2W ISDN Digital Grade Loop-UNE Zone 2		2	UEPPB UEPPR	USL2X	25.64										
	2W ISDN Digital Grade Loop-UNE Zone 3		3	UEPPB UEPPR	USL2X	40.81										
UNE Port Rate																
	Exchange Port-2W ISDN Line Side Port			UEPPR	UEPPR	25.37	388.20	302.77								
	Exchange Port-2W ISDN Line Side Port			UEPPB	UEPPB	25.37	388.20	302.77								
NONRECURRING CHARGES - CURRENTLY COMBINED																
	2W ISDN Digital Grade Loop/2W ISDN Line Side Port Combination-Conversion			UEPPB UEPPR	USACB	0.00	174.35	174.35								
ADDITIONAL NRCs																
	Unbundled Misc Rate Element, Tag Designed Loop at End User Premise			UEPPB UEPPR	URETN		11.20	1.10								
	Unbundled Misc Rate Element, Tag Loop at End User Premise			UEPPB UEPPR	URETL		8.33	0.83								
B-CHANNEL USER PROFILE ACCESS:																
	CVS/CSD (DMS/5ESS)			UEPPB UEPPR	U1UCA	0.00	0.00	0.00								
	CVS (EWSD)			UEPPB UEPPR	U1UCB	0.00	0.00	0.00								
	CSD			UEPPB UEPPR	U1UCC	0.00	0.00	0.00								
B-CHANNEL AREA PLUS USER PROFILE ACCESS: (AL,KY,LA,MS SC,MS, & TN)																
USER TERMINAL PROFILE																
	User Terminal Profile (EWSD only)			UEPPB UEPPR	U1UMA	0.00	0.00	0.00								
VERTICAL FEATURES																
	All Vertical Features-One per Channel B User Profile			UEPPB UEPPR	UEPVF	3.40	0.00	0.00								
INTEROFFICE CHANNEL MILEAGE																
	Interoffice Channel mileage each, including first mile and facilities termination			UEPPB UEPPR	M1GNC	18.0282	137.48	52.58								

UNBUNDLED NETWORK ELEMENTS - North Carolina														Attachment: 2 Exh A			
CATEGORY		RATE ELEMENTS	Interim	Zone	BCS	USOC	RATES($)					Svc Order Submitted Elec per LSR	Svc Order Submitted Manually per LSR	Incremental Charge - Manual Svc Order vs. Electronic-1st	Incremental Charge - Manual Svc Order vs. Electronic-Add'l	Incremental Charge - Manual Svc Order vs. Electronic-Disc 1st	Incremental Charge - Manual Svc Order vs. Electronic-Disc Add'l
								Nonrecurring		NRC Disconnect		OSS Rates($)					
							Rec	First	Add'l	First	Add'l	SOMEC	SOMAN	SOMAN	SOMAN	SOMAN	SOMAN
		Interoffice Channel mileage each, additional mile			UEPPB UEPPR	M1GNM	0.0282	0.00	0.00								
UNBUNDLED CENTREX PORT/LOOP COMBINATIONS - COST BASED RATES																	
	UNE-P CENTREX - 5ESS (Valid in All States)																
	2-Wire VG Loop/2-Wire Voice Grade Port (Centrex) Combo																
	UNE Port/Loop Combination Rates (Non-Design)																
		2W VG Loop/2W VG Port (Centrex) Port Combo-Non-Design					14.03										
		2W VG Loop/2W VG Port (Centrex)Port Combo-Non-Design					22.33										
		2W VG Loop/2W VG Port (Centrex)Port Combo-Non-Design					33.61										
	UNE Port/Loop Combination Rates (Design)																
		2W VG Loop/2W VG Port (Centrex) Port Combo-Design					18.25										
		2W VG Loop/2W VG Port (Centrex)Port Combo-Design					29.21										
		2W VG Loop/2W VG Port (Centrex)Port Combo-Design					44.09										
	UNE Loop Rate																
		2W VG Loop (SL 1)-Zone 1		1	UEP95	UECS1	10.75										
		2W VG Loop (SL 1)-Zone 2		2	UEP95	UECS1	19.05										
		2W VG Loop (SL 1)-Zone 3		3	UEP95	UECS1	30.33										
		2W VG Loop (SL 2)-Zone 1		1	UEP95	UECS2	14.97										
		2W VG Loop (SL 2)-Zone 2		2	UEP95	UECS2	25.93										
		2W VG Loop (SL 2)-Zone 3		3	UEP95	UECS2	40.81										
	UNE Port Rate																
	All States																
		2W VG Port (Centrex) Basic Local Area			UEP95	UEPYA	3.28	79.59	63.97								
		2W VG Port (Centrex 800 termination)			UEP95	UEPYB	3.28	79.59	63.97								
		2W VG Port (Centrex with Caller ID)1Basic Local Area			UEP95	UEPYH	3.28	79.59	63.97								
		2W VG Port (Centrex from diff SWC)2,3 Basic Local Area			UEP95	UEPYM	3.28	164.57	128.16								
		2W VG Port, Diff SWC 2,3-800 Service Term-Basic Local Area			UEP95	UEPYZ	3.28										
		2W VG Port terminated in on Megalink or equivalent-Basic Local Area			UEP95	UEPY9	3.28	79.59	63.97								
		2W VG Port Terminated on 800 Service Term-Basic Local Area			UEP95	UEPY2	3.28	79.59	63.97								
	NC Only																
		2W VG Port (Centrex)			UEP95	UEPUA	3.28	79.59	63.97								
		2W VG Port (Centrex 800 termination)			UEP95	UEPUB	3.28	79.59	63.97								
		2W VG Port (Centrex with Caller ID)1			UEP95	UEPUH	3.28	79.59	63.97								
		2W VG Port (Centrex from diff SWC)2,3			UEP95	UEPUM	3.28	164.57	128.16								
		2W VG Port, Diff SWC-800 Service Term 2,3			UEP95	UEPUZ	3.28	164.57	128.16								
		2W VG Port terminated in on Megalink or equivalent			UEP95	UEPU9	3.28	79.59	63.97								
		2W VG Port Terminated on 800 Service Term			UEP95	UEPU2	3.28	79.59	63.97								
	Local Switching																
		Centrex Intercom Funtionality, per port			UEP95	URECS	0.903										
	Features																
		All Standard Features Offered, per port			UEP95	UEPVF	3.40										
		All Select Features Offered, per port			UEP95	UEPVS	0.00	457.83									
		All Centrex Control Features Offered, per port			UEP95	UEPVC	3.40										
	NARS																
		Unbundled Network Access Register-Combination			UEP95	UARCX	0.00	0.00	0.00	0.00	0.00						
		Unbundled Network Access Register-Indial			UEP95	UAR1X	0.00	0.00	0.00	0.00	0.00						
		Unbundled Network Access Register-Outdial			UEP95	UAROX	0.00	0.00	0.00	0.00	0.00						
	Misc Terminations																
	2-Wire Trunk Side																
		Trunk Side Terminations, each			UEP95	CEND6	12.36										
	4-Wire Digital (1.544 Megabits)																
		DS1 Circuit Terminations, each			UEP95	M1HD1	123.65										
		DS0 Channels Activated, each			UEP95	M1HDO	0.00	28.81									
	Interoffice Channel Mileage - 2-Wire																
		Interoffice Channel Facilities Termination			UEP95	M1GBC	18.00										
		Interoffice Channel mileage, per mile or fraction of mile			UEP95	M1GBM	0.0282										
	Feature Activations (DS0) Centrex Loops on Channelized DS1 Service																
	D4 Channel Bank Feature Activations																
		Feature Activation on D-4 Channel Bank Centrex Loop Slot			UEP95	1PQWS	0.65										

CATEGORY	RATE ELEMENTS	Interim	Zone	BCS	USOC	RATES($)					Svc Order Submitted Elec per LSR	Svc Order Submitted Manually per LSR	Incremental Charge - Manual Svc Order vs. Electronic-1st	Incremental Charge - Manual Svc Order vs. Electronic-Add'l	Incremental Charge - Manual Svc Order vs. Electronic-Disc 1st	Incremental Charge - Manual Svc Order vs. Electronic-Disc Add'l
							Nonrecurring		NRC Disconnect		OSS Rates($)					
						Rec	First	Add'l	First	Add'l	SOMEC	SOMAN	SOMAN	SOMAN	SOMAN	SOMAN
	Feature Activation on D-4 Channel Bank FX line Side Loop Slot			UEP95	1PQW6	0.65										
	Feature Activation on D-4 Channel Bank FX Trunk Side Loop Slot			UEP95	1PQW7	0.65										
	Feature Activation on D-4 Channel Bank Centrex Loop Slot-Different WC			UEP95	1PQWP	0.65										
	Feature Activation on D-4 Channel Bank Private Line Loop Slot			UEP95	1PQWV	0.65										
	Feature Activation on D-4 Channel Bank Tjie Line/Trunk Loop Slot			UEP95	1PQWQ	0.65										
	Feature Activation on D-4 Channel Bank WATS Loop Slot			UEP95	1PQWA	0.65										
	Non-Recurring Charges (NRC) Associated with UNE-P Centrex															
	NRC Conversion Currently Combined Switch-As-Is with allowed changes, per port			UEP95	USAC2		2.77	0.40								
	New Centrex Standard Common Block			UEP95	M1ACS	0.00	695.11									
	New Centrex Customized Common Block			UEP95	M1ACC	0.00	695.11									
	NAR Establishment Charge, Per Occasion			UEP95	URECA	0.00	72.73									
	Additional Non-Recurring Charges (NRC)															
	Unbundled Misc Rate Element, Tag Loop at End Use Premise			UEP95	URETL		8.33	0.83								
	Unbundled Misc Rate Element, Tag Design Loop at End Use Premise			UEP95	URETN		11.20	1.10								
	UNE-P CENTREX - DMS100 (Valid in All States)															
	2-Wire VG Loop/2-Wire Voice Grade Port (Centrex) Combo															
	UNE Port/Loop Combination Rates (Non-Design)															
	2W VG Loop/2W VG Port (Centrex) Port Combo-Non-Design					14.03										
	2W VG Loop/2W VG Port (Centrex)Port Combo-Non-Design					22.33										
	2W VG Loop/2W VG Port (Centrex)Port Combo-Non-Design					33.61										
	UNE Port/Loop Combination Rates (Design)															
	2W VG Loop/2W VG Port (Centrex) Port Combo-Design					18.25										
	2W VG Loop/2W VG Port (Centrex)Port Combo-Design					29.21										
	2W VG Loop/2W VG Port (Centrex)Port Combo-Design					44.09										
	UNE Loop Rate															
	2W VG Loop (SL 1)-Zone 1		1	UEP9D	UECS1	10.75										
	2W VG Loop (SL 1)-Zone 2		2	UEP9D	UECS1	19.05										
	2W VG Loop (SL 1)-Zone 3		3	UEP9D	UECS1	30.33										
	2W VG Loop (SL 2)-Zone 1		1	UEP9D	UECS2	14.97										
	2W VG Loop (SL 2)-Zone 2		2	UEP9D	UECS2	25.93										
	2W VG Loop (SL 2)-Zone 3		3	UEP9D	UECS2	40.81										
	UNE Port Rate															
	ALL STATES															
	2W VG Port (Centrex) Basic Local Area			UEP9D	UEPYA	3.28	79.59	63.97								
	2W VG Port (Centrex 800 termination)Basic Local Area			UEP9D	UEPYB	3.28	79.59	63.97								
	2W VG Port (Centrex/EBS-PSET)3Basic Local Area			UEP9D	UEPYC	3.28	79.59	63.97								
	2W VG Port (Centrex /EBS-M5009)3Basic Local Area			UEP9D	UEPYD	3.28	79.59	63.97								
	2W VG Port (Centrex /EBS-M5209))3 Basic Local Area			UEP9D	UEPYE	3.28	79.59	63.97								
	2W VG Port (Centrex /EBS-M5112))3 Basic Local Area			UEP9D	UEPYF	3.28	79.59	63.97								
	2W VG Port (Centrex /EBS-M5312))3Basic Local Area			UEP9D	UEPYG	3.28	79.59	63.97								
	2W VG Port (Centrex /EBS-M5008))3 Basic Local Area			UEP9D	UEPYT	3.28	79.59	63.97								
	2W VG Port (Centrex/EBS-M5208))3 Basic Local Area			UEP9D	UEPYU	3.28	79.59	63.97								
	2W VG Port (Centrex/EBS-M5216))3 Basic Local Area			UEP9D	UEPYV	3.28	79.59	63.97								
	2W VG Port (Centrex/EBS-M5316))3 Basic Local Area			UEP9D	UEPY3	3.28	79.59	63.97								
	2W VG Port (Centrex with Caller ID) Basic Local Area			UEP9D	UEPYH	3.28	79.59	63.97								
	2W VG Port (Centrex/Caller ID/Msg Wtg Lamp Indication))4 Basic Local Area			UEP9D	UEPYW	3.28	79.59	63.97								
	2W VG Port (Centrex/Msg Wtg Lamp Indication))4 Basic Local Area			UEP9D	UEPYJ	3.28	79.59	63.97								
	2W VG Port (Centrex from diff SWC) 2,3-Basic Local Area			UEP9D	UEPYM	3.28	164.57	128.16								
	2W VG Port (Centrex/differ SWC /EBS-PSET)2,3,4 Basic Local Area			UEP9D	UEPYO	3.28	164.57	128.16								
	2W VG Port (Centrex/differ SWC /EBS-M5009)2,3,4 Basic Local Area			UEP9D	UEPYP	3.28	164.57	128.16								
	2W VG Port (Centrex/differ SWC /EBS-5209)2,3,4 Basic Local Area			UEP9D	UEPYQ	3.28	164.57	128.16								
	2W VG Port (Centrex/differ SWC /EBS-M5112)2,3,4 Basic Local Area			UEP9D	UEPYR	3.28	164.57	128.16								

CATEGORY	RATE ELEMENTS	Interim	Zone	BCS	USOC	RATES($)					Svc Order Submitted Elec per LSR	Svc Order Submitted Manually per LSR	Incremental Charge - Manual Svc Order vs. Electronic-1st	Incremental Charge - Manual Svc Order vs. Electronic-Add'l	Incremental Charge - Manual Svc Order vs. Electronic-Disc 1st	Incremental Charge - Manual Svc Order vs. Electronic-Disc Add'l
							Nonrecurring		NRC Disconnect		OSS Rates($)					
						Rec	First	Add'l	First	Add'l	SOMEC	SOMAN	SOMAN	SOMAN	SOMAN	SOMAN
	2W VG Port (Centrex/differ SWC /EBS-M5312)2,3,4 Basic Local Area			UEP9D	UEPYS	3.28	164.57	128.16								
	2W VG Port (Centrex/differ SWC /EBS-M5008)2,3,4 Basic Local Area			UEP9D	UEPY4	3.28	164.57	128.16								
	2W VG Port (Centrex/differ SWC /EBS-M5208)2, 3 Basic Local Area			UEP9D	UEPY5	3.28	164.57	128.16								
	2W VG Port (Centrex/differ SWC /EBS-M5216)2,3,4 Basic Local Area			UEP9D	UEPY6	3.28	164.57	128.16								
	2W VG Port (Centrex/differ SWC /EBS-M5316)2,3,4 Basic Local Area			UEP9D	UEPY7	3.28	164.57	128.16								
	2W VG Port, Diff SWC-800 Service Term 2,3			UEP9D	UEPYZ	3.28	164.57	128.16								
	2W VG Port terminated in on Megalink or equivalent Basic Local Area			UEP9D	UEPY9	3.28	79.59	63.97								
	2W VG Port Terminated on 800 Service Term Basic Local Area			UEP9D	UEPY2	3.28	79.59	63.97								
NC Only																
	2W VG Port (Centrex)			UEP9D	UEPUA	3.28	79.59	63.97								
	2W VG Port (Centrex 800 termination)			UEP9D	UEPUB	3.28	79.59	63.97								
	2W VG Port (Centrex/EBS-PSET)4			UEP9D	UEPUC	3.28	79.59	63.97								
	2W VG Port (Centrex /EBS-M5009)4			UEP9D	UEPUD	3.28	79.59	63.97								
	2W VG Port (Centrex /EBS-M5209)4			UEP9D	UEPUE	3.28	79.59	63.97								
	2W VG Port (Centrex /EBS-M5112)4			UEP9D	UEPUF	3.28	79.59	63.97								
	2W VG Port (Centrex /EBS-M5312)4			UEP9D	UEPUG	3.28	79.59	63.97								
	2W VG Port (Centrex /EBS-M5008)4			UEP9D	UEPUT	3.28	79.59	63.97								
	2W VG Port (Centrex/EBS-M5208)4			UEP9D	UEPUU	3.28	79.59	63.97								
	2W VG Port (Centrex/EBS-M5216)4			UEP9D	UEPUV	3.28	79.59	63.97								
	2W VG Port (Centrex/EBS-M5316)4			UEP9D	UEPU3	3.28	79.59	63.97								
	2W VG Port (Centrex with Caller ID)			UEP9D	UEPUH	3.28	79.59	63.97								
	2W VG Port (Centrex/Caller ID/Msg Wtg Lamp Indication)4			UEP9D	UEPUW	3.28	79.59	63.97								
	2W VG Port (Centrex/Msg Wtg Lamp Indication)4			UEP9D	UEPUJ	3.28	79.59	63.97								
	2W VG Port (Centrex from diff SWC) 2,3			UEP9D	UEPUM	3.28	164.57	128.16								
	2W VG Port (Centrex/differ SWC /EBS-PSET)2,3,4			UEP9D	UEPUO	3.28	164.57	128.16								
	2W VG Port (Centrex/differ SWC /EBS-M5009)2,3,4			UEP9D	UEPUP	3.28	164.57	128.16								
	2W VG Port (Centrex/differ SWC /EBS-5209)2,3,4			UEP9D	UEPUQ	3.28	164.57	128.16								
	2W VG Port (Centrex/differ SWC /EBS-M5112)2,3,4			UEP9D	UEPUR	3.28	164.57	128.16								
	2W VG Port (Centrex/differ SWC /EBS-M5312)2,3,4			UEP9D	UEPUS	3.28	164.57	128.16								
	2W VG Port (Centrex/differ SWC /EBS-M5008)2,3,4			UEP9D	UEPU4	3.28	164.57	128.16								
	2W VG Port (Centrex/differ SWC /EBS-M5208)2,3,4			UEP9D	UEPU5	3.28	164.57	128.16								
	2W VG Port (Centrex/differ SWC /EBS-M5216)2,3,4			UEP9D	UEPU6	3.28	164.57	128.16								
	2W VG Port (Centrex/differ SWC /EBS-M5316)2,3,4			UEP9D	UEPU7	3.28	164.57	128.16								
	2W VG Port, Diff SWC-800 Service Term 2,3			UEP9D	UEPUZ	3.28	164.57	128.16								
	2W VG Port terminated in on Megalink or equivalent			UEP9D	UEPU9	3.28	79.59	63.97								
	2W VG Port Terminated on 800 Service Term			UEP9D	UEPU2	3.28	79.59	63.97								
Local Switching																
	Centrex Intercom Funtionality, per port			UEP9D	URECS	0.903										
Features																
	All Standard Features Offered, per port			UEP9D	UEPVF	3.40										
	All Select Features Offered, per port			UEP9D	UEPVS	0.00	457.83									
	All Centrex Control Features Offered, per port			UEP9D	UEPVC	3.40										
NARS																
	Unbundled Network Access Register-Combination			UEP9D	UARCX	0.00	0.00	0.00	0.00	0.00						
	Unbundled Network Access Register-Inward			UEP9D	UAR1X	0.00	0.00	0.00	0.00	0.00						
	Unbundled Network Access Register-Outdial			UEP9D	UAROX	0.00	0.00	0.00	0.00	0.00						
Misc Terminations																
2-Wire Trunk Side																
	Trunk Side Terminations, each			UEP9D	CEND6	12.36										
4-Wire Digital (1.544 Megabits)																
	DS1 Circuit Terminations, each			UEP9D	M1HD1	123.65										
	DS0 Channels Activiated per Channel			UEP9D	M1HDO	0.00	28.81									
Interoffice Channel Mileage - 2-Wire																
	Interoffice Channel Facilities Termination			UEP9D	M1GBC	18.00										

UNBUNDLED NETWORK ELEMENTS - North Carolina														Attachment: 2 Exh A			
CATEGORY	RATE ELEMENTS	Interim	Zone	BCS	USOC	RATES($)					Svc Order Submitted Elec per LSR	Svc Order Submitted Manually per LSR	Incremental Charge - Manual Svc Order vs. Electronic-1st	Incremental Charge - Manual Svc Order vs. Electronic-Add'l	Incremental Charge - Manual Svc Order vs. Electronic-Disc 1st	Incremental Charge - Manual Svc Order vs. Electronic-Disc Add'l
							Nonrecurring		NRC Disconnect		OSS Rates($)					
						Rec	First	Add'l	First	Add'l	SOMEC	SOMAN	SOMAN	SOMAN	SOMAN	SOMAN
	Interoffice Channel mileage, per mile or fraction of mile			UEP9D	M1GBM	0.0282										
	Feature Activations (DS0) Centrex Loops on Channelized DS1 Service															
	D4 Channel Bank Feature Activations															
	Feature Activation on D-4 Channel Bank Centrex Loop Slot			UEP9D	1PQWS	0.65										
	Feature Activation on D-4 Channel Bank FX line Side Loop Slot			UEP9D	1PQW6	0.65										
	Feature Activation on D-4 Channel Bank FX Trunk Side Loop Slot			UEP9D	1PQW7	0.65										
	Feature Activation on D-4 Channel Bank Centrex Loop Slot-Different WC			UEP9D	1PQWP	0.65										
	Feature Activation on D-4 Channel Bank Private Line Loop Slot			UEP9D	1PQWV	0.65										
	Feature Activation on D-4 Channel Bank Tjie Line/Trunk Loop Slot			UEP9D	1PQWQ	0.65										
	Feature Activation on D-4 Channel Bank WATS Loop Slot			UEP9D	1PQWA	0.65										
	Non-Recurring Charges (NRC) Associated with UNE-P Centrex															
	NRC Conversion Currently Combined Switch-As-Is with allowed changes, per port			UEP9D	USAC2		2.77	0.40								
	New Centrex Standard Common Block			UEP9D	M1ACS	0.00	695.11									
	New Centrex Customized Common Block			UEP9D	M1ACC	0.00	695.11									
	NAR Establishment Charge, Per Occasion			UEP9D	URECA	0.00	72.73									
	Additional Non-Recurring Charges (NRC)															
	Unbundled Misc Rate Element, Tag Loop at End Use Premise			UEP9D	URETL		8.33	0.83								
	Unbundled Misc Rate Element, Tag Design Loop at End Use Premise			UEP9D	URETN		11.20	1.10								
	Note 1 - Required Port for Centrex Control in 1AESS, 5ESS & EWSD															
	Note 2 - Requres Interoffice Channel Mileage															
	Note 3 - Installation is combination of Installation charge for SL2 Loop and Port															
	Note 4 - Requires Specific Customer Premises Equipment															
	Note: Rates displaying an "I" in Interim column are interim as a result of a Commission order.															

UNBUNDLED NETWORK ELEMENTS - South Carolina														Attachment: 2 Exh A			
CATEGORY	RATE ELEMENTS	Interim	Zone	BCS	USOC	RATES($)					Svc Order Submitted Elec per LSR	Svc Order Submitted Manually per LSR	Incremental Charge - Manual Svc Order vs. Electronic-1st	Incremental Charge - Manual Svc Order vs. Electronic-Add'l	Incremental Charge - Manual Svc Order vs. Electronic-Disc 1st	Incremental Charge - Manual Svc Order vs. Electronic-Disc Add'l
							Nonrecurring		NRC Disconnect		OSS Rates($)					
						Rec	First	Add'l	First	Add'l	SOMEC	SOMAN	SOMAN	SOMAN	SOMAN	SOMAN
	The "Zone" shown in the sections for stand-alone loops or loops as part of a combination refers to Geographically Deaveraged UNE Zones. To view Geographically Deaveraged UNE Zone Designations by Central Office, refer to internet Website: http://www.interconnection.bellsouth.com/become_a_clec/html/interconnection.htm															
OPERATIONS SUPPORT SYSTEMS (OSS) - "REGIONAL RATES"																
	NOTE: (1) CLEC should contact its contract negotiator if it prefers the "state specific" OSS charges as ordered by the State Commissions. The OSS charges currently contained in this rate exhibit are the BellSouth "regional" service ordering charges. CLEC may elect either the state specific Commission ordered rates for the service ordering charges, or CLEC may elect the regional service ordering charge, however, CLEC can not obtain a mixture of the two regardless if CLEC has a interconnection contract															
	NOTE: (2) Any element that can be ordered electronically will be billed according to the SOMEC rate listed in this category. Please refer to BellSouth's Local Ordering Handbook (LOH) to determine if a product can be ordered electronically. For those elements that cannot be ordered electronically at present per the LOH, the listed SOMEC rate in this category reflects the charge that would be billed to a CLEC once electronic ordering capabilities come on-line for that element. Otherwise, the manual ordering charge,															
	OSS-Electronic Service Order Charge, Per Local Service Request (LSR)-UNE Only				SOMEC		3.50	0.00	3.50	0.00						
	OSS-Manual Service Order Charge, Per Local Service Request (LSR)-UNE Only				SOMAN		15.69	0.00	1.97	0.00						
UNE SERVICE DATE ADVANCEMENT CHARGE																
	NOTE: The Expedite charge will be maintained commensurate with BellSouth's FCC No.1 Tariff, Section 5 as applicable.															
	UNE Expedite Charge per Circuit or Line Assignable USOC, per Day			UAL, UEANL, UCL, UEF, UDF, UEQ, UDL, UENTW, UDN, UEA, UHL, ULC, USL, U1T12, U1T48, U1TD1, U1TD3, U1TDX, U1TO3, U1TS1, U1TVX, UC1BC, UC1BL, UC1CC, UC1CL, UC1DC, UC1DL, UC1EC, UC1EL, UC1FC, UC1FL, UC1GC, UC1GL, UC1HC, UC1HL, UDL12, UDL48, UDLO3, UDLSX, UE3, ULD12, ULD48, ULDD1, ULDD3, ULDDX, ULDO3, ULDS1, ULDVX, UNC1X, UNC3X, UNCDX, UNCNX, UNCSX, UNCVX, UNLD1, UNLD3, UXTD1, UXTD3, UXTS1, U1TUC, U1TUD, U1TUB, U1TUA,NTCVG, NTCUD, NTCD1	SDASP		200.00									
ORDER MODIFICATION CHARGE																
	Order Modification Charge (OMC)						26.21	0.00	0.00	0.00						
	Order Modification Additional Dispatch Charge (OMCAD)						150.00	0.00	0.00	0.00						
UNBUNDLED EXCHANGE ACCESS LOOP																
	2-WIRE ANALOG VOICE GRADE LOOP															
	2W Analog VG Loop- SL2 w/Loop or Ground Start Signaling-Zone 1		1	UEA	UEAL2	16.68	105.98	68.43	53.05	10.61						
	2W Analog VG Loop- SL2 w/Loop or Ground Start Signaling-Zone 2		2	UEA	UEAL2	23.13	105.98	68.43	53.05	10.61						
	2W Analog VG Loop- SL2 w/Loop or Ground Start Signaling-Zone 3		3	UEA	UEAL2	28.46	105.98	68.43	53.05	10.61						
	2W Analog VG Loop- SL2 w/Reverse Battery Signaling-Zone 1		1	UEA	UEAR2	16.68	105.98	68.43	53.05	10.61						
	2W Analog VG Loop- SL2 w/Reverse Battery Signaling-Zone 2		2	UEA	UEAR2	23.13	105.98	68.43	53.05	10.61						
	2W Analog VG Loop- SL2 w/Reverse Battery Signaling-Zone 3		3	UEA	UEAR2	28.46	105.98	68.43	53.05	10.61						
	Switch-As-Is Conversion rate per UNE Loop, Single LSR, (per DS0)			UEA	URESL		24.88	3.51								
	Switch-As-Is Conversion rate per UNE Loop, Spreadsheet, (per DS0)			UEA	URESP		26.37	4.99								
	CLEC to CLEC Conversion Charge w/o outside dispatch			UEA	UREWO		87.90	36.44								

CATEGORY	RATE ELEMENTS	Interim	Zone	BCS	USOC	RATES($)					Svc Order Submitted Elec per LSR	Svc Order Submitted Manually per LSR	Incremental Charge - Manual Svc Order vs. Electronic-1st	Incremental Charge - Manual Svc Order vs. Electronic-Add'l	Incremental Charge - Manual Svc Order vs. Electronic-Disc 1st	Incremental Charge - Manual Svc Order vs. Electronic-Disc Add'l
							Nonrecurring		NRC Disconnect		OSS Rates($)					
						Rec	First	Add'l	First	Add'l	SOMEC	SOMAN	SOMAN	SOMAN	SOMAN	SOMAN
	Loop Tagging-SL2 (SL2)			UEA	URETL		11.24	1.10								
4-WIRE ANALOG VOICE GRADE LOOP																
	4W Analog VG Loop-Zone 1		1	UEA	UEAL4	32.59	132.38	94.83	59.35	14.61						
	4W Analog VG Loop-Zone 2		2	UEA	UEAL4	43.89	132.38	94.83	59.35	14.61						
	4W Analog VG Loop-Zone 3		3	UEA	UEAL4	43.38	132.38	94.83	59.35	14.61						
	Switch-As-Is Conversion rate per UNE Loop, Single LSR, (per DS0)			UEA	URESL		24.88	3.51								
	Switch-As-Is Conversion rate per UNE Loop, Spreadsheet, (per DS0)			UEA	URESP		26.37	4.99								
	CLEC to CLEC Conversion Charge w/o outside dispatch			UEA	UREWO		87.90	36.44								
2-WIRE ISDN DIGITAL GRADE LOOP																
	2W ISDN Digital Grade Loop-Zone 1		1	UDN	U1L2X	25.21	117.58	80.03	53.05	10.61						
	2W ISDN Digital Grade Loop-Zone 2		2	UDN	U1L2X	32.76	117.58	80.03	53.05	10.61						
	2W ISDN Digital Grade Loop-Zone 3		3	UDN	U1L2X	37.70	117.58	80.03	53.05	10.61						
	CLEC to CLEC Conversion Charge w/o outside dispatch			UDN	UREWO		91.82	44.25								
2-WIRE ASYMMETRICAL DIGITAL SUBSCRIBER LINE (ADSL) COMPATIBLE LOOP																
	2W Unbundled ADSL Loop including manual service inquiry & facility reservation-Zone 1		1	UAL	UAL2X	12.19	120.84	70.56	50.37	7.93						
	2W Unbundled ADSL Loop including manual service inquiry & facility reservation-Zone 2		2	UAL	UAL2X	13.71	120.84	70.56	50.37	7.93						
	2W Unbundled ADSL Loop including manual service inquiry & facility reservation-Zone 3		3	UAL	UAL2X	14.14	120.84	70.56	50.37	7.93						
	2W Unbundled ADSL Loop w/o manual service inquiry & facility reservaton-Zone 1		1	UAL	UAL2W	12.19	95.81	57.82	50.37	7.93						
	2W Unbundled ADSL Loop w/o manual service inquiry & facility reservaton-Zone 2		2	UAL	UAL2W	13.71	95.81	57.82	50.37	7.93						
	2W Unbundled ADSL Loop w/o manual service inquiry & facility reservaton-Zone 3		3	UAL	UAL2W	14.14	95.81	57.82	50.37	7.93						
	CLEC to CLEC Conversion Charge w/o outside dispatch			UAL	UREWO		86.38	40.48								
2-WIRE HIGH BIT RATE DIGITAL SUBSCRIBER LINE (HDSL) COMPATIBLE LOOP																
	2W Unbundled HDSL Loop including manual service inquiry & facility reservation-Zone 1		1	UHL	UHL2X	9.58	129.52	79.24	50.37	7.93						
	2W Unbundled HDSL Loop including manual service inquiry & facility reservation-Zone 2		2	UHL	UHL2X	10.92	129.52	79.24	50.37	7.93						
	2W Unbundled HDSL Loop including manual service inquiry & facility reservation-Zone 3		3	UHL	UHL2X	11.40	129.52	79.24	50.37	7.93						
	2W Unbundled HDSL Loop w/o manual service inquiry and facility reservation-Zone 1		1	UHL	UHL2W	9.58	104.49	66.50	50.37	7.93						
	2W Unbundled HDSL Loop w/o manual service inquiry and facility reservation-Zone 2		2	UHL	UHL2W	10.92	104.49	66.50	50.37	7.93						
	2W Unbundled HDSL Loop w/o manual service inquiry and facility reservation-Zone 3		3	UHL	UHL2W	11.40	104.49	66.50	50.37	7.93						
	CLEC to CLEC Conversion Charge w/o outside dispatch			UHL	UREWO		86.32	40.48								
4-WIRE HIGH BIT RATE DIGITAL SUBSCRIBER LINE (HDSL) COMPATIBLE LOOP																
	4 Wire Unbundled HDSL Loop including manual service inquiry and facility reservation-Zone 1		1	UHL	UHL4X	16.02	158.18	107.89	55.12	10.38						
	4W Unbundled HDSL Loop including manual service inquiry and facility reservation-Zone 2		2	UHL	UHL4X	14.33	158.18	107.89	55.12	10.38						
	4W Unbundled HDSL Loop including manual service inquiry and facility reservation-Zone 3		3	UHL	UHL4X	16.84	158.18	107.89	55.12	10.38						
	4W Unbundled HDSL Loop w/o manual service inquiry and facility reservation-Zone 1		1	UHL	UHL4W	16.02	133.14	95.16	55.12	10.38						
	4W Unbundled HDSL Loop w/o manual service inquiry and facility reservation-Zone 2		2	UHL	UHL4W	14.33	133.14	95.16	55.12	10.38						
	4W Unbundled HDSL Loop w/o manual service inquiry and facility reservation-Zone 3		3	UHL	UHL4W	16.84	133.14	95.16	55.12	10.38						
	CLEC to CLEC Conversion Charge w/o outside dispatch			UHL	UREWO		86.32	40.48								
4-WIRE DS1 DIGITAL LOOP																
	4W DS1 Digital Loop-Zone 1		1	USL	USLXX	79.51	253.03	157.89	44.80	11.73						
	4W DS1 Digital Loop-Zone 2		2	USL	USLXX	136.00	253.03	157.89	44.80	11.73						
	4W DS1 Digital Loop-Zone 3		3	USL	USLXX	229.15	253.03	157.89	44.80	11.73						

CATEGORY	RATE ELEMENTS	Interim	Zone	BCS	USOC	RATES($)					Svc Order Submitted Elec per LSR	Svc Order Submitted Manually per LSR	Incremental Charge - Manual Svc Order vs. Electronic-1st	Incremental Charge - Manual Svc Order vs. Electronic-Add'l	Incremental Charge - Manual Svc Order vs. Electronic-Disc 1st	Incremental Charge - Manual Svc Order vs. Electronic-Disc Add'l
							Nonrecurring		NRC Disconnect		OSS Rates($)					
						Rec	First	Add'l	First	Add'l	SOMEC	SOMAN	SOMAN	SOMAN	SOMAN	SOMAN
	Switch-As-Is Conversion rate per UNE Loop, Single LSR, (per DS1)			USL	URESL		24.88	3.51								
	Switch-As-Is Conversion rate per UNE Loop, Spreadsheet, (per DS1)			USL	URESP		26.37	4.99								
	CLEC to CLEC Conversion Charge w/o outside dispatch			USL	UREWO		101.30	43.13								
4-WIRE 19.2, 56 OR 64 KBPS DIGITAL GRADE LOOP																
	4 Wire Unbundled Digital Loop 2.4 Kbps-Zone 1		1	UDL	UDL2X	29.93	126.66	89.12	59.35	14.61						
	4 Wire Unbundled Digital Loop 2.4 Kbps-Zone 2		2	UDL	UDL2X	33.99	126.66	89.12	59.35	14.61						
	4 Wire Unbundled Digital Loop 2.4 Kbps-Zone3		3	UDL	UDL2X	34.74	126.66	89.12	59.35	14.61						
	4 Wire Unbundled Digital Loop 4.8 Kbps -Zone 1		1	UDL	UDL4X	29.93	126.66	89.12	59.35	14.61						
	4 Wire Unbundled Digital Loop 4.8 Kbps-Zone 2		2	UDL	UDL4X	33.99	126.66	89.12	59.35	14.61						
	4 Wire Unbundled Digital Loop 4.8 Kbps-Zone 3		3	UDL	UDL4X	34.74	126.66	89.12	59.35	14.61						
	4 Wire Unbundled Digital Loop 9.6 Kbps-Zone 1		1	UDL	UDL9X	29.93	126.66	89.12	59.35	14.61						
	5 Wire Unbundled Digital Loop 9.6 Kbps-Zone 2		2	UDL	UDL9X	33.99	126.66	89.12	59.35	14.61						
	6 Wire Unbundled Digital Loop 9.6 Kbps-Zone 3		3	UDL	UDL9X	34.74	126.66	89.12	59.35	14.61						
	4 Wire Unbundled Digital 19.2 Kbps-Zone 1		1	UDL	UDL19	29.93	126.66	89.12	59.35	14.61						
	4 Wire Unbundled Digital 19.2 Kbps-Zone 2		2	UDL	UDL19	33.99	126.66	89.12	59.35	14.61						
	4 Wire Unbundled Digital 19.2 Kbps-Zone 3		3	UDL	UDL19	34.74	126.66	89.12	59.35	14.61						
	4 Wire Unbundled Digital Loop 56 Kbps-Zone 1		1	UDL	UDL56	29.93	126.66	89.12	59.35	14.61						
	4 Wire Unbundled Digital Loop 56 Kbps-Zone 2		2	UDL	UDL56	33.99	126.66	89.12	59.35	14.61						
	4 Wire Unbundled Digital Loop 56 Kbps-Zone 3		3	UDL	UDL56	34.74	126.66	89.12	59.35	14.61						
	4 Wire Unbundled Digital Loop 64 Kbps-Zone 1		1	UDL	UDL64	29.93	126.66	89.12	59.35	14.61						
	4 Wire Unbundled Digital Loop 64 Kbps-Zone 2		2	UDL	UDL64	33.99	126.66	89.12	59.35	14.61						
	4 Wire Unbundled Digital Loop 64 Kbps-Zone 3		3	UDL	UDL64	34.74	126.66	89.12	59.35	14.61						
	Switch-As-Is Conversion rate per UNE Loop, Single LSR, (per DS0)			UDL	URESL		24.88	3.51								
	Switch-As-Is Conversion rate per UNE Loop, Spreadsheet, (per DS0)			UDL	URESP		26.37	4.99								
	CLEC to CLEC Conversion Charge w/o outside dispatch			UDL	UREWO		102.34	49.85								
2-WIRE Unbundled COPPER LOOP																
	2W Unbundled Copper Loop-Designed including manual service inquiry & facility reservation-Zone 1		1	UCL	UCLPB	12.19	119.91	69.62	50.37	7.93						
	2W Unbundled Copper Loop-Designed including manual service inquiry & facility reservation-Zone 2		2	UCL	UCLPB	13.71	119.91	69.62	50.37	7.93						
	2W Unbundled Copper Loop-Designed including manual service inquiry & facility reservation-Zone 3		3	UCL	UCLPB	14.14	119.91	69.62	50.37	7.93						
	2W Unbundled Copper Loop-Designed w/o manual service inquiry and facility reservation-Zone 1		1	UCL	UCLPW	12.19	94.87	56.89	50.37	7.93						
	2W Unbundled Copper Loop-Designed w/o manual service inquiry and facility reservation-Zone 2		2	UCL	UCLPW	13.71	94.87	56.89	50.37	7.93						
	2W Unbundled Copper Loop-Designed w/o manual service inquiry and facility reservation-Zone 3		3	UCL	UCLPW	14.14	94.87	56.89	50.37	7.93						
	Order Coordination for Unbundled Copper Loops (per loop)			UCL	UCLMC		8.17	8.17								
	CLEC to CLEC Conversion Charge w/o outside dispatch (UCL-Des)			UCL	UREWO		94.87	42.57								
4-WIRE COPPER LOOP																
	4W Copper Loop-Designed including manual service inquiry and facility reservation-Zone 1		1	UCL	UCL4S	19.64	144.17	93.88	55.12	10.38						
	4W Copper Loop-Designed including manual service inquiry and facility reservation-Zone 2		2	UCL	UCL4S	20.90	144.17	93.88	55.12	10.38						
	4W Copper Loop-Designed including manual service inquiry and facility reservation-Zone 3		3	UCL	UCL4S	19.34	144.17	93.88	55.12	10.38						
	4W Copper Loop-Designed w/o manual service inquiry and facility reservation-Zone 1		1	UCL	UCL4W	19.64	119.13	81.15	55.12	10.38						
	4W Copper Loop-Designed w/o manual service inquiry and facility reservation-Zone 2		2	UCL	UCL4W	20.90	119.13	81.15	55.12	10.38						
	4W Copper Loop-Designed w/o manual service inquiry and facility reservation-Zone 3		3	UCL	UCL4W	19.34	119.13	81.15	55.12	10.38						
	Order Coordination for Unbundled Copper Loops (per loop)			UCL	UCLMC		8.17	8.17								
	CLEC to CLEC Conversion Charge w/o outside dispatch (UCL-Des)			UCL	UREWO		94.87	42.57								
	Order Coordination for Specified Conversion Time (per LSR)			UEA, UDN, UAL, UHL, UDL, USL	OCOSL		18.13									
Rearrangements																
	EEL to UNE-L Retermination, per 2W Unbundled Voice Loop-SL2			UEA	UREEL		87.90	36.44								

CATEGORY	RATE ELEMENTS	Interim	Zone	BCS	USOC	RATES($)					Svc Order Submitted Elec per LSR	Svc Order Submitted Manually per LSR	Incremental Charge - Manual Svc Order vs. Electronic-1st	Incremental Charge - Manual Svc Order vs. Electronic-Add'l	Incremental Charge - Manual Svc Order vs. Electronic-Disc 1st	Incremental Charge - Manual Svc Order vs. Electronic-Disc Add'l
							Nonrecurring		NRC Disconnect		OSS Rates($)					
						Rec	First	Add'l	First	Add'l	SOMEC	SOMAN	SOMAN	SOMAN	SOMAN	SOMAN
	EEL to UNE-L Retermination, per 4 Wire Unbundled Voice Loop			UEA	UREEL		87.90	36.44								
	EEL to UNE-L Retermination, per 2W ISDN Loop			UDN	UREEL		91.82	44.25								
	EEL to UNE-L Retermination, per 4 Wire Unbundled Digital Loop			UDL	UREEL		102.34	49.85								
	EEL to UNE-L Retermination, per 4 Wire Unbundled DS1 Loop			USL	UREEL		101.30	43.13								
UNE LOOP COMMINGLING																
2-WIRE ANALOG VOICE GRADE LOOP - COMMINGLING																
	2W Analog VG Loop- SL2 w/Loop or Ground Start Signaling-Zone 1		1	NTCVG	UEAL2	16.68	105.98	68.43	53.05	10.61						
	2W Analog VG Loop- SL2 w/Loop or Ground Start Signaling-Zone 2		2	NTCVG	UEAL2	23.13	105.98	68.43	53.05	10.61						
	2W Analog VG Loop- SL2 w/Loop or Ground Start Signaling-Zone 3		3	NTCVG	UEAL2	28.46	105.98	68.43	53.05	10.61						
	2W Analog VG Loop- SL2 w/Reverse Battery Signaling-Zone 1		1	NTCVG	UEAR2	16.68	105.98	68.43	53.05	10.61						
	2W Analog VG Loop- SL2 w/Reverse Battery Signaling-Zone 2		2	NTCVG	UEAR2	23.13	105.98	68.43	53.05	10.61						
	2W Analog VG Loop- SL2 w/Reverse Battery Signaling-Zone 3		3	NTCVG	UEAR2	28.46	105.98	68.43	53.05	10.61						
	Switch-As-Is Conversion rate per UNE Loop, Single LSR, (per DS0)			NTCVG	URESL		24.88	3.51								
	Switch-As-Is Conversion rate per UNE Loop, Spreadsheet, (per DS0)			NTCVG	URESP		26.37	4.99								
	CLEC to CLEC Conversion Charge w/o outside dispatch			NTCVG	UREWO		87.90	36.44								
	Loop Tagging-SL2 (SL2)			NTCVG	URETL		11.24	1.10								
4-WIRE ANALOG VOICE GRADE LOOP																
	4W Analog VG Loop-Zone 1		1	NTCVG	UEAL4	32.59	132.38	94.83	59.35	14.61						
	4W Analog VG Loop-Zone 2		2	NTCVG	UEAL4	43.89	132.38	94.83	59.35	14.61						
	4W Analog VG Loop-Zone 3		3	NTCVG	UEAL4	43.38	132.38	94.83	59.35	14.61						
	Switch-As-Is Conversion rate per UNE Loop, Single LSR, (per DS0)			NTCVG	URESL		24.88	3.51								
	Switch-As-Is Conversion rate per UNE Loop, Spreadsheet, (per DS0)			NTCVG	URESP		26.37	4.99								
	CLEC to CLEC Conversion Charge w/o outside dispatch			NTCVG	UREWO		87.90	36.44								
4-WIRE DS1 DIGITAL LOOP - COMMINGLING																
	4W DS1 Digital Loop-Zone 1		1	NTCD1	USLXX	79.51	253.03	157.89	44.80	11.73						
	4W DS1 Digital Loop-Zone 2		2	NTCD1	USLXX	136.00	253.03	157.89	44.80	11.73						
	4W DS1 Digital Loop-Zone 3		3	NTCD1	USLXX	229.15	253.03	157.89	44.80	11.73						
	Switch-As-Is Conversion rate per UNE Loop, Single LSR, (per DS1)			NTCD1	URESL		24.88	3.51								
	Switch-As-Is Conversion rate per UNE Loop, Spreadsheet, (per DS1)			NTCD1	URESP		26.37	4.99								
	CLEC to CLEC Conversion Charge w/o outside dispatch			NTCD1	UREWO		101.30	43.13								
4-WIRE 19.2, 56 OR 64 KBPS DIGITAL GRADE LOOP																
	4 Wire Unbundled Digital Loop 2.4 Kbps-Zone 1		1	NTCUD	UDL2X	29.93	126.66	89.12	59.35	14.61						
	4 Wire Unbundled Digital Loop 2.4 Kbps-Zone 2		2	NTCUD	UDL2X	33.99	126.66	89.12	59.35	14.61						
	4 Wire Unbundled Digital Loop 2.4 Kbps-Zone3		3	NTCUD	UDL2X	34.74	126.66	89.12	59.35	14.61						
	4 Wire Unbundled Digital Loop 4.8 Kbps -Zone 1		1	NTCUD	UDL4X	29.93	126.66	89.12	59.35	14.61						
	4 Wire Unbundled Digital Loop 4.8 Kbps-Zone 2		2	NTCUD	UDL4X	33.99	126.66	89.12	59.35	14.61						
	4 Wire Unbundled Digital Loop 4.8 Kbps-Zone 3		3	NTCUD	UDL4X	34.74	126.66	89.12	59.35	14.61						
	4 Wire Unbundled Digital Loop 9.6 Kbps-Zone 1		1	NTCUD	UDL9X	29.93	126.66	89.12	59.35	14.61						
	5 Wire Unbundled Digital Loop 9.6 Kbps-Zone 2		2	NTCUD	UDL9X	33.99	126.66	89.12	59.35	14.61						
	6 Wire Unbundled Digital Loop 9.6 Kbps-Zone 3		3	NTCUD	UDL9X	34.74	126.66	89.12	59.35	14.61						
	4 Wire Unbundled Digital 19.2 Kbps-Zone 1		1	NTCUD	UDL19	29.93	126.66	89.12	59.35	14.61						
	4 Wire Unbundled Digital 19.2 Kbps-Zone 2		2	NTCUD	UDL19	33.99	126.66	89.12	59.35	14.61						
	4 Wire Unbundled Digital 19.2 Kbps-Zone 3		3	NTCUD	UDL19	34.74	126.66	89.12	59.35	14.61						
	4 Wire Unbundled Digital Loop 56 Kbps-Zone 1		1	NTCUD	UDL56	29.93	126.66	89.12	59.35	14.61						
	4 Wire Unbundled Digital Loop 56 Kbps-Zone 2		2	NTCUD	UDL56	33.99	126.66	89.12	59.35	14.61						
	4 Wire Unbundled Digital Loop 56 Kbps-Zone 3		3	NTCUD	UDL56	34.74	126.66	89.12	59.35	14.61						
	4 Wire Unbundled Digital Loop 64 Kbps-Zone 1		1	NTCUD	UDL64	29.93	126.66	89.12	59.35	14.61						
	4 Wire Unbundled Digital Loop 64 Kbps-Zone 2		2	NTCUD	UDL64	33.99	126.66	89.12	59.35	14.61						
	4 Wire Unbundled Digital Loop 64 Kbps-Zone 3		3	NTCUD	UDL64	34.74	126.66	89.12	59.35	14.61						
	Switch-As-Is Conversion rate per UNE Loop, Single LSR, (per DS0)			NTCUD	URESL		24.88	3.51								
	Switch-As-Is Conversion rate per UNE Loop, Spreadsheet, (per DS0)			NTCUD	URESP		26.37	4.99								
	CLEC to CLEC Conversion Charge w/o outside dispatch			NTCUD	UREWO		102.34	49.85								
	Order Coordination for Specified Conversion Time (per LSR)			NTCVG, NTCUD, NTCD1	OCOSL		18.13									
UNBUNDLED EXCHANGE ACCESS LOOP																
2-WIRE ANALOG VOICE GRADE LOOP																
	2W Analog VG Loop- Service Level 1- Zone 1		1	UEANL	UEAL2	14.94	37.92	17.62	23.56	5.32						
	2W Analog VG Loop- Service Level 1- Zone 2		2	UEANL	UEAL2	21.39	37.92	17.62	23.56	5.32						
	2W Analog VG Loop- Service Level 1- Zone 3		3	UEANL	UEAL2	26.72	37.92	17.62	23.56	5.32						

CATEGORY	RATE ELEMENTS	Interim	Zone	BCS	USOC	RATES($)					Svc Order Submitted Elec per LSR	Svc Order Submitted Manually per LSR	Incremental Charge - Manual Svc Order vs. Electronic-1st	Incremental Charge - Manual Svc Order vs. Electronic-Add'l	Incremental Charge - Manual Svc Order vs. Electronic-Disc 1st	Incremental Charge - Manual Svc Order vs. Electronic-Disc Add'l
							Nonrecurring		NRC Disconnect		OSS Rates($)					
						Rec	First	Add'l	First	Add'l	SOMEC	SOMAN	SOMAN	SOMAN	SOMAN	SOMAN
	2W Analog VG Loop- Service Level 1- Zone 1		1	UEANL	UEASL	14.94	37.92	17.62	23.56	5.32						
	2W Analog VG Loop- Service Level 1- Zone 2		2	UEANL	UEASL	21.39	37.92	17.62	23.56	5.32						
	2W Analog VG Loop- Service Level 1- Zone 3		3	UEANL	UEASL	26.72	37.92	17.62	23.56	5.32						
	Tag Loop at End User Premise			UEANL	URETL		8.95	0.88								
	Loop Testing-Basic 1st Half Hour			UEANL	URET1		34.23	0.00								
	Loop Testing-Basic Additional Half Hour			UEANL	URETA		19.90	19.90								
	Manual Order Coordination for UVL-SL1s (per loop)			UEANL	UEAMC		8.17	8.17								
	Order Coordination for Specified Conversion Time for UVL-SL1 (per LSR)			UEANL	OCOSL		18.13	18.13								
	Unbundled Non-Design Voice Loop, billing for BST providing make-up (Engineering Information-E.I.)			UEANL	UEANM		13.47	13.47								
	CLEC to CLEC Conversion Charge w/o Outside Dispatch (UVL-SL1)			UEANL	UREWO		15.81	8.96								
2-WIRE Unbundled COPPER LOOP																
	2W Unbundled Copper Loop-Non-Designed Zone 1		1	UEQ	UEQ2X	12.94	36.40	16.10	22.66	4.42						
	2W Unbundled Copper Loop-Non-Designed-Zone 2		2	UEQ	UEQ2X	14.51	36.40	16.10	22.66	4.42						
	2W Unbundled Copper Loop-Non-Designed-Zone 3		3	UEQ	UEQ2X	15.02	36.40	16.10	22.66	4.42						
	Unbundled Misc Rate Element, Tag Loop at End User Premise			UEQ	URETL		8.95	0.88								
	Loop Testing-Basic 1st Half Hour			UEQ	URET1		34.23	0.00								
	Loop Testing-Basic Additional Half Hour			UEQ	URETA		19.90	19.90								
	Manual Order Coordination 2W Unbundled Copper Loop-Non-Designed (per loop)			UEQ	USBMC		8.17	8.17								
	Unbundled Copper Loop-Non-Design billing for BST providing make-up (Engineering Information-E.I.)			UEQ	UEQMU		13.47	13.47								
	CLEC to CLEC Conversion Charge w/o Outside Dispatch (UCL-ND)			UEQ	UREWO		14.30	7.45								
LOOP MODIFICATION																
	Unbundled Loop Modification, Removal of Load Coils-2W pair less than or equal to 18k ft, per Unbundled Loop			UAL, UHL, UCL, UEQ, ULS, UEA, UEANL, UEPSR, UEPSB	ULM2L		32.46	32.46								
	Unbundled Loop Modification Removal of Load Coils-4 Wire less than or equal to 18K ft, per Unbundled Loop			UHL, UCL, UEA	ULM4L		32.46	32.46								
	Unbundled Loop Modification Removal of Bridged Tap Removal, per unbundled loop			UAL, UHL, UCL, UEQ, ULS, UEA, UEANL, UEPSR, UEPSB	ULMBT		32.48	32.48								
SUB-LOOPS																
Sub-Loop Distribution																
	Sub-Loop-Per Cross Box Location-CLEC Feeder Facility Set-Up			UEANL, UEF	USBSA		241.42	241.42								
	Sub-Loop-Per Cross Box Location-Per 25 Pair Panel Set-Up			UEANL, UEF	USBSB		22.69	22.69								
	Sub-Loop-Per Building Equipment Room-CLEC Feeder Facility Set-Up			UEANL	USBSC		177.84	177.84								
	Sub-Loop-Per Building Equipment Room-Per 25 Pair Panel Set-Up			UEANL	USBSD		55.58	55.58								
	Sub-Loop Distribution Per 2W Analog VG Loop-Zone 1		1	UEANL	USBN2	8.87	65.94	31.03	45.35	6.71						
	Sub-Loop Distribution Per 2W Analog VG Loop-Zone 2		2	UEANL	USBN2	12.58	65.94	31.03	45.35	6.71						
	Sub-Loop Distribution Per 2W Analog VG Loop-Zone 3		3	UEANL	USBN2	14.79	65.94	31.03	45.35	6.71						
	Order Coordination for Unbundled Sub-Loops, per sub-loop pair			UEANL	USBMC		8.17	8.17								
	Sub-Loop Distribution Per 4W Analog VG Loop -Zone 1		1	UEANL	USBN4	14.11	79.21	44.29	49.82	9.09						
	Sub-Loop Distribution Per 4W Analog VG Loop -Zone 2		2	UEANL	USBN4	19.40	79.21	44.29	49.82	9.09						
	Sub-Loop Distribution Per 4W Analog VG Loop -Zone 3		3	UEANL	USBN4	18.90	79.21	44.29	49.82	9.09						
	Order Coordination for Unbundled Sub-Loops, per sub-loop pair			UEANL	USBMC		8.17	8.17								
	Sub-Loop 2W Intrabuilding Network Cable (INC)			UEANL	USBR2	2.41	53.13	18.21	45.35	6.71						
	Order Coordination for Unbundled Sub-Loops, per sub-loop pair			UEANL	USBMC		8.17	8.17								
	Sub-Loop 4W Intrabuilding Network Cable (INC)			UEANL	USBR4	5.36	59.38	24.47	49.82	9.09						
	Order Coordination for Unbundled Sub-Loops, per sub-loop pair			UEANL	USBMC		8.17	8.17								
	Loop Testing-Basic 1st Half Hour			UEANL	URET1		34.23	0.00								
	Loop Testing-Basic Additional Half Hour			UEANL	URETA		19.90	19.90								
	2W Copper Unbundled Sub-Loop Distribution-Zone 1		1	UEF	UCS2X	7.11	65.94	31.03	45.35	6.71						
	2W Copper Unbundled Sub-Loop Distribution-Zone 2		2	UEF	UCS2X	9.83	65.94	31.03	45.35	6.71						
	2W Copper Unbundled Sub-Loop Distribution-Zone 3		3	UEF	UCS2X	10.48	65.94	31.03	45.35	6.71						

UNBUNDLED NETWORK ELEMENTS - South Carolina														Attachment: 2 Exh A			
CATEGORY		RATE ELEMENTS	Interim	Zone	BCS	USOC	RATES($)					Svc Order Submitted Elec per LSR	Svc Order Submitted Manually per LSR	Incremental Charge - Manual Svc Order vs. Electronic-1st	Incremental Charge - Manual Svc Order vs. Electronic-Add'l	Incremental Charge - Manual Svc Order vs. Electronic-Disc 1st	Incremental Charge - Manual Svc Order vs. Electronic-Disc Add'l
								Nonrecurring		NRC Disconnect		OSS Rates($)					
							Rec	First	Add'l	First	Add'l	SOMEC	SOMAN	SOMAN	SOMAN	SOMAN	SOMAN
		Order Coordination for Unbundled Sub-Loops, per sub-loop pair			UEF	USBMC		8.17	8.17								
		4 Wire Copper Unbundled Sub-Loop Distribution-Zone 1		1	UEF	UCS4X	7.85	79.21	44.29	49.82	9.09						
		4 Wire Copper Unbundled Sub-Loop Distribution-Zone 2		2	UEF	UCS4X	14.17	79.21	44.29	49.82	9.09						
		4 Wire Copper Unbundled Sub-Loop Distribution-Zone 3		3	UEF	UCS4X	12.64	79.21	44.29	49.82	9.09						
		Order Coordination for Unbundled Sub-Loops, per sub-loop pair			UEF	USBMC		8.17	8.17								
		Loop Tagging Service Level 1, Unbundled Copper Loop, Non-Designed and Distribution Subloops			UEF, UEANL	URETL		8.95	0.88								
		Loop Testing-Basic 1st Half Hour			UEF	URET1		34.23	0.00								
		Loop Testing-Basic Additional Half Hour			UEF	URETA		19.90	19.90								
	Unbundled Sub-Loop Modification																
		Unbundled Sub-Loop Modification-2-W Copper Dist Load Coil/Equip Removal per 2-W PR			UEF	ULM2X		176.17	5.11								
		Unbundled Sub-loop Modification-4-W Copper Dist Load Coil/Equip Removal per 4-W PR			UEF	ULM4X		176.17	5.11								
		Unbundled Loop Modification, Removal of Bridge Tap, per unbundled loop			UEF	ULMBT		278.82	6.13								
	Unbundled Network Terminating Wire (UNTW)																
		Unbundled Network Terminating Wire (UNTW) per Pair			UENTW	UENPP	0.3303	30.20	30.20								
	Network Interface Device (NID)																
		Network Interface Device (NID)-1-2 lines			UENTW	UND12		43.68	28.79								
		Network Interface Device (NID)-1-6 lines			UENTW	UND16		64.42	49.53								
		Network Interface Device Cross Connect-2 W			UENTW	UNDC2		5.92	5.92								
		Network Interface Device Cross Connect-4W			UENTW	UNDC4		5.92	5.92								
UNE OTHER, PROVISIONING ONLY - NO RATE																	
		Unbundled Contact Name, Provisioning Only-no rate			UAL, UCL, UDC, UDL, UDN, UEA, UHL, UEANL, UEF, UEQ, UENTW, NTCVG, NTCUD, NTCD1, USL	UNECN	0.00	0.00									
		Unbundled DS1 Loop-Superframe Format Option-no rate			USL, NTCD1	CCOSF	0.00	0.00									
		Unbundled DS1 Loop-Expanded Superframe Format option-no rate			USL, NTCD1	CCOEF	0.00	0.00									
		NID-Dispatch and Service Order for NID installation			UENTW	UNDBX	0.00	0.00									
		UNTW Circuit Establishment, Provisioning Only-No Rate			UENTW	UENCE	0.00	0.00									
LOOP MAKE-UP																	
		Loop Makeup-Preordering w/o Reservation, per working or spare facility queried (Manual).			UMK	UMKLW		24.04	24.04								
		Loop Makeup-Preordering With Reservation, per spare facility queried (Manual).			UMK	UMKLP		25.49	25.49								
		Loop Makeup--With or w/o Reservation, per working or spare facility queried (Mechanized)			UMK	UMKMQ		0.34	0.34								
LINE SPLITTING																	
	END USER ORDERING-CENTRAL OFFICE BASED																
		Line Splitting-per line activation DLEC owned splitter			UEPSR UEPSB	UREOS	0.61										
		Line Splitting-per line activation BST owned-physical			UEPSR UEPSB	UREBP	0.61	37.09	21.24	20.07	9.85						
		Line Splitting-per line activation BST owned-virtual			UEPSR UEPSB	UREBV	0.61	37.09	21.24	20.07	9.85						
	UNBUNDLED EXCHANGE ACCESS LOOP																
	2-WIRE ANALOG VOICE GRADE LOOP																
		2W Analog VG Loop-Service Level 1-Line Splitting- Zone 1		1	UEPSR UEPSB	UEALS	14.94	37.92	17.62	23.56	5.32						
		2W Analog VG Loop-Service Level 1-Line Splitting- Zone 1		1	UEPSR UEPSB	UEABS	14.94	37.92	17.62	23.56	5.32						
		2W Analog VG Loop- Service Level 1-Line Splitting-Zone 2		2	UEPSR UEPSB	UEALS	21.39	37.92	17.62	23.56	5.32						
		2W Analog VG Loop- Service Level 1-Line Splitting-Zone 2		2	UEPSR UEPSB	UEABS	21.39	37.92	17.62	23.56	5.32						
		2W Analog VG Loop-Service Level 1-Line Splitting-Zone 3		3	UEPSR UEPSB	UEALS	26.72	37.92	17.62	23.56	5.32						
		2W Analog VG Loop-Service Level 1-Line Splitting-Zone 3		3	UEPSR UEPSB	UEABS	26.72	37.92	17.62	23.56	5.32						
	PHYSICAL COLLOCATION																
		Physical Collocation-2W Cross Connects (Loop) for Line Splitting			UEPSR UEPSB	PE1LS	0.0341	12.32	11.83	6.04	5.45						
	VIRTUAL COLLOCATION																
		Virtual Collocation-2W Cross Connects (Loop) for Line Splitting			UEPSR UEPSB	VE1LS	0.0317	12.32	11.83	6.04	5.45						
UNBUNDLED DEDICATED TRANSPORT																	

CATEGORY	RATE ELEMENTS	Interim	Zone	BCS	USOC	RATES($)					Svc Order Submitted Elec per LSR	Svc Order Submitted Manually per LSR	Incremental Charge - Manual Svc Order vs. Electronic-1st	Incremental Charge - Manual Svc Order vs. Electronic-Add'l	Incremental Charge - Manual Svc Order vs. Electronic-Disc 1st	Incremental Charge - Manual Svc Order vs. Electronic-Disc Add'l
							Nonrecurring		NRC Disconnect		OSS Rates($)					
						Rec	First	Add'l	First	Add'l	SOMEC	SOMAN	SOMAN	SOMAN	SOMAN	SOMAN
	INTEROFFICE CHANNEL - DEDICATED TRANSPORT															
	Interoffice Channel-2W VG-per mile			U1TVX	1L5XX	0.0167										
	Interoffice Channel-2W VG-Facility Termination			U1TVX	U1TV2	24.30	40.63	27.47	16.77	6.91						
	Interoffice Channel-2W VG Rev Bat.-per mile			U1TVX	1L5XX	0.0167										
	Interoffice Channel-2W VG Rev Bat.-Facility Termination			U1TVX	U1TR2	24.30	40.63	27.47	16.77	6.91						
	Interoffice Channel-4W VG-per mile			U1TVX	1L5XX	0.0167										
	Interoffice Channel-4- Wire VG-Facility Termination			U1TVX	U1TV4	21.29	40.63	27.47	16.77	6.91						
	Interoffice Channel-56 kbps-per mile			U1TDX	1L5XX	0.0167										
	Interoffice Channel-56 kbps-Facility Termination			U1TDX	U1TD5	16.76	40.63	27.47	16.77	6.91						
	Interoffice Channel-64 kbps-per mile			U1TDX	1L5XX	0.0167										
	Interoffice Channel-64 kbps-Facility Termination			U1TDX	U1TD6	16.76	40.63	27.47	16.77	6.91						
	Interoffice Channel-DS1-per mile			U1TD1	1L5XX	0.3415										
	Interoffice Channel-DS1-Facility Termination			U1TD1	U1TF1	77.14	89.47	81.99	16.39	14.48						
	Interoffice Channel-DS3-per mile			U1TD3	1L5XX	8.02										
	Interoffice Channel-DS3-Facility Termination			U1TD3	U1TF3	880.65	279.37	163.12	60.33	58.59						
	Interoffice Channel-STS-1-per mile			U1TS1	1L5XX	8.02										
	Interoffice Channel-STS-1-Facility Termination			U1TS1	U1TFS	880.55	279.37	163.12	60.33	58.59						
	Local Channel-Dedicated-2W VG			ULDVX	ULDV2	17.63										
	Local Channel-Dedicated-2W VG Rev Bat			ULDVX	ULDR2	17.63										
	Local Channel-Dedicated-4W VG			ULDVX, UNCVX	ULDV4	19.02										
	Local Channel-Dedicated-DS1-Zone 1		1	ULDD1, UNC1X	ULDF1	49.01										
	Local Channel-Dedicated-DS1 -Zone 2		2	ULDD1, UNC1X	ULDF1	80.87										
	Local Channel-Dedicated-DS1 -Zone 3		3	ULDD1, UNC1X	ULDF1	219.28										
	Local Channel-Dedicated-DS3-Per Mile per month			ULDD3, UNC3X	1L5NC	13.72										
	Local Channel-Dedicated-DS3-Facility Termination			ULDD3, UNC3X	ULDF3	512.90										
	Local Channel-Dedicated-STS-1- Per Mile per month			ULDS1, UNCSX	1L5NC	13.72										
	Local Channel-Dedicated-STS-1 -Facility Termination			ULDS1, UNCSX	ULDFS	500.37										
	UNBUNDLED DARK FIBER															
	Dark Fiber-Interoffice Transport, Per Four Fiber Strands, Per Route Mile Or Fraction Thereof			UDF, UDFCX	1L5DF	36.41										
	Dark Fiber-Interoffice Transport, Per Four Fiber Strands, Per Route Mile Or Fraction Thereof			UDF, UDFCX	UDF14		640.51	138.17	317.76	198.11						
DARK FIBER																
	Dark Fiber, Four Fiber Strands, Per Route Mile or Fraction Thereof per month-Local Channel			UDF, UDFCX	1L5DC	112.30										
	Dark Fiber, Four Fiber Strands, Per Route Mile or Fraction Thereof per month-Local Loop			UDF, UDFCX	1L5DL	112.30										
8XX ACCESS TEN DIGIT SCREENING																
	8XX Access Ten Digit Screening, Per Call					0.0006673										
	8XX Access Ten Digit Screening, w/ 8XX No. Delivery					0.0006673										
	8XX Access Ten Digit Screening, w/ POTS No. Delivery					0.0006673										
LINE INFORMATION DATA BASE ACCESS (LIDB)																
	LIDB Common Transport Per Query					0.0000246										
	LIDB Validation Per Query					0.0138158										
	LIDB Originating Point Code Establishment or Change			OQU	NRBPX		34.40		42.18							
CALLING NAME (CNAM) SERVICE																
	CNAM for DB Owners, Per Query					0.0010433										
	CNAM for Non DB Owners, Per Query					0.0010433										
SELECTIVE ROUTING																
	Selective Routing Per Unique Line Class Code Per Request Per Switch						84.89	84.89	14.14	14.14						
AIN SELECTIVE CARRIER ROUTING																
	Regional Service Establishment						101,324.34	101,324.34	8,609.85	8,609.85						
	End Office Establishment						175.66	175.66	1.70	1.70						
	Query NRC, per query					0.0035036										
AIN - BELLSOUTH AIN SMS ACCESS SERVICE																
	AIN SMS Access Service-Service Establishment, Per State, Initial Setup			A1N	CAMSE		39.53	39.53	40.78	40.78						
	AIN SMS Access Service-Port Connection-Dial/Shared Access			A1N	CAMDP		7.85	7.85	9.11	9.11						

UNBUNDLED NETWORK ELEMENTS - South Carolina														Attachment: 2 Exh A			
CATEGORY		RATE ELEMENTS	Interim	Zone	BCS	USOC	RATES($)					Svc Order Submitted Elec per LSR	Svc Order Submitted Manually per LSR	Incremental Charge - Manual Svc Order vs. Electronic-1st	Incremental Charge - Manual Svc Order vs. Electronic-Add'l	Incremental Charge - Manual Svc Order vs. Electronic-Disc 1st	Incremental Charge - Manual Svc Order vs. Electronic-Disc Add'l
								Nonrecurring		NRC Disconnect		OSS Rates($)					
							Rec	First	Add'l	First	Add'l	SOMEC	SOMAN	SOMAN	SOMAN	SOMAN	SOMAN
		AIN SMS Access Service-Port Connection-ISDN Access			A1N	CAM1P		7.85	7.85	9.11	9.11						
		AIN SMS Access Service-User Identification Codes-Per User ID Code			A1N	CAMAU		35.08	35.08	27.12	27.12						
		AIN SMS Access Service-Security Card, Per User ID Code, Initial or Replacement			A1N	CAMRC		41.98	41.98	11.74	11.74						
		AIN SMS Access Service-Storage, Per Unit (100 Kilobytes)					0.0027										
		AIN SMS Access Service-Session, Per Minute					0.7121										
		AIN SMS Access Service-Company Performed Session, Per Minute					0.8364										
HIGH CAPACITY UNBUNDLED LOCAL LOOP																	
	DS-3/STS-1 UNBUNDLED LOCAL LOOP - Stand Alone																
		DS3 Unbundled Local Loop-per mile			UE3	1L5ND	12.26										
		DS3 Unbundled Local Loop-Facility Termination			UE3	UE3PX	306.36	452.52	264.53	119.75	83.77						
		STS-1Unbundled Local Loop-per mile			UDLSX	1L5ND	12.26										
		STS-1 Unbundled Local Loop-Facility Termination			UDLSX	UDLS1	313.49	452.52	264.53	119.75	83.77						
ENHANCED EXTENDED LINK (EELs)																	
	Network Elements Used in Combinations																
		2W VG Loop (SL2) in Combination-Zone 1		1	UNCVX	UEAL2	16.68	105.98	68.43	53.05	10.61						
		2W VG Loop (SL2) in Combination-Zone 2		2	UNCVX	UEAL2	23.13	105.98	68.43	53.05	10.61						
		2W VG Loop (SL2) in Combination-Zone 3		3	UNCVX	UEAL2	28.46	105.98	68.43	53.05	10.61						
		4W Analog VG Loop in Combination -Zone 1		1	UNCVX	UEAL4	32.59	132.38	94.83	59.35	14.61						
		4W Analog VG Loop in Combination -Zone 2		2	UNCVX	UEAL4	43.89	132.38	94.83	59.35	14.61						
		4W Analog VG Loop in Combination -Zone 3		3	UNCVX	UEAL4	43.38	132.38	94.83	59.35	14.61						
		2W ISDN Loop in Combination-Zone 1		1	UNCNX	U1L2X	25.21	117.58	80.03	53.05	10.61						
		2W ISDN Loop in Combination-Zone 2		2	UNCNX	U1L2X	32.76	117.58	80.03	53.05	10.61						
		2W ISDN Loop in Combination-Zone 3		3	UNCNX	U1L2X	37.70	117.58	80.03	53.05	10.61						
		4W 56Kbps Digital Grade Loop in Combination-Zone 1		1	UNCDX	UDL56	29.93	126.66	89.12	59.35	14.61						
		4W 56Kbps Digital Grade Loop in Combination-Zone 2		2	UNCDX	UDL56	33.99	126.66	89.12	59.35	14.61						
		4W 56Kbps Digital Grade Loop in Combination-Zone 3		3	UNCDX	UDL56	34.74	126.66	89.12	59.35	14.61						
		4W 64Kbps Digital Grade Loop in Combination-Zone 1		1	UNCDX	UDL64	29.93	126.66	89.12	59.35	14.61						
		4W 64Kbps Digital Grade Loop in Combination-Zone 2		2	UNCDX	UDL64	33.99	126.66	89.12	59.35	14.61						
		4W 64Kbps Digital Grade Loop in Combination-Zone 3		3	UNCDX	UDL64	34.74	126.66	89.12	59.35	14.61						
		4W DS1 Digital Loop in Combination-Zone 1		1	UNC1X	USLXX	79.51	253.03	157.89	44.80	11.73						
		4W DS1 Digital Loop in Combination-Zone 2		2	UNC1X	USLXX	136.00	253.03	157.89	44.80	11.73						
		4W DS1 Digital Loop in Combination-Zone 3		3	UNC1X	USLXX	229.15	253.03	157.89	44.80	11.73						
		DS3 Local Loop in combination-per mile			UNC3X	1L5ND	12.26										
		DS3 Local Loop in combination-Facility Termination			UNC3X	UE3PX	306.36	452.52	264.53	119.75	83.77						
		STS-1 Local Loop in combination-per mile			UNCSX	1L5ND	12.26										
		STS-1 Local Loop in combination-Facility Termination			UNCSX	UDLS1	313.49	452.52	264.53	119.75	83.77						
		Interoffice Channel in combination-2W VG-per mile			UNCVX	1L5XX	0.0167										
		Interoffice Channel in combination-2W VG-Facility Termination			UNCVX	U1TV2	24.30	40.63	27.47	16.77	6.91						
		Interoffice Channel in combination-4W VG-per mile			UNCVX	1L5XX	0.0167										
		Interoffice Channel in combination-4W VG-Facility Termination			UNCVX	U1TV4	21.29	40.63	27.47	16.77	6.91						
		Interoffice Channel in combination-4W 56 kbps-per mile			UNCDX	1L5XX	0.0167										
		Interoffice Channel in combination-4W 56 kbps-Facility Termination			UNCDX	U1TD5	16.76	40.63	27.47	16.77	6.91						
		Interoffice Channel in combination-4W 64 kbps-per mile			UNCDX	1L5XX	0.0167										
		Interoffice Channel in combination-4W 64 kbps-Facility Termination			UNCDX	U1TD6	16.76	40.63	27.47	16.77	6.91						
		Interoffice Channel in combination-DS1-per mile			UNC1X	1L5XX	0.3415										
		Interoffice Channel in combination-DS1 Facility Termination			UNC1X	U1TF1	77.14	89.47	81.99	16.39	14.48						
		Interoffice Channel in combination-DS3-per mile			UNC3X	1L5XX	8.02										
		Interoffice Channel in combination-DS3-Facility Termination			UNC3X	U1TF3	880.65	279.37	163.12	60.33	58.59						
		Interoffice Channel in combination-STS-1-per mile			UNCSX	1L5XX	8.02										
		Interoffice Channel in combination-STS-1 Facility Termination			UNCSX	U1TFS	880.55	279.37	163.12	60.33	58.59						
ADDITIONAL NETWORK ELEMENTS																	
	Optional Features & Functions:																
		Clear Channel Capability Extended Frame Option-per DS1	I		U1TD1, ULDD1,UNC1X	CCOEF		0.00	0.00	0.00	0.00						
		Clear Channel Capability Super FrameOption-per DS1	I		U1TD1, ULDD1,UNC1X	CCOSF		0.00	0.00	0.00	0.00						
		Clear Channel Capability (SF/ESF) Option-Subsequent Activity-per DS1	I		ULDD1, U1TD1, UNC1X, USL	NRCCC		185.26	23.86	1.99	0.78						

CATEGORY	RATE ELEMENTS	Interim	Zone	BCS	USOC	RATES($)					Svc Order Submitted Elec per LSR	Svc Order Submitted Manually per LSR	Incremental Charge - Manual Svc Order vs. Electronic-1st	Incremental Charge - Manual Svc Order vs. Electronic-Add'l	Incremental Charge - Manual Svc Order vs. Electronic-Disc 1st	Incremental Charge - Manual Svc Order vs. Electronic-Disc Add'l
							Nonrecurring		NRC Disconnect		OSS Rates($)					
						Rec	First	Add'l	First	Add'l	SOMEC	SOMAN	SOMAN	SOMAN	SOMAN	SOMAN
	C-bit Parity Option-Subsequent Activity-per DS3	i		U1TD3, ULDD3, UE3, UNC3X	NRCC3		219.58	7.69	0.737	0.00						
	DS1/DS0 Channel System			UNC1X	MQ1	107.57	91.24	62.71	10.56	9.81						
	DS3/DS1Channel System			UNC3X	MQ3	144.02	178.54	94.18	33.33	31.90						
	VG COCI in combination			UNCVX	1D1VG	0.56	6.59	4.73								
	VG COCI-for Local Loop			UEA	1D1VG	0.56	6.59	4.73								
	VG COCI-for connection to a channelized DS1 Local Channel in the same SWC as collocation			U1TUC	1D1VG	0.56	6.59	4.73								
	OCU-DP COCI (2.4-64kbs) in combination			UNCDX	1D1DD	1.19	6.59	4.73								
	OCU-DP COCI (2.4-64kbs)-for Local Loop			UDL	1D1DD	1.19	6.59	4.73								
	OCU-DP COCI (2.4-64kbs)-for connection to a channelized DS1 Local Channel in the same SWC as collocation			U1TUD	1D1DD	1.19	6.59	4.73								
	2W ISDN COCI (BRITE) in combination			UNCNX	UC1CA	2.56	6.59	4.73								
	2W ISDN COCI (BRITE)-for Local Loop			UDN	UC1CA	2.56	6.59	4.73								
	2W ISDN COCI (BRITE)-for connection to a channelized DS1 Local Channel in the same SWC as collocation			U1TUB	UC1CA	2.56	6.59	4.73								
	DS1 COCI in combination			UNC1X	UC1D1	8.64	6.59	4.73								
	DS1 COCI-for Local Loop			USL	UC1D1	8.64	6.59	4.73								
	DS1 COCI-for connection to a channelized DS1 Local Channel in the same SWC as collocation			U1TUA	UC1D1	8.64	6.59	4.73								
	DS1 COCI-for Interoffice Channel			U1TD1	UC1D1	8.64	6.59	4.73								
	DS1 COCI-for Local Channel			ULDD1	UC1D1	8.64	6.59	4.73								
	Wholesale to UNE, Switch-As-Is Conversion Charge			UNCVX, U1TVX, UNCDX, U1TDX, UNC1X, U1TD1,UNC3X, U1TD3, UNCSX, U1TS1, UDF,UDFCX	UNCCC		5.61	5.61								
	Unbundled Misc Rate Element, SNE SAI, Single Network Element-Switch As Is Non-recurring Charge, per circuit (LSR)	I		U1TVX, U1TDX, U1TD1, U1TD3, U1TS1, UDF, UE3	URESL		36.69	16.06								
	Unbundled Misc Rate Element, SNE SAI, Single Network Element-Switch As Is Non-recurring Charge, incremental charge per circuit on a spreadsheet	i		U1TVX, U1TDX, U1TD1, U1TD3, U1TS1, UDF, UE3	URESP		1.48	1.48								
	UNE Reconfiguration Change Charge per Circuit	I		UNC1X	URERC		35.00	35.00								
	UNE Reconfiguration Change Charge per Circuit Project Managed	I		UNC1X	URERP		1.48	1.48								
Access to DCS - Customer Reconfiguration (FlexServ)																
	Customer Reconfiguration Establishment						1.48		1.85							
	DS1 DCS Termination with DS0 Switching					27.96	25.60	19.70	16.67	13.41						
	DS1 DCS Termination with DS1 Switching					12.67	18.51	12.61	12.24	8.98						
	DS3 DCS Termination with DS1 Switching					176.51	25.60	19.70	16.67	13.41						
Node (SynchroNet)																
	Node per month			UNCDX	UNCNT	14.55										
Service Rearrangements																
	NRC-Change in Facility Assignment per circuit Service Rearrangement	I		U1TVX, U1TDX, UEA, UDL, U1TUC, U1TUD, U1TUB, ULDVX, ULDDX, UNCVX, UNCDX, UNC1X	URETD		101.30	43.13								
	NRC-Change in Facility Assignment per circuit Project Management (added to CFA per circuit if project managed)	I		U1TVX, U1TDX, UEA, UDL, U1TUC, U1TUD, U1TUB, ULDVX, ULDDX, UNCVX, UNCDX, UNC1X	URETB		1.28	1.28								
	NRC-Order Coordination Specific Time-Dedicated Transport	I		UNC1X	OCOSR		18.90	18.90								
COMMINGLING																

UNBUNDLED NETWORK ELEMENTS - South Carolina														Attachment: 2 Exh A			
CATEGORY		RATE ELEMENTS	Interim	Zone	BCS	USOC	RATES($)					Svc Order Submitted Elec per LSR	Svc Order Submitted Manually per LSR	Incremental Charge - Manual Svc Order vs. Electronic-1st	Incremental Charge - Manual Svc Order vs. Electronic-Add'l	Incremental Charge - Manual Svc Order vs. Electronic-Disc 1st	Incremental Charge - Manual Svc Order vs. Electronic-Disc Add'l
								Nonrecurring		NRC Disconnect		OSS Rates($)					
							Rec	First	Add'l	First	Add'l	SOMEC	SOMAN	SOMAN	SOMAN	SOMAN	SOMAN
		Commingling Authorization			UNCVX, UNCDX, UNC1X, UNC3X, UNCSX, U1TD1, U1TD3, U1TS1, UE3, UDLSX, U1TVX, U1TDX, U1TUB, ULDVX, ULDD1, ULDD3, ULDS1	CMGAU	0.00	0.00	0.00	0.00	0.00						
	Commingled (UNE part of single bandwidth circuit)																
		Commingled VG COCI			XDV2X, NTCVG	1D1VG	0.56	6.59	4.73								
		Commingled Digital COCI			XDV6X, NTCUD	1D1DD	1.19	6.59	4.73								
		Commingled ISDN COCI			XDD4X	UC1CA	2.56	6.59	4.73								
		Commingled 2W VG Interoffice Channel Facility Termination			XDV2X	U1TV2	24.30	40.63	27.47	16.77	6.91						
		Commingled 4W VG Interoffice Channel Facility Termination			XDV6X	U1TV4	21.29	40.63	27.47	16.77	6.91						
		Commingled 56kbps Interoffice Channel Facility Termination			XDD4X	U1TD5	16.76	40.63	27.47	16.77	6.91						
		Commingled 64kbps Interoffice Channel Facility Termination			XDD4X	U1TD6	16.76	40.63	27.47	16.77	6.91						
		Commingled VG/DS0 Interoffice Channel per mile			XDV2X, XDV6X, XDD4X	1L5XX	0.0167										
		Commingled 2W Local Loop Zone 1		1	XDV2X	UEAL2	16.68	105.98	68.43	53.05	10.61						
		Commingled 2W Local Loop Zone 2		2	XDV2X	UEAL2	23.13	105.98	68.43	53.05	10.61						
		Commingled 2W Local Loop Zone 3		3	XDV2X	UEAL2	28.46	105.98	68.43	53.05	10.61						
		Commingled 4W Local Loop Zone 1		1	XDV6X	UEAL4	32.59	132.38	94.83	59.35	14.61						
		Commingled 4W Local Loop Zone 2		2	XDV6X	UEAL4	43.89	132.38	94.83	59.35	14.61						
		Commingled 4W Local Loop Zone 3		3	XDV6X	UEAL4	43.38	132.38	94.83	59.35	14.61						
		Commingled 56kbps Local Loop Zone 1		1	XDD4X	UDL56	29.93	126.66	89.12	59.35	14.61						
		Commingled 56kbps Local Loop Zone 2		2	XDD4X	UDL56	33.99	126.66	89.12	59.35	14.61						
		Commingled 56kbps Local Loop Zone 3		3	XDD4X	UDL56	34.74	126.66	89.12	59.35	14.61						
		Commingled 64kbps Local Loop Zone 1		1	XDD4X	UDL64	29.93	126.66	89.12	59.35	14.61						
		Commingled 64kbps Local Loop Zone 2		2	XDD4X	UDL64	33.99	126.66	89.12	59.35	14.61						
		Commingled 64kbps Local Loop Zone 3		3	XDD4X	UDL64	34.74	126.66	89.12	59.35	14.61						
		Commingled ISDN Local Loop Zone 1		1	XDD4X	U1L2X	25.21	117.58	80.03	53.05	10.61						
		Commingled ISDN Local Loop Zone 2		2	XDD4X	U1L2X	32.76	117.58	80.03	53.05	10.61						
		Commingled ISDN Local Loop Zone 3		3	XDD4X	U1L2X	37.70	117.58	80.03	53.05	10.61						
		Commingled DS1 COCI			XDH1X, NTCD1	UC1D1	8.64	6.59	4.73								
		Commingled DS1 Interoffice Channel Facility Termination			XDH1X	U1TF1	77.14	89.47	81.99	16.39	14.48						
		Commingled DS1 Interoffice Channel per mile			XDH1X	1L5XX	0.3415										
		Commingled DS1/DS0 Channel System			XDH1X	MQ1	107.57	91.24	62.71	10.56	9.81						
		Commingled DS1 Local Loop Zone 1		1	XDH1X	USLXX	79.51	253.03	157.89	44.80	11.73						
		Commingled DS1 Local Loop Zone 2		2	XDH1X	USLXX	136.00	253.03	157.89	44.80	11.73						
		Commingled DS1 Local Loop Zone 3		3	XDH1X	USLXX	229.15	253.03	157.89	44.80	11.73						
		Commingled DS3 Local Loop Facility Termination			HFQC6	UE3PX	306.36	452.52	264.53	119.75	83.77						
		Commingled DS3/STS-1 Local Loop per mile			HFQC6, HFRST	1L5ND	12.26										
		Commingled STS-1 Local Loop Facility Termination			HFRST	UDLS1	313.49	452.52	264.53	119.75	83.77						
		Commingled DS3/DS1 Channel System			HFQC6	MQ3	144.02	178.54	94.18	33.33	31.90						
		Commingled DS3 Interoffice Channel Facility Termination			HFQC6	U1TF3	880.65	279.37	163.12	60.33	58.59						
		Commingled DS3 Interoffice Channel per mile			HFQC6	1L5XX	8.02										
		Commingled STS-1Interoffice Channel Facility Termination			HFRST	U1TFS	880.55	279.37	163.12	60.33	58.59						
		Commingled STS-1Interoffice Channel per mile			HFRST	1L5XX	8.02										
		Commingled Dark Fiber-Interoffice Transport, Per Four Fiber Strands, Per Route Mile Or Fraction Thereof			HEQDL	1L5DF	36.41										
		Commingled Dark Fiber-Interoffice Transport, Per Four Fiber Strands, Per Route Mile Or Fraction Thereof			HEQDL	UDF14		640.51	138.17	317.76	198.11						
SIGNALING (CCS7)																	
	NOTE:"bk" beside a rate indicates that the parties have agreed to bill and keep for that element pursuant to the terms and conditions in Attachment 3.																
		CCS7 Signaling Usage, Per TCAP Message					0.0000692bk										
		CCS7 Signaling Usage, Per ISUP Message					0.0000173bk										
LNP Query Service																	
		LNP Charge Per query					0.0008837										

UNBUNDLED NETWORK ELEMENTS - South Carolina														Attachment: 2 Exh A			
CATEGORY	RATE ELEMENTS	Interim	Zone	BCS	USOC	RATES($)					Svc Order Submitted Elec per LSR	Svc Order Submitted Manually per LSR	Incremental Charge - Manual Svc Order vs. Electronic-1st	Incremental Charge - Manual Svc Order vs. Electronic-Add'l	Incremental Charge - Manual Svc Order vs. Electronic-Disc 1st	Incremental Charge - Manual Svc Order vs. Electronic-Disc Add'l
							Nonrecurring		NRC Disconnect				OSS Rates($)			
						Rec	First	Add'l	First	Add'l	SOMEC	SOMAN	SOMAN	SOMAN	SOMAN	SOMAN
	LNP Service Establishment Manual						25.09	25.09	23.07	23.07						
	LNP Service Provisioning with Point Code Establishment						594.82	303.88	269.53	198.18						
911 PBX LOCATE																
911 PBX LOCATE DATABASE CAPABILITY																
	Service Establishment per CLEC per End User Account			9PBDC	9PBEU		1,813.00									
	Changes to TN Range or Customer Profile			9PBDC	9PBTN		181.40									
	Per Telephone Number (Monthly)			9PBDC	9PBMM	0.07										
	Change Company (Service Provider) ID			9PBDC	9PBPC		532.48									
	PBX Locate Service Support per CLEC (Monthlt)			9PBDC	9PBMR	181.29										
	Service Order Charge			9PBDC	9PBSC		15.69									
911 PBX LOCATE TRANSPORT COMPONENT																
See Att 3																
Note: Rates displaying an "I" in Interim column are interim as a result of a Commission order.																
UNBUNDLED LOCAL EXCHANGE SWITCHING(PORTS)																
The Exchange Switching Port Rates Reflected Here Apply to Embedded Base Switching Ports as of March 10, 2005 and Consist of the TELRIC Cost Based Rates Plus $1.00 in Accordance with the TRRO.																
Exchange Ports																
NOTE: Although the Port Rate includes all available features in GA, KY, LA & TN, the desired features will need to be ordered using retail USOCs																
2-WIRE VOICE GRADE LINE PORT RATES (RES)																
	Exchange Ports-2W Analog Line Port- Res.			UEPSR	UEPRL	2.65	2.38	2.28	1.42	1.33						
	Exchange Ports-2W Analog Line Port with Caller ID-Res.			UEPSR	UEPRC	2.65	2.38	2.28	1.42	1.33						
	Exchange Ports-2W Analog Line Port outgoing only-Res.			UEPSR	UEPRO	2.65	2.38	2.28	1.42	1.33						
	Exchange Ports-2W VG unbundled SC extended local dialing parity Port with Caller ID-Res.			UEPSR	UEPAU	2.65	2.38	2.28	1.42	1.33						
	Exchange Ports-2W VG unbundled SC Area Calling port with Caller ID-Res (LW8)			UEPSR	UEPAJ	2.65	2.38	2.28	1.42	1.33						
	Exchange Ports-2W VG unbundled res, low usage line port with Caller ID (LUM)			UEPSR	UEPAP	2.65	2.38	2.28	1.42	1.33						
	Exchange Ports-2W VG SC Residence Dialing Plan w/o Caller ID			UEPSR	UEPWL	2.65	2.38	2.28	1.42	1.33						
	Exchange Ports-2W VG SC Residence Area Calling Plan w/o Caller ID capability			UEPSR	UEPRS	2.65	2.38	2.28	1.42	1.33						
	2W voice unbundled Low Usage Line Port w/o Caller ID Capability			UEPSR	UEPRT	2.65	2.38	2.28	1.42	1.33						
	Subsequent Activity			UEPSR	USASC	0.00	0.00	0.00								
FEATURES																
	All Available Vertical Features			UEPSR	UEPVF	3.04	0.00	0.00								
2-WIRE VOICE GRADE LINE PORT RATES (BUS)																
	Exchange Ports-2W Analog Line Port w/o Caller ID-Bus			UEPSB	UEPBL	2.65	2.38	2.28	1.42	1.33						
	Exchange Ports-2W VG unbundled Line Port with unbundled port with Caller+E484 ID-Bus.			UEPSB	UEPBC	2.65	2.38	2.28	1.42	1.33						
	Exchange Ports-2W Analog Line Port outgoing only-Bus.			UEPSB	UEPBO	2.65	2.38	2.28	1.42	1.33						
	Exchange Ports-2W VG unbundled SC extended local dialing parity Port with Caller ID-Bus.			UEPSB	UEPAZ	2.65	2.38	2.28	1.42	1.33						
	Exhange Ports-2W VG unbundled incoming only port with Caller ID-Bus			UEPSB	UEPB1	2.65	2.38	2.28	1.42	1.33						
	Exchange Ports-2W VG unbundled SC Bus Area Calling Port with Caller ID-Bus (LMB)			UEPSB	UEPAB	2.65	2.38	2.28	1.42	1.33						
	Exchange Ports-2W Voice SC Business Dialing Plan w/o Caller ID			UEPSB	UEPWM	2.65	2.38	2.28	1.42	1.33						
	Exchange Ports-2W Voice SC Business Area Calling Port w/o Caller ID			UEPSB	UEPBB	2.65	2.38	2.28	1.42	1.33						
	2W voice unbundled Incoming Only Port w/o Caller ID Capability			UEPSB	UEPBE	2.65	2.38	2.28	1.42	1.33						
	Subsequent Activity			UEPSB	USASC	0.00	0.00	0.00								
FEATURES																
	All Available Vertical Features			UEPSB	UEPVF	3.04	0.00	0.00								
	All Available Vertical Features					3.04	0.00	0.00								
EXCHANGE PORT RATES (DID & PBX)																
	2W VG Unbundled 2-Way PBX Trunk-Res			UEPSE	UEPRD	2.65	31.34	14.88	13.97	0.90						
	2W VG Line Side Unbundled 2-Way PBX Trunk-Bus			UEPSP	UEPPC	2.65	31.34	14.88	13.97	0.90						
	2W VG Line Side Unbundled Outward PBX Trunk-Bus			UEPSP	UEPPO	2.65	31.34	14.88	13.97	0.90						
	2W VG Line Side Unbundled Incoming PBX Trunk-Bus			UEPSP	UEPP1	2.65	31.34	14.88	13.97	0.90						

CATEGORY	RATE ELEMENTS	Interim	Zone	BCS	USOC	RATES($)					Svc Order Submitted Elec per LSR	Svc Order Submitted Manually per LSR	Incremental Charge - Manual Svc Order vs. Electronic-1st	Incremental Charge - Manual Svc Order vs. Electronic-Add'l	Incremental Charge - Manual Svc Order vs. Electronic-Disc 1st	Incremental Charge - Manual Svc Order vs. Electronic-Disc Add'l
							Nonrecurring		NRC Disconnect		OSS Rates($)					
						Rec	First	Add'l	First	Add'l	SOMEC	SOMAN	SOMAN	SOMAN	SOMAN	SOMAN
	2W Analog Long Distance Terminal PBX Trunk-Bus			UEPSP	UEPLD	2.65	31.34	14.88	13.97	0.90						
	2W Voice Unbundled PBX LD Terminal Ports			UEPSP	UEPLD	2.65	31.34	14.88	13.97	0.90						
	2W Vice Unbundled 2-Way PBX Usage Port			UEPSP	UEPXA	2.65	31.34	14.88	13.97	0.90						
	2W Voice Unbundled PBX Toll Terminal Hotel Ports			UEPSP	UEPXB	2.65	31.34	14.88	13.97	0.90						
	2W Voice Unbundled PBX LD DDD Terminals Port			UEPSP	UEPXC	2.65	31.34	14.88	13.97	0.90						
	2W Voice Unbundled PBX LD Terminal Switchboard Port			UEPSP	UEPXD	2.65	31.34	14.88	13.97	0.90						
	2W Voice Unbundled PBX LD Terminal Switchboard IDD Capable Port			UEPSP	UEPXE	2.65	31.34	14.88	13.97	0.90						
	2W Voice Unbundled 2-Way PBX Hotel/Hospital Economy Administrative Calling Port			UEPSP	UEPXL	2.65	31.34	14.88	13.97	0.90						
	2W Voice Unbundled 2-Way PBX Hotel/Hospital Economy Rm Calling Port			UEPSP	UEPXM	2.65	31.34	14.88	13.97	0.90						
	2W Voice Unbundled 1-Way Outgoing PBX Hotel/Hospital Discount Rm Calling Port			UEPSP	UEPXO	2.65	31.34	14.88	13.97	0.90						
	2W Voice Unbundled 1-Way Outgoing PBX Measured Port			UEPSP	UEPXS	2.65	31.34	14.88	13.97	0.90						
	2W Voice Unbundled 2-Way PBX SC Area Plus Calling Port			UEPSP	UEPXT	2.65	31.34	14.88	13.97	0.90						
	Subsequent Activity			UEPSP	USASC	0.00	0.00	0.00								
FEATURES																
	All Available Vertical Features			UEPSP UEPSE	UEPVF	3.04	0.00	0.00								
Local Switching Features offered with Port																
NOTE: Transmission/usage charges associated with POTS circuit switched usage will also apply to circuit switched voice and/or circuit switched data transmission by B-Channels associated with 2-wire ISDN ports.																
NOTE: Access to B Channel or D Channel Packet capabilities will be available only through BFR/New Business Request Process. Rates for the packet capabilities will be determined via the Bona Fide Request/New Business Request Process.																
2-WIRE VOICE GRADE LINE PORT RATES (DID)																
	Exchange Ports-2W DID Port			UEPEX	UEPP2	9.86	119.57	18.78	60.03	3.77						
2-WIRE VOICE GRADE LINE PORT RATES (ISDN-BRI)																
	Exchange Ports-2W ISDN Port (See Notes below.)			UEPTX, UEPSX	U1PMA	14.38	72.93	53.11	47.90	10.76						
	All Features Offered			UEPTX, UEPSX	UEPVF	3.04	0.00	0.00								
	Exchange Ports-2W ISDN Port -- Channel Profiles			UEPTX, UEPSX	U1UMA	0.00	0.00	0.00								
NOTE: Transmission/usage charges associated with POTS circuit switched usage will also apply to circuit switched voice and/or circuit switched data transmission by B-Channels associated with 2-wire ISDN ports.																
NOTE: Access to B Channel or D Channel Packet capabilities will be available only through BFR/New Business Request Process. Rates for the packet capabilities will be determined via the Bona Fide Request/New Business Request Process.																
UNBUNDLED PORT with REMOTE CALL FORWARDING CAPABILITY																
UNBUNDLED REMOTE CALL FORWARDING SERVICE - RESIDENCE																
	Unbundled Remote Call Forwarding Service, Area Calling, Res			UEPVR	UERAC	2.65	2.38	2.28	1.42	1.33						
	Unbundled Remote Call Forwarding Service, Local Calling-Res			UEPVR	UERLC	2.65	2.38	2.28	1.42	1.33						
	Unbundled Remote Call Forwarding Service, InterLATA-Res			UEPVR	UERTE	2.65	2.38	2.28	1.42	1.33						
	Unbundled Remote Call Forwarding Service, IntraLATA-Res			UEPVR	UERTR	2.65	2.38	2.28	1.42	1.33						
Non-Recurring																
	Unbundled Remote Call Forwarding Service -Conversion-Switch-as-is			UEPVR	USAC2		0.10	0.10								
	Unbundled Remote Call Forwarding Service -Conversion with allowed change (PIC and LPIC)			UEPVR	USACC		0.10	0.10								
UNBUNDLED REMOTE CALL FORWARDING - Bus																
	Unbundled Remote Call Forwarding Service, Area Calling-Bus			UEPVB	UERAC	2.65	2.38	2.28	1.42	1.33						
	Unbundled Remote Call Forwarding Service, Local Calling-Bus			UEPVB	UERLC	2.65	2.38	2.28	1.42	1.33						
	Unbundled Remote Call Forwarding Service, InterLATA-Bus			UEPVB	UERTE	2.65	2.38	2.28	1.42	1.33						
	Unbundled Remote Call Forwarding Service, IntraLATA-Bus			UEPVB	UERTR	2.65	2.38	2.28	1.42	1.33						
	Unbundled Remote Call Forwarding Service Expanded and Exception Local Calling			UEPVB	UERVJ	2.65	2.38	2.28	1.42	1.33						
Non-Recurring																
	Unbundled Remote Call Forwarding Service-Conversion-Switch-as-is			UEPVB	USAC2		0.10	0.10								
	Unbundled Remote Call Forwarding Service -Conversion with allowed change (PIC and LPIC)			UEPVB	USACC		0.10	0.10								
UNBUNDLED LOCAL SWITCHING, PORT USAGE																
End Office Switching (Port Usage)																
	End Office Switching Function, Per MOU					0.0010519										
	End Office Trunk Port-Shared, Per MOU					0.0002136										
Tandem Switching (Port Usage) (Local or Access Tandem)																
	Tandem Switching Function Per MOU					0.0001634										
	Tandem Trunk Port-Shared, Per MOU					0.0002863										
	Tandem Switching Function Per MOU (Melded)					0.00004951										

UNBUNDLED NETWORK ELEMENTS - South Carolina														Attachment: 2 Exh A			
CATEGORY	RATE ELEMENTS	Interim	Zone	BCS	USOC	RATES($)					Svc Order Submitted Elec per LSR	Svc Order Submitted Manually per LSR	Incremental Charge - Manual Svc Order vs. Electronic-1st	Incremental Charge - Manual Svc Order vs. Electronic-Add'l	Incremental Charge - Manual Svc Order vs. Electronic-Disc 1st	Incremental Charge - Manual Svc Order vs. Electronic-Disc Add'l
							Nonrecurring		NRC Disconnect		OSS Rates($)					
						Rec	First	Add'l	First	Add'l	SOMEC	SOMAN	SOMAN	SOMAN	SOMAN	SOMAN
	Tandem Trunk Port-Shared, Per MOU (Melded)					0.000086749										
	Melded Factor: 30.30% of the Tandem Rate															
	Common Transport															
	Common Transport-Per Mile, Per MOU					0.0000045										
	Common Transport-Facilities Termination Per MOU					0.0004095										
UNBUNDLED PORT/LOOP COMBINATIONS - COST BASED RATES																
	>Cost Based Rates are applied where BellSouth is required by FCC and/or State Commission rule to provide Unbundled Local Switching or Switch Ports.															
	>The UNE-P Switching Port Rates Reflected in the Cost Based Section Apply to Embedded Base UNE-Ps as of March 10, 2005 and Consist of the TELRIC Cost Based Rates Plus $1.00 in Accordance with the TRRO.															
	>Features shall apply to the Unbundled Port/Loop Combination - Cost Based Rate section in the same manner as they are applied to the Stand-Alone Unbundled Port section of this Rate Exhibit.															
	>End Office and Tandem Switching Usage and Common Transport Usage rates in the Port section of this rate exhibit shall apply to all combinations of loop/port network elements except for UNE Coin Port/Loop Combinations.															
	>The first and additional Port nonrecurring charges apply to Not Currently Combined Combos. For Currently Combined Combos the nonrecurring charges shall be those identified in the Nonrecurring - Currently Combined sections.															
	2-WIRE VOICE GRADE LOOP WITH 2-WIRE LINE PORT (RES)															
	UNE Port/Loop Combination Rates															
	2W VG Loop/Port Combo-Zone 1					15.89										
	2W VG Loop/Port Combo-Zone 2					22.52										
	2W VG Loop/Port Combo-Zone 3					28.17										
	UNE Loop Rates															
	2W VG Loop (SL1)-Zone 1		1	UEPRX	UEPLX	13.76										
	2W VG Loop (SL1)-Zone 2		2	UEPRX	UEPLX	20.38										
	2W VG Loop (SL1)-Zone 3		3	UEPRX	UEPLX	26.04										
	2-Wire Voice Grade Line Port Rates (Res)															
	2W voice unbundled port-residence			UEPRX	UEPRL	2.13	40.30	19.90	24.98	6.65						
	2W voice unbundled port with Caller ID-res			UEPRX	UEPRC	2.13	40.30	19.90	24.98	6.65						
	2W voice unbundled port outgoing only-res			UEPRX	UEPRO	2.13	40.30	19.90	24.98	6.65						
	2W VG unbundled SC extended local dialing parity port with Caller ID-res			UEPRX	UEPAU	2.13	40.30	19.90	24.98	6.65						
	2W voice unbundled SC Area Calling port with Caller ID-res (LW8)			UEPRX	UEPAJ	2.13	40.30	19.90	24.98	6.65						
	2W voice unbundles res, low usage line port with Caller ID (LUM)			UEPRX	UEPAP	2.13	37.93	16.72								
	2W Voice Unbundled SC Residence Dialing Plan w/o Caller ID			UEPRX	UEPWL	2.13	40.30	19.90	24.98	6.65						
	2W voice unbundled SC Area Calling Port w/o Caller ID Capability			UEPRX	UEPRS	2.13	40.30	19.90	24.98	6.65						
	2W voice unbundled Low Usage Line Port w/o Caller ID Capability			UEPRX	UEPRT	2.13	40.30	19.90	24.98	6.65						
	FEATURES															
	All Features Offered			UEPRX	UEPVF	3.04	0.00	0.00								
	NONRECURRING CHARGES (NRCs) - CURRENTLY COMBINED															
	2W VG Loop/Line Port Combination-Conversion-Switch-as-is			UEPRX	USAC2		0.10	0.10								
	2W VG Loop/Line Port Combination -Conversion-Switch with change			UEPRX	USACC		0.10	0.10								
	2W VG Loop/Line Port Platform-Installation Charge at QuickService location-Not Conversion of Existing Service			UEPRX	URECC		0.10									
	ADDITIONAL NRCs															
	2W VG Loop/Line Port Combination-Subsequent Activity			UEPRX	USAS2	0.00	0.00	0.00								
	Unbundled Misc Rate Element, Tag Loop at End User Premise			UEPRX	URETL		8.33	0.83								
	OFF/ON PREMISES EXTENSION CHANNELS															
	2W Analog VG Extension Loop – Non-Design		1	UEPRX	UEAEN	14.94	37.92	17.62	23.56	5.32						
	2W Analog VG Extension Loop – Non-Design		2	UEPRX	UEAEN	21.39	37.92	17.62	23.56	5.32						
	2W Analog VG Extension Loop – Non-Design		3	UEPRX	UEAEN	26.72	37.92	17.62	23.56	5.32						
	2W Analog VG Extension Loop – Design		1	UEPRX	UEAED	16.68	105.98	68.43	53.05	10.61						
	2W Analog VG Extension Loop – Design		2	UEPRX	UEAED	23.13	105.98	68.43	53.05	10.61						
	2W Analog VG Extension Loop – Design		3	UEPRX	UEAED	28.46	105.98	68.43	53.05	10.61						
	INTEROFFICE TRANSPORT															
	Interoffice Transport-Dedicated-2W VG-Facility Termination			UEPRX	U1TV2	24.30	40.63	27.47	16.77	6.91						
	Interoffice Transport-Dedicated-2W VG-Per Mile or Fraction Mile			UEPRX	U1TVM	0.0167	0.00	0.00								
	2-WIRE VOICE GRADE LOOP WITH 2-WIRE LINE PORT (BUS)															
	UNE Port/Loop Combination Rates															
	2W VG Loop/Port Combo-Zone 1					15.89										
	2W VG Loop/Port Combo-Zone 2					22.52										
	2W VG Loop/Port Combo-Zone 3					28.17										
	UNE Loop Rates															
	2W VG Loop (SL1)-Zone 1		1	UEPBX	UEPLX	13.76										
	2W VG Loop (SL1)-Zone 2		2	UEPBX	UEPLX	20.38										

CATEGORY	RATE ELEMENTS	Interim	Zone	BCS	USOC	RATES($)					Svc Order Submitted Elec per LSR	Svc Order Submitted Manually per LSR	Incremental Charge - Manual Svc Order vs. Electronic-1st	Incremental Charge - Manual Svc Order vs. Electronic-Add'l	Incremental Charge - Manual Svc Order vs. Electronic-Disc 1st	Incremental Charge - Manual Svc Order vs. Electronic-Disc Add'l
							Nonrecurring		NRC Disconnect		OSS Rates($)					
						Rec	First	Add'l	First	Add'l	SOMEC	SOMAN	SOMAN	SOMAN	SOMAN	SOMAN
	2W VG Loop (SL1)-Zone 3		3	UEPBX	UEPLX	26.04										
2-Wire Voice Grade Line Port (Bus)																
	2W voice unbundled port w/o Caller ID-bus			UEPBX	UEPBL	2.13	40.30	19.90	24.98	6.65						
	2W voice unbundled port with Caller + E484 ID-bus			UEPBX	UEPBC	2.13	40.30	19.90	24.98	6.65						
	2W voice unbundled port outgoing only-bus			UEPBX	UEPBO	2.13	40.30	19.90	24.98	6.65						
	2W VG unbundled SC extended local dialing parity port with Caller ID-bus			UEPBX	UEPAZ	2.13	40.30	19.90	24.98	6.65						
	2W voice unbundled incoming only port with Caller ID-Bus			UEPBX	UEPB1	2.13	40.30	19.90	24.98	6.65						
	2W voice unbundled SC Bus Area Calling Port with Caller ID (LMB)			UEPBX	UEPAB	2.13	40.30	19.90	24.98	6.65						
	2W Voice Unbundled SC Business Dialing Plan w/o Caller ID			UEPBX	UEPWM	2.13	40.30	19.90	24.98	6.65						
	2W voice unbundled SC Business Area Calling Port w/o Caller ID Capability			UEPBX	UEPBB	2.13	40.30	19.90	24.98	6.65						
	2W voice unbundled Incoming Only Port w/o Caller ID Capability			UEPBX	UEPBE	2.13	40.30	19.90	24.98	6.65						
FEATURES																
	All Features Offered			UEPBX	UEPVF	3.04	0.00	0.00								
NONRECURRING CHARGES (NRCs) - CURRENTLY COMBINED																
	2W VG Loop/Line Port Combination-Conversion-Switch-as-is			UEPBX	USAC2		0.10	0.10								
	2W VG Loop/Line Port Combination -Conversion-Switch with change			UEPBX	USACC		0.10	0.10								
ADDITIONAL NRCs																
	2W VG Loop/Line Port Combination-Subsequent Activity			UEPBX	USAS2		0.00	0.00								
	Unbundled Misc Rate Element, Tag Loop at End User Premise			UEPBX	URETL		8.33	0.83								
OFF/ON PREMISES EXTENSION CHANNELS																
	2W Analog VG Extension Loop – Non-Design		1	UEPBX	UEAEN	14.94	37.92	17.62	23.56	5.32						
	2W Analog VG Extension Loop – Non-Design		2	UEPBX	UEAEN	21.39	37.92	17.62	23.56	5.32						
	2W Analog VG Extension Loop – Non-Design		3	UEPBX	UEAEN	26.72	37.92	17.62	23.56	5.32						
	2W Analog VG Extension Loop – Design		1	UEPBX	UEAED	16.68	105.98	68.43	53.05	10.61						
	2W Analog VG Extension Loop – Design		2	UEPBX	UEAED	23.13	105.98	68.43	53.05	10.61						
	2W Analog VG Extension Loop – Design		3	UEPBX	UEAED	28.46	105.98	68.43	53.05	10.61						
INTEROFFICE TRANSPORT																
	Interoffice Transport-Dedicated-2W VG-Facility Termination			UEPBX	U1TV2	24.30	40.63	27.47	16.77	6.91						
	Interoffice Transport-Dedicated-2W VG-Per Mile or Fraction Mile			UEPBX	U1TVM	0.0167	0.00	0.00								
2-WIRE VOICE GRADE LOOP WITH 2-WIRE LINE PORT (RES - PBX)																
UNE Port/Loop Combination Rates																
	2W VG Loop/Port Combo-Zone 1					15.89										
	2W VG Loop/Port Combo-Zone 2					22.52										
	2W VG Loop/Port Combo-Zone 3					28.17										
UNE Loop Rates																
	2W VG Loop (SL 1)-Zone 1		1	UEPRG	UEPLX	13.76										
	2W VG Loop (SL 1)-Zone 2		2	UEPRG	UEPLX	20.38										
	2W VG Loop (SL 1)-Zone 3		3	UEPRG	UEPLX	26.04										
2-Wire Voice Grade Line Port Rates (RES - PBX)																
	2W VG Unbundled Combination 2-Way PBX Trunk Port-Res			UEPRG	UEPRD	2.13	69.26	32.50	37.53	6.22						
FEATURES																
	All Features Offered			UEPRG	UEPVF	3.04	0.00	0.00								
NONRECURRING CHARGES (NRCs) - CURRENTLY COMBINED																
	2W VG Loop/ Line Port Combination (PBX)-Conversion-Switch-As-Is			UEPRG	USAC2		7.93	1.91								
	2W VG Loop/ Line Port Combination (PBX)-Conversion-Switch with Change			UEPRG	USACC		7.93	1.91								
ADDITIONAL NRCs																
	2W VG Loop/ Line Port Combination (PBX)-Subsequent Activity			UEPRG	USAS2	0.00	0.00	0.00								
	PBX Subsequent Activity-Change/Rearrange Multiline Hunt Group						7.34	7.34								
	Unbundled Misc Rate Element, Tag Loop at End User Premise			UEPRG	URETL		8.33	0.83								
OFF/ON PREMISES EXTENSION CHANNELS																
	Local Channel VG, per termination		1	UEPRG	P2JHX	16.68	105.98	68.43	53.05	10.61						
	Local Channel VG, per termination		2	UEPRG	P2JHX	23.13	105.98	68.43	53.05	10.61						
	Local Channel VG, per termination		3	UEPRG	P2JHX	28.46	105.98	68.43	53.05	10.61						
	Non-Wire Direct Serve Channel VG		1	UEPRG	SDD2X	17.74	131.88	62.06	90.70	13.42						
	Non-Wire Direct Serve Channel VG		2	UEPRG	SDD2X	25.16	65.94	31.03	45.35	6.71						
	Non-Wire Direct Serve Channel VG		3	UEPRG	SDD2X	29.58	65.94	31.03	45.35	6.71						

CATEGORY	RATE ELEMENTS	Interim	Zone	BCS	USOC	RATES($)					Svc Order Submitted Elec per LSR	Svc Order Submitted Manually per LSR	Incremental Charge - Manual Svc Order vs. Electronic-1st	Incremental Charge - Manual Svc Order vs. Electronic-Add'l	Incremental Charge - Manual Svc Order vs. Electronic-Disc 1st	Incremental Charge - Manual Svc Order vs. Electronic-Disc Add'l
							Nonrecurring		NRC Disconnect		OSS Rates($)					
						Rec	First	Add'l	First	Add'l	SOMEC	SOMAN	SOMAN	SOMAN	SOMAN	SOMAN
INTEROFFICE TRANSPORT																
	Interoffice Transport-Dedicated-2W VG-Facility Termination			UEPRG	U1TV2	24.30	40.63	27.47	16.77	6.91						
	Interoffice Transport-Dedicated-2W VG-Per Mile or Fraction Mile			UEPRG	U1TVM	0.0167	0.00	0.00								
2-WIRE VOICE GRADE LOOP WITH 2-WIRE LINE PORT (BUS - PBX)																
UNE Port/Loop Combination Rates																
	2W VG Loop/Port Combo-Zone 1					15.89										
	2W VG Loop/Port Combo-Zone 2					22.52										
	2W VG Loop/Port Combo-Zone 3					28.17										
UNE Loop Rates																
	2W VG Loop (SL 1)-Zone 1		1	UEPPX	UEPLX	13.76										
	2W VG Loop (SL 1)-Zone 2		2	UEPPX	UEPLX	20.38										
	2W VG Loop (SL 1)-Zone 3		3	UEPPX	UEPLX	26.04										
2-Wire Voice Grade Line Port Rates (BUS - PBX)																
	Line Side Unbundled Combination 2-Way PBX Trunk Port-Bus			UEPPX	UEPPC	2.13	69.26	32.50	37.53	6.22						
	Line Side Unbundled Outward PBX Trunk Port-Bus			UEPPX	UEPPO	2.13	69.26	32.50	37.53	6.22						
	Line Side Unbundled Incoming PBX Trunk Port-Bus			UEPPX	UEPP1	2.13	69.26	32.50	37.53	6.22						
	2W Voice Unbundled PBX LD Terminal Ports			UEPPX	UEPLD	2.13	69.26	32.50	37.53	6.22						
	2W Voice Unbundled 2-Way Combination PBX Usage Port			UEPPX	UEPXA	2.13	69.26	32.50	37.53	6.22						
	2W Voice Unbundled PBX Toll Terminal Hotel Ports			UEPPX	UEPXB	2.13	69.26	32.50	37.53	6.22						
	2W Voice Unbundled PBX LD DDD Terminals Port			UEPPX	UEPXC	2.13	69.26	32.50	37.53	6.22						
	2W Voice Unbundled PBX LD Terminal Switchboard Port			UEPPX	UEPXD	2.13	69.26	32.50	37.53	6.22						
	2W Voice Unbundled PBX LD Terminal Switchboard IDD Capable Port			UEPPX	UEPXE	2.13	69.26	32.50	37.53	6.22						
	2W Voice Unbundled 2-Way PBX Hotel/Hospital Economy Administrative Calling Port			UEPPX	UEPXL	2.13	69.26	32.50	37.53	6.22						
	2W Voice Unbundled 2-Way PBX Hotel/Hospital Economy Rm Calling Port			UEPPX	UEPXM	2.13	69.26	32.50	37.53	6.22						
	2W Voice Unbundled 1-Way Outgoing PBX Hotel/Hospital Discount Rm Calling Port			UEPPX	UEPXO	2.13	69.26	32.50	37.53	6.22						
	2W Voice Unbundled 1-Way Outgoing PBX Measured Port			UEPPX	UEPXS	2.13	69.26	32.50	37.53	6.22						
	2W Voice Unbundled 2-Way PBX SC Area Plus Calling Port			UEPPX	UEPXT	2.13	69.26	32.50	37.53	6.22						
FEATURES																
	All Features Offered			UEPPX	UEPVF	3.04	0.00	0.00								
NONRECURRING CHARGES (NRCs) - CURRENTLY COMBINED																
	2W VG Loop/ Line Port Combination (PBX)-Conversion-Switch-As-Is			UEPPX	USAC2		7.93	1.91								
	2W VG Loop/ Line Port Combination (PBX)-Conversion-Switch with Change			UEPPX	USACC		7.93	1.91								
ADDITIONAL NRCs																
	2W VG Loop/ Line Port Combination (PBX)-Subsequent Activity			UEPPX	USAS2	0.00	0.00	0.00								
	PBX Subsequent Activity-Change/Rearrange Multiline Hunt Group						7.34	7.34								
	Unbundled Misc Rate Element, Tag Loop at End User Premise			UEPPX	URETL		8.33	0.83								
OFF/ON PREMISES EXTENSION CHANNELS																
	Local Channel VG, per termination		1	UEPPX	P2JHX	16.68	105.98	68.43	53.05	10.61						
	Local Channel VG, per termination		2	UEPPX	P2JHX	23.13	105.98	68.43	53.05	10.61						
	Local Channel VG, per termination		3	UEPPX	P2JHX	28.46	105.98	68.43	53.05	10.61						
	Non-Wire Direct Serve Channel VG		1	UEPPX	SDD2X	17.74	131.88	62.06	90.70	13.42						
	Non-Wire Direct Serve Channel VG		2	UEPPX	SDD2X	25.16	65.94	31.03	45.35	6.71						
	Non-Wire Direct Serve Channel VG		3	UEPPX	SDD2X	29.58	65.94	31.03	45.35	6.71						
INTEROFFICE TRANSPORT																
	Interoffice Transport-Dedicated-2W VG-Facility Termination			UEPPX	U1TV2	24.30	40.63	27.47	16.77	6.91						
	Interoffice Transport-Dedicated-2W VG-Per Mile or Fraction Mile			UEPPX	U1TVM	0.0167	0.00	0.00								
2-WIRE VOICE GRADE LOOP WITH 2-WIRE ANALOG LINE COIN PORT																
UNE Port/Loop Combination Rates																
	2W VG Coin Port/Loop Combo – Zone 1					15.89										
	2W VG Coin Port/Loop Combo – Zone 2					22.52										
	2W VG Coin Port/Loop Combo – Zone 3					28.17										
UNE Loop Rates																
	2W VG Loop (SL1)-Zone 1		1	UEPCO	UEPLX	13.76										
	2W VG Loop (SL1)-Zone 2		2	UEPCO	UEPLX	20.38										

UNBUNDLED NETWORK ELEMENTS - South Carolina														Attachment: 2 Exh A			
CATEGORY	RATE ELEMENTS	Interim	Zone	BCS	USOC	RATES($)					Svc Order Submitted Elec per LSR	Svc Order Submitted Manually per LSR	Incremental Charge - Manual Svc Order vs. Electronic-1st	Incremental Charge - Manual Svc Order vs. Electronic-Add'l	Incremental Charge - Manual Svc Order vs. Electronic-Disc 1st	Incremental Charge - Manual Svc Order vs. Electronic-Disc Add'l
							Nonrecurring		NRC Disconnect		OSS Rates($)					
						Rec	First	Add'l	First	Add'l	SOMEC	SOMAN	SOMAN	SOMAN	SOMAN	SOMAN
	2W VG Loop (SL1)-Zone 3		3	UEPCO	UEPLX	26.04										
2-Wire Voice Grade Line Ports (COIN)																
	2W Coin 2-Way w/o Operator Screening and w/o Blocking (SC)			UEPCO	UEPSD	2.13	40.30	19.90	24.98	6.65						
	2W Coin 2-Way with Operator Screening and Blocking: 011, 900/976, 1+DDD (SC)			UEPCO	UEPSA	2.13	40.30	19.90	24.98	6.65						
	2W Coin 2-Way with Operator Screening and 011 Blocking (SC)			UEPCO	UEPSH	2.13	40.30	19.90	24.98	6.65						
	2W Coin 2-Way with Operator Screening and 011 Blocking; with Dialing Parity (SC)			UEPCO	UEPSC	2.13	40.30	19.90	24.98	6.65						
	2W Coin 2-Way with Operator Screening and: 900 Blocking: 900/976, 1+DDD, 011+, and Local (SC)			UEPCO	UEPCC	2.13	40.30	19.90	24.98	6.65						
	2W Coin 2-W Operator Screen: 900 Block: 900/976, 1+DDD, 011+, Local; Enhanced Call OPT 3YV (SC)			UEPCO	UEPCE	2.13	40.30	19.90	24.98	6.65						
	2W Coin 2-W Operator Screen: 900 Block: 900/976, 1+DDD, 011+, Local; Enhanced Call OPT AP7 (SC)			UEPCO	UEPCF	2.13	40.30	19.90	24.98	6.65						
	2W Coin Outward w/o Blocking and w/o Operator Screening (SC)			UEPCO	UEPSG	2.13	40.30	19.90	24.98	6.65						
	2W Coin Outward with Operator Screening and 011 Blocking (SC)			UEPCO	UEPSF	2.13	40.30	19.90	24.98	6.65						
	2W Coin Outward with Operator Screening and Blocking: 011, 900/976, 1+DDD (SC)			UEPCO	UEPSJ	2.13	40.30	19.90	24.98	6.65						
	2W Coin Outward with Operator Screening and Blocking: 900/976, 1+DDD, 011+, and Local (SC)			UEPCO	UEPCM	2.13	40.30	19.90	24.98	6.65						
	2W Coin Out Operator Screen & Block: 900/976, 1+DDD, 011+, Local; Enhanced Calling OPT 3YW (SC)			UEPCO	UEPCP	2.13	40.30	19.90	24.98	6.65						
	2W 2-Way Smartline with 900/976 (all states except LA)			UEPCO	UEPCK	2.13	40.30	19.90	24.98	6.65						
	2W Coin Outward Smartline with 900/976 (all states except LA)			UEPCO	UEPCR	2.13	40.30	19.90	24.98	6.65						
ADDITIONAL UNE COIN PORT/LOOP (RC)																
	UNE Coin Port/Loop Combo Usage (Flat Rate)			UEPCO	URECU	4.05	0.00	0.00	0.00	0.00						
NONRECURRING CHARGES - CURRENTLY COMBINED																
	2W VG Loop/Line Port Combination -Conversion-Switch-as-is			UEPCO	USAC2		0.10	0.10								
	2W VG Loop/Line Port Combination -Conversion-Switch with change			UEPCO	USACC		0.10	0.10								
ADDITIONAL NRCs																
	2W VG Loop/Line Port Combination-Subsequent Activity			UEPCO	USAS2		0.00	0.00								
	Unbundled Misc Rate Element, Tag Loop at End User Premise			UEPCO	URETL		8.33	0.83								
2-WIRE VOICE LOOP/ 2WIRE VOICE GRADE IO TRANSPORT/ 2-WIRE LINE PORT (RES)																
UNE Port/Loop Combination Rates																
	2W VG Loop/IO Tranport/Port Combo-Zone 1					19.00										
	2W VG Loop/IO Tranport/Port Combo-Zone 2					25.45										
	2W VG Loop/IO Tranport/Port Combo-Zone 3					30.78										
UNE Loop Rates																
	2W VG Loop (SL2)-Zone 1		1	UEPFR	UECF2	16.68										
	2W VG Loop (SL2)-Zone 2		2	UEPFR	UECF2	23.13										
	2W VG Loop (SL2)-Zone 3		3	UEPFR	UECF2	28.46										
2-Wire Voice Grade Line Port Rates (Res)																
	2W voice unbundled port-residence			UEPFR	UEPRL	2.32	108.36	70.71	1.42	1.33						
	2W voice unbundled port with Caller ID-res			UEPFR	UEPRC	2.32	108.36	70.71	1.42	1.33						
	2W voice unbundled port outgoing only-res			UEPFR	UEPRO	2.32	108.36	70.71	1.42	1.33						
	2W VG unbundled SC extended local dialing parity port with Caller ID-res			UEPFR	UEPAU	2.32	108.36	70.71	1.42	1.33						
	2W voice unbundled SC Area Calling port with Caller ID-res (LW8)			UEPFR	UEPAJ	2.32	108.36	70.71	1.42	1.33						
	2W voice unbundles res, low usage line port with Caller ID (LUM)			UEPFR	UEPAP	2.32	108.36	70.71	1.42	1.33						
	2W Voice Unbundled SC Residence Dialing Plan w/o Caller ID			UEPFR	UEPWL	2.32	108.36	70.71	1.42	1.33						
INTEROFFICE TRANSPORT																
	Interoffice Transport-Dedicated-2W VG-Facility Termination			UEPFR	U1TV2	19.44	40.63	27.47	16.77	6.91						
	Interoffice Transport-Dedicated-2W VG-Per Mile or Fraction Mile			UEPFR	1L5XX	0.0134										
FEATURES																
	All Features Offered			UEPFR	UEPVF	3.04	0.00	0.00								
NONRECURRING CHARGES (NRCs) - CURRENTLY COMBINED																
	2W Loop/Dedicated IO Transport/2W Line Port Combination-Conversion-Switch-as-is			UEPFR	USAC2		8.50	1.87								

CATEGORY	RATE ELEMENTS	Interim	Zone	BCS	USOC	RATES($)					Svc Order Submitted Elec per LSR	Svc Order Submitted Manually per LSR	Incremental Charge - Manual Svc Order vs. Electronic-1st	Incremental Charge - Manual Svc Order vs. Electronic-Add'l	Incremental Charge - Manual Svc Order vs. Electronic-Disc 1st	Incremental Charge - Manual Svc Order vs. Electronic-Disc Add'l
							Nonrecurring		NRC Disconnect		OSS Rates($)					
						Rec	First	Add'l	First	Add'l	SOMEC	SOMAN	SOMAN	SOMAN	SOMAN	SOMAN
	2W Loop/Dedicated IO Transport/2W Line Port Combination-Conversion-Switch-With-Change			UEPFR	USACC		8.50	1.87								
	Unbundled Misc Rate Element, Tag Designed Loop at End User Premise			UEPFR	URETN		11.24	1.10								
2-WIRE VOICE LOOP/ 2WIRE VOICE GRADE IO TRANSPORT/ 2-WIRE LINE PORT (BUS)																
UNE Port/Loop Combination Rates																
	2W VG Loop/IO Tranport/Port Combo-Zone 1					19.00										
	2W VG Loop/IO Tranport/Port Combo-Zone 2					25.45										
	2W VG Loop/IO Tranport/Port Combo-Zone 3					30.78										
UNE Loop Rates																
	2W VG Loop (SL2)-Zone 1		1	UEPFB	UECF2	16.68										
	2W VG Loop (SL2)-Zone 2		2	UEPFB	UECF2	23.13										
	2W VG Loop (SL2)-Zone 3		3	UEPFB	UECF2	28.46										
2-Wire Voice Grade Line Port (Bus)																
	2W voice unbundled port w/o Caller ID-bus			UEPFB	UEPBL	2.32	108.36	70.71	1.42	1.33						
	2W voice unbundled port with Caller + E484 ID-bus			UEPFB	UEPBC	2.32	108.36	70.71	1.42	1.33						
	2W voice unbundled port outgoing only-bus			UEPFB	UEPBO	2.32	108.36	70.71	1.42	1.33						
	2W VG unbundled SC extended local dialing parity port with Caller ID-bus			UEPFB	UEPAZ	2.32	108.36	70.71	1.42	1.33						
	2W voice unbundled incoming only port with Caller ID-Bus			UEPFB	UEPB1	2.32	108.36	70.71	1.42	1.33						
	2W voice unbundled SC Bus Area Calling Port with Caller ID (LMB)			UEPFB	UEPAB	2.32	108.36	70.71	1.42	1.33						
	2W Voice Unbundled SC Business Dialing Plan w/o Caller ID			UEPFB	UEPWM	2.32	108.36	70.71	1.42	1.33						
INTEROFFICE TRANSPORT																
	Interoffice Transport-Dedicated-2W VG-Facility Termination			UEPFB	U1TV2	19.44	40.63	27.47	16.77	6.91						
	Interoffice Transport-Dedicated-2W VG-Per Mile or Fraction Mile			UEPFB	1L5XX	0.0134										
FEATURES																
	All Features Offered			UEPFB	UEPVF	3.04	0.00	0.00								
NONRECURRING CHARGES (NRCs) - CURRENTLY COMBINED																
	2W Loop/Dedicated IO Transport/2W Line Port Combination-Conversion-Switch-as-is			UEPFB	USAC2		8.50	1.87								
	2W Loop/Dedicated IO Transport/2W Line Port Combination-Conversion-Switch with change			UEPFB	USACC		8.50	1.87								
	Unbundled Misc Rate Element, Tag Designed Loop at End User Premise			UEPFB	URETN		11.24	1.10								
2-WIRE VOICE LOOP/ 2WIRE VOICE GRADE IO TRANSPORT/ 2-WIRE LINE PORT (PBX)																
UNE Port/Loop Combination Rates																
	2W VG Loop/IO Tranport/Port Combo-Zone 1					19.00										
	2W VG Loop/IO Tranport/Port Combo-Zone 2					25.45										
	2W VG Loop/IO Tranport/Port Combo-Zone 3					30.78										
UNE Loop Rates																
	2W VG Loop (SL2)-Zone 1		1	UEPFP	UECF2	16.68										
	2W VG Loop (SL2)-Zone 2		2	UEPFP	UECF2	23.13										
	2W VG Loop (SL2)-Zone 3		3	UEPFP	UECF2	28.46										
2-Wire Voice Grade Line Port Rates (BUS - PBX)																
	Line Side Unbundled Combination 2-Way PBX Trunk Port-Bus			UEPFP	UEPPC	2.32	137.32	83.31	67.02	11.51						
	Line Side Unbundled Outward PBX Trunk Port-Bus			UEPFP	UEPPO	2.32	137.32	83.31	67.02	11.51						
	Line Side Unbundled Incoming PBX Trunk Port-Bus			UEPFP	UEPP1	2.32	137.32	83.31	67.02	11.51						
	2W Voice Unbundled PBX LD Terminal Ports			UEPFP	UEPLD	2.32	137.32	83.31	67.02	11.51						
	2W Voice Unbundled 2-Way Combination PBX Usage Port			UEPFP	UEPXA	2.32	137.32	83.31	67.02	11.51						
	2W Voice Unbundled PBX Toll Terminal Hotel Ports			UEPFP	UEPXB	2.32	137.32	83.31	67.02	11.51						
	2W Voice Unbundled PBX LD DDD Terminals Port			UEPFP	UEPXC	2.32	137.32	83.31	67.02	11.51						
	2W Voice Unbundled PBX LD Terminal Switchboard Port			UEPFP	UEPXD	2.32	137.32	83.31	67.02	11.51						
	2W Voice Unbundled PBX LD Terminal Switchboard IDD Capable Port			UEPFP	UEPXE	2.32	137.32	83.31	67.02	11.51						
	2W Voice Unbundled 2-Way PBX Hotel/Hospital Economy Administrative Calling Port			UEPFP	UEPXL	2.32	137.32	83.31	67.02	11.51						
	2W Voice Unbundled 2-Way PBX Hotel/Hospital Economy Rm Calling Port			UEPFP	UEPXM	2.32	137.32	83.31	67.02	11.51						

UNBUNDLED NETWORK ELEMENTS - South Carolina														Attachment: 2 Exh A			
CATEGORY	RATE ELEMENTS	Interim	Zone	BCS	USOC	RATES($)					Svc Order Submitted Elec per LSR	Svc Order Submitted Manually per LSR	Incremental Charge - Manual Svc Order vs. Electronic-1st	Incremental Charge - Manual Svc Order vs. Electronic-Add'l	Incremental Charge - Manual Svc Order vs. Electronic-Disc 1st	Incremental Charge - Manual Svc Order vs. Electronic-Disc Add'l
							Nonrecurring		NRC Disconnect		OSS Rates($)					
						Rec	First	Add'l	First	Add'l	SOMEC	SOMAN	SOMAN	SOMAN	SOMAN	SOMAN
	2W Voice Unbundled 1-Way Outgoing PBX Hotel/Hospital Discount Rm Calling Port			UEPFP	UEPXO	2.32	137.32	83.31	67.02	11.51						
	2W Voice Unbundled 1-Way Outgoing PBX Measured Port			UEPFP	UEPXS	2.32	137.32	83.31	67.02	11.51						
	2W Voice Unbundled 2-Way PBX SC Area Plus Calling Port			UEPFP	UEPXT	2.32	137.32	83.31	67.02	11.51						
INTEROFFICE TRANSPORT																
	Interoffice Transport-Dedicated-2W VG-Facility Termination			UEPFP	U1TV2	19.44	40.63	27.47	16.77	6.91						
	Interoffice Transport-Dedicated-2W VG-Per Mile or Fraction Mile			UEPFP	1L5XX	0.0134										
FEATURES																
	All Features Offered			UEPFP	UEPVF	3.04	0.00	0.00								
NONRECURRING CHARGES (NRCs) - CURRENTLY COMBINED																
	2W Loop/Dedicated IO Transport/2W Line Port Combination-Conversion-Switch-as-is			UEPFP	USAC2		8.50	1.87								
	2W Loop/Dedicated IO Transport/2W Line Port Combination-Conversion-Switch with change			UEPFP	USACC		8.50	1.87								
	Unbundled Misc Rate Element, Tag Designed Loop at End User Premise			UEPFP	URETN		11.24	1.10								
2-WIRE VOICE GRADE LOOP- BUS ONLY - WITH 2-WIRE DID TRUNK PORT																
UNE Port/Loop Combination Rates																
	2W VG Loop/2W DID Trunk Port Combo-UNE Zone 1					24.75										
	2W VG Loop/2W DID Trunk Port Combo-UNE Zone 2					31.20										
	2W VG Loop/2W DID Trunk Port Combo-UNE Zone 3					36.52										
UNE Loop Rates																
	2W Analog VG Loop- (SL2)-UNE Zone 1		1	UEPPX	UECD1	16.68										
	2W Analog VG Loop- (SL2)-UNE Zone 2		2	UEPPX	UECD1	23.13										
	2W Analog VG Loop- (SL2)-UNE Zone 3		3	UEPPX	UECD1	28.46										
UNE Port Rate																
	Exchange Ports-2W DID Port			UEPPX	UEPD1	8.06	225.55	87.21	113.08	14.38						
NONRECURRING CHARGES - CURRENTLY COMBINED																
	2W VG Loop/2W DID Trunk Port Combination -Switch-as-is			UEPPX	USAC1		7.32	1.87								
	2W VG Loop/2W DID Trunk Port Conversion with BellSouth Allowable Changes			UEPPX	USA1C		7.32	1.87								
ADDITIONAL NRCs																
	2W DID Subsequent Activity-Add Trunks, Per Trunk			UEPPX	USAS1		26.84									
	Unbundled Misc Rate Element, Tag Designed Loop at End User Premise			UEPPX	URETN		11.24	1.10								
Telephone Number/Trunk Group Establisment Charges																
	DID Trunk Termination (One Per Port)			UEPPX	NDT	0.00	0.00	0.00								
	DID Numbers, Establish Trunk Group and Provide First Group of 20 DID Numbers			UEPPX	NDZ	0.00	0.00	0.00								
	Additional DID Numbers for each Group of 20 DID Numbers			UEPPX	ND4	0.00	0.00	0.00								
	DID Numbers, Non- consecutive DID Numbers , Per Number			UEPPX	ND5	0.00	0.00	0.00								
	Reserve Non-Consecutive DID numbers			UEPPX	ND6	0.00	0.00	0.00								
	Reserve DID Numbers			UEPPX	NDV	0.00	0.00	0.00								
2-WIRE ISDN DIGITAL GRADE LOOP WITH 2-WIRE ISDN DIGITAL LINE SIDE PORT																
UNE Port/Loop Combination Rates																
	2W ISDN Digital Grade Loop/2W ISDN Digital Line Side Port -UNE Zone 1					31.86										
	2W ISDN Digital Grade Loop/2W ISDN Digital Line Side Port -UNE Zone 2					39.60										
	2W ISDN Digital Grade Loop/2W ISDN Digital Line Side Port -UNE Zone 3					45.23										
UNE Loop Rates																
	2W ISDN Digital Grade Loop-UNE Zone 1		1	UEPPB UEPPR	USL2X	21.90										
	2W ISDN Digital Grade Loop-UNE Zone 2		2	UEPPB UEPPR	USL2X	29.64										
	2W ISDN Digital Grade Loop-UNE Zone 3		3	UEPPB UEPPR	USL2X	35.27										
UNE Port Rate																
	Exchange Port-2W ISDN Line Side Port			UEPPR	UEPPR	9.96	190.51	133.14	100.95	21.37						
	Exchange Port-2W ISDN Line Side Port			UEPPB	UEPPB	9.96	190.51	133.14	100.95	21.37						

UNBUNDLED NETWORK ELEMENTS - South Carolina														Attachment: 2 Exh A			
CATEGORY	RATE ELEMENTS	Interim	Zone	BCS	USOC	RATES($)					Svc Order Submitted Elec per LSR	Svc Order Submitted Manually per LSR	Incremental Charge - Manual Svc Order vs. Electronic-1st	Incremental Charge - Manual Svc Order vs. Electronic-Add'l	Incremental Charge - Manual Svc Order vs. Electronic-Disc 1st	Incremental Charge - Manual Svc Order vs. Electronic-Disc Add'l
							Nonrecurring		NRC Disconnect		OSS Rates($)					
						Rec	First	Add'l	First	Add'l	SOMEC	SOMAN	SOMAN	SOMAN	SOMAN	SOMAN
NONRECURRING CHARGES - CURRENTLY COMBINED																
	2W ISDN Digital Grade Loop/2W ISDN Line Side Port Combination-Conversion			UEPPB UEPPR	USACB	0.00	38.59	27.08								
ADDITIONAL NRCs																
	Unbundled Misc Rate Element, Tag Designed Loop at End User Premise			UEPPB UEPPR	URETN		11.24	1.10								
	Unbundled Misc Rate Element, Tag Loop at End User Premise			UEPPB UEPPR	URETL		8.33	0.83								
B-CHANNEL USER PROFILE ACCESS:																
	CVS/CSD (DMS/5ESS)			UEPPB UEPPR	U1UCA	0.00	0.00	0.00								
	CVS (EWSD)			UEPPB UEPPR	U1UCB	0.00	0.00	0.00								
	CSD			UEPPB UEPPR	U1UCC	0.00	0.00	0.00								
B-CHANNEL AREA PLUS USER PROFILE ACCESS: (AL,KY,LA,MS SC,MS, & TN)																
	CVS/CSD (DMS/5ESS)			UEPPB UEPPR	U1UCD	0.00	0.00	0.00								
	CVS (EWSD)			UEPPB UEPPR	U1UCE	0.00	0.00	0.00								
	CSD			UEPPB UEPPR	U1UCF	0.00	0.00	0.00								
USER TERMINAL PROFILE																
	User Terminal Profile (EWSD only)			UEPPB UEPPR	U1UMA	0.00	0.00	0.00								
VERTICAL FEATURES																
	All Vertical Features-One per Channel B User Profile			UEPPB UEPPR	UEPVF	3.04	0.00	0.00								
INTEROFFICE CHANNEL MILEAGE																
	Interoffice Channel mileage each, including first mile and facilities termination			UEPPB UEPPR	M1GNC	24.30	40.63	27.47	16.77	6.91						
	Interoffice Channel mileage each, additional mile			UEPPB UEPPR	M1GNM	0.0167	0.00	0.00								
UNBUNDLED CENTREX PORT/LOOP COMBINATIONS - COST BASED RATES																
UNE-P CENTREX - 5ESS (Valid in All States)																
2-Wire VG Loop/2-Wire Voice Grade Port (Centrex) Combo																
UNE Port/Loop Combination Rates (Non-Design)																
	2W VG Loop/2W VG Port (Centrex) Port Combo-Non-Design					15.89										
	2W VG Loop/2W VG Port (Centrex)Port Combo-Non-Design					22.52										
	2W VG Loop/2W VG Port (Centrex)Port Combo-Non-Design					28.17										
UNE Port/Loop Combination Rates (Design)																
	2W VG Loop/2W VG Port (Centrex) Port Combo-Design					18.81										
	2W VG Loop/2W VG Port (Centrex)Port Combo-Design					25.26										
	2W VG Loop/2W VG Port (Centrex)Port Combo-Design					30.59										
UNE Loop Rate																
	2W VG Loop (SL 1)-Zone 1		1	UEP95	UECS1	13.76										
	2W VG Loop (SL 1)-Zone 2		2	UEP95	UECS1	20.38										
	2W VG Loop (SL 1)-Zone 3		3	UEP95	UECS1	26.04										
	2W VG Loop (SL 2)-Zone 1		1	UEP95	UECS2	16.68										
	2W VG Loop (SL 2)-Zone 2		2	UEP95	UECS2	23.13										
	2W VG Loop (SL 2)-Zone 3		3	UEP95	UECS2	28.46										
UNE Port Rate																
All States																
	2W VG Port (Centrex) Basic Local Area			UEP95	UEPYA	2.13	40.30	19.90	24.98	6.65						
	2W VG Port (Centrex 800 termination)			UEP95	UEPYB	2.13	40.30	19.90	24.98	6.65						
	2W VG Port (Centrex with Caller ID)1Basic Local Area			UEP95	UEPYH	2.13	40.30	19.90	24.98	6.65						
	2W VG Port (Centrex from diff SWC)2,3 Basic Local Area			UEP95	UEPYM	2.13	108.36	70.71	54.47	11.94						
	2W VG Port, Diff SWC 2,3-800 Service Term-Basic Local Area			UEP95	UEPYZ	2.13	108.36	70.71	54.47	11.94						
	2W VG Port terminated in on Megalink or equivalent-Basic Local Area			UEP95	UEPY9	2.13	40.30	19.90	24.98	6.65						
	2W VG Port Terminated on 800 Service Term-Basic Local Area			UEP95	UEPY2	2.13	40.30	19.90	24.98	6.65						
AL, KY, LA, MS, SC, & TN Only																
	2W VG Port (Centrex)			UEP95	UEPQA	2.13	40.30	19.90	24.98	6.65						
	2W VG Port (Centrex 800 termination)			UEP95	UEPQB	2.13	40.30	19.90	24.98	6.65						
	2W VG Port (Centrex with Caller ID)1			UEP95	UEPQH	2.13	40.30	19.90	24.98	6.65						
	2W VG Port (Centrex from diff SWC)2,3			UEP95	UEPQM	2.13	108.36	70.71	54.47	11.94						
	2W VG Port, Diff SWC-800 Service Term 2,3			UEP95	UEPQZ	2.13	108.36	70.71	54.47	11.94						
	2W VG Port terminated in on Megalink or equivalent			UEP95	UEPQ9	2.13	40.30	19.90	24.98	6.65						
	2W VG Port Terminated on 800 Service Term			UEP95	UEPQ2	2.13	40.30	19.90	24.98	6.65						

UNBUNDLED NETWORK ELEMENTS - South Carolina														Attachment: 2 Exh A			
CATEGORY	RATE ELEMENTS	Interim	Zone	BCS	USOC	RATES($)					Svc Order Submitted Elec per LSR	Svc Order Submitted Manually per LSR	Incremental Charge - Manual Svc Order vs. Electronic-1st	Incremental Charge - Manual Svc Order vs. Electronic-Add'l	Incremental Charge - Manual Svc Order vs. Electronic-Disc 1st	Incremental Charge - Manual Svc Order vs. Electronic-Disc Add'l
							Nonrecurring		NRC Disconnect		OSS Rates($)					
						Rec	First	Add'l	First	Add'l	SOMEC	SOMAN	SOMAN	SOMAN	SOMAN	SOMAN
Local Switching																
	Centrex Intercom Funtionality, per port			UEP95	URECS	0.7996										
Features																
	All Standard Features Offered, per port			UEP95	UEPVF	3.04										
	All Select Features Offered, per port			UEP95	UEPVS	0.00	406.42									
	All Centrex Control Features Offered, per port			UEP95	UEPVC	3.04										
NARS																
	Unbundled Network Access Register-Combination			UEP95	UARCX	0.00	0.00	0.00	0.00	0.00						
	Unbundled Network Access Register-Indial			UEP95	UAR1X	0.00	0.00	0.00	0.00	0.00						
	Unbundled Network Access Register-Outdial			UEP95	UAROX	0.00	0.00	0.00	0.00	0.00						
Misc Terminations																
2-Wire Trunk Side																
	Trunk Side Terminations, each			UEP95	CEND6	8.86	119.57	18.78	60.03	3.77						
4-Wire Digital (1.544 Megabits)																
	DS1 Circuit Terminations, each			UEP95	M1HD1	73.62	202.47	95.90	72.75	2.47						
	DS0 Channels Activated, each			UEP95	M1HDO	0.00	14.51									
Interoffice Channel Mileage - 2-Wire																
	Interoffice Channel Facilities Termination			UEP95	M1GBC	24.30	40.63	27.47	16.77	6.91						
	Interoffice Channel mileage, per mile or fraction of mile			UEP95	M1GBM	0.0167										
Feature Activations (DS0) Centrex Loops on Channelized DS1 Service																
D4 Channel Bank Feature Activations																
	Feature Activation on D-4 Channel Bank Centrex Loop Slot			UEP95	1PQWS	0.56										
	Feature Activation on D-4 Channel Bank FX line Side Loop Slot			UEP95	1PQW6	0.56										
	Feature Activation on D-4 Channel Bank FX Trunk Side Loop Slot			UEP95	1PQW7	0.56										
	Feature Activation on D-4 Channel Bank Centrex Loop Slot-Different WC			UEP95	1PQWP	0.56										
	Feature Activation on D-4 Channel Bank Private Line Loop Slot			UEP95	1PQWV	0.56										
	Feature Activation on D-4 Channel Bank Tjie Line/Trunk Loop Slot			UEP95	1PQWQ	0.56										
	Feature Activation on D-4 Channel Bank WATS Loop Slot			UEP95	1PQWA	0.56										
Non-Recurring Charges (NRC) Associated with UNE-P Centrex																
	NRC Conversion Currently Combined Switch-As-Is with allowed changes, per port			UEP95	USAC2		37.93	16.72								
	New Centrex Standard Common Block			UEP95	M1ACS	0.00	668.70									
	New Centrex Customized Common Block			UEP95	M1ACC	0.00	668.70									
	NAR Establishment Charge, Per Occasion			UEP95	URECA	0.00	72.89									
Additional Non-Recurring Charges (NRC)																
	Unbundled Misc Rate Element, Tag Loop at End Use Premise			UEP95	URETL		8.33	0.83								
	Unbundled Misc Rate Element, Tag Design Loop at End Use Premise			UEP95	URETN		11.24	1.10								
UNE-P CENTREX - DMS100 (Valid in All States)																
2-Wire VG Loop/2-Wire Voice Grade Port (Centrex) Combo																
UNE Port/Loop Combination Rates (Non-Design)																
	2W VG Loop/2W VG Port (Centrex) Port Combo-Non-Design					15.89										
	2W VG Loop/2W VG Port (Centrex)Port Combo-Non-Design					22.52										
	2W VG Loop/2W VG Port (Centrex)Port Combo-Non-Design					28.17										
UNE Port/Loop Combination Rates (Design)																
	2W VG Loop/2W VG Port (Centrex) Port Combo-Design					18.81										
	2W VG Loop/2W VG Port (Centrex)Port Combo-Design					25.26										
	2W VG Loop/2W VG Port (Centrex)Port Combo-Design					30.59										
UNE Loop Rate																
	2W VG Loop (SL 1)-Zone 1		1	UEP9D	UECS1	13.76										
	2W VG Loop (SL 1)-Zone 2		2	UEP9D	UECS1	20.38										
	2W VG Loop (SL 1)-Zone 3		3	UEP9D	UECS1	26.04										
	2W VG Loop (SL 2)-Zone 1		1	UEP9D	UECS2	16.68										
	2W VG Loop (SL 2)-Zone 2		2	UEP9D	UECS2	23.13										
	2W VG Loop (SL 2)-Zone 3		3	UEP9D	UECS2	28.46										
UNE Port Rate																
ALL STATES																
	2W VG Port (Centrex) Basic Local Area			UEP9D	UEPYA	2.13	40.30	19.90	24.98	6.65						

CATEGORY		RATE ELEMENTS	Interim	Zone	BCS	USOC	RATES($)					Svc Order Submitted Elec per LSR	Svc Order Submitted Manually per LSR	Incremental Charge - Manual Svc Order vs. Electronic-1st	Incremental Charge - Manual Svc Order vs. Electronic-Add'l	Incremental Charge - Manual Svc Order vs. Electronic-Disc 1st	Incremental Charge - Manual Svc Order vs. Electronic-Disc Add'l
								Nonrecurring		NRC Disconnect		OSS Rates($)					
							Rec	First	Add'l	First	Add'l	SOMEC	SOMAN	SOMAN	SOMAN	SOMAN	SOMAN
		2W VG Port (Centrex 800 termination)Basic Local Area			UEP9D	UEPYB	2.13	40.30	19.90	24.98	6.65						
		2W VG Port (Centrex/EBS-PSET)3Basic Local Area			UEP9D	UEPYC	2.13	40.30	19.90	24.98	6.65						
		2W VG Port (Centrex /EBS-M5009)3Basic Local Area			UEP9D	UEPYD	2.13	40.30	19.90	24.98	6.65						
		2W VG Port (Centrex /EBS-M5209))3 Basic Local Area			UEP9D	UEPYE	2.13	40.30	19.90	24.98	6.65						
		2W VG Port (Centrex /EBS-M5112))3 Basic Local Area			UEP9D	UEPYF	2.13	40.30	19.90	24.98	6.65						
		2W VG Port (Centrex /EBS-M5312))3Basic Local Area			UEP9D	UEPYG	2.13	40.30	19.90	24.98	6.65						
		2W VG Port (Centrex /EBS-M5008))3 Basic Local Area			UEP9D	UEPYT	2.13	40.30	19.90	24.98	6.65						
		2W VG Port (Centrex/EBS-M5208))3 Basic Local Area			UEP9D	UEPYU	2.13	40.30	19.90	24.98	6.65						
		2W VG Port (Centrex/EBS-M5216))3 Basic Local Area			UEP9D	UEPYV	2.13	40.30	19.90	24.98	6.65						
		2W VG Port (Centrex/EBS-M5316))3 Basic Local Area			UEP9D	UEPY3	2.13	40.30	19.90	24.98	6.65						
		2W VG Port (Centrex with Caller ID) Basic Local Area			UEP9D	UEPYH	2.13	40.30	19.90	24.98	6.65						
		2W VG Port (Centrex/Caller ID/Msg Wtg Lamp Indication))4 Basic Local Area			UEP9D	UEPYW	2.13	40.30	19.90	24.98	6.65						
		2W VG Port (Centrex/Msg Wtg Lamp Indication))4 Basic Local Area			UEP9D	UEPYJ	2.13	40.30	19.90	24.98	6.65						
		2W VG Port (Centrex from diff SWC) 2,3-Basic Local Area			UEP9D	UEPYM	2.13	108.36	70.71	54.47	11.94						
		2W VG Port (Centrex/differ SWC /EBS-PSET)2,3,4 Basic Local Area			UEP9D	UEPYO	2.13	108.36	70.71	54.47	11.94						
		2W VG Port (Centrex/differ SWC /EBS-M5009)2,3,4 Basic Local Area			UEP9D	UEPYP	2.13	108.36	70.71	54.47	11.94						
		2W VG Port (Centrex/differ SWC /EBS-5209)2,3,4 Basic Local Area			UEP9D	UEPYQ	2.13	108.36	70.71	54.47	11.94						
		2W VG Port (Centrex/differ SWC /EBS-M5112)2,3,4 Basic Local Area			UEP9D	UEPYR	2.13	108.36	70.71	54.47	11.94						
		2W VG Port (Centrex/differ SWC /EBS-M5312)2,3,4 Basic Local Area			UEP9D	UEPYS	2.13	108.36	70.71	54.47	11.94						
		2W VG Port (Centrex/differ SWC /EBS-M5008)2,3,4 Basic Local Area			UEP9D	UEPY4	2.13	108.36	70.71	54.47	11.94						
		2W VG Port (Centrex/differ SWC /EBS-M5208)2, 3 Basic Local Area			UEP9D	UEPY5	2.13	108.36	70.71	54.47	11.94						
		2W VG Port (Centrex/differ SWC /EBS-M5216)2,3,4 Basic Local Area			UEP9D	UEPY6	2.13	108.36	70.71	54.47	11.94						
		2W VG Port (Centrex/differ SWC /EBS-M5316)2,3,4 Basic Local Area			UEP9D	UEPY7	2.13	108.36	70.71	54.47	11.94						
		2W VG Port, Diff SWC-800 Service Term 2,3			UEP9D	UEPYZ	2.13	108.36	70.71	54.47	11.94						
		2W VG Port terminated in on Megalink or equivalent Basic Local Area			UEP9D	UEPY9	2.13	40.30	19.90	24.98	6.65						
		2W VG Port Terminated on 800 Service Term Basic Local Area			UEP9D	UEPY2	2.13	40.30	19.90	24.98	6.65						
	AL, KY, LA, MS, SC, & TN Only																
		2W VG Port (Centrex)			UEP9D	UEPQA	2.13	40.30	19.90	24.98	6.65						
		2W VG Port (Centrex 800 termination)			UEP9D	UEPQB	2.13	40.30	19.90	24.98	6.65						
		2W VG Port (Centrex/EBS-PSET)4			UEP9D	UEPQC	2.13	40.30	19.90	24.98	6.65						
		2W VG Port (Centrex /EBS-M5009)4			UEP9D	UEPQD	2.13	40.30	19.90	24.98	6.65						
		2W VG Port (Centrex /EBS-M5209)4			UEP9D	UEPQE	2.13	40.30	19.90	24.98	6.65						
		2W VG Port (Centrex /EBS-M5112)4			UEP9D	UEPQF	2.13	40.30	19.90	24.98	6.65						
		2W VG Port (Centrex /EBS-M5312)4			UEP9D	UEPQG	2.13	40.30	19.90	24.98	6.65						
		2W VG Port (Centrex /EBS-M5008)4			UEP9D	UEPQT	2.13	40.30	19.90	24.98	6.65						
		2W VG Port (Centrex/EBS-M5208)4			UEP9D	UEPQU	2.13	40.30	19.90	24.98	6.65						
		2W VG Port (Centrex/EBS-M5216)4			UEP9D	UEPQV	2.13	40.30	19.90	24.98	6.65						
		2W VG Port (Centrex/EBS-M5316)4			UEP9D	UEPQ3	2.13	40.30	19.90	24.98	6.65						
		2W VG Port (Centrex with Caller ID)			UEP9D	UEPQH	2.13	40.30	19.90	24.98	6.65						
		2W VG Port (Centrex/Caller ID/Msg Wtg Lamp Indication)4			UEP9D	UEPQW	2.13	40.30	19.90	24.98	6.65						
		2W VG Port (Centrex/Msg Wtg Lamp Indication)4			UEP9D	UEPQJ	2.13	40.30	19.90	24.98	6.65						
		2W VG Port (Centrex from diff SWC) 2,3			UEP9D	UEPQM	2.13	108.36	70.71	54.47	11.94						
		2W VG Port (Centrex/differ SWC /EBS-PSET)2,3,4			UEP9D	UEPQO	2.13	108.36	70.71	54.47	11.94						
		2W VG Port (Centrex/differ SWC /EBS-M5009)2,3,4			UEP9D	UEPQP	2.13	108.36	70.71	54.47	11.94						
		2W VG Port (Centrex/differ SWC /EBS-5209)2,3,4			UEP9D	UEPQQ	2.13	108.36	70.71	54.47	11.94						
		2W VG Port (Centrex/differ SWC /EBS-M5112)2,3,4			UEP9D	UEPQR	2.13	108.36	70.71	54.47	11.94						
		2W VG Port (Centrex/differ SWC /EBS-M5312)2,3,4			UEP9D	UEPQS	2.13	108.36	70.71	54.47	11.94						
		2W VG Port (Centrex/differ SWC /EBS-M5008)2,3,4			UEP9D	UEPQ4	2.13	108.36	70.71	54.47	11.94						
		2W VG Port (Centrex/differ SWC /EBS-M5208)2,3,4			UEP9D	UEPQ5	2.13	108.36	70.71	54.47	11.94						
		2W VG Port (Centrex/differ SWC /EBS-M5216)2,3,4			UEP9D	UEPQ6	2.13	108.36	70.71	54.47	11.94						
		2W VG Port (Centrex/differ SWC /EBS-M5316)2,3,4			UEP9D	UEPQ7	2.13	108.36	70.71	54.47	11.94						

UNBUNDLED NETWORK ELEMENTS - South Carolina														Attachment: 2 Exh A			
CATEGORY	RATE ELEMENTS	Interim	Zone	BCS	USOC	RATES($)					Svc Order Submitted Elec per LSR	Svc Order Submitted Manually per LSR	Incremental Charge - Manual Svc Order vs. Electronic-1st	Incremental Charge - Manual Svc Order vs. Electronic-Add'l	Incremental Charge - Manual Svc Order vs. Electronic-Disc 1st	Incremental Charge - Manual Svc Order vs. Electronic-Disc Add'l
							Nonrecurring		NRC Disconnect		OSS Rates($)					
						Rec	First	Add'l	First	Add'l	SOMEC	SOMAN	SOMAN	SOMAN	SOMAN	SOMAN
	2W VG Port, Diff SWC-800 Service Term 2,3			UEP9D	UEPQZ	2.13	108.36	70.71	54.47	11.94						
	2W VG Port terminated in on Megalink or equivalent			UEP9D	UEPQ9	2.13	40.30	19.90	24.98	6.65						
	2W VG Port Terminated on 800 Service Term			UEP9D	UEPQ2	2.13	40.30	19.90	24.98	6.65						
Local Switching																
	Centrex Intercom Funtionality, per port			UEP9D	URECS	0.7996										
Features																
	All Standard Features Offered, per port			UEP9D	UEPVF	3.04										
	All Select Features Offered, per port			UEP9D	UEPVS	0.00	406.42									
	All Centrex Control Features Offered, per port			UEP9D	UEPVC	3.04										
NARS																
	Unbundled Network Access Register-Combination			UEP9D	UARCX	0.00	0.00	0.00	0.00	0.00						
	Unbundled Network Access Register-Inward			UEP9D	UAR1X	0.00	0.00	0.00	0.00	0.00						
	Unbundled Network Access Register-Outdial			UEP9D	UAROX	0.00	0.00	0.00	0.00	0.00						
Misc Terminations																
2-Wire Trunk Side																
	Trunk Side Terminations, each			UEP9D	CEND6	8.86	119.57	18.78	60.03	3.77						
4-Wire Digital (1.544 Megabits)																
	DS1 Circuit Terminations, each			UEP9D	M1HD1	73.62	202.47	95.90	72.75	2.47						
	DS0 Channels Activiated per Channel			UEP9D	M1HDO	0.00	14.51									
Interoffice Channel Mileage - 2-Wire																
	Interoffice Channel Facilities Termination			UEP9D	M1GBC	24.30	40.63	27.47	16.77	6.91						
	Interoffice Channel mileage, per mile or fraction of mile			UEP9D	M1GBM	0.0167										
Feature Activations (DS0) Centrex Loops on Channelized DS1 Service																
D4 Channel Bank Feature Activations																
	Feature Activation on D-4 Channel Bank Centrex Loop Slot			UEP9D	1PQWS	0.56										
	Feature Activation on D-4 Channel Bank FX line Side Loop Slot			UEP9D	1PQW6	0.56										
	Feature Activation on D-4 Channel Bank FX Trunk Side Loop Slot			UEP9D	1PQW7	0.56										
	Feature Activation on D-4 Channel Bank Centrex Loop Slot-Different WC			UEP9D	1PQWP	0.56										
	Feature Activation on D-4 Channel Bank Private Line Loop Slot			UEP9D	1PQWV	0.56										
	Feature Activation on D-4 Channel Bank Tjie Line/Trunk Loop Slot			UEP9D	1PQWQ	0.56										
	Feature Activation on D-4 Channel Bank WATS Loop Slot			UEP9D	1PQWA	0.56										
Non-Recurring Charges (NRC) Associated with UNE-P Centrex																
	NRC Conversion Currently Combined Switch-As-Is with allowed changes, per port			UEP9D	USAC2		37.93	16.72								
	New Centrex Standard Common Block			UEP9D	M1ACS	0.00	668.70									
	New Centrex Customized Common Block			UEP9D	M1ACC	0.00	668.70									
	NAR Establishment Charge, Per Occasion			UEP9D	URECA	0.00	72.89									
Additional Non-Recurring Charges (NRC)																
	Unbundled Misc Rate Element, Tag Loop at End Use Premise			UEP9D	URETL		8.33	0.83								
	Unbundled Misc Rate Element, Tag Design Loop at End Use Premise			UEP9D	URETN		11.24	1.10								
Note 1 - Required Port for Centrex Control in 1AESS, 5ESS & EWSD																
Note 2 - Requres Interoffice Channel Mileage																
Note 3 - Installation is combination of Installation charge for SL2 Loop and Port																
Note 4 - Requires Specific Customer Premises Equipment																
Note: Rates displaying an "I" in Interim column are interim as a result of a Commission order.																

UNBUNDLED NETWORK ELEMENTS - Tennessee														Attachment: 2 Exh A			
CATEGORY		RATE ELEMENTS	Interim	Zone	BCS	USOC	RATES($)					Svc Order Submitted Elec per LSR	Svc Order Submitted Manually per LSR	Incremental Charge - Manual Svc Order vs. Electronic-1st	Incremental Charge - Manual Svc Order vs. Electronic-Add'l	Incremental Charge - Manual Svc Order vs. Electronic-Disc 1st	Incremental Charge - Manual Svc Order vs. Electronic-Disc Add'l
								Nonrecurring		NRC Disconnect		OSS Rates($)					
							Rec	First	Add'l	First	Add'l	SOMEC	SOMAN	SOMAN	SOMAN	SOMAN	SOMAN
	The "Zone" shown in the sections for stand-alone loops or loops as part of a combination refers to Geographically Deaveraged UNE Zones. To view Geographically Deaveraged UNE Zone Designations by Central Office, refer to internet Website: http://www.interconnection.bellsouth.com/become_a_clec/html/interconnection.htm																
OPERATIONS SUPPORT SYSTEMS (OSS) - "REGIONAL RATES"																	
	NOTE: (1) CLEC should contact its contract negotiator if it prefers the "state specific" OSS charges as ordered by the State Commissions. The OSS charges currently contained in this rate exhibit are the BellSouth "regional" service ordering charges. CLEC may elect either the state specific Commission ordered rates for the service ordering charges, or CLEC may elect the regional service ordering charge, however, CLEC can not obtain a mixture of the two regardless if CLEC has a interconnection contract																
	NOTE: (2) Any element that can be ordered electronically will be billed according to the SOMEC rate listed in this category. Please refer to BellSouth's Local Ordering Handbook (LOH) to determine if a product can be ordered electronically. For those elements that cannot be ordered electronically at present per the LOH, the listed SOMEC rate in this category reflects the charge that would be billed to a CLEC once electronic ordering capabilities come on-line for that element. Otherwise, the manual																
	NOTE: (3) OSS - Manual Service Order Charge, Per Element - UNE Only **Please see applicable rate element for SOMAN charge**																
		OSS-Electronic Service Order Charge, Per Local Service Request (LSR) UNE Only				SOMEC		3.50	0.00	3.50	0.00						
UNE SERVICE DATE ADVANCEMENT CHARGE																	
	NOTE: The Expedite charge will be maintained commensurate with BellSouth's FCC No.1 Tariff, Section 5 as applicable.																
		UNE Expedite Charge per Circuit or Line Assignable USOC, per Day			UAL, UEANL, UCL, UEF, UDF, UEQ, UDL, UENTW, UDN, UEA, UHL, ULC, USL, U1T12, U1T48, U1TD1, U1TD3, U1TDX, U1TO3, U1TS1, U1TVX, UC1BC, UC1BL, UC1CC, UC1CL, UC1DC, UC1DL, UC1EC, UC1EL, UC1FC, UC1FL, UC1GC, UC1GL, UC1HC, UC1HL, UDL12, UDL48, UDLO3, UDLSX, UE3, ULD12, ULD48, ULDD1, ULDD3, ULDDX, ULDO3, ULDS1, ULDVX, UNC1X, UNC3X, UNCDX, UNCNX, UNCSX, UNCVX, UNLD1, UNLD3, UXTD1, UXTD3, UXTS1, U1TUC, U1TUD, U1TUB, U1TUA,NTCVG, NTCUD, NTCD1	SDASP		200.00									
ORDER MODIFICATION CHARGE																	
		Order Modification Charge (OMC)						26.21	0.00	0.00	0.00						
		Order Modification Additional Dispatch Charge (OMCAD)						150.00	0.00	0.00	0.00						
UNBUNDLED EXCHANGE ACCESS LOOP																	
	2-WIRE ANALOG VOICE GRADE LOOP																
		2W Analog VG Loop- SL2 w/Loop or Ground Start Signaling-Zone 1		1	UEA	UEAL2	14.74	75.06	48.20	28.70	17.64			20.35	10.54	13.32	13.32
		2W Analog VG Loop- SL2 w/Loop or Ground Start Signaling-Zone 2		2	UEA	UEAL2	22.08	75.06	48.20	28.70	17.64			20.35	10.54	13.32	13.32
		2W Analog VG Loop- SL2 w/Loop or Ground Start Signaling-Zone 3		3	UEA	UEAL2	36.87	75.06	48.20	28.70	17.64			20.35	10.54	13.32	13.32
		2W Analog VG Loop- SL2 w/Reverse Battery Signaling-Zone 1		1	UEA	UEAR2	14.74	75.06	48.20	28.70	17.64			20.35	10.54	13.32	13.32
		2W Analog VG Loop- SL2 w/Reverse Battery Signaling-Zone 2		2	UEA	UEAR2	22.08	75.06	48.20	28.70	17.64			20.35	10.54	13.32	13.32
		2W Analog VG Loop- SL2 w/Reverse Battery Signaling-Zone 3		3	UEA	UEAR2	36.87	75.06	48.20	28.70	17.64			20.35	10.54	13.32	13.32
		Switch-As-Is Conversion rate per UNE Loop, Single LSR, (per DS0)			UEA	URESL		23.42	3.30					20.35	10.54	13.32	13.32
		Switch-As-Is Conversion rate per UNE Loop, Spreadsheet, (per DS0)			UEA	URESP		24.82	4.70								
		CLEC to CLEC Conversion Charge w/o outside dispatch			UEA	UREWO		75.06	36.41					20.35	10.54	13.32	13.32
		Loop Tagging-SL2 (SL2)			UEA	URETL		11.23	1.10								

CATEGORY	RATE ELEMENTS	Interim	Zone	BCS	USOC	RATES($)					Svc Order Submitted Elec per LSR	Svc Order Submitted Manually per LSR	Incremental Charge - Manual Svc Order vs. Electronic-1st	Incremental Charge - Manual Svc Order vs. Electronic-Add'l	Incremental Charge - Manual Svc Order vs. Electronic-Disc 1st	Incremental Charge - Manual Svc Order vs. Electronic-Disc Add'l
							Nonrecurring		NRC Disconnect		OSS Rates($)					
						Rec	First	Add'l	First	Add'l	SOMEC	SOMAN	SOMAN	SOMAN	SOMAN	SOMAN
	4-WIRE ANALOG VOICE GRADE LOOP															
	4W Analog VG Loop-Zone 1		1	UEA	UEAL4	21.98	122.76	85.57	76.35	39.16			20.35	10.54	13.32	13.32
	4W Analog VG Loop-Zone 2		2	UEA	UEAL4	32.93	122.76	85.57	76.35	39.16			20.35	10.54	13.32	13.32
	4W Analog VG Loop-Zone 3		3	UEA	UEAL4	54.99	122.76	85.57	76.35	39.16			20.35	10.54	13.32	13.32
	Switch-As-Is Conversion rate per UNE Loop, Single LSR, (per DS0)			UEA	URESL		23.42	3.30					20.35	10.54	13.32	13.32
	Switch-As-Is Conversion rate per UNE Loop, Spreadsheet, (per DS0)			UEA	URESP		24.82	4.70								
	CLEC to CLEC Conversion Charge w/o outside dispatch			UEA	UREWO		75.06	36.41					20.35	10.54	13.32	13.32
	2-WIRE ISDN DIGITAL GRADE LOOP															
	2W ISDN Digital Grade Loop-Zone 1		1	UDN	U1L2X	19.77	142.76	88.88	76.35	39.16			20.35	10.54	13.32	13.32
	2W ISDN Digital Grade Loop-Zone 2		2	UDN	U1L2X	29.63	142.76	88.88	76.35	39.16			20.35	10.54	13.32	13.32
	2W ISDN Digital Grade Loop-Zone 3		3	UDN	U1L2X	49.47	142.76	88.88	76.35	39.16			20.35	10.54	13.32	13.32
	CLEC to CLEC Conversion Charge w/o outside dispatch			UDN	UREWO		91.77	44.22					20.35	10.54	13.32	13.32
	2-WIRE ASYMMETRICAL DIGITAL SUBSCRIBER LINE (ADSL) COMPATIBLE LOOP															
	2W Unbundled ADSL Loop including manual service inquiry & facility reservation-Zone 1		1	UAL	UAL2X	12.30	156.95	64.54	89.64	16.93			20.35	10.54	13.32	13.32
	2W Unbundled ADSL Loop including manual service inquiry & facility reservation-Zone 2		2	UAL	UAL2X	18.43	156.95	64.54	89.64	16.93			20.35	10.54	13.32	13.32
	2W Unbundled ADSL Loop including manual service inquiry & facility reservation-Zone 3		3	UAL	UAL2X	30.77	156.95	64.54	89.64	16.93			20.35	10.54	13.32	13.32
	2W Unbundled ADSL Loop w/o manual service inquiry & facility reservaton-Zone 1		1	UAL	UAL2W	12.30	89.40	35.91	72.02	11.48			20.35	10.54	13.32	13.32
	2W Unbundled ADSL Loop w/o manual service inquiry & facility reservaton-Zone 2		2	UAL	UAL2W	18.43	89.40	35.91	72.02	11.48			20.35	10.54	13.32	13.32
	2W Unbundled ADSL Loop w/o manual service inquiry & facility reservaton-Zone 3		3	UAL	UAL2W	30.77	89.40	35.91	72.02	11.48			20.35	10.54	13.32	13.32
	CLEC to CLEC Conversion Charge w/o outside dispatch			UAL	UREWO		31.99	20.02					20.35	10.54	13.32	13.32
	2-WIRE HIGH BIT RATE DIGITAL SUBSCRIBER LINE (HDSL) COMPATIBLE LOOP															
	2W Unbundled HDSL Loop including manual service inquiry & facility reservation-Zone 1		1	UHL	UHL2X	9.64	158.94	65.20	89.64	16.93			20.35	10.54	13.32	13.32
	2W Unbundled HDSL Loop including manual service inquiry & facility reservation-Zone 2		2	UHL	UHL2X	14.44	158.94	65.20	89.64	16.93			20.35	10.54	13.32	13.32
	2W Unbundled HDSL Loop including manual service inquiry & facility reservation-Zone 3		3	UHL	UHL2X	24.12	158.94	65.20	89.64	16.93			20.35	10.54	13.32	13.32
	2W Unbundled HDSL Loop w/o manual service inquiry and facility reservation-Zone 1		1	UHL	UHL2W	9.64	89.40	35.91	72.02	11.48			20.35	10.54	13.32	13.32
	2W Unbundled HDSL Loop w/o manual service inquiry and facility reservation-Zone 2		2	UHL	UHL2W	14.44	89.40	35.91	72.02	11.48			20.35	10.54	13.32	13.32
	2W Unbundled HDSL Loop w/o manual service inquiry and facility reservation-Zone 3		3	UHL	UHL2W	24.12	89.40	35.91	72.02	11.48			20.35	10.54	13.32	13.32
	CLEC to CLEC Conversion Charge w/o outside dispatch			UHL	UREWO		31.99	20.02					20.35	10.54	13.32	13.32
	4-WIRE HIGH BIT RATE DIGITAL SUBSCRIBER LINE (HDSL) COMPATIBLE LOOP															
	4 Wire Unbundled HDSL Loop including manual service inquiry and facility reservation-Zone 1		1	UHL	UHL4X	12.40	169.62	75.89	39.73	19.53			20.35	10.54	13.32	13.32
	4W Unbundled HDSL Loop including manual service inquiry and facility reservation-Zone 2		2	UHL	UHL4X	18.58	169.62	75.89	39.73	19.53			20.35	10.54	13.32	13.32
	4W Unbundled HDSL Loop including manual service inquiry and facility reservation-Zone 3		3	UHL	UHL4X	31.03	169.62	75.89	39.73	19.53			20.35	10.54	13.32	13.32
	4W Unbundled HDSL Loop w/o manual service inquiry and facility reservation-Zone 1		1	UHL	UHL4W	12.40	100.09	46.60	75.75	13.97			20.35	10.54	13.32	13.32
	4W Unbundled HDSL Loop w/o manual service inquiry and facility reservation-Zone 2		2	UHL	UHL4W	18.58	100.09	46.60	75.75	13.97			20.35	10.54	13.32	13.32
	4W Unbundled HDSL Loop w/o manual service inquiry and facility reservation-Zone 3		3	UHL	UHL4W	31.03	100.09	46.60	75.75	13.97			20.35	10.54	13.32	13.32
	CLEC to CLEC Conversion Charge w/o outside dispatch			UHL	UREWO		31.99	20.02					20.35	10.54	13.32	13.32
	4-WIRE DS1 DIGITAL LOOP															
	4W DS1 Digital Loop-Zone 1		1	USL	USLXX	51.38	313.08	219.72	96.86	40.45			18.98	8.43	11.95	11.95
	4W DS1 Digital Loop-Zone 2		2	USL	USLXX	76.98	313.08	219.72	96.86	40.45			18.98	8.43	11.95	11.95
	4W DS1 Digital Loop-Zone 3		3	USL	USLXX	128.54	313.08	219.72	96.86	40.45			18.98	8.43	11.95	11.95
	Switch-As-Is Conversion rate per UNE Loop, Single LSR, (per DS1)			USL	URESL		23.42	3.30								

CATEGORY	RATE ELEMENTS	Interim	Zone	BCS	USOC	RATES($)					Svc Order Submitted Elec per LSR	Svc Order Submitted Manually per LSR	Incremental Charge - Manual Svc Order vs. Electronic-1st	Incremental Charge - Manual Svc Order vs. Electronic-Add'l	Incremental Charge - Manual Svc Order vs. Electronic-Disc 1st	Incremental Charge - Manual Svc Order vs. Electronic-Disc Add'l
							Nonrecurring		NRC Disconnect		OSS Rates($)					
						Rec	First	Add'l	First	Add'l	SOMEC	SOMAN	SOMAN	SOMAN	SOMAN	SOMAN
	Switch-As-Is Conversion rate per UNE Loop, Spreadsheet, (per DS1)			USL	URESP		24.82	4.70								
	CLEC to CLEC Conversion Charge w/o outside dispatch			USL	UREWO		130.47	40.11					20.35	10.54	13.32	13.32
4-WIRE 19.2, 56 OR 64 KBPS DIGITAL GRADE LOOP																
	4 Wire Unbundled Digital Loop 2.4 Kbps-Zone 1		1	UDL	UDL2X	27.68	207.01	141.38	90.70	44.18						
	4 Wire Unbundled Digital Loop 2.4 Kbps-Zone 2		2	UDL	UDL2X	41.47	207.01	141.38	90.70	44.18						
	4 Wire Unbundled Digital Loop 2.4 Kbps-Zone3		3	UDL	UDL2X	69.24	207.01	141.38	90.70	44.18						
	4 Wire Unbundled Digital Loop 4.8 Kbps -Zone 1		1	UDL	UDL4X	27.68	207.01	141.38	90.70	44.18						
	4 Wire Unbundled Digital Loop 4.8 Kbps-Zone 2		2	UDL	UDL4X	41.47	207.01	141.38	90.70	44.18						
	4 Wire Unbundled Digital Loop 4.8 Kbps-Zone 3		3	UDL	UDL4X	69.24	207.01	141.38	90.70	44.18						
	4 Wire Unbundled Digital Loop 9.6 Kbps-Zone 1		1	UDL	UDL9X	27.68	207.01	141.38	90.70	44.18						
	5 Wire Unbundled Digital Loop 9.6 Kbps-Zone 2		2	UDL	UDL9X	41.47	207.01	141.38	90.70	44.18						
	6 Wire Unbundled Digital Loop 9.6 Kbps-Zone 3		3	UDL	UDL9X	69.24	207.01	141.38	90.70	44.18						
	4 Wire Unbundled Digital 19.2 Kbps-Zone 1		1	UDL	UDL19	27.68	207.01	141.38	90.70	44.18			20.35	10.54	13.32	13.32
	4 Wire Unbundled Digital 19.2 Kbps-Zone 2		2	UDL	UDL19	41.47	207.01	141.38	90.70	44.18			20.35	10.54	13.32	13.32
	4 Wire Unbundled Digital 19.2 Kbps-Zone 3		3	UDL	UDL19	69.24	207.01	141.38	90.70	44.18			20.35	10.54	13.32	13.32
	4 Wire Unbundled Digital Loop 56 Kbps-Zone 1		1	UDL	UDL56	27.68	207.01	141.38	90.70	44.18			20.35	10.54	13.32	13.32
	4 Wire Unbundled Digital Loop 56 Kbps-Zone 2		2	UDL	UDL56	41.47	207.01	141.38	90.70	44.18			20.35	10.54	13.32	13.32
	4 Wire Unbundled Digital Loop 56 Kbps-Zone 3		3	UDL	UDL56	69.24	207.01	141.38	90.70	44.18			20.35	10.54	13.32	13.32
	4 Wire Unbundled Digital Loop 64 Kbps-Zone 1		1	UDL	UDL64	27.68	207.01	141.38	90.70	44.18			20.35	10.54	13.32	13.32
	4 Wire Unbundled Digital Loop 64 Kbps-Zone 2		2	UDL	UDL64	41.47	207.01	141.38	90.70	44.18			20.35	10.54	13.32	13.32
	4 Wire Unbundled Digital Loop 64 Kbps-Zone 3		3	UDL	UDL64	69.24	207.01	141.38	90.70	44.18			20.35	10.54	13.32	13.32
	Switch-As-Is Conversion rate per UNE Loop, Single LSR, (per DS0)			UDL	URESL		23.42	3.30					20.35	10.54	13.32	13.32
	Switch-As-Is Conversion rate per UNE Loop, Spreadsheet, (per DS0)			UDL	URESP		24.82	4.70								
	CLEC to CLEC Conversion Charge w/o outside dispatch			UDL	UREWO		102.28	49.82					20.35	10.54	13.32	13.32
2-WIRE Unbundled COPPER LOOP																
	2W Unbundled Copper Loop-Designed including manual service inquiry & facility reservation-Zone 1		1	UCL	UCLPB	11.74	31.99	20.02	10.65	1.41			20.35	10.54	13.32	13.32
	2W Unbundled Copper Loop-Designed including manual service inquiry & facility reservation-Zone 2		2	UCL	UCLPB	17.59	31.99	20.02	10.65	1.41			20.35	10.54	13.32	13.32
	2W Unbundled Copper Loop-Designed including manual service inquiry & facility reservation-Zone 3		3	UCL	UCLPB	29.37	31.99	20.02	10.65	1.41			20.35	10.54	13.32	13.32
	2W Unbundled Copper Loop-Designed w/o manual service inquiry and facility reservation-Zone 1		1	UCL	UCLPW	11.74	31.99	20.02	10.65	1.41			20.35	10.54	13.32	13.32
	2W Unbundled Copper Loop-Designed w/o manual service inquiry and facility reservation-Zone 2		2	UCL	UCLPW	17.59	31.99	20.02	10.65	1.41			20.35	10.54	13.32	13.32
	2W Unbundled Copper Loop-Designed w/o manual service inquiry and facility reservation-Zone 3		3	UCL	UCLPW	29.37	31.99	20.02	10.65	1.41			20.35	10.54	13.32	13.32
	Order Coordination for Unbundled Copper Loops (per loop)			UCL	UCLMC		36.52	36.52								
	CLEC to CLEC Conversion Charge w/o outside dispatch (UCL-Des)			UCL	UREWO		31.99	20.02					20.35	10.54	13.32	13.32
4-WIRE COPPER LOOP																
	4W Copper Loop-Designed including manual service inquiry and facility reservation-Zone 1		1	UCL	UCL4S	21.98	122.76	85.57	76.35	39.16			20.35	10.54	13.32	13.32
	4W Copper Loop-Designed including manual service inquiry and facility reservation-Zone 2		2	UCL	UCL4S	32.93	122.76	85.57	76.35	39.16			20.35	10.54	13.32	13.32
	4W Copper Loop-Designed including manual service inquiry and facility reservation-Zone 3		3	UCL	UCL4S	54.99	122.76	85.57	76.35	39.16			20.35	10.54	13.32	13.32
	4W Copper Loop-Designed w/o manual service inquiry and facility reservation-Zone 1		1	UCL	UCL4W	21.98	122.76	85.57	76.35	39.16			20.35	10.54	13.32	13.32
	4W Copper Loop-Designed w/o manual service inquiry and facility reservation-Zone 2		2	UCL	UCL4W	32.93	122.76	85.57	76.35	39.16			20.35	10.54	13.32	13.32
	4W Copper Loop-Designed w/o manual service inquiry and facility reservation-Zone 3		3	UCL	UCL4W	54.99	122.76	85.57	76.35	39.16			20.35	10.54	13.32	13.32
	Order Coordination for Unbundled Copper Loops (per loop)			UCL	UCLMC		36.52	36.52								
	CLEC to CLEC Conversion Charge w/o outside dispatch (UCL-Des)			UCL	UREWO		31.99	20.02					20.35	10.54	13.32	13.32
	Order Coordination for Specified Conversion Time (per LSR)			UEA, UDN, UAL, UHL, UDL, USL	OCOSL		34.29									
Rearrangements																
	EEL to UNE-L Retermination, per 2W Unbundled Voice Loop-SL2			UEA	UREEL		75.06	36.41								
	EEL to UNE-L Retermination, per 4 Wire Unbundled Voice Loop			UEA	UREEL		75.06	36.41								

UNBUNDLED NETWORK ELEMENTS - Tennessee														Attachment: 2 Exh A			
CATEGORY	RATE ELEMENTS	Interim	Zone	BCS	USOC	RATES($)					Svc Order Submitted Elec per LSR	Svc Order Submitted Manually per LSR	Incremental Charge - Manual Svc Order vs. Electronic-1st	Incremental Charge - Manual Svc Order vs. Electronic-Add'l	Incremental Charge - Manual Svc Order vs. Electronic-Disc 1st	Incremental Charge - Manual Svc Order vs. Electronic-Disc Add'l
							Nonrecurring		NRC Disconnect		OSS Rates($)					
						Rec	First	Add'l	First	Add'l	SOMEC	SOMAN	SOMAN	SOMAN	SOMAN	SOMAN
	EEL to UNE-L Retermination, per 2W ISDN Loop			UDN	UREEL		91.77	44.22								
	EEL to UNE-L Retermination, per 4 Wire Unbundled Digital Loop			UDL	UREEL		102.28	49.82								
	EEL to UNE-L Retermination, per 4 Wire Unbundled DS1 Loop			USL	UREEL		130.47	40.11								
UNE LOOP COMMINGLING																
2-WIRE ANALOG VOICE GRADE LOOP - COMMINGLING																
	2W Analog VG Loop- SL2 w/Loop or Ground Start Signaling-Zone 1		1	NTCVG	UEAL2	14.74	75.06	48.20	28.70	17.64						
	2W Analog VG Loop- SL2 w/Loop or Ground Start Signaling-Zone 2		2	NTCVG	UEAL2	22.08	75.06	48.20	28.70	17.64						
	2W Analog VG Loop- SL2 w/Loop or Ground Start Signaling-Zone 3		3	NTCVG	UEAL2	36.87	75.06	48.20	28.70	17.64						
	2W Analog VG Loop- SL2 w/Reverse Battery Signaling-Zone 1		1	NTCVG	UEAR2	14.74	75.06	48.20	28.70	17.64						
	2W Analog VG Loop- SL2 w/Reverse Battery Signaling-Zone 2		2	NTCVG	UEAR2	22.08	75.06	48.20	28.70	17.64						
	2W Analog VG Loop- SL2 w/Reverse Battery Signaling-Zone 3		3	NTCVG	UEAR2	36.87	75.06	48.20	28.70	17.64						
	Switch-As-Is Conversion rate per UNE Loop, Single LSR, (per DS0)			NTCVG	URESL		23.42	3.30								
	Switch-As-Is Conversion rate per UNE Loop, Spreadsheet, (per DS0)			NTCVG	URESP		24.82	4.70								
	CLEC to CLEC Conversion Charge w/o outside dispatch			NTCVG	UREWO		75.06	36.41								
	Loop Tagging-SL2 (SL2)			NTCVG	URETL		11.23	1.10								
4-WIRE ANALOG VOICE GRADE LOOP																
	4W Analog VG Loop-Zone 1		1	NTCVG	UEAL4	21.98	122.76	85.57	76.35	39.16						
	4W Analog VG Loop-Zone 2		2	NTCVG	UEAL4	32.93	122.76	85.57	76.35	39.16						
	4W Analog VG Loop-Zone 3		3	NTCVG	UEAL4	54.99	122.76	85.57	76.35	39.16						
	Switch-As-Is Conversion rate per UNE Loop, Single LSR, (per DS0)			NTCVG	URESL		23.42	3.30								
	Switch-As-Is Conversion rate per UNE Loop, Spreadsheet, (per DS0)			NTCVG	URESP		24.82	4.70								
	CLEC to CLEC Conversion Charge w/o outside dispatch			NTCVG	UREWO		75.06	36.41								
4-WIRE DS1 DIGITAL LOOP - COMMINGLING																
	4W DS1 Digital Loop-Zone 1		1	NTCD1	USLXX	51.38	313.08	219.72	96.86	40.45						
	4W DS1 Digital Loop-Zone 2		2	NTCD1	USLXX	76.98	313.08	219.72	96.86	40.45						
	4W DS1 Digital Loop-Zone 3		3	NTCD1	USLXX	128.54	313.08	219.72	96.86	40.45						
	Switch-As-Is Conversion rate per UNE Loop, Single LSR, (per DS1)			NTCD1	URESL	0.00	23.42	3.30	0.00	0.00						
	Switch-As-Is Conversion rate per UNE Loop, Spreadsheet, (per DS1)			NTCD1	URESP	0.00	24.82	4.70	0.00	0.00						
	CLEC to CLEC Conversion Charge w/o outside dispatch			NTCD1	UREWO	0.00	130.47	40.11	0.00	0.00						
4-WIRE 19.2, 56 OR 64 KBPS DIGITAL GRADE LOOP																
	4 Wire Unbundled Digital Loop 2.4 Kbps-Zone 1		1	NTCUD	UDL2X	27.68	207.01	141.38	90.70	44.18						
	4 Wire Unbundled Digital Loop 2.4 Kbps-Zone 2		2	NTCUD	UDL2X	41.47	207.01	141.38	90.70	44.18						
	4 Wire Unbundled Digital Loop 2.4 Kbps-Zone3		3	NTCUD	UDL2X	69.24	207.01	141.38	90.70	44.18						
	4 Wire Unbundled Digital Loop 4.8 Kbps -Zone 1		1	NTCUD	UDL4X	27.68	207.01	141.38	90.70	44.18						
	4 Wire Unbundled Digital Loop 4.8 Kbps-Zone 2		2	NTCUD	UDL4X	41.47	207.01	141.38	90.70	44.18						
	4 Wire Unbundled Digital Loop 4.8 Kbps-Zone 3		3	NTCUD	UDL4X	69.24	207.01	141.38	90.70	44.18						
	4 Wire Unbundled Digital Loop 9.6 Kbps-Zone 1		1	NTCUD	UDL9X	27.68	207.01	141.38	90.70	44.18						
	5 Wire Unbundled Digital Loop 9.6 Kbps-Zone 2		2	NTCUD	UDL9X	41.47	207.01	141.38	90.70	44.18						
	6 Wire Unbundled Digital Loop 9.6 Kbps-Zone 3		3	NTCUD	UDL9X	69.24	207.01	141.38	90.70	44.18						
	4 Wire Unbundled Digital 19.2 Kbps-Zone 1		1	NTCUD	UDL19	27.68	207.01	141.38	90.70	44.18						
	4 Wire Unbundled Digital 19.2 Kbps-Zone 2		2	NTCUD	UDL19	41.47	207.01	141.38	90.70	44.18						
	4 Wire Unbundled Digital 19.2 Kbps-Zone 3		3	NTCUD	UDL19	69.24	207.01	141.38	90.70	44.18						
	4 Wire Unbundled Digital Loop 56 Kbps-Zone 1		1	NTCUD	UDL56	27.68	207.01	141.38	90.70	44.18						
	4 Wire Unbundled Digital Loop 56 Kbps-Zone 2		2	NTCUD	UDL56	41.47	207.01	141.38	90.70	44.18						
	4 Wire Unbundled Digital Loop 56 Kbps-Zone 3		3	NTCUD	UDL56	69.24	207.01	141.38	90.70	44.18						
	4 Wire Unbundled Digital Loop 64 Kbps-Zone 1		1	NTCUD	UDL64	27.68	207.01	141.38	90.70	44.18						
	4 Wire Unbundled Digital Loop 64 Kbps-Zone 2		2	NTCUD	UDL64	41.47	207.01	141.38	90.70	44.18						
	4 Wire Unbundled Digital Loop 64 Kbps-Zone 3		3	NTCUD	UDL64	69.24	207.01	141.38	90.70	44.18						
	Switch-As-Is Conversion rate per UNE Loop, Single LSR, (per DS0)			NTCUD	URESL	0.00	23.42	3.30	0.00	0.00						
	Switch-As-Is Conversion rate per UNE Loop, Spreadsheet, (per DS0)			NTCUD	URESP	0.00	24.82	4.70	0.00	0.00						
	CLEC to CLEC Conversion Charge w/o outside dispatch			NTCUD	UREWO	0.00	102.28	49.82	0.00	0.00						
	Order Coordination for Specified Conversion Time (per LSR)			NTCVG, NTCUD, NTCD1	OCOSL		34.29									
UNBUNDLED EXCHANGE ACCESS LOOP																
2-WIRE ANALOG VOICE GRADE LOOP																
	2W Analog VG Loop- Service Level 1- Zone 1		1	UEANL	UEAL2	11.74	31.99	20.02	10.65	1.41			20.35	10.54	13.32	13.32
	2W Analog VG Loop- Service Level 1- Zone 2		2	UEANL	UEAL2	17.59	31.99	20.02	10.65	1.41			20.35	10.54	13.32	13.32
	2W Analog VG Loop- Service Level 1- Zone 3		3	UEANL	UEAL2	29.37	31.99	20.02	10.65	1.41			20.35	10.54	13.32	13.32
	2W Analog VG Loop- Service Level 1- Zone 1		1	UEANL	UEASL	11.74	31.99	20.02	10.65	1.41			20.35	10.54	13.32	13.32

CATEGORY	RATE ELEMENTS	Interim	Zone	BCS	USOC	RATES($)					Svc Order Submitted Elec per LSR	Svc Order Submitted Manually per LSR	Incremental Charge - Manual Svc Order vs. Electronic-1st	Incremental Charge - Manual Svc Order vs. Electronic-Add'l	Incremental Charge - Manual Svc Order vs. Electronic-Disc 1st	Incremental Charge - Manual Svc Order vs. Electronic-Disc Add'l
							Nonrecurring		NRC Disconnect		OSS Rates($)					
						Rec	First	Add'l	First	Add'l	SOMEC	SOMAN	SOMAN	SOMAN	SOMAN	SOMAN
	2W Analog VG Loop- Service Level 1- Zone 2		2	UEANL	UEASL	17.59	31.99	20.02	10.65	1.41			20.35	10.54	13.32	13.32
	2W Analog VG Loop- Service Level 1- Zone 3		3	UEANL	UEASL	29.37	31.99	20.02	10.65	1.41			20.35	10.54	13.32	13.32
	Tag Loop at End User Premise			UEANL	URETL		8.95	0.88								
	Loop Testing-Basic 1st Half Hour			UEANL	URET1		57.67	0.00								
	Loop Testing-Basic Additional Half Hour			UEANL	URETA		37.44	37.44								
	Manual Order Coordination for UVL-SL1s (per loop)			UEANL	UEAMC		36.52	36.52								
	Order Coordination for Specified Conversion Time for UVL-SL1 (per LSR)			UEANL	OCOSL		34.29									
	Unbundled Non-Design Voice Loop, billing for BST providing make-up (Engineering Information-E.I.)			UEANL	UEANM		25.33	25.33								
	CLEC to CLEC Conversion Charge w/o Outside Dispatch (UVL-SL1)			UEANL	UREWO		15.80	8.95					20.35	10.54	13.32	13.32
2-WIRE Unbundled COPPER LOOP																
	2W Unbundled Copper Loop-Non-Designed Zone 1		1	UEQ	UEQ2X	11.74	31.99	20.02	10.65	1.41			20.35	10.54	13.32	13.32
	2W Unbundled Copper Loop-Non-Designed-Zone 2		2	UEQ	UEQ2X	17.59	31.99	20.02	10.65	1.41			20.35	10.54	13.32	13.32
	2W Unbundled Copper Loop-Non-Designed-Zone 3		3	UEQ	UEQ2X	29.37	31.99	20.02	10.65	1.41			20.35	10.54	13.32	13.32
	Tag Loop at End User Premise			UEQ	URETL		8.95	0.88								
	Loop Testing-Basic 1st Half Hour			UEQ	URET1		57.67	0.00								
	Loop Testing-Basic Additional Half Hour			UEQ	URETA		37.44	37.44								
	Manual Order Coordination 2W Unbundled Copper Loop-Non-Designed (per loop)			UEQ	USBMC		36.52	36.52								
	Unbundled Copper Loop-Non-Design, billing for BST providing make-up (Engineering Information-E.I.)			UEQ	UEQMU		25.33	25.33					20.35	10.54	13.32	13.32
	CLEC to CLEC Conversion Charge w/o Outside Dispatch (UCL-ND)			UEQ	UREWO		14.29	7.44					20.35	10.54	13.32	13.32
LOOP MODIFICATION																
Service Order charges will only apply once per Loop																
	Unbundled Loop Modification, Removal of Load Coils-2W pair less than or equal to 18k ft, per Unbundled Loop			UAL, UHL, UCL, UEQ, ULS, UEA, UEANL, UEPSR, UEPSB	ULM2L		65.40	65.40								
	Unbundled Loop Modification Removal of Load Coils-4 Wire less than or equal to 18K ft, per Unbundled Loop			UHL, UCL, UEA	ULM4L		65.40	65.40								
	Unbundled Loop Modification Removal of Bridged Tap Removal, per unbundled loop			UAL, UHL, UCL, UEQ, ULS, UEA, UEANL, UEPSR, UEPSB	ULMBT		65.44	65.44								
SUB-LOOPS																
Sub-Loop Distribution																
	Sub-Loop-Per Cross Box Location-CLEC Feeder Facility Set-Up			UEANL, UEF	USBSA		517.25	517.25					20.35	10.54	13.32	13.32
	Sub-Loop-Per Cross Box Location-Per 25 Pair Panel Set-Up			UEANL, UEF	USBSB		42.68	42.68					20.35	10.54	13.32	13.32
	Sub-Loop-Per Building Equipment Room-CLEC Feeder Facility Set-Up			UEANL	USBSC		313.01	313.01					20.35	10.54	13.32	13.32
	Sub-Loop-Per Building Equipment Room-Per 25 Pair Panel Set-Up			UEANL	USBSD		108.06	108.06					20.35	10.54	13.32	13.32
	Sub-Loop Distribution Per 2W Analog VG Loop-Statewide			UEANL	USBN2	10.02	148.84	112.34	73.14	36.65			20.35	10.54	13.32	13.32
	Order Coordination for Unbundled Sub-Loops, per sub-loop pair			UEANL	USBMC		34.29	34.29								
	Sub-Loop Distribution Per 4W Analog VG Loop -Zone 1		1	UEANL	USBN4	6.54	106.85	51.20	74.08	11.55			20.35	10.54	13.32	13.32
	Sub-Loop Distribution Per 4W Analog VG Loop -Zone 2		2	UEANL	USBN4	9.80	106.85	51.20	74.08	11.55			20.35	10.54	13.32	13.32
	Sub-Loop Distribution Per 4W Analog VG Loop -Zone 3		3	UEANL	USBN4	16.36	106.85	51.20	74.08	11.55			20.35	10.54	13.32	13.32
	Order Coordination for Unbundled Sub-Loops, per sub-loop pair			UEANL	USBMC		34.29	34.29								
	Sub-Loop 2W Intrabuilding Network Cable (INC)			UEANL	USBR2	1.35	94.56	29.35					20.35	10.54	13.32	13.32
	Order Coordination for Unbundled Sub-Loops, per sub-loop pair			UEANL	USBMC		34.29	34.29								
	Sub-Loop 4W Intrabuilding Network Cable (INC)			UEANL	USBR4	2.26	116.14	37.10					20.35	10.54	13.32	13.32
	Order Coordination for Unbundled Sub-Loops, per sub-loop pair			UEANL	USBMC		34.29	34.29								
	Loop Testing-Basic 1st Half Hour			UEANL	URET1		57.67	0.00								
	Loop Testing-Basic Additional Half Hour			UEANL	URETA		37.44	37.44								
	2W Copper Unbundled Sub-Loop Distribution-Zone 1		1	UEF	UCS2X	4.67	81.40	25.75	70.82	9.55			20.35	10.54	13.32	13.32
	2W Copper Unbundled Sub-Loop Distribution-Zone 2		2	UEF	UCS2X	6.99	81.40	25.75	70.82	9.55			20.35	10.54	13.32	13.32
	2W Copper Unbundled Sub-Loop Distribution-Zone 3		3	UEF	UCS2X	11.67	81.40	25.75	70.82	9.55			20.35	10.54	13.32	13.32
	Order Coordination for Unbundled Sub-Loops, per sub-loop pair			UEF	USBMC		34.29	34.29								
	4 Wire Copper Unbundled Sub-Loop Distribution-Zone 1		1	UEF	UCS4X	5.85	81.74	26.08	74.08	11.55			20.35	10.54	13.32	13.32

UNBUNDLED NETWORK ELEMENTS - Tennessee														Attachment: 2 Exh A			
CATEGORY		RATE ELEMENTS	Interim	Zone	BCS	USOC	RATES($)					Svc Order Submitted Elec per LSR	Svc Order Submitted Manually per LSR	Incremental Charge - Manual Svc Order vs. Electronic-1st	Incremental Charge - Manual Svc Order vs. Electronic-Add'l	Incremental Charge - Manual Svc Order vs. Electronic-Disc 1st	Incremental Charge - Manual Svc Order vs. Electronic-Disc Add'l
								Nonrecurring		NRC Disconnect		OSS Rates($)					
							Rec	First	Add'l	First	Add'l	SOMEC	SOMAN	SOMAN	SOMAN	SOMAN	SOMAN
		4 Wire Copper Unbundled Sub-Loop Distribution-Zone 2		2	UEF	UCS4X	8.76	81.74	26.08	74.08	11.55			20.35	10.54	13.32	13.32
		4 Wire Copper Unbundled Sub-Loop Distribution-Zone 3		3	UEF	UCS4X	14.63	81.74	26.08	74.08	11.55			20.35	10.54	13.32	13.32
		Order Coordination for Unbundled Sub-Loops, per sub-loop pair			UEF	USBMC		34.29	34.29								
		Loop Tagging Service Level 1, Unbundled Copper Loop, Non-Designed and Distribution Subloops			UEF, UEANL	URETL		8.95	0.88								
		Loop Testing-Basic 1st Half Hour			UEF	URET1		57.67	0.00								
		Loop Testing-Basic Additional Half Hour			UEF	URETA		37.44	37.44								
	Unbundled Sub-Loop Modification																
		Unbundled Sub-Loop Modification-2-W Copper Dist Load Coil/Equip Removal per 2-W PR			UEF	ULM2X		335.36	7.82								
		Unbundled Sub-loop Modification-4-W Copper Dist Load Coil/Equip Removal per 4-W PR			UEF	ULM4X		335.36	7.82								
		Unbundled Loop Modification, Removal of Bridge Tap, per unbundled loop			UEF	ULMBT		528.48	9.74								
	Unbundled Network Terminating Wire (UNTW)																
		Unbundled Network Terminating Wire (UNTW) per Pair			UENTW	UENPP	0.4555	2.48	2.48	0.5814	0.5814			20.35	10.54	13.32	13.32
	Network Interface Device (NID)																
		Network Interface Device (NID)-1-2 lines			UENTW	UND12		63.46	31.06	0.6391	0.6391			20.35	10.54	13.32	13.32
		Network Interface Device (NID)-1-6 lines			UENTW	UND16		63.46	31.06	0.6522	0.6522			20.35	10.54	13.32	13.32
		Network Interface Device Cross Connect-2 W			UENTW	UNDC2		8.75	8.75					20.35	10.54	13.32	13.32
		Network Interface Device Cross Connect-4W			UENTW	UNDC4		8.75	8.75					20.35	10.54	13.32	13.32
UNE OTHER, PROVISIONING ONLY - NO RATE																	
		Unbundled Contact Name, Provisioning Only-no rate			UAL, UCL, UDC, UDL, UDN, UEA, UHL, UEANL, UEF, UEQ, UENTW, NTCVG, NTCUD, NTCD1, USL	UNECN	0.00	0.00									
		Unbundled DS1 Loop-Superframe Format Option-no rate			USL, NTCD1	CCOSF	0.00	0.00									
		Unbundled DS1 Loop-Expanded Superframe Format option-no rate			USL, NTCD1	CCOEF	0.00	0.00									
		NID-Dispatch and Service Order for NID installation			UENTW	UNDBX	0.00	0.00									
		UNTW Circuit Establishment, Provisioning Only-No Rate			UENTW	UENCE	0.00	0.00									
LOOP MAKE-UP																	
		Loop Makeup-Preordering w/o Reservation, per working or spare facility queried (Manual).			UMK	UMKLW		0.76	0.76					20.35	10.54	13.32	13.32
		Loop Makeup-Preordering With Reservation, per spare facility queried (Manual).			UMK	UMKLP		0.76	0.76					20.35	10.54	13.32	13.32
		Loop Makeup--With or w/o Reservation, per working or spare facility queried (Mechanized)			UMK	UMKMQ		0.76	0.76					20.35	10.54	13.32	13.32
LINE SPLITTING																	
	END USER ORDERING-CENTRAL OFFICE BASED																
		Line Splitting-per line activation DLEC owned splitter			UEPSR UEPSB	UREOS	0.61										
		Line Splitting-per line activation BST owned-physical			UEPSR UEPSB	UREBP	0.61	48.96	21.39	35.06	10.79			20.35	10.54	13.32	13.32
		Line Splitting-per line activation BST owned-virtual			UEPSR UEPSB	UREBV	0.61	48.96	21.39	35.06	10.79			20.35	10.54	13.32	13.32
	UNBUNDLED EXCHANGE ACCESS LOOP																
	2-WIRE ANALOG VOICE GRADE LOOP																
		2W Analog VG Loop-Service Level 1-Line Splitting- Zone 1		1	UEPSR UEPSB	UEALS	11.74	31.99	20.02	10.65	1.41			20.35	10.54	13.32	13.32
		2W Analog VG Loop-Service Level 1-Line Splitting- Zone 1		1	UEPSR UEPSB	UEABS	11.74	31.99	20.02	10.65	1.41			20.35	10.54	13.32	13.32
		2W Analog VG Loop- Service Level 1-Line Splitting-Zone 2		2	UEPSR UEPSB	UEALS	17.59	31.99	20.02	10.65	1.41			20.35	10.54	13.32	13.32
		2W Analog VG Loop- Service Level 1-Line Splitting-Zone 2		2	UEPSR UEPSB	UEABS	17.59	31.99	20.02	10.65	1.41			20.35	10.54	13.32	13.32
		2W Analog VG Loop-Service Level 1-Line Splitting-Zone 3		3	UEPSR UEPSB	UEALS	29.37	31.99	20.02	10.65	1.41			20.35	10.54	13.32	13.32
		2W Analog VG Loop-Service Level 1-Line Splitting-Zone 3		3	UEPSR UEPSB	UEABS	29.37	31.99	20.02	10.65	1.41			20.35	10.54	13.32	13.32
	PHYSICAL COLLOCATION																
		Physical Collocation-2W Cross Connects (Loop) for Line Splitting			UEPSR UEPSB	PE1LS	0.0475	11.62	9.90	10.38	8.66			0.00	0.00	0.00	0.00
	VIRTUAL COLLOCATION																
		Virtual Collocation-2W Cross Connects (Loop) for Line Splitting			UEPSR UEPSB	VE1LS	0.57	11.62	9.90	10.38	8.66			2.07	2.81	0.67	1.41
UNBUNDLED DEDICATED TRANSPORT																	
	INTEROFFICE CHANNEL - DEDICATED TRANSPORT - Stand Alone																
		Interoffice Channel-2W VG-per mile			U1TVX	1L5XX	0.0054										

UNBUNDLED NETWORK ELEMENTS - Tennessee														Attachment: 2 Exh A			
CATEGORY		RATE ELEMENTS	Interim	Zone	BCS	USOC	RATES($)					Svc Order Submitted Elec per LSR	Svc Order Submitted Manually per LSR	Incremental Charge - Manual Svc Order vs. Electronic-1st	Incremental Charge - Manual Svc Order vs. Electronic-Add'l	Incremental Charge - Manual Svc Order vs. Electronic-Disc 1st	Incremental Charge - Manual Svc Order vs. Electronic-Disc Add'l
								Nonrecurring		NRC Disconnect		OSS Rates($)					
							Rec	First	Add'l	First	Add'l	SOMEC	SOMAN	SOMAN	SOMAN	SOMAN	SOMAN
		Interoffice Channel-2W VG-Facility Termination			U1TVX	U1TV2	18.58	55.39	17.37	27.96	3.51			20.35	21.09	9.80	10.54
		Interoffice Channel-2W VG Rev Bat.-per mile			U1TVX	1L5XX	0.0054										
		Interoffice Channel-2W VG Rev Bat.-Facility Termination			U1TVX	U1TR2	18.58	55.39	17.37	27.96	3.51			20.35	21.09	9.80	10.54
		Interoffice Channel-4W VG-per mile			U1TVX	1L5XX	0.0054										
		Interoffice Channel-4- Wire VG-Facility Termination			U1TVX	U1TV4	24.09	37.87	26.02	30.78	13.07			15.08	15.08	9.80	10.54
		Interoffice Channel-56 kbps-per mile			U1TDX	1L5XX	0.0174										
		Interoffice Channel-56 kbps-Facility Termination			U1TDX	U1TD5	17.98	55.39	17.37	27.96	3.51			20.35	21.09	9.80	10.54
		Interoffice Channel-64 kbps-per mile			U1TDX	1L5XX	0.0174										
		Interoffice Channel-64 kbps-Facility Termination			U1TDX	U1TD6	17.98	55.39	17.37	27.96	3.51			20.35	21.09	9.80	10.54
		Interoffice Channel-DS1-per mile			U1TD1	1L5XX	0.3562										
		Interoffice Channel-DS1-Facility Termination			U1TD1	U1TF1	77.86	112.40	76.27	19.55	14.99			20.35	21.09	9.80	10.54
		Interoffice Channel-DS3-per mile			U1TD3	1L5XX	2.34										
		Interoffice Channel-DS3-Facility Termination			U1TD3	U1TF3	848.99	395.29	176.56	109.04	105.91			36.84	36.84	19.01	19.01
		Interoffice Channel-STS-1-per mile			U1TS1	1L5XX	2.34										
		Interoffice Channel-STS-1-Facility Termination			U1TS1	U1TFS	849.30	395.29	176.56	109.04	105.91			36.84	36.84	19.01	19.01
		Local Channel-Dedicated-4W VG -Zone 1		1	ULDVX, UNCVX	ULDV4	20.91										
		Local Channel-Dedicated-4W VG -Zone 2		2	ULDVX, UNCVX	ULDV4	27.30										
		Local Channel-Dedicated-4W VG-Zone 3		3	ULDVX, UNCVX	ULDV4	35.71										
		Local Channel-Dedicated-DS1-Zone 1		1	ULDD1, UNC1X	ULDF1	41.68										
		Local Channel-Dedicated-DS1 -Zone 2		2	ULDD1, UNC1X	ULDF1	54.43										
		Local Channel-Dedicated-DS1 -Zone 3		3	ULDD1, UNC1X	ULDF1	71.17										
		Local Channel-Dedicated-DS3-Per Mile per month			ULDD3, UNC3X	1L5NC	8.22										
		Local Channel-Dedicated-DS3-Facility Termination			ULDD3, UNC3X	ULDF3	703.00										
		Local Channel-Dedicated-STS-1- Per Mile per month			ULDS1, UNCSX	1L5NC	8.22										
		Local Channel-Dedicated-STS-1 -Facility Termination			ULDS1, UNCSX	ULDFS	689.53										
	UNBUNDLED DARK FIBER - Stand Alone or in Combination																
		Dark Fiber-Interoffice Transport, Per Four Fiber Strands, Per Route Mile Or Fraction Thereof			UDF, UDFCX	1L5DF	28.74										
		Dark Fiber-Interoffice Transport, Per Four Fiber Strands, Per Route Mile Or Fraction Thereof			UDF, UDFCX	UDF14		1,121.00	153.19								
DARK FIBER																	
		Dark Fiber, Four Fiber Strands, Per Route Mile or Fraction Thereof per month-Local Channel			UDF, UDFCX	1L5DC	67.65										
		Dark Fiber, Four Fiber Strands, Per Route Mile or Fraction Thereof per month-Local Loop			UDF, UDFCX	1L5DL	67.65										
8XX ACCESS TEN DIGIT SCREENING																	
		8XX Access Ten Digit Screening, Per Call					0.0005192										
LINE INFORMATION DATA BASE ACCESS (LIDB)																	
		LIDB Common Transport Per Query					0.0000354										
		LIDB Validation Per Query					0.0117403										
		LIDB Originating Point Code Establishment or Change			OQT, OQU	NRBPX		49.03						20.35	20.35	13.28	13.28
CALLING NAME (CNAM) SERVICE																	
		CNAM for DB Owners, Per Query					0.0010541										
		CNAM for Non DB Owners, Per Query					0.0010541										
SELECTIVE ROUTING																	
		Selective Routing Per Unique Line Class Code Per Request Per Switch						179.60	179.60					20.35	0.00	0.00	0.00
AIN SELECTIVE CARRIER ROUTING																	
		Regional Service Establishment						190,638.00						20.35			
		End Office Establishment						317.55	317.55	3.19	3.19			20.35	20.35	13.28	13.28
		Query NRC, per query					0.0206047										
AIN - BELLSOUTH AIN SMS ACCESS SERVICE																	
		AIN SMS Access Service-Service Establishment, Per State, Initial Setup			A1N	CAMSE		135.56	135.56					20.35	20.35	13.28	13.28
		AIN SMS Access Service-Port Connection-Dial/Shared Access			A1N	CAMDP		41.75	41.75					20.35	20.35	13.28	13.28
		AIN SMS Access Service-Port Connection-ISDN Access			A1N	CAM1P		41.75	41.75					20.35	20.35	13.28	13.28
		AIN SMS Access Service-User Identification Codes-Per User ID Code			A1N	CAMAU		96.63	96.63					20.35	20.35	13.28	13.28
		AIN SMS Access Service-Security Card, Per User ID Code, Initial or Replacement			A1N	CAMRC		113.67	113.67					20.35	20.35	13.28	13.28

UNBUNDLED NETWORK ELEMENTS - Tennessee														Attachment: 2 Exh A			
CATEGORY		RATE ELEMENTS	Interim	Zone	BCS	USOC	RATES($)					Svc Order Submitted Elec per LSR	Svc Order Submitted Manually per LSR	Incremental Charge - Manual Svc Order vs. Electronic-1st	Incremental Charge - Manual Svc Order vs. Electronic-Add'l	Incremental Charge - Manual Svc Order vs. Electronic-Disc 1st	Incremental Charge - Manual Svc Order vs. Electronic-Disc Add'l
								Nonrecurring		NRC Disconnect		OSS Rates($)					
							Rec	First	Add'l	First	Add'l	SOMEC	SOMAN	SOMAN	SOMAN	SOMAN	SOMAN
		AIN SMS Access Service-Storage, Per Unit (100 Kilobytes)					0.0024										
		AIN SMS Access Service-Session, Per Minute					0.0820123										
		AIN SMS Access Service-Company Performed Session, Per Minute					2.27										
HIGH CAPACITY UNBUNDLED LOCAL LOOP																	
	DS-3/STS-1 UNBUNDLED LOCAL LOOP - Stand Alone																
		DS3 Unbundled Local Loop-per mile			UE3	1L5ND	9.19										
		DS3 Unbundled Local Loop-Facility Termination			UE3	UE3PX	374.24	595.37	304.50	234.83	170.16			36.84	36.84	19.01	19.01
		STS-1Unbundled Local Loop-per mile			UDLSX	1L5ND	9.19										
		STS-1 Unbundled Local Loop-Facility Termination			UDLSX	UDLS1	389.35	595.37	304.50	234.83	170.16			36.84	36.84	19.01	19.01
ENHANCED EXTENDED LINK (EELs)																	
	Network Elements Used in Combinations																
		2W VG Loop (SL2) in Combination-Zone 1		1	UNCVX	UEAL2	14.74	108.76	35.47	72.94	10.86			31.26	10.42		
		2W VG Loop (SL2) in Combination-Zone 2		2	UNCVX	UEAL2	22.08	108.76	35.47	72.94	10.86			31.26	10.42		
		2W VG Loop (SL2) in Combination-Zone 3		3	UNCVX	UEAL2	36.87	108.76	35.47	72.94	10.86			31.26	10.42		
		4W Analog VG Loop in Combination -Zone 1		1	UNCVX	UEAL4	21.98	108.76	35.47	72.94	10.86			31.26	10.42		
		4W Analog VG Loop in Combination -Zone 2		2	UNCVX	UEAL4	32.93	108.76	35.47	72.94	10.86			31.26	10.42		
		4W Analog VG Loop in Combination -Zone 3		3	UNCVX	UEAL4	54.99	108.76	35.47	72.94	10.86			31.26	10.42		
		2W ISDN Loop in Combination-Zone 1		1	UNCNX	U1L2X	19.77	108.76	35.47	72.94	10.86			31.26	10.42		
		2W ISDN Loop in Combination-Zone 2		2	UNCNX	U1L2X	29.63	108.76	35.47	72.94	10.86			31.26	10.42		
		2W ISDN Loop in Combination-Zone 3		3	UNCNX	U1L2X	49.47	108.76	35.47	72.94	10.86			31.26	10.42		
		4W 56Kbps Digital Grade Loop in Combination-Zone 1		1	UNCDX	UDL56	27.66	108.76	35.47	72.94	10.86			20.35	10.54	13.32	
		4W 56Kbps Digital Grade Loop in Combination-Zone 2		2	UNCDX	UDL56	41.47	108.76	35.47	72.94	10.86			20.35	10.54	13.32	
		4W 56Kbps Digital Grade Loop in Combination-Zone 3		3	UNCDX	UDL56	69.24	108.76	35.47	72.94	10.86			20.35	10.54	13.32	
		4W 64Kbps Digital Grade Loop in Combination-Zone 1		1	UNCDX	UDL64	27.66	108.76	35.47	72.94	10.86			20.35	10.54	13.32	
		4W 64Kbps Digital Grade Loop in Combination-Zone 2		2	UNCDX	UDL64	41.47	108.76	35.47	72.94	10.86			20.35	10.54	13.32	
		4W 64Kbps Digital Grade Loop in Combination-Zone 3		3	UNCDX	UDL64	69.24	108.76	35.47	72.94	10.86			20.35	10.54	13.32	
		4W DS1 Digital Loop in Combination-Zone 1		1	UNC1X	USLXX	51.38	228.40	161.74	79.87	24.88			18.98	8.43	11.95	
		4W DS1 Digital Loop in Combination-Zone 2		2	UNC1X	USLXX	76.98	228.40	161.74	79.87	24.88			18.98	8.43	11.95	
		4W DS1 Digital Loop in Combination-Zone 3		3	UNC1X	USLXX	128.54	228.40	161.74	79.87	24.88			18.98	8.43	11.95	
		DS3 Local Loop in combination-per mile			UNC3X	1L5ND	9.19										
		DS3 Local Loop in combination-Facility Termination			UNC3X	UE3PX	374.24	1,260.47	628.84	106.78	45.24			36.84	36.84	19.01	19.01
		STS-1 Local Loop in combination-per mile			UNCSX	1L5ND	9.19										
		STS-1 Local Loop in combination-Facility Termination			UNCSX	UDLS1	389.35	1,260.47	628.84	79.87	24.88			36.84	36.84	19.01	19.01
		Interoffice Channel in combination-2W VG-per mile			UNCVX	1L5XX	0.0174										
		Interoffice Channel in combination-2W VG-Facility Termination			UNCVX	U1TV2	18.58	79.83	44.08	69.32	31.00			20.35	21.09	9.80	10.54
		Interoffice Channel in combination-4W VG-per mile			UNCVX	1L5XX	0.0174										
		Interoffice Channel in combination-4W VG-Facility Termination			UNCVX	U1TV4	24.09	79.83	44.08	69.32	31.00			15.08	15.08	8.66	8.66
		Interoffice Channel in combination-4W 56 kbps-per mile			UNCDX	1L5XX	0.0174										
		Interoffice Channel in combination-4W 56 kbps-Facility Termination			UNCDX	U1TD5	17.98	79.83	44.08	69.32	31.00			20.35	21.09	9.80	10.54
		Interoffice Channel in combination-4W 64 kbps-per mile			UNCDX	1L5XX	0.0174										
		Interoffice Channel in combination-4W 64 kbps-Facility Termination			UNCDX	U1TD6	17.98	79.83	44.08	69.32	31.00			20.35	21.09	9.80	10.54
		Interoffice Channel in combination-DS1-per mile			UNC1X	1L5XX	0.3562										
		Interoffice Channel in combination-DS1 Facility Termination			UNC1X	U1TF1	77.86	171.24	113.12	70.07	30.90			20.35	21.09	9.80	10.54
		Interoffice Channel in combination-DS3-per mile			UNC3X	1L5XX	2.34										
		Interoffice Channel in combination-DS3-Facility Termination			UNC3X	U1TF3	848.99	482.01	153.81	64.43	35.43			36.84	36.84	19.01	19.01
		Interoffice Channel in combination-STS-1-per mile			UNCSX	1L5XX	2.34										
		Interoffice Channel in combination-STS-1 Facility Termination			UNCSX	U1TFS	849.30	482.01	153.81	64.43	35.43			36.84	36.84	19.01	19.01
ADDITIONAL NETWORK ELEMENTS																	
	Optional Features & Functions:																
		Clear Channel Capability Extended Frame Option-per DS1	I		U1TD1, ULDD1,UNC1X	CCOEF		0.00	0.00	0.00	0.00						
		Clear Channel Capability Super FrameOption-per DS1	i		U1TD1, ULDD1,UNC1X	CCOSF		0.00	0.00	0.00	0.00						
		Clear Channel Capability (SF/ESF) Option-Subsequent Activity-per DS1	I		ULDD1, U1TD1, UNC1X, USL	NRCCC		185.16	23.86	2.03	0.79						
		C-bit Parity Option-Subsequent Activity-per DS3	i		U1TD3, ULDD3, UE3, UNC3X	NRCC3		219.46	7.68	0.7637							
		DS1/DS0 Channel System			UNC1X	MQ1	80.77	105.76	14.48	3.04	2.74						
		DS3/DS1Channel System			UNC3X, UNCSX	MQ3	222.98	156.02	49.41	17.12	6.77			20.35	9.80	11.49	1.18

UNBUNDLED NETWORK ELEMENTS - Tennessee														Attachment: 2 Exh A			
CATEGORY		RATE ELEMENTS	Interim	Zone	BCS	USOC	RATES($)					Svc Order Submitted Elec per LSR	Svc Order Submitted Manually per LSR	Incremental Charge - Manual Svc Order vs. Electronic-1st	Incremental Charge - Manual Svc Order vs. Electronic-Add'l	Incremental Charge - Manual Svc Order vs. Electronic-Disc 1st	Incremental Charge - Manual Svc Order vs. Electronic-Disc Add'l
								Nonrecurring		NRC Disconnect		OSS Rates($)					
							Rec	First	Add'l	First	Add'l	SOMEC	SOMAN	SOMAN	SOMAN	SOMAN	SOMAN
		VG COCI in combination			UNCVX	1D1VG	0.91	5.70	4.42								
		VG COCI-for Stand Alone Local Loop			UEA	1D1VG	0.91	5.70	4.42								
		VG COCI-for connection to a channelized DS1 Local Channel in the same SWC as collocation			U1TUC	1D1VG	0.91	5.70	4.42								
		OCU-DP COCI (2.4-64kbs) in combination			UNCDX	1D1DD	1.82	5.70	4.42					20.35	9.80	11.49	1.18
		OCU-DP COCI (2.4-64kbs)-for Stand Alone Local Loop			UDL	1D1DD	1.82	5.70	4.42								
		OCU-DP COCI (2.4-64kbs)-for connection to a channelized DS1 Local Channel in the same SWC as collocation			U1TUD	1D1DD	1.82	5.70	4.42								
		2W ISDN COCI (BRITE) in combination			UNCNX	UC1CA	17.58	5.70	4.42					20.35	9.80	11.49	1.18
		2W ISDN COCI (BRITE)-for a Local Loop			UDN	UC1CA	17.58	5.70	4.42								
		2W ISDN COCI (BRITE)-for connection to a channelized DS1 Local Channel in the same SWC as collocation			U1TUB	UC1CA	17.58	5.70	4.42								
		DS1 COCI in combination			UNC1X	UC1D1	17.58	5.70	4.42					20.35	9.80	11.49	1.18
		DS1 COCI-for Stand Alone Local Channel			ULDD1	UC1D1	17.58	5.70	4.42								
		DS1 COCI-for Stand Alone Interoffice Channel			U1TD1	UC1D1	17.58	5.70	4.42								
		DS1 COCI-for Stand Alone Local Loop			USL	UC1D1	17.58	5.70	4.42								
		DS1 COCI-for connection to a channelized DS1 Local Channel in the same SWC as collocation			U1TUA	UC1D1	17.58	5.70	4.42								
		Wholesale to UNE, Switch-As-Is Conversion Charge			UNCVX, U1TVX, UNCDX, U1TDX, UNC1X, U1TD1,UNC3X, U1TD3, UNCSX, U1TS1, UDF,UDFCX	UNCCC		52.73	24.62								
		Unbundled Misc Rate Element, SNE SAI, Single Network Element-Switch As Is Non-recurring Charge, per circuit (LSR)	I		U1TVX, U1TDX, U1TD1, U1TD3, U1TS1, UDF, UE3	URESL		34.53	15.11								
		Unbundled Misc Rate Element, SNE SAI, Single Network Element-Switch As Is Non-recurring Charge, incremental charge per circuit on a spreadsheet	i		U1TVX, U1TDX, U1TD1, U1TD3, U1TS1, UDF, UE3	URESP		1.40	1.40								
		UNE Reconfiguration Change Charge per Circuit	I		UNC1X	URERC		35.00	35.00								
		UNE Reconfiguration Change Charge per Circuit Project Managed	I		UNC1X	URERP		1.40	1.40								
		UNE Reconfiguration Change Charge per Circuit	I		UNC1X	URERC		35.00	35.00								
		UNE Reconfiguration Change Charge per Circuit Project Managed	I		UNC1X	URERP		1.40	1.40								
	Access to DCS - Customer Reconfiguration (FlexServ)																
		Customer Reconfiguration Establishment						2.78		3.32							
		DS1 DCS Termination with DS0 Switching					23.35	41.14	34.25	29.94	24.08						
		DS1 DCS Termination with DS1 Switching					13.45	27.79	20.90	21.99	16.12						
		DS3 DCS Termination with DS1 Switching					150.88	41.14	34.25	29.94	24.08						
	Node (SynchroNet)																
		Node per month			UNCDX	UNCNT	17.11										
	Service Rearrangements																
		NRC-Change in Facility Assignment per circuit Service Rearrangement	I		U1TVX, U1TDX, UEA, UDL, U1TUC, U1TUD, U1TUB, ULDVX, ULDDX, UNCVX, UNCDX, UNC1X	URETD		130.47	40.11								
		NRC-Change in Facility Assignment per circuit Project Management (added to CFA per circuit if project managed)	I		U1TVX, U1TDX, UEA, UDL, U1TUC, U1TUD, U1TUB, ULDVX, ULDDX, UNCVX, UNCDX, UNC1X	URETB		1.28	1.28								
		NRC-Order Coordination Specific Time-Dedicated Transport	I		UNC1X	OCOSR		18.93	18.93								
COMMINGLING																	

CATEGORY	RATE ELEMENTS	Interim	Zone	BCS	USOC	RATES($)					Svc Order Submitted Elec per LSR	Svc Order Submitted Manually per LSR	Incremental Charge - Manual Svc Order vs. Electronic-1st	Incremental Charge - Manual Svc Order vs. Electronic-Add'l	Incremental Charge - Manual Svc Order vs. Electronic-Disc 1st	Incremental Charge - Manual Svc Order vs. Electronic-Disc Add'l
							Nonrecurring		NRC Disconnect		OSS Rates($)					
						Rec	First	Add'l	First	Add'l	SOMEC	SOMAN	SOMAN	SOMAN	SOMAN	SOMAN
	Commingling Authorization			UNCVX, UNCDX, UNC1X, UNC3X, UNCSX, U1TD1, U1TD3, U1TS1, UE3, UDLSX, U1TVX, U1TDX, U1TUB, ULDVX, ULDD1, ULDD3, ULDS1	CMGAU	0.00	0.00	0.00	0.00	0.00						
Commingled (UNE part of single bandwidth circuit)																
	Commingled VG COCI			XDV2X, NTCVG	1D1VG	1.82	5.70	4.42								
	Commingled Digital COCI			XDV6X, NTCUD	1D1DD	0.91	5.70	4.42								
	Commingled ISDN COCI			XDD4X	UC1CA	17.58	5.70	4.42								
	Commingled 2W VG Interoffice Channel Facility Termination			XDV2X	U1TV2	18.58	79.83	44.08	69.32	31.00						
	Commingled 4W VG Interoffice Channel Facility Termination			XDV6X	U1TV4	24.09	79.83	44.08	69.32	31.00						
	Commingled 56kbps Interoffice Channel Facility Termination			XDD4X	U1TD5	17.98	79.83	44.08	69.32	31.00						
	Commingled 64kbps Interoffice Channel Facility Termination			XDD4X	U1TD6	17.98	79.83	44.08	69.32	31.00						
	Commingled VG/DS0 Interoffice Channel per mile			XDV2X, XDV6X, XDD4X	1L5XX	0.0174										
	Commingled 2W Local Loop Zone 1		1	XDV2X	UEAL2	14.74	108.76	35.47	72.94	10.86						
	Commingled 2W Local Loop Zone 2		2	XDV2X	UEAL2	22.08	108.76	35.47	72.94	10.86						
	Commingled 2W Local Loop Zone 3		3	XDV2X	UEAL2	36.87	108.76	35.47	72.94	10.86						
	Commingled 4W Local Loop Zone 1		1	XDV6X	UEAL4	21.98	108.76	35.47	72.94	10.86						
	Commingled 4W Local Loop Zone 2		2	XDV6X	UEAL4	32.93	108.76	35.47	72.94	10.86						
	Commingled 4W Local Loop Zone 3		3	XDV6X	UEAL4	54.99	108.76	35.47	72.94	10.86						
	Commingled 56kbps Local Loop Zone 1		1	XDD4X	UDL56	27.68	108.76	35.47	72.94	10.86						
	Commingled 56kbps Local Loop Zone 2		2	XDD4X	UDL56	41.47	108.76	35.47	72.94	10.86						
	Commingled 56kbps Local Loop Zone 3		3	XDD4X	UDL56	69.24	108.76	35.47	72.94	10.86						
	Commingled 64kbps Local Loop Zone 1		1	XDD4X	UDL64	27.68	108.76	35.47	72.94	10.86						
	Commingled 64kbps Local Loop Zone 2		2	XDD4X	UDL64	41.47	108.76	35.47	72.94	10.86						
	Commingled 64kbps Local Loop Zone 3		3	XDD4X	UDL64	69.24	108.76	35.47	72.94	10.86						
	Commingled ISDN Local Loop Zone 1		1	XDD4X	U1L2X	19.77	108.76	35.47	72.94	10.86						
	Commingled ISDN Local Loop Zone 2		2	XDD4X	U1L2X	29.63	108.76	35.47	72.94	10.86						
	Commingled ISDN Local Loop Zone 3		3	XDD4X	U1L2X	49.47	108.76	35.47	72.94	10.86						
	Commingled DS1 COCI			XDH1X, NTCD1	UC1D1	17.58	5.70	4.42								
	Commingled DS1 Interoffice Channel Facility Termination			XDH1X	U1TF1	77.86	171.24	113.12	70.07	30.90						
	Commingled DS1 Interoffice Channel per mile			XDH1X	1L5XX	0.3562										
	Commingled DS1/DS0 channelSystem			XDH1X	MQ1	80.77	105.76	14.48	3.04	2.74						
	Commingled DS1 Local Loop Zone 1		1	XDH1X	USLXX	51.38	228.40	161.74	79.87	24.88						
	Commingled DS1 Local Loop Zone 2		2	XDH1X	USLXX	76.98	228.40	161.74	79.87	24.88						
	Commingled DS1 Local Loop Zone 3		3	XDH1X	USLXX	128.54	228.40	161.74	79.87	24.88						
	Commingled DS3 Local Loop Facility Termination			HFQC6	UE3PX	374.24	1,260.47	628.84	106.78	45.24						
	Commingled DS3/STS-1 Local Loop per mile			HFQC6, HFRST	1L5ND	9.19										
	Commingled STS-1 Local Loop Facility Termination			HFRST	UDLS1	389.35	1,260.47	628.84	79.87	24.88						
	Commingled DS3/DS1 channelSystem			HFQC6	MQ3	222.98	156.02	49.41	17.12	6.77						
	Commingled DS3 Interoffice Channel Facility Termination			HFQC6	U1TF3	848.99	482.01	153.81	64.43	35.43						
	Commingled DS3 Interoffice Channel per mile			HFQC6	1L5XX	2.34										
	Commingled STS-1Interoffice Channel Facility Termination			HFRST	U1TFS	849.30	482.01	153.81	64.43	35.43						
	Commingled STS-1Interoffice Channel per mile			HFRST	1L5XX	2.34										
	Commingled Dark Fiber-Interoffice Transport, Per Four Fiber Strands, Per Route Mile Or Fraction Thereof			HEQDL	1L5DF	28.74										
	Commingled Dark Fiber-Interoffice Transport, Per Four Fiber Strands, Per Route Mile Or Fraction Thereof			HEQDL	UDF14		1,121.00	153.19	0.00	0.00						
SIGNALING (CCS7)																
	NOTE:"bk" beside a rate indicates that the parties have agreed to bill and keep for that element pursuant to the terms and conditions in Attachment 3.															
	CCS7 Signaling Usage, Per TCAP Message					0.0000916bk										
	CCS7 Signaling Usage, Per ISUP Message					0.0000373bk										
LNP Query Service																
	LNP Charge Per query					0.0009277										

CATEGORY	RATE ELEMENTS	Interim	Zone	BCS	USOC	RATES($)					Svc Order Submitted Elec per LSR	Svc Order Submitted Manually per LSR	Incremental Charge - Manual Svc Order vs. Electronic-1st	Incremental Charge - Manual Svc Order vs. Electronic-Add'l	Incremental Charge - Manual Svc Order vs. Electronic-Disc 1st	Incremental Charge - Manual Svc Order vs. Electronic-Disc Add'l
							Nonrecurring		NRC Disconnect		OSS Rates($)					
						Rec	First	Add'l	First	Add'l	SOMEC	SOMAN	SOMAN	SOMAN	SOMAN	SOMAN
	LNP Service Establishment Manual						23.60	13.83	23.60	12.71						
	LNP Service Provisioning with Point Code Establishment						1,119.00	571.71	1,119.00	571.71						
911 PBX LOCATE																
911 PBX LOCATE DATABASE CAPABILITY																
	Service Establishment per CLEC per End User Account			9PBDC	9PBEU		1,706.00									
	Changes to TN Range or Customer Profile			9PBDC	9PBTN		170.69									
	Per Telephone Number (Monthly)			9PBDC	9PBMM	0.07										
	Change Company (Service Provider) ID			9PBDC	9PBPC		501.06									
	PBX Locate Service Support per CLEC (MonthIt)			9PBDC	9PBMR	191.92										
	Service Order Charge			9PBDC	9PBSC		23.20									
911 PBX LOCATE TRANSPORT COMPONENT																
See Att 3																
Note: Rates displaying an "I" in Interim column are interim as a result of a Commission order.																
UNBUNDLED LOCAL EXCHANGE SWITCHING(PORTS)																
The Exchange Switching Port Rates Reflected Here Apply to Embedded Base Switching Ports as of March 10, 2005 and Consist of the TELRIC Cost Based Rates Plus $1.00 in Accordance with the TRRO.																
Exchange Ports																
NOTE: Although the Port Rate includes all available features in GA, KY, LA & TN, the desired features will need to be ordered using retail USOCs																
2-WIRE VOICE GRADE LINE PORT RATES (RES)																
	Exchange Ports-2W Analog Line Port- Res.			UEPSR	UEPRL	2.89	9.93	9.19	3.66	2.92			20.35	10.54	13.32	1.40
	Exchange Ports-2W Analog Line Port with Caller ID-Res.			UEPSR	UEPRC	2.89	9.93	9.19	3.66	2.92			20.35	10.54	13.32	1.40
	Exchange Ports-2W Analog Line Port outgoing only-Res.			UEPSR	UEPRO	2.89	9.93	9.19	3.66	2.92			20.35	10.54	13.32	1.40
	Exchange Ports-2W VG unbundled TN extended local dialing parity Port with Caller ID-Res.			UEPSR	UEPAQ	2.89	9.93	9.19	3.66	2.92			20.35	10.54	13.32	1.40
	Exchange Ports-2W VG unbundled TN Area Plus with Caller ID-Res (AC7)			UEPSR	UEPAH	2.89	9.93	9.19	3.66	2.92			20.35	10.54	13.32	1.40
	Exchange Ports-2W VG unbundled TN Area Calling port with Caller ID-Res (F2R)			UEPSR	UEPAK	2.89	9.93	9.19	3.66	2.92			20.35	10.54	13.32	1.40
	Exchange Ports-2W VG unbundled TN Area Calling port with Caller ID-Res (TACER)			UEPSR	UEPAL	2.89	9.93	9.19	3.66	2.92			20.35	10.54	13.32	1.40
	Exchange Ports-2W VG unbundled TN Area Calling port with Caller ID-Res (TACSR)			UEPSR	UEPAM	2.89	9.93	9.19	3.66	2.92			20.35	10.54	13.32	1.40
	Exchange Ports-2W VG unbundled TN Area Calling port with Caller ID-Res (1MF2X)			UEPSR	UEPAN	2.89	9.93	9.19	3.66	2.92			20.35	10.54	13.32	1.40
	Exchange Ports-2W VG unbundled TN Area Calling port with Caller ID-Res (2MR)			UEPSR	UEPAO	2.89	9.93	9.19	3.66	2.92			20.35	10.54	13.32	1.40
	Exchange Ports-2W VG unbundled res, low usage line port with Caller ID (LUM)			UEPSR	UEPAP	2.89	9.93	9.19	3.66	2.92			20.35	10.54	13.32	1.40
	Exchange Port-2W VG TN Residence Dialing Plan w/o Caller ID			UEPSR	UEPWN	2.89	9.93	9.19	3.66	2.92			20.35	10.54	13.32	1.40
	Exchange Port-2W VG TN Residence Area Plus w/o Caller ID			UEPSR	UEPRR	2.89	9.93	9.19	3.66	2.92			20.35	10.54	13.32	1.40
	2W voice unbundled Low Usage Line Port w/o Caller ID Capability			UEPSR	UEPRT	2.89	9.93	9.19	3.66	2.92			20.35	10.54	13.32	1.40
	Subsequent Activity			UEPSR	USASC	0.00	0.00	0.00					20.35	10.54	13.32	1.40
FEATURES																
	All Available Vertical Features			UEPSR	UEPVF	0.00	0.00	0.00					20.35	10.54	13.32	1.40
2-WIRE VOICE GRADE LINE PORT RATES (BUS)																
	Exchange Ports-2W Analog Line Port w/o Caller ID-Bus			UEPSB	UEPBL	2.89	9.93	9.19	3.66	2.92			20.35	10.54	13.32	1.40
	Exchange Ports-2W VG unbundled Line Port with unbundled port with Caller+E484 ID-Bus.			UEPSB	UEPBC	2.89	9.93	9.19	3.66	2.92			20.35	10.54	13.32	1.40
	Exchange Ports-2W Analog Line Port outgoing only-Bus.			UEPSB	UEPBO	2.89	9.93	9.19	3.66	2.92			20.35	10.54	13.32	1.40
	Exchange Ports-2W VG unbundled TN extended local dialing parity Port with Caller ID-Bus.			UEPSB	UEPAV	2.89	9.93	9.19	3.66	2.92			20.35	10.54	13.32	1.40
	Exhange Ports-2W VG unbundled incoming only port with Caller ID-Bus			UEPSB	UEPB1	2.89	9.93	9.19	3.66	2.92			20.35	10.54	13.32	1.40
	Exchange Ports-2W VG unbundled TN Bus 2-Way Area Calling Port Economy Option-Bus (TACC1)			UEPSB	UEPAC	2.89	9.93	9.19	3.66	2.92			20.35	10.54	13.32	1.40
	Exchange Ports-2W VG unbundled TN Bus 2-Way Area Calling Port Standard Option-Bus (TACC2)			UEPSB	UEPAD	2.89	9.93	9.19	3.66	2.92			20.35	10.54	13.32	1.40
	Exchange Ports-2-W VG unbundled TN Bus 2-Way Collierville & Memphis Local Calling Port-Bus (B2F)			UEPSB	UEPAE	2.89	9.93	9.19	3.66	2.92			20.35	10.54	13.32	1.40

CATEGORY	RATE ELEMENTS	Interim	Zone	BCS	USOC	RATES($)					Svc Order Submitted Elec per LSR	Svc Order Submitted Manually per LSR	Incremental Charge - Manual Svc Order vs. Electronic-1st	Incremental Charge - Manual Svc Order vs. Electronic-Add'l	Incremental Charge - Manual Svc Order vs. Electronic-Disc 1st	Incremental Charge - Manual Svc Order vs. Electronic-Disc Add'l
							Nonrecurring		NRC Disconnect		OSS Rates($)					
						Rec	First	Add'l	First	Add'l	SOMEC	SOMAN	SOMAN	SOMAN	SOMAN	SOMAN
	Exchange Ports-2-W VG unbundled TN Bus 2-Way Collierville & Memphis Local Calling Port			UEPSB	UEPB2	2.89	9.93	9.19	3.66	2.92			20.35	10.54	13.32	1.40
	Exchange Ports-2-W VG unbundled TN, Business Line Inward, Collierville & Memphis Local Calling Plan			UEPSB	UEPB3	2.89	9.93	9.19	3.66	2.92			20.35	10.54	13.32	1.40
	Exchange Ports-2W Voice TN Business Dialing Plan w/o Caller ID			UEPSB	UEPWO	2.89	9.93	9.19	3.66	2.92			20.35	10.54	13.32	1.40
	2W voice unbundled Incoming Only Port w/o Caller ID Capability			UEPSB	UEPBE	2.89	9.93	9.19	3.66	2.92			20.35	10.54	13.32	1.40
	Subsequent Activity			UEPSB	USASC	0.00	0.00	0.00					20.35	10.54	13.32	1.40
FEATURES																
	All Available Vertical Features			UEPSB	UEPVF	0.00	0.00	0.00					20.35	10.54	13.32	1.40
EXCHANGE PORT RATES (DID & PBX)																
	2W VG Unbundled 2-Way PBX Trunk-Res			UEPSE	UEPRD	2.79	9.93	9.19	3.66	2.92			20.35	10.54	13.32	1.40
	2W VG Line Side Unbundled 2-Way PBX Trunk-Bus			UEPSP	UEPPC	2.79	9.93	9.19	3.66	2.92			20.35	10.54	13.32	1.40
	2W VG Line Side Unbundled Outward PBX Trunk-Bus			UEPSP	UEPPO	2.79	9.93	9.19	3.66	2.92			20.35	10.54	13.32	1.40
	2W VG Line Side Unbundled Incoming PBX Trunk-Bus			UEPSP	UEPP1	2.79	9.93	9.19	3.66	2.92			20.35	10.54	13.32	1.40
	2W Analog Long Distance Terminal PBX Trunk-Bus			UEPSP	UEPLD	2.79	9.93	9.19	3.66	2.92			20.35	10.54	13.32	1.40
	2W Analog TN 2-Way Calling Plan PBX Trunk-Bus			UEPSP	UEPT2	2.79	9.93	9.19	3.66	2.92			20.35	10.54	13.32	1.40
	2W TN Outward Calling Plan PBX Trunk-Bus			UEPSP	UEPTO	2.79	9.93	9.19	3.66	2.92			20.35	10.54	13.32	1.40
	2W Voice Unbundled PBX LD Terminal Ports			UEPSP	UEPLD	2.79	9.93	9.19	3.66	2.92			20.35	10.54	13.32	1.40
	2W Voice Unbundled 2-Way PBX TN Calling Port			UEPSP	UEPT2	2.79	9.93	9.19	3.66	2.92			20.35	10.54	13.32	1.40
	2W Voice Unbundled 1-Way Outgoing PBX TN Calling Port			UEPSP	UEPTO	2.79	9.93	9.19	3.66	2.92			20.35	10.54	13.32	1.40
	2W Vice Unbundled 2-Way PBX Usage Port			UEPSP	UEPXA	2.79	9.93	9.19	3.66	2.92			20.35	10.54	13.32	1.40
	2W Voice Unbundled PBX Toll Terminal Hotel Ports			UEPSP	UEPXB	2.79	9.93	9.19	3.66	2.92			20.35	10.54	13.32	1.40
	2W Voice Unbundled PBX LD DDD Terminals Port			UEPSP	UEPXC	2.79	9.93	9.19	3.66	2.92			20.35	10.54	13.32	1.40
	2W Voice Unbundled PBX LD Terminal Switchboard Port			UEPSP	UEPXD	2.79	9.93	9.19	3.66	2.92			20.35	10.54	13.32	1.40
	2W Voice Unbundled PBX LD Terminal Switchboard IDD Capable Port			UEPSP	UEPXE	2.79	9.93	9.19	3.66	2.92			20.35	10.54	13.32	1.40
	2W Voice Unbundled 2-Way PBX Hotel/Hospital Economy Administrative Calling Port			UEPSP	UEPXL	2.79	9.93	9.19	3.66	2.92			20.35	10.54	13.32	1.40
	2W Voice Unbundled 2-Way PBX Hotel/Hospital Economy Rm Calling Port			UEPSP	UEPXM	2.79	9.93	9.19	3.66	2.92			20.35	10.54	13.32	1.40
	2-W Voice Unbundled 1-Way Out PBX Hotel/Hospital Economy Administrative Calling Port TN Calling Port			UEPSP	UEPXN	2.79	9.93	9.19	3.66	2.92			20.35	10.54	13.32	1.40
	2W Voice Unbundled 1-Way Outgoing PBX Hotel/Hospital Discount Rm Calling Port			UEPSP	UEPXO	2.79	9.93	9.19	3.66	2.92			20.35	10.54	13.32	1.40
	Unbundled Exchange Ports, PBX Trunk Combination, Collierville and Memphis Local Calling Plan			UEPSP	UEPA6	2.79	9.93	9.19	3.66	2.92			20.35	10.54	13.32	1.40
	Unbundled Exchange Ports, PBX Trunk Combination, first trunk, Collierville and Memphis Local Calling Plan			UEPSP	UEPA7	2.79	9.93	9.19	3.66	2.92			20.35	10.54	13.32	1.40
	2W Voice Unbundled 1-Way Outgoing PBX Measured Port			UEPSP	UEPXS	2.79	9.93	9.19	3.66	2.92			20.35	10.54	13.32	1.40
	2W Voice Unbundled PBX Collierville and Memphis Calling Port			UEPSP	UEPXU	2.79	9.93	9.19	3.66	2.92			20.35	10.54	13.32	1.40
	2W Voice Unbundled 2-Way PBX TN RegionServ Calling Port			UEPSP	UEPXV	2.79	9.93	9.19	3.66	2.92			20.35	10.54	13.32	1.40
	Subsequent Activity			UEPSP	USASC	0.00	0.00	0.00					20.35	10.54	13.32	1.40
FEATURES																
	All Available Vertical Features			UEPSP UEPSE	UEPVF	0.00	0.00	0.00								
NOTE: Transmission/usage charges associated with POTS circuit switched usage will also apply to circuit switched voice and/or circuit switched data transmission by B-Channels associated with 2-wire ISDN ports.																
NOTE: Access to B Channel or D Channel Packet capabilities will be available only through BFR/New Business Request Process. Rates for the packet capabilities will be determined via the Bona Fide Request/New Business Request Process.																
2-WIRE VOICE GRADE LINE PORT RATES (DID)																
	Exchange Ports-2W DID Port			UEPEX	UEPP2	9.97	47.75	47.01	9.21	8.47			20.35	10.54	13.32	1.40
2-WIRE VOICE GRADE LINE PORT RATES (ISDN-BRI)																
	Exchange Ports-2W ISDN Port (See Notes below.)			UEPTX, UEPSX	U1PMA	17.26	30.23	29.49	4.10	4.10			20.35	10.54	13.32	1.40
	All Features Offered			UEPTX, UEPSX	UEPVF	0.00	0.00	0.00								
	Exchange Ports-2W ISDN Port -- Channel Profiles			UEPTX, UEPSX	U1UMA	0.00	0.00	0.00								
NOTE: Transmission/usage charges associated with POTS circuit switched usage will also apply to circuit switched voice and/or circuit switched data transmission by B-Channels associated with 2-wire ISDN ports.																
NOTE: Access to B Channel or D Channel Packet capabilities will be available only through BFR/New Business Request Process. Rates for the packet capabilities will be determined via the Bona Fide Request/New Business Request Process.																
UNBUNDLED PORT with REMOTE CALL FORWARDING CAPABILITY																
UNBUNDLED REMOTE CALL FORWARDING SERVICE - RESIDENCE																
	Unbundled Remote Call Forwarding Service, Area Calling, Res			UEPVR	UERAC	2.89	9.93	9.19	3.66	2.92			20.35	10.54	13.32	1.40
	Unbundled Remote Call Forwarding Service, Local Calling-Res			UEPVR	UERLC	2.89	9.93	9.19	3.66	2.92			20.35	10.54	13.32	1.40
	Unbundled Remote Call Forwarding Service, InterLATA-Res			UEPVR	UERTE	2.89	9.93	9.19	3.66	2.92			20.35	10.54	13.32	1.40

UNBUNDLED NETWORK ELEMENTS - Tennessee														Attachment: 2 Exh A			
CATEGORY		RATE ELEMENTS	Interim	Zone	BCS	USOC	RATES($)					Svc Order Submitted Elec per LSR	Svc Order Submitted Manually per LSR	Incremental Charge - Manual Svc Order vs. Electronic-1st	Incremental Charge - Manual Svc Order vs. Electronic-Add'l	Incremental Charge - Manual Svc Order vs. Electronic-Disc 1st	Incremental Charge - Manual Svc Order vs. Electronic-Disc Add'l
								Nonrecurring		NRC Disconnect				OSS Rates($)			
							Rec	First	Add'l	First	Add'l	SOMEC	SOMAN	SOMAN	SOMAN	SOMAN	SOMAN
		Unbundled Remote Call Forwarding Service, IntraLATA-Res			UEPVR	UERTR	2.89	9.93	9.19	3.66	2.92			20.35	10.54	13.32	1.40
	Non-Recurring																
		Unbundled Remote Call Forwarding Service -Conversion-Switch-as-is			UEPVR	USAC2		1.03	0.29								
		Unbundled Remote Call Forwarding Service -Conversion with allowed change (PIC and LPIC)			UEPVR	USACC		1.03	0.29								
	UNBUNDLED REMOTE CALL FORWARDING - Bus																
		Unbundled Remote Call Forwarding Service, Area Calling-Bus			UEPVB	UERAC	2.89	9.93	9.19	3.66	2.92			20.35	10.54	13.32	1.40
		Unbundled Remote Call Forwarding Service, Local Calling-Bus			UEPVB	UERLC	2.89	9.93	9.19	3.66	2.92			20.35	10.54	13.32	1.40
		Unbundled Remote Call Forwarding Service, InterLATA-Bus			UEPVB	UERTE	2.89	9.93	9.19	3.66	2.92			20.35	10.54	13.32	1.40
		Unbundled Remote Call Forwarding Service, IntraLATA-Bus			UEPVB	UERTR	2.89	9.93	9.19	3.66	2.92			20.35	10.54	13.32	1.40
		Unbundled Remote Call Forwarding Service Expanded and Exception Local Calling			UEPVB	UERVJ	2.89	9.93	9.19	3.66	2.92			20.35	10.54	13.32	1.40
	Non-Recurring																
		Unbundled Remote Call Forwarding Service-Conversion-Switch-as-is			UEPVB	USAC2		1.03	0.29								
		Unbundled Remote Call Forwarding Service -Conversion with allowed change (PIC and LPIC)			UEPVB	USACC		1.03	0.29								
UNBUNDLED LOCAL SWITCHING, PORT USAGE																	
	End Office Switching (Port Usage)																
		End Office Switching Function, Per MOU					0.0008041										
	Tandem Switching (Port Usage) (Local or Access Tandem)																
		Tandem Switching Function Per MOU					0.0009778										
		Tandem Switching Function Per MOU (Melded)					.000380364										
	Melded Factor: 38.90% of the Tandem Rate																
	Common Transport																
		Common Transport-Per Mile, Per MOU					0.0000064										
		Common Transport-Facilities Termination Per MOU					0.0003871										
UNBUNDLED PORT/LOOP COMBINATIONS - COST BASED RATES																	
	>Cost Based Rates are applied where BellSouth is required by FCC and/or State Commission rule to provide Unbundled Local Switching or Switch Ports.																
	>The UNE-P Switching Port Rates Reflected in the Cost Based Section Apply to Embedded Base UNE-Ps as of March 10, 2005 and Consist of the TELRIC Cost Based Rates Plus $1.00 in Accordance with the TRRO.																
	>Features shall apply to the Unbundled Port/Loop Combination - Cost Based Rate section in the same manner as they are applied to the Stand-Alone Unbundled Port section of this Rate Exhibit.																
	>End Office and Tandem Switching Usage and Common Transport Usage rates in the Port section of this rate exhibit shall apply to all combinations of loop/port network elements except for UNE Coin Port/Loop Combinations.																
	>The first and additional Port nonrecurring charges apply to Not Currently Combined Combos. For Currently Combined Combos the nonrecurring charges shall be those identified in the Nonrecurring - Currently Combined sections.																
	2-WIRE VOICE GRADE LOOP WITH 2-WIRE LINE PORT (RES)																
	UNE Port/Loop Combination Rates																
		2W VG Loop/Port Combo-Zone 1					15.18										
		2W VG Loop/Port Combo-Zone 2					19.01										
		2W VG Loop/Port Combo-Zone 3					24.02										
	UNE Loop Rates																
		2W VG Loop (SL1)-Zone 1		1	UEPRX	UEPLX	12.48										
		2W VG Loop (SL1)-Zone 2		2	UEPRX	UEPLX	16.31										
		2W VG Loop (SL1)-Zone 3		3	UEPRX	UEPLX	21.32										
	2-Wire Voice Grade Line Port Rates (Res)																
		2W voice unbundled port-residence			UEPRX	UEPRL	2.70	22.14	15.25	8.45	3.91			20.35	10.54	13.32	13.32
		2W voice unbundled port with Caller ID-res			UEPRX	UEPRC	2.70	22.14	15.25	8.45	3.91			20.35	10.54	13.32	13.32
		2W voice unbundled port outgoing only-res			UEPRX	UEPRO	2.70	22.14	15.25	8.45	3.91			20.35	10.54	13.32	13.32
		2W VG unbundled TN extended local dialing parity port with Caller ID-res			UEPRX	UEPAQ	2.70	22.14	15.25	8.45	3.91			20.35	10.54	13.32	13.32
		2W voice unbundled TN Area Plus with Caller ID-res (AC7)			UEPRX	UEPAH	2.70	22.14	15.25	8.45	3.91			20.35	10.54	13.32	13.32
		2W voice unbundled TN Area Calling port with Caller ID-res (F2R)			UEPRX	UEPAK	2.70	22.14	15.25	8.45	3.91			20.35	10.54	13.32	13.32
		2W voice unbundled TN Area Calling port with Caller ID-res (TACER)			UEPRX	UEPAL	2.70	22.14	15.25	8.45	3.91			20.35	10.54	13.32	13.32
		2W voice unbundled TN Area Calling port with Caller ID-res (TACSR)			UEPRX	UEPAM	2.70	22.14	15.25	8.45	3.91			20.35	10.54	13.32	13.32
		2W voice unbundled TN Area Calling port with Caller ID-res (1MF2X)			UEPRX	UEPAN	2.70	22.14	15.25	8.45	3.91			20.35	10.54	13.32	13.32
		2W voice unbundled TN Area Calling port with Caller ID-res (2MR)			UEPRX	UEPAO	2.70	22.14	15.25	8.45	3.91			20.35	10.54	13.32	13.32
		2W voice unbundles res, low usage line port with Caller ID (LUM)			UEPRX	UEPAP	2.70	22.14	15.25	8.45	3.91			20.35	10.54	13.32	13.32
		2W Voice Unbundled TN Residence Dialing Plan w/o Caller ID			UEPRX	UEPWN	2.70	22.14	15.25	8.45	3.91			20.35	10.54	13.32	13.32
		2W voice unbundled TN Area Plus Port w/o Caller ID Capability			UEPRX	UEPRR	2.70	22.14	15.25	8.45	3.91			20.35	10.54	13.32	13.32
		2W voice unbundled Low Usage Line Port w/o Caller ID Capability			UEPRX	UEPRT	2.70	22.14	15.25	8.45	3.91			20.35	10.54	13.32	13.32
	FEATURES																
		All Features Offered			UEPRX	UEPVF	0.00	0.00	0.00								

UNBUNDLED NETWORK ELEMENTS - Tennessee														Attachment: 2 Exh A			
CATEGORY		RATE ELEMENTS	Interim	Zone	BCS	USOC	RATES($)					Svc Order Submitted Elec per LSR	Svc Order Submitted Manually per LSR	Incremental Charge - Manual Svc Order vs. Electronic-1st	Incremental Charge - Manual Svc Order vs. Electronic-Add'l	Incremental Charge - Manual Svc Order vs. Electronic-Disc 1st	Incremental Charge - Manual Svc Order vs. Electronic-Disc Add'l
								Nonrecurring		NRC Disconnect				OSS Rates($)			
							Rec	First	Add'l	First	Add'l	SOMEC	SOMAN	SOMAN	SOMAN	SOMAN	SOMAN
	NONRECURRING CHARGES (NRCs) - CURRENTLY COMBINED																
		2W VG Loop/Line Port Combination-Conversion-Switch-as-is			UEPRX	USAC2		1.03	0.29								
		2W VG Loop/Line Port Combination -Conversion-Switch with change			UEPRX	USACC		1.03	0.29								
		2W VG Loop/Line Port Combination -Conversion-Subsequent Database Update						0.76									
		2W VG Loop/Line Port Platform-Installation Charge at QuickService location-Not Conversion of Existing Service			UEPRX	URECC		1.03									
	ADDITIONAL NRCs																
		2W VG Loop/Line Port Combination-Subsequent Activity			UEPRX	USAS2	0.00	0.00	0.00								
		Unbundled Misc Rate Element, Tag Loop at End User Premise			UEPRX	URETL		8.33	0.83					20.35	10.54	13.32	13.32
	OFF/ON PREMISES EXTENSION CHANNELS																
		2W Analog VG Extension Loop – Non-Design		1	UEPRX	UEAEN	13.19	31.99	20.02	10.65	1.41			20.35	10.54	13.32	13.32
		2W Analog VG Extension Loop – Non-Design		2	UEPRX	UEAEN	17.23	31.99	20.02	10.65	1.41			20.35	10.54	13.32	13.32
		2W Analog VG Extension Loop – Non-Design		3	UEPRX	UEAEN	22.53	31.99	20.02	10.65	1.41			20.35	10.54	13.32	13.32
		2W Analog VG Extension Loop – Design		1	UEPRX	UEAED	16.56	75.06	48.20	28.70	17.64			20.35	10.54	13.32	13.32
		2W Analog VG Extension Loop – Design		2	UEPRX	UEAED	21.63	75.06	48.20	28.70	17.64			20.35	10.54	13.32	13.32
		2W Analog VG Extension Loop – Design		3	UEPRX	UEAED	28.28	75.06	48.20	28.70	17.64			20.35	10.54	13.32	13.32
	INTEROFFICE TRANSPORT																
		Interoffice Transport-Dedicated-2W VG-Facility Termination			UEPRX	U1TV2	18.58	55.39	17.37	27.96	3.51						
		Interoffice Transport-Dedicated-2W VG-Per Mile or Fraction Mile			UEPRX	U1TVM	0.0174	0.00	0.00								
	2-WIRE VOICE GRADE LOOP WITH 2-WIRE LINE PORT (BUS)																
	UNE Port/Loop Combination Rates																
		2W VG Loop/Port Combo-Zone 1					15.18										
		2W VG Loop/Port Combo-Zone 2					19.01										
		2W VG Loop/Port Combo-Zone 3					24.02										
	UNE Loop Rates																
		2W VG Loop (SL1)-Zone 1		1	UEPBX	UEPLX	12.48										
		2W VG Loop (SL1)-Zone 2		2	UEPBX	UEPLX	16.31										
		2W VG Loop (SL1)-Zone 3		3	UEPBX	UEPLX	21.32										
	2-Wire Voice Grade Line Port (Bus)																
		2W voice unbundled port w/o Caller ID-bus			UEPBX	UEPBL	2.70	22.14	15.25	8.45	3.91			20.35	10.54	13.32	13.32
		2W voice unbundled port with Caller + E484 ID-bus			UEPBX	UEPBC	2.70	22.14	15.25	8.45	3.91			20.35	10.54	13.32	13.32
		2W voice unbundled port outgoing only-bus			UEPBX	UEPBO	2.70	22.14	15.25	8.45	3.91			20.35	10.54	13.32	13.32
		2W VG unbundled TN extended local dialing parity port with Caller ID-bus			UEPBX	UEPAV	2.70	22.14	15.25	8.45	3.91			20.35	10.54	13.32	13.32
		2W voice unbundled incoming only port with Caller ID-Bus			UEPBX	UEPB1	2.70	22.14	15.25	8.45	3.91			20.35	10.54	13.32	13.32
		2W voice unbundled TN Bus 2-Way Area Calling Port Economy Option (TACC1)			UEPBX	UEPAC	2.70	22.14	15.25	8.45	3.91			20.35	10.54	13.32	13.32
		2W voice unbundled TN Bus 2-Way Area Calling Port Standard Option (TACC2)			UEPBX	UEPAD	2.70	22.14	15.25	8.45	3.91			20.35	10.54	13.32	13.32
		2W voice unbundled TN Bus 2-Way Collierville and Memphis Local Calling Port (B2F)			UEPBX	UEPAE	2.70	22.14	15.25	8.45	3.91			20.35	10.54	13.32	13.32
		2W Voice Unbundled TN Business Dialing Plan w/o Caller ID			UEPBX	UEPWO	2.70	22.14	15.25	8.45	3.91			20.35	10.54	13.32	13.32
		TN Inward Collierville and Memphis Local Calling Plan (BUS)			UEPBX	UEPB2	2.70	22.14	15.25	8.45	3.91			20.35	10.54	13.32	13.32
		TN 2-Way Collierville and Memphis Local Calling Plan (BUS)			UEPBX	UEPB3	2.70	22.14	15.25	8.45	3.91			20.35	10.54	13.32	13.32
		2W voice unbundled Incoming Only Port w/o Caller ID Capability			UEPBX	UEPBE	2.70	22.14	15.25	8.45	3.91			20.35	10.54	13.32	13.32
	FEATURES																
		All Features Offered			UEPBX	UEPVF	0.00	0.00	0.00								
	NONRECURRING CHARGES (NRCs) - CURRENTLY COMBINED																
		2W VG Loop/Line Port Combination-Conversion-Switch-as-is			UEPBX	USAC2		1.03	0.29								
		2W VG Loop/Line Port Combination -Conversion-Switch with change			UEPBX	USACC		1.03	0.29								
		2W VG Loop/Line Port Combination -Conversion-Subsequent Database Update						0.76									
	ADDITIONAL NRCs																
		2W VG Loop/Line Port Combination-Subsequent Activity			UEPBX	USAS2	0.00	0.00	0.00								
		Unbundled Misc Rate Element, Tag Loop at End User Premise			UEPBX	URETL		8.33	0.83								
	OFF/ON PREMISES EXTENSION CHANNELS																
		2W Analog VG Extension Loop – Non-Design		1	UEPBX	UEAEN	13.19	31.99	20.02	10.65	1.41			20.35	10.54	13.32	13.32
		2W Analog VG Extension Loop – Non-Design		2	UEPBX	UEAEN	17.23	31.99	20.02	10.65	1.41			20.35	10.54	13.32	13.32

CATEGORY	RATE ELEMENTS	Interim	Zone	BCS	USOC	RATES($)					Svc Order Submitted Elec per LSR	Svc Order Submitted Manually per LSR	Incremental Charge - Manual Svc Order vs. Electronic-1st	Incremental Charge - Manual Svc Order vs. Electronic-Add'l	Incremental Charge - Manual Svc Order vs. Electronic-Disc 1st	Incremental Charge - Manual Svc Order vs. Electronic-Disc Add'l
							Nonrecurring		NRC Disconnect		OSS Rates($)					
						Rec	First	Add'l	First	Add'l	SOMEC	SOMAN	SOMAN	SOMAN	SOMAN	SOMAN
	2W Analog VG Extension Loop – Non-Design		3	UEPBX	UEAEN	22.53	31.99	20.02	10.65	1.41			20.35	10.54	13.32	13.32
	2W Analog VG Extension Loop – Design		1	UEPBX	UEAED	16.56	75.06	48.20	28.70	17.64			20.35	10.54	13.32	13.32
	2W Analog VG Extension Loop – Design		2	UEPBX	UEAED	21.63	75.06	48.20	28.70	17.64			20.35	10.54	13.32	13.32
	2W Analog VG Extension Loop – Design		3	UEPBX	UEAED	28.28	75.06	48.20	28.70	17.64			20.35	10.54	13.32	13.32
INTEROFFICE TRANSPORT																
	Interoffice Transport-Dedicated-2W VG-Facility Termination			UEPBX	U1TV2	18.58	55.39	17.37	27.96	3.51						
	Interoffice Transport-Dedicated-2W VG-Per Mile or Fraction Mile			UEPBX	U1TVM	0.0174	0.00	0.00								
2-WIRE VOICE GRADE LOOP WITH 2-WIRE LINE PORT (RES - PBX)																
UNE Port/Loop Combination Rates																
	2W VG Loop/Port Combo-Zone 1					15.18										
	2W VG Loop/Port Combo-Zone 2					19.01										
	2W VG Loop/Port Combo-Zone 3					24.02										
UNE Loop Rates																
	2W VG Loop (SL 1)-Zone 1		1	UEPRG	UEPLX	12.48										
	2W VG Loop (SL 1)-Zone 2		2	UEPRG	UEPLX	16.31										
	2W VG Loop (SL 1)-Zone 3		3	UEPRG	UEPLX	21.32										
2-Wire Voice Grade Line Port Rates (RES - PBX)																
	2W VG Unbundled Combination 2-Way PBX Trunk Port-Res			UEPRG	UEPRD	2.70	22.14	15.25	8.45	3.91			20.35	10.54	13.32	13.32
FEATURES																
	All Features Offered			UEPRG	UEPVF	0.00	0.00	0.00								
NONRECURRING CHARGES (NRCs) - CURRENTLY COMBINED																
	2W VG Loop/ Line Port Combination (PBX)-Conversion-Switch-As-Is			UEPRG	USAC2		1.03	0.29								
	2W VG Loop/ Line Port Combination (PBX)-Conversion-Switch with Change			UEPRG	USACC		1.03	0.29								
	2W VG Loop/Line Port Combination -Conversion-Subsequent Database Update						0.76									
ADDITIONAL NRCs																
	2W VG Loop/ Line Port Combination (PBX)-Subsequent Activity			UEPRG	USAS2	0.00	0.00	0.00								
	PBX Subsequent Activity-Change/Rearrange Multiline Hunt Group						14.64	14.64								
	Unbundled Misc Rate Element, Tag Loop at End User Premise			UEPRG	URETL		8.33	0.83								
OFF/ON PREMISES EXTENSION CHANNELS																
	Local Channel VG, per termination		1	UEPRG	P2JHX	16.56	75.06	48.20	28.70	17.64			20.35	10.54	13.32	13.32
	Local Channel VG, per termination		2	UEPRG	P2JHX	21.63	75.06	48.20	28.70	17.64			20.35	10.54	13.32	13.32
	Local Channel VG, per termination		3	UEPRG	P2JHX	28.28	75.06	48.20	28.70	17.64			20.35	10.54	13.32	13.32
	Non-Wire Direct Serve Channel VG		SW	UEPRG	SDD2X	10.02	148.84	112.34	73.14	36.65			20.35	10.54	13.32	13.32
INTEROFFICE TRANSPORT																
	Interoffice Transport-Dedicated-2W VG-Facility Termination			UEPRG	U1TV2	18.58	55.39	17.37	27.96	3.51						
	Interoffice Transport-Dedicated-2W VG-Per Mile or Fraction Mile			UEPRG	U1TVM	0.0174	0.00	0.00								
2-WIRE VOICE GRADE LOOP WITH 2-WIRE LINE PORT (BUS - PBX)																
UNE Port/Loop Combination Rates																
	2W VG Loop/Port Combo-Zone 1					15.18										
	2W VG Loop/Port Combo-Zone 2					19.01										
	2W VG Loop/Port Combo-Zone 3					24.02										
UNE Loop Rates																
	2W VG Loop (SL 1)-Zone 1		1	UEPPX	UEPLX	12.48										
	2W VG Loop (SL 1)-Zone 2		2	UEPPX	UEPLX	16.31										
	2W VG Loop (SL 1)-Zone 3		3	UEPPX	UEPLX	21.32										
2-Wire Voice Grade Line Port Rates (BUS - PBX)																
	Line Side Unbundled Combination 2-Way PBX Trunk Port-Bus			UEPPX	UEPPC	2.70	22.14	15.25	8.45	3.91			20.35	10.54	13.32	13.32
	Line Side Unbundled Outward PBX Trunk Port-Bus			UEPPX	UEPPO	2.70	22.14	15.25	8.45	3.91			20.35	10.54	13.32	13.32
	Line Side Unbundled Incoming PBX Trunk Port-Bus			UEPPX	UEPP1	2.70	22.14	15.25	8.45	3.91			20.35	10.54	13.32	13.32
	2W Voice Unbundled PBX LD Terminal Ports			UEPPX	UEPLD	2.70	22.14	15.25	8.45	3.91			20.35	10.54	13.32	13.32
	2W Voice Unbundled 2-Way Combination PBX TN Calling Port			UEPPX	UEPT2	2.70	22.14	15.25	8.45	3.91			20.35	10.54	13.32	13.32
	2W Voice Unbundled 1-Way Outgoing PBX TN Calling Port			UEPPX	UEPTO	2.70	22.14	15.25	8.45	3.91			20.35	10.54	13.32	13.32
	2W Voice Unbundled 2-Way Combination PBX Usage Port			UEPPX	UEPXA	2.70	22.14	15.25	8.45	3.91			20.35	10.54	13.32	13.32
	2W Voice Unbundled PBX Toll Terminal Hotel Ports			UEPPX	UEPXB	2.70	22.14	15.25	8.45	3.91			20.35	10.54	13.32	13.32
	2W Voice Unbundled PBX LD DDD Terminals Port			UEPPX	UEPXC	2.70	22.14	15.25	8.45	3.91			20.35	10.54	13.32	13.32
	2W Voice Unbundled PBX LD Terminal Switchboard Port			UEPPX	UEPXD	2.70	22.14	15.25	8.45	3.91			20.35	10.54	13.32	13.32

CATEGORY	RATE ELEMENTS	Interim	Zone	BCS	USOC	RATES($)					Svc Order Submitted Elec per LSR	Svc Order Submitted Manually per LSR	Incremental Charge - Manual Svc Order vs. Electronic-1st	Incremental Charge - Manual Svc Order vs. Electronic-Add'l	Incremental Charge - Manual Svc Order vs. Electronic-Disc 1st	Incremental Charge - Manual Svc Order vs. Electronic-Disc Add'l
							Nonrecurring		NRC Disconnect		OSS Rates($)					
						Rec	First	Add'l	First	Add'l	SOMEC	SOMAN	SOMAN	SOMAN	SOMAN	SOMAN
	2W Voice Unbundled PBX LD Terminal Switchboard IDD Capable Port			UEPPX	UEPXE	2.70	22.14	15.25	8.45	3.91			20.35	10.54	13.32	13.32
	2W Voice Unbundled 2-Way PBX Hotel/Hospital Economy Administrative Calling Port			UEPPX	UEPXL	2.70	22.14	15.25	8.45	3.91			20.35	10.54	13.32	13.32
	2W Voice Unbundled 2-Way PBX Hotel/Hospital Economy Rm Calling Port			UEPPX	UEPXM	2.70	22.14	15.25	8.45	3.91			20.35	10.54	13.32	13.32
	2W Voice Unbundled 1W Out PBX Hotel/Hospital Economy Administrative Calling Port TN Calling Port			UEPPX	UEPXN	2.70	22.14	15.25	8.45	3.91			20.35	10.54	13.32	13.32
	2W Voice Unbundled 1-Way Outgoing PBX Hotel/Hospital Discount Rm Calling Port			UEPPX	UEPXO	2.70	22.14	15.25	8.45	3.91			20.35	10.54	13.32	13.32
	2W Voice Unbundled 1-Way Outgoing PBX Measured Port			UEPPX	UEPXS	2.70	22.14	15.25	8.45	3.91			20.35	10.54	13.32	13.32
	2W Voice Unbundled PBX Collierville and Memphis Calling Port			UEPPX	UEPXU	2.70	22.14	15.25	8.45	3.91			20.35	10.54	13.32	13.32
	2W Voice Unbundled 2-Way PBX TN RegionServ Callling Port			UEPPX	UEPXV	2.70	22.14	15.25	8.45	3.91			20.35	10.54	13.32	13.32
	TN PBX 2-Way Combo Each Additional Trunk Collierville and Memphis Local Calling Plan			UEPPX	UEPA6	2.70	22.14	15.25	8.45	3.91			20.35	10.54	13.32	13.32
	TN PBX 2-Way Combo First Trunk Collierville and Memphis Local Calling Plan			UEPPX	UEPA7	2.70	22.14	15.25	8.45	3.91			20.35	10.54	13.32	13.32
FEATURES																
	All Features Offered			UEPPX	UEPVF	0.00	0.00	0.00								
NONRECURRING CHARGES (NRCs) - CURRENTLY COMBINED																
	2W VG Loop/ Line Port Combination (PBX)-Conversion-Switch-As-Is			UEPPX	USAC2		1.03	0.29								
	2W VG Loop/ Line Port Combination (PBX)-Conversion-Switch with Change			UEPPX	USACC		1.03	0.29								
	2W VG Loop/Line Port Combination -Conversion-Subsequent Database Update						0.76									
ADDITIONAL NRCs																
	2W VG Loop/ Line Port Combination (PBX)-Subsequent Activity			UEPPX	USAS2	0.00	0.00	0.00								
	PBX Subsequent Activity-Change/Rearrange Multiline Hunt Group						14.64	14.64								
	Unbundled Misc Rate Element, Tag Loop at End User Premise			UEPPX	URETL		8.33	0.83					20.35	10.54	13.32	13.32
OFF/ON PREMISES EXTENSION CHANNELS																
	Local Channel VG, per termination		1	UEPPX	P2JHX	16.56	75.06	48.20	28.70	17.64			20.35	10.54	13.32	13.32
	Local Channel VG, per termination		2	UEPPX	P2JHX	21.63	75.06	48.20	28.70	17.64			20.35	10.54	13.32	13.32
	Local Channel VG, per termination		3	UEPPX	P2JHX	28.28	75.06	48.20	28.70	17.64			20.35	10.54	13.32	13.32
	Non-Wire Direct Serve Channel VG		SW	UEPPX	SDD2X	10.02	148.84	112.34	73.14	36.65			20.35	10.54	13.32	13.32
INTEROFFICE TRANSPORT																
	Interoffice Transport-Dedicated-2W VG-Facility Termination			UEPPX	U1TV2	18.58	55.39	17.37	27.96	3.51						
	Interoffice Transport-Dedicated-2W VG-Per Mile or Fraction Mile			UEPPX	U1TVM	0.0174	0.00	0.00								
2-WIRE VOICE GRADE LOOP WITH 2-WIRE LINE PORT (COIN)																
UNE Port/Loop Combination Rates																
	2W VG Coin Port/Loop Combo – Zone 1					15.18										
	2W VG Coin Port/Loop Combo – Zone 2					19.01										
	2W VG Coin Port/Loop Combo – Zone 3					24.02										
UNE Loop Rates																
	2W VG Loop (SL1)-Zone 1		1	UEPCO	UEPLX	12.48										
	2W VG Loop (SL1)-Zone 2		2	UEPCO	UEPLX	16.31										
	2W VG Loop (SL1)-Zone 3		3	UEPCO	UEPLX	21.32										
2-Wire Voice Grade Line Ports (COIN)																
	2W Coin 2-Way w/o Operator Screening and w/o Blocking (TN)			UEPCO	UEPTB	2.70	22.14	15.25	8.45	3.91			20.35	10.54	13.32	13.32
	2W Coin 2-Way with Operator Screening and Blocking: 011, 900/976, 1+DDD (NC, TN)			UEPCO	UEPRP	2.70	22.14	15.25	8.45	3.91			20.35	10.54	13.32	13.32
	2W Coin 2-Way with Operator Screening and 011 Blocking (TN)			UEPCO	UEPTA	2.70	22.14	15.25	8.45	3.91			20.35	10.54	13.32	13.32
	2W Coin 2-Way with Operator Screening: 900 Blocking: 900/976, 1+DDD, 011+, and Local (NC, TN)			UEPCO	UEPCA	2.70	22.14	15.25	8.45	3.91			20.35	10.54	13.32	13.32
	2W Coin Outward with Operator Screening and 011 Blocking (TN)			UEPCO	UEPTC	2.70	22.14	15.25	8.45	3.91			20.35	10.54	13.32	13.32
	2W Coin Outward with Operator Screening and Blocking: 900/976, 1+DDD, 011+, and Local (TN)			UEPCO	UEPOT	2.70	22.14	15.25	8.45	3.91			20.35	10.54	13.32	13.32
	2W 2-Way Smartline with 900/976 (all states except LA)			UEPCO	UEPCK	2.88							20.35	10.54	13.32	13.32
	2W Coin Outward Smartline with 900/976 (all states except LA)			UEPCO	UEPCR	2.88							20.35	10.54	13.32	13.32
ADDITIONAL UNE COIN PORT/LOOP (RC)																

UNBUNDLED NETWORK ELEMENTS - Tennessee														Attachment: 2 Exh A			
CATEGORY		RATE ELEMENTS	Interim	Zone	BCS	USOC	RATES($)					Svc Order Submitted Elec per LSR	Svc Order Submitted Manually per LSR	Incremental Charge - Manual Svc Order vs. Electronic-1st	Incremental Charge - Manual Svc Order vs. Electronic-Add'l	Incremental Charge - Manual Svc Order vs. Electronic-Disc 1st	Incremental Charge - Manual Svc Order vs. Electronic-Disc Add'l
								Nonrecurring		NRC Disconnect		OSS Rates($)					
							Rec	First	Add'l	First	Add'l	SOMEC	SOMAN	SOMAN	SOMAN	SOMAN	SOMAN
		UNE Coin Port/Loop Combo Usage (Flat Rate)			UEPCO	URECU	3.45	0.00	0.00	0.00	0.00						
		2W VG Loop/Line Port Combination -Conversion-Switch-as-is			UEPCO	USAC2		1.03	0.29								
		2W VG Loop/Line Port Combination -Conversion-Switch with change			UEPCO	USACC		1.03	0.29								
		2W VG Loop/Line Port Combination-Subsequent Activity			UEPCO	USAS2	0.00	0.00	0.00								
		Unbundled Misc Rate Element, Tag Loop at End User Premise			UEPCO	URETL		8.33	0.83								
	2-WIRE VOICE LOOP/ 2WIRE VOICE GRADE IO TRANSPORT/ 2-WIRE LINE PORT (RES)																
	UNE Port/Loop Combination Rates																
		2W VG Loop/IO Tranport/Port Combo-Zone 1					19.45										
		2W VG Loop/IO Tranport/Port Combo-Zone 2					24.52										
		2W VG Loop/IO Tranport/Port Combo-Zone 3					31.17										
	UNE Loop Rates																
		2W VG Loop (SL2)-Zone 1		1	UEPFR	UECF2	16.56										
		2W VG Loop (SL2)-Zone 2		2	UEPFR	UECF2	21.63										
		2W VG Loop (SL2)-Zone 3		3	UEPFR	UECF2	28.28										
	2-Wire Voice Grade Line Port Rates (Res)																
		2W voice unbundled port-residence			UEPFR	UEPRL	2.89	84.99	57.39	32.36	20.56			20.35	10.54	13.32	13.32
		2W voice unbundled port with Caller ID-res			UEPFR	UEPRC	2.89	84.99	57.39	32.36	20.56			20.35	10.54	13.32	13.32
		2W voice unbundled port outgoing only-res			UEPFR	UEPRO	2.89	84.99	57.39	32.36	20.56			20.35	10.54	13.32	13.32
		2W VG unbundled TN extended local dialing parity port with Caller ID-res			UEPFR	UEPAQ	2.89	84.99	57.39	32.36	20.56			20.35	10.54	13.32	13.32
		2W voice unbundled TN Area Plus with Caller ID-res (AC7)			UEPFR	UEPAH	2.89	84.99	57.39	32.36	20.56			20.35	10.54	13.32	13.32
		2W voice unbundled TN Area Calling port with Caller ID-res (F2R)			UEPFR	UEPAK	2.89	84.99	57.39	32.36	20.56			20.35	10.54	13.32	13.32
		2W voice unbundled TN Area Calling port with Caller ID-res (TACER)			UEPFR	UEPAL	2.89	84.99	57.39	32.36	20.56			20.35	10.54	13.32	13.32
		2W voice unbundled TN Area Calling port with Caller ID-res (TACSR)			UEPFR	UEPAM	2.89	84.99	57.39	32.36	20.56			20.35	10.54	13.32	13.32
		2W voice unbundled TN Area Calling port with Caller ID-res (1MF2X)			UEPFR	UEPAN	2.89	84.99	57.39	32.36	20.56			20.35	10.54	13.32	13.32
		2W voice unbundled TN Area Calling port with Caller ID-res (2MR)			UEPFR	UEPAO	2.89	84.99	57.39	32.36	20.56			20.35	10.54	13.32	13.32
		2W voice unbundles res, low usage line port with Caller ID (LUM)			UEPFR	UEPAP	2.89	84.99	57.39	32.36	20.56			20.35	10.54	13.32	13.32
		2W Voice Unbundled TN Residence Dialing Plan w/o Caller ID			UEPFR	UEPWN	2.89	84.99	57.39	32.36	20.56			20.35	10.54	13.32	13.32
	INTEROFFICE TRANSPORT																
		Interoffice Transport-Dedicated-2W VG-Facility Termination			UEPFR	U1TV2	18.58	55.39	17.37	27.96	3.51						
		Interoffice Transport-Dedicated-2W VG-Per Mile or Fraction Mile			UEPFR	1L5XX	0.0174										
	FEATURES																
		All Features Offered			UEPFR	UEPVF	0.00	0.00	0.00								
	NONRECURRING CHARGES (NRCs) - CURRENTLY COMBINED																
		2W Loop/Dedicated IO Transport/2W Line Port Combination-Conversion-Switch-as-is			UEPFR	USAC2		16.94	3.72								
		2W Loop/Dedicated IO Transport/2W Line Port Combination-Conversion-Switch-With-Change			UEPFR	USACC		16.94	3.72								
		Unbundled Misc Rate Element, Tag Designed Loop at End User Premise			UEPFR	URETN		11.23	1.10								
	2-WIRE VOICE LOOP/ 2WIRE VOICE GRADE IO TRANSPORT/ 2-WIRE LINE PORT (BUS)																
	UNE Port/Loop Combination Rates																
		2W VG Loop/IO Tranport/Port Combo-Zone 1					19.45										
		2W VG Loop/IO Tranport/Port Combo-Zone 2					24.52										
		2W VG Loop/IO Tranport/Port Combo-Zone 3					31.17										
	UNE Loop Rates																
		2W VG Loop (SL2)-Zone 1		1	UEPFB	UECF2	16.56										
		2W VG Loop (SL2)-Zone 2		2	UEPFB	UECF2	21.63										
		2W VG Loop (SL2)-Zone 3		3	UEPFB	UECF2	28.28										
	2-Wire Voice Grade Line Port (Bus)																
		2W voice unbundled port w/o Caller ID-bus			UEPFB	UEPBL	2.89	84.99	57.39	32.36	20.56			20.35	10.54	13.32	13.32
		2W voice unbundled port with Caller + E484 ID-bus			UEPFB	UEPBC	2.89	84.99	57.39	32.36	20.56			20.35	10.54	13.32	13.32
		2W voice unbundled port outgoing only-bus			UEPFB	UEPBO	2.89	84.99	57.39	32.36	20.56			20.35	10.54	13.32	13.32
		2W VG unbundled TN extended local dialing parity port with Caller ID-bus			UEPFB	UEPAV	2.89	84.99	57.39	32.36	20.56			20.35	10.54	13.32	13.32
		2W voice unbundled incoming only port with Caller ID-Bus			UEPFB	UEPB1	2.89	84.99	57.39	32.36	20.56			20.35	10.54	13.32	13.32
		2W voice unbundled TN Bus 2-Way Area Calling Port Economy Option (TACC1)			UEPFB	UEPAC	2.89	84.99	57.39	32.36	20.56			20.35	10.54	13.32	13.32

CATEGORY	RATE ELEMENTS	Interim	Zone	BCS	USOC	RATES($)					Svc Order Submitted Elec per LSR	Svc Order Submitted Manually per LSR	Incremental Charge - Manual Svc Order vs. Electronic-1st	Incremental Charge - Manual Svc Order vs. Electronic-Add'l	Incremental Charge - Manual Svc Order vs. Electronic-Disc 1st	Incremental Charge - Manual Svc Order vs. Electronic-Disc Add'l
							Nonrecurring		NRC Disconnect		OSS Rates($)					
						Rec	First	Add'l	First	Add'l	SOMEC	SOMAN	SOMAN	SOMAN	SOMAN	SOMAN
	2W voice unbundled TN Bus 2-Way Area Calling Port Standard Option (TACC2)			UEPFB	UEPAD	2.89	84.99	57.39	32.36	20.56			20.35	10.54	13.32	13.32
	2W voice unbundled TN Bus 2-Way Collierville and Memphis Local Calling Port (B2F)			UEPFB	UEPAE	2.89	84.99	57.39	32.36	20.56			20.35	10.54	13.32	13.32
	2W Voice Unbundled TN Business Dialing Plan w/o Caller ID			UEPFB	UEPWO	2.89	84.99	57.39	32.36	20.56			20.35	10.54	13.32	13.32
	TN Inward Collierville and Memphis Local Calling Plan (BUS)			UEPFB	UEPB2	2.89	84.99	57.39	32.36	20.56			20.35	10.54	13.32	13.32
	TN 2-Way Collierville and Memphis Local Calling Plan (BUS)			UEPFB	UEPB3	2.89	84.99	57.39	32.36	20.56			20.35	10.54	13.32	13.32
	INTEROFFICE TRANSPORT															
	Interoffice Transport-Dedicated-2W VG-Facility Termination			UEPFB	U1TV2	18.58	55.39	17.37	27.96	3.51						
	Interoffice Transport-Dedicated-2W VG-Per Mile or Fraction Mile			UEPFB	1L5XX	0.0174										
	FEATURES															
	All Features Offered			UEPFB	UEPVF	0.00	0.00	0.00								
	NONRECURRING CHARGES (NRCs) - CURRENTLY COMBINED															
	2W Loop/Dedicated IO Transport/2W Line Port Combination-Conversion-Switch-as-is			UEPFB	USAC2		16.94	3.72								
	2W Loop/Dedicated IO Transport/2W Line Port Combination-Conversion-Switch with change			UEPFB	USACC		16.94	3.72								
	Unbundled Misc Rate Element, Tag Designed Loop at End User Premise			UEPFB	URETN		11.23	1.10								
	2-WIRE VOICE LOOP/ 2WIRE VOICE GRADE IO TRANSPORT/ 2-WIRE LINE PORT (PBX)															
	UNE Port/Loop Combination Rates															
	2W VG Loop/IO Tranport/Port Combo-Zone 1					19.45										
	2W VG Loop/IO Tranport/Port Combo-Zone 2					24.52										
	2W VG Loop/IO Tranport/Port Combo-Zone 3					31.17										
	UNE Loop Rates															
	2W VG Loop (SL2)-Zone 1		1	UEPFP	UECF2	16.56										
	2W VG Loop (SL2)-Zone 2		2	UEPFP	UECF2	21.63										
	2W VG Loop (SL2)-Zone 3		3	UEPFP	UECF2	28.28										
	2-Wire Voice Grade Line Port Rates (BUS - PBX)															
	Line Side Unbundled Combination 2-Way PBX Trunk Port-Bus			UEPFP	UEPPC	2.79	106.40	63.08	42.67	18.54			20.35	10.54	13.32	13.32
	Line Side Unbundled Outward PBX Trunk Port-Bus			UEPFP	UEPPO	2.79	106.40	63.08	42.67	18.54			20.35	10.54	13.32	13.32
	Line Side Unbundled Incoming PBX Trunk Port-Bus			UEPFP	UEPP1	2.79	106.40	63.08	42.67	18.54			20.35	10.54	13.32	13.32
	2W Voice Unbundled PBX LD Terminal Ports			UEPFP	UEPLD	2.79	106.40	63.08	42.67	18.54			20.35	10.54	13.32	13.32
	2W Voice Unbundled 2-Way Combination PBX TN Calling Port			UEPFP	UEPT2	2.79	106.40	63.08	42.67	18.54			20.35	10.54	13.32	13.32
	2W Voice Unbundled 1-Way Outgoing PBX TN Calling Port			UEPFP	UEPTO	2.79	106.40	63.08	42.67	18.54			20.35	10.54	13.32	13.32
	2W Voice Unbundled 2-Way Combination PBX Usage Port			UEPFP	UEPXA	2.79	106.40	63.08	42.67	18.54			20.35	10.54	13.32	13.32
	2W Voice Unbundled PBX Toll Terminal Hotel Ports			UEPFP	UEPXB	2.79	106.40	63.08	42.67	18.54			20.35	10.54	13.32	13.32
	2W Voice Unbundled PBX LD DDD Terminals Port			UEPFP	UEPXC	2.79	106.40	63.08	42.67	18.54			20.35	10.54	13.32	13.32
	2W Voice Unbundled PBX LD Terminal Switchboard Port			UEPFP	UEPXD	2.79	106.40	63.08	42.67	18.54			20.35	10.54	13.32	13.32
	2W Voice Unbundled PBX LD Terminal Switchboard IDD Capable Port			UEPFP	UEPXE	2.79	106.40	63.08	42.67	18.54			20.35	10.54	13.32	13.32
	2W Voice Unbundled 2-Way PBX Hotel/Hospital Economy Administrative Calling Port			UEPFP	UEPXL	2.79	106.40	63.08	42.67	18.54			20.35	10.54	13.32	13.32
	2W Voice Unbundled 2-Way PBX Hotel/Hospital Economy Rm Calling Port			UEPFP	UEPXM	2.79	106.40	63.08	42.67	18.54			20.35	10.54	13.32	13.32
	2W Voice Unbundled 1W Out PBX Hotel/Hospital Economy Administrative Calling Port TN Calling Port			UEPFP	UEPXN	2.79	106.40	63.08	42.67	18.54			20.35	10.54	13.32	13.32
	2W Voice Unbundled 1-Way Outgoing PBX Hotel/Hospital Discount Rm Calling Port			UEPFP	UEPXO	2.79	106.40	63.08	42.67	18.54			20.35	10.54	13.32	13.32
	2W Voice Unbundled 1-Way Outgoing PBX Measured Port			UEPFP	UEPXS	2.79	106.40	63.08	42.67	18.54			20.35	10.54	13.32	13.32
	2W Voice Unbundled PBX Collierville and Memphis Calling Port			UEPFP	UEPXU	2.79	106.40	63.08	42.67	18.54			20.35	10.54	13.32	13.32
	2W Voice Unbundled 2-Way PBX TN RegionServ Callling Port			UEPFP	UEPXV	2.79	106.40	63.08	42.67	18.54			20.35	10.54	13.32	13.32
	INTEROFFICE TRANSPORT															
	Interoffice Transport-Dedicated-2W VG-Facility Termination			UEPFP	U1TV2	18.58	55.39	17.37	27.96	3.51						
	Interoffice Transport-Dedicated-2W VG-Per Mile or Fraction Mile			UEPFP	1L5XX	0.0174										
	FEATURES															
	All Features Offered			UEPFP	UEPVF	0.00	0.00	0.00								
	NONRECURRING CHARGES (NRCs) - CURRENTLY COMBINED															

CATEGORY	RATE ELEMENTS	Interim	Zone	BCS	USOC	RATES($) Rec	Nonrecurring First	Nonrecurring Add'l	NRC Disconnect First	NRC Disconnect Add'l	Svc Order Submitted Elec per LSR	Svc Order Submitted Manually per LSR	Incremental Charge - Manual Svc Order vs. Electronic-1st	Incremental Charge - Manual Svc Order vs. Electronic-Add'l	Incremental Charge - Manual Svc Order vs. Electronic-Disc 1st	Incremental Charge - Manual Svc Order vs. Electronic-Disc Add'l
											OSS Rates($)					
											SOMEC	SOMAN	SOMAN	SOMAN	SOMAN	SOMAN
	2W Loop/Dedicated IO Transport/2W Line Port Combination-Conversion-Switch-as-is			UEPFP	USAC2		16.94	3.72								
	2W Loop/Dedicated IO Transport/2W Line Port Combination-Conversion-Switch with change			UEPFP	USACC		16.94	3.72								
	Unbundled Misc Rate Element, Tag Designed Loop at End User Premise			UEPFP	URETN		11.23	1.10								
2-WIRE VOICE GRADE LOOP- BUS ONLY - WITH 2-WIRE DID TRUNK PORT																
UNE Port/Loop Combination Rates																
	2W VG Loop/2W DID Trunk Port Combo-UNE Zone 1					19.38										
	2W VG Loop/2W DID Trunk Port Combo-UNE Zone 2					20.87										
	2W VG Loop/2W DID Trunk Port Combo-UNE Zone 3					25.78										
UNE Loop Rates																
	2W Analog VG Loop- (SL2)-UNE Zone 1		1	UEPPX	UECD1	9.60										
	2W Analog VG Loop- (SL2)-UNE Zone 2		2	UEPPX	UECD1	11.09										
	2W Analog VG Loop- (SL2)-UNE Zone 3		3	UEPPX	UECD1	16.00										
UNE Port Rate																
	Exchange Ports-2W DID Port			UEPPX	UEPD1	9.78	45.44	29.94	8.45	3.91			30.89	7.03		
NONRECURRING CHARGES - CURRENTLY COMBINED																
	2W VG Loop/2W DID Trunk Port Combination -Switch-as-is			UEPPX	USAC1		8.76	5.75								
	2W VG Loop/2W DID Trunk Port Conversion with BellSouth Allowable Changes			UEPPX	USA1C		8.76	5.75								
	Unbundled Misc Rate Element, Tag Designed Loop at End User Premise			UEPPX	URETN		11.23	1.10								
Telephone Number/Trunk Group Establisment Charges																
	DID Trunk Termination (One Per Port)			UEPPX	NDT	0.00	0.00	0.00								
	Additional DID Numbers for each Group of 20 DID Numbers			UEPPX	ND4	0.00	0.00	0.00								
	DID Numbers, Non- consecutive DID Numbers , Per Number			UEPPX	ND5	0.00	0.00	0.00								
	Reserve Non-Consecutive DID numbers			UEPPX	ND6	0.00	0.00	0.00								
	Reserve DID Numbers			UEPPX	NDV	0.00	0.00	0.00								
2-WIRE ISDN DIGITAL GRADE LOOP WITH 2-WIRE ISDN DIGITAL LINE SIDE PORT																
UNE Port/Loop Combination Rates																
	2W ISDN Digital Grade Loop/2W ISDN Digital Line Side Port -UNE Zone 1					33.27										
	2W ISDN Digital Grade Loop/2W ISDN Digital Line Side Port -UNE Zone 2					35.78										
	2W ISDN Digital Grade Loop/2W ISDN Digital Line Side Port -UNE Zone 3					45.32										
UNE Loop Rates																
	2W ISDN Digital Grade Loop-UNE Zone 1		1	UEPPB UEPPR	USL2X	16.20										
	2W ISDN Digital Grade Loop-UNE Zone 2		2	UEPPB UEPPR	USL2X	18.71										
	2W ISDN Digital Grade Loop-UNE Zone 3		3	UEPPB UEPPR	USL2X	28.25										
UNE Port Rate																
	Exchange Port-2W ISDN Line Side Port			UEPPR	UEPPR	17.07	141.75	118.37	49.20	43.26			19.99	19.99		
	Exchange Port-2W ISDN Line Side Port			UEPPB	UEPPB	17.07	141.75	118.37	49.20	43.26			19.99	19.99		
NONRECURRING CHARGES - CURRENTLY COMBINED																
	2W ISDN Digital Grade Loop/2W ISDN Line Side Port Combination-Conversion			UEPPB UEPPR	USACB	0.00	117.23	117.23					19.99	19.99		
ADDITIONAL NRCs																
	2W ISDN Loop/2W ISDN Port Combination-Sub Actvy-Non Feature/Add Trunk			UEPPB UEPPR	USASB		212.88						19.99	19.99		
	Unbundled Misc Rate Element, Tag Designed Loop at End User Premise			UEPPB UEPPR	URETN		11.23	1.10								
	Unbundled Misc Rate Element, Tag Loop at End User Premise			UEPPB UEPPR	URETL		8.33	0.83								
B-CHANNEL USER PROFILE ACCESS:																
	CVS/CSD (DMS/5ESS)			UEPPB UEPPR	U1UCA	0.00	0.00	0.00								
	CVS (EWSD)			UEPPB UEPPR	U1UCB	0.00	0.00	0.00								
	CSD			UEPPB UEPPR	U1UCC	0.00	0.00	0.00								
B-CHANNEL AREA PLUS USER PROFILE ACCESS: (AL,KY,LA,MS SC,MS, & TN)																

CATEGORY	RATE ELEMENTS	Interim	Zone	BCS	USOC	RATES($) Rec	Nonrecurring First	Nonrecurring Add'l	NRC Disconnect First	NRC Disconnect Add'l	Svc Order Submitted Electronically per LSR	Svc Order Submitted Manually per LSR	Incremental Charge - Manual Svc Order vs. Electronic-1st	Incremental Charge - Manual Svc Order vs. Electronic-Add'l	Incremental Charge - Manual Svc Order vs. Electronic-Disc 1st	Incremental Charge - Manual Svc Order vs. Electronic-Disc Add'l
											OSS Rates($)					
											SOMEC	SOMAN	SOMAN	SOMAN	SOMAN	SOMAN
	CVS/CSD (DMS/5ESS)			UEPPB UEPPR	U1UCD	0.00	0.00	0.00								
	CVS (EWSD)			UEPPB UEPPR	U1UCE	0.00	0.00	0.00								
	CSD			UEPPB UEPPR	U1UCF	0.00	0.00	0.00								
USER TERMINAL PROFILE																
	User Terminal Profile (EWSD only)			UEPPB UEPPR	U1UMA	0.00	0.00	0.00								
VERTICAL FEATURES																
	All Vertical Features-One per Channel B User Profile			UEPPB UEPPR	UEPVF	0.00	0.00	0.00								
INTEROFFICE CHANNEL MILEAGE																
	Interoffice Channel mileage each, including first mile and facilities termination			UEPPB UEPPR	M1GNC	17.91	53.99	17.37					19.99	19.99		
	Interoffice Channel mileage each, additional mile			UEPPB UEPPR	M1GNM	0.173	0.00	0.00								
UNBUNDLED CENTREX PORT/LOOP COMBINATIONS - COST BASED RATES																
UNE-P CENTREX - 1AESS - (Valid in AL,FL,GA,KY,LA,MS,&TN only)																
2-Wire VG Loop/2-Wire Voice Grade Port (Centrex) Combo																
UNE Port/Loop Combination Rates (Non-Design)																
	2W VG Loop/2W VG Port (Centrex) Port Combo-Non-Design					15.18										
	2W VG Loop/2W VG Port (Centrex)Port Combo-Non-Design					19.01										
	2W VG Loop/2W VG Port (Centrex)Port Combo-Non-Design					24.02										
UNE Port/Loop Combination Rates (Design)																
	2W VG Loop/2W VG Port (Centrex) Port Combo-Design					19.26										
	2W VG Loop/2W VG Port (Centrex)Port Combo-Design					24.33										
	2W VG Loop/2W VG Port (Centrex)Port Combo-Design					30.98										
UNE Loop Rate																
	2W VG Loop (SL 1)-Zone 1		1	UEP91	UECS1	12.48										
	2W VG Loop (SL 1)-Zone 2		2	UEP91	UECS1	16.31										
	2W VG Loop (SL 1)-Zone 3		3	UEP91	UECS1	21.32										
	2W VG Loop (SL 2)-Zone 1		1	UEP91	UECS2	16.56										
	2W VG Loop (SL 2)-Zone 2		2	UEP91	UECS2	21.63										
	2W VG Loop (SL 2)-Zone 3		3	UEP91	UECS2	28.28										
UNE Ports																
All States (Except North Carolina and Sout Carolina)																
	2W VG Port (Centrex) Basic Local Area			UEP91	UEPYA	2.70	22.14	15.25	8.45	3.91			30.89	7.03		
	2W VG Port (Centrex 800 termination)Basic Local Area			UEP91	UEPYB	2.70	22.14	15.25	8.45	3.91			30.89	7.03		
	2W VG Port (Centrex with Caller ID)Note1 Basic Local Area			UEP91	UEPYH	2.70	22.14	15.25	8.45	3.91			30.89	7.03		
	2W VG Port (Centrex from diff SWC) Note 2, 3 Basic Local Area			UEP91	UEPYM	2.70	22.14	15.25	8.45	3.91			30.89	7.03		
	2W VG Port, Diff SWC-800 Service Term-Basic Local Area			UEP91	UEPYZ	2.70	22.14	15.25	8.45	3.91			30.89	7.03		
	2W VG Port terminated in on Megalink or equivalent-Basic Local Area			UEP91	UEPY9	2.70	22.14	15.25	8.45	3.91			30.89	7.03		
	2W VG Port Terminated on 800 Service Term-Basic Local Area			UEP91	UEPY2	2.70	22.14	15.25	8.45	3.91			30.89	7.03		
AL, KY, LA, MS, & TN Only																
	2W VG Port (Centrex)			UEP91	UEPQA	2.70	22.14	15.25	8.45	3.91			30.89	7.03		
	2W VG Port (Centrex 800 termination)			UEP91	UEPQB	2.70	22.14	15.25	8.45	3.91			30.89	7.03		
	2W VG Port (Centrex with Caller ID)1			UEP91	UEPQH	2.70	22.14	15.25	8.45	3.91			30.89	7.03		
	2W VG Port (Centrex from diff SWC)2,3			UEP91	UEPQM	2.70	22.14	15.25	8.45	3.91			30.89	7.03		
	2W VG Port, Diff SWC-2,3-800 Service Term			UEP91	UEPQZ	2.70	22.14	15.25	8.45	3.91			30.89	7.03		
	2W VG Port terminated in on Megalink or equivalent			UEP91	UEPQ9	2.70	22.14	15.25	8.45	3.91			30.89	7.03		
	2W VG Port Terminated on 800 Service Term			UEP91	UEPQ2	2.70	22.14	15.25	8.45	3.91			30.89	7.03		
Local Switching																
	Centrex Intercom Funtionality, per port			UEP91	URECS	0.6381										
Features																
	All Standard Features Offered, per port			UEP91	UEPVF	0.00							30.89	7.03		
	All Select Features Offered, per port			UEP91	UEPVS	0.00	433.78						30.89	7.03		
	All Centrex Control Features Offered, per port			UEP91	UEPVC	0.00							30.89	7.03		
NARS																
	Unbundled Network Access Register-Combination			UEP91	UARCX	0.00	0.00	0.00	0.00	0.00			30.89	7.03		
	Unbundled Network Access Register-Indial			UEP91	UAR1X	0.00	0.00	0.00	0.00	0.00			30.89	7.03		
	Unbundled Network Access Register-Outdial			UEP91	UAROX	0.00	0.00	0.00	0.00	0.00			30.89	7.03		
Misc Terminations																
2-Wire Trunk Side																

CATEGORY	RATE ELEMENTS	Interim	Zone	BCS	USOC	RATES($)					Svc Order Submitted Elec per LSR	Svc Order Submitted Manually per LSR	Incremental Charge - Manual Svc Order vs. Electronic-1st	Incremental Charge - Manual Svc Order vs. Electronic-Add'l	Incremental Charge - Manual Svc Order vs. Electronic-Disc 1st	Incremental Charge - Manual Svc Order vs. Electronic-Disc Add'l
							Nonrecurring		NRC Disconnect		OSS Rates($)					
						Rec	First	Add'l	First	Add'l	SOMEC	SOMAN	SOMAN	SOMAN	SOMAN	SOMAN
	Trunk Side Terminations, each			UEP91	CENA6	8.78	22.14	15.25	8.45	3.91			30.89	7.03		
Interoffice Channel Mileage - 2-Wire																
	Interoffice Channel Facilities Termination-VG			UEP91	M1GBC	18.58	22.14	15.25	8.45	3.91			30.89	7.03		
	Interoffice Channel mileage, per mile or fraction of mile			UEP91	M1GBM	0.0174										
Feature Activations (DS0) Centrex Loops on Channelized DS1 Service																
D4 Channel Bank Feature Activations																
	Feature Activation on D-4 Channel Bank Centrex Loop Slot			UEP91	1PQWS	0.66										
	Feature Activation on D-4 Channel Bank FX line Side Loop Slot			UEP91	1PQW6	0.66										
	Feature Activation on D-4 Channel Bank FX Trunk Side Loop Slot			UEP91	1PQW7	0.66										
	Feature Activation on D-4 Channel Bank Centrex Loop Slot-Different WC			UEP91	1PQWP	0.66										
	Feature Activation on D-4 Channel Bank Private Line Loop Slot			UEP91	1PQWV	0.66										
	Feature Activation on D-4 Channel Bank Tjie Line/Trunk Loop Slot			UEP91	1PQWQ	0.66										
	Feature Activation on D-4 Channel Bank WATS Loop Slot			UEP91	1PQWA	0.66										
Non-Recurring Charges (NRC) Associated with UNE-P Centrex																
	Conversion-Currently Combined Switch-As-Is with allowed changes, per port			UEP91	USAC2		1.03	0.29					30.89	7.03		
	New Centrex Standard Common Block			UEP91	M1ACS	0.00	658.60						30.89	7.03		
	New Centrex Customized Common Block			UEP91	M1ACC	0.00	658.60						30.89	7.03		
	Secondary Block, per Block			UEP91	M2CC1	0.00	73.55						30.89	7.03		
	NAR Establishment Charge, Per Occasion			UEP91	URECA		68.57						30.89	7.03		
Additional Non-Recurring Charges (NRC)																
	Unbundled Misc Rate Element, Tag Loop at End Use Premise			UEP91	URETL		8.33	0.83								
	Unbundled Misc Rate Element, Tag Design Loop at End Use Premise			UEP91	URETN		11.23	1.10								
UNE-P CENTREX - 5ESS (Valid in All States)																
2-Wire VG Loop/2-Wire Voice Grade Port (Centrex) Combo																
UNE Port/Loop Combination Rates (Non-Design)																
	2W VG Loop/2W VG Port (Centrex) Port Combo-Non-Design					15.18										
	2W VG Loop/2W VG Port (Centrex)Port Combo-Non-Design					19.01										
	2W VG Loop/2W VG Port (Centrex)Port Combo-Non-Design					24.02										
UNE Port/Loop Combination Rates (Design)																
	2W VG Loop/2W VG Port (Centrex) Port Combo-Design					19.26										
	2W VG Loop/2W VG Port (Centrex)Port Combo-Design					24.33										
	2W VG Loop/2W VG Port (Centrex)Port Combo-Design					30.98										
UNE Loop Rate																
	2W VG Loop (SL 1)-Zone 1		1	UEP95	UECS1	12.48										
	2W VG Loop (SL 1)-Zone 2		2	UEP95	UECS1	16.31										
	2W VG Loop (SL 1)-Zone 3		3	UEP95	UECS1	21.32										
	2W VG Loop (SL 2)-Zone 1		1	UEP95	UECS2	16.56										
	2W VG Loop (SL 2)-Zone 2		2	UEP95	UECS2	21.63										
	2W VG Loop (SL 2)-Zone 3		3	UEP95	UECS2	28.28										
UNE Port Rate																
All States																
	2W VG Port (Centrex) Basic Local Area			UEP95	UEPYA	2.70	22.14	15.25	8.45	3.91			30.89	7.03		
	2W VG Port (Centrex 800 termination)			UEP95	UEPYB	2.70	22.14	15.25	8.45	3.91			30.89	7.03		
	2W VG Port (Centrex with Caller ID)1Basic Local Area			UEP95	UEPYH	2.70	22.14	15.25	8.45	3.91			30.89	7.03		
	2W VG Port (Centrex from diff SWC)2,3 Basic Local Area			UEP95	UEPYM	2.70	22.14	15.25	8.45	3.91			30.89	7.03		
	2W VG Port, Diff SWC 2,3-800 Service Term-Basic Local Area			UEP95	UEPYZ	2.70	22.14	15.25	8.45	3.91			30.89	7.03		
	2W VG Port terminated in on Megalink or equivalent-Basic Local Area			UEP95	UEPY9	2.70	22.14	15.25	8.45	3.91			30.89	7.03		
	2W VG Port Terminated on 800 Service Term-Basic Local Area			UEP95	UEPY2	2.70	22.14	15.25	8.45	3.91			30.89	7.03		
AL, KY, LA, MS, SC, & TN Only																
	2W VG Port (Centrex)			UEP95	UEPQA	2.70	22.14	15.25	8.45	3.91			30.89	7.03		
	2W VG Port (Centrex 800 termination)			UEP95	UEPQB	2.70	22.14	15.25	8.45	3.91			30.89	7.03		
	2W VG Port (Centrex with Caller ID)1			UEP95	UEPQH	2.70	22.14	15.25	8.45	3.91			30.89	7.03		
	2W VG Port (Centrex from diff SWC)2,3			UEP95	UEPQM	2.70	22.14	15.25	8.45	3.91			30.89	7.03		
	2W VG Port, Diff SWC-800 Service Term 2,3			UEP95	UEPQZ	2.70	22.14	15.25	8.45	3.91			30.89	7.03		
	2W VG Port terminated in on Megalink or equivalent			UEP95	UEPQ9	2.70	22.14	15.25	8.45	3.91			30.89	7.03		

UNBUNDLED NETWORK ELEMENTS - Tennessee														Attachment: 2 Exh A			
CATEGORY	RATE ELEMENTS	Interim	Zone	BCS	USOC	RATES($)					Svc Order Submitted Elec per LSR	Svc Order Submitted Manually per LSR	Incremental Charge - Manual Svc Order vs. Electronic-1st	Incremental Charge - Manual Svc Order vs. Electronic-Add'l	Incremental Charge - Manual Svc Order vs. Electronic-Disc 1st	Incremental Charge - Manual Svc Order vs. Electronic-Disc Add'l
							Nonrecurring		NRC Disconnect				OSS Rates($)			
						Rec	First	Add'l	First	Add'l	SOMEC	SOMAN	SOMAN	SOMAN	SOMAN	SOMAN
	2W VG Port Terminated on 800 Service Term			UEP95	UEPQ2	2.70	22.14	15.25	8.45	3.91			30.89	7.03		
FL & GA Only																
Local Switching																
	Centrex Intercom Funtionality, per port			UEP95	URECS	0.6381										
Features																
	All Standard Features Offered, per port			UEP95	UEPVF	0.00										
	All Select Features Offered, per port			UEP95	UEPVS	0.00	433.78									
	All Centrex Control Features Offered, per port			UEP95	UEPVC	0.00										
NARS																
	Unbundled Network Access Register-Combination			UEP95	UARCX	0.00	0.00	0.00	0.00	0.00						
	Unbundled Network Access Register-Indial			UEP95	UAR1X	0.00	0.00	0.00	0.00	0.00						
	Unbundled Network Access Register-Outdial			UEP95	UAROX	0.00	0.00	0.00	0.00	0.00						
Misc Terminations																
2-Wire Trunk Side																
	Trunk Side Terminations, each			UEP95	CEND6	8.78	47.75	47.01	9.21	8.47			30.89	7.03		
4-Wire Digital (1.544 Megabits)																
	DS1 Circuit Terminations, each			UEP95	M1HD1	35.55	75.93	38.15					30.89	7.03		
	DS0 Channels Activated, each			UEP95	M1HDO	0.00	108.67						30.89	7.03		
Interoffice Channel Mileage - 2-Wire																
	Interoffice Channel Facilities Termination			UEP95	M1GBC	18.58	22.14	15.25	8.45	3.91			30.89	7.03		
	Interoffice Channel mileage, per mile or fraction of mile			UEP95	M1GBM	0.0174										
Feature Activations (DS0) Centrex Loops on Channelized DS1 Service																
D4 Channel Bank Feature Activations																
	Feature Activation on D-4 Channel Bank Centrex Loop Slot			UEP95	1PQWS	0.66										
	Feature Activation on D-4 Channel Bank FX line Side Loop Slot			UEP95	1PQW6	0.66										
	Feature Activation on D-4 Channel Bank FX Trunk Side Loop Slot			UEP95	1PQW7	0.66										
	Feature Activation on D-4 Channel Bank Centrex Loop Slot-Different WC			UEP95	1PQWP	0.66										
	Feature Activation on D-4 Channel Bank Private Line Loop Slot			UEP95	1PQWV	0.66										
	Feature Activation on D-4 Channel Bank Tjie Line/Trunk Loop Slot			UEP95	1PQWQ	0.66										
	Feature Activation on D-4 Channel Bank WATS Loop Slot			UEP95	1PQWA	0.66										
Non-Recurring Charges (NRC) Associated with UNE-P Centrex																
	NRC Conversion Currently Combined Switch-As-Is with allowed changes, per port			UEP95	USAC2		1.03	0.29					30.89	7.03		
	New Centrex Standard Common Block			UEP95	M1ACS	0.00	658.60						30.89	7.03		
	New Centrex Customized Common Block			UEP95	M1ACC	0.00	658.60						30.89	7.03		
	NAR Establishment Charge, Per Occasion			UEP95	URECA	0.00	68.57						30.89	7.03		
Additional Non-Recurring Charges (NRC)																
	Unbundled Misc Rate Element, Tag Loop at End Use Premise			UEP95	URETL		8.33	0.83								
	Unbundled Misc Rate Element, Tag Design Loop at End Use Premise			UEP95	URETN		11.23	1.10								
UNE-P CENTREX - DMS100 (Valid in All States)																
2-Wire VG Loop/2-Wire Voice Grade Port (Centrex) Combo																
UNE Port/Loop Combination Rates (Non-Design)																
	2W VG Loop/2W VG Port (Centrex) Port Combo-Non-Design					15.18										
	2W VG Loop/2W VG Port (Centrex)Port Combo-Non-Design					19.01										
	2W VG Loop/2W VG Port (Centrex)Port Combo-Non-Design					24.02										
UNE Port/Loop Combination Rates (Design)																
	2W VG Loop/2W VG Port (Centrex) Port Combo-Design					19.26										
	2W VG Loop/2W VG Port (Centrex)Port Combo-Design					24.33										
	2W VG Loop/2W VG Port (Centrex)Port Combo-Design					30.98										
UNE Loop Rate																
	2W VG Loop (SL 1)-Zone 1		1	UEP9D	UECS1	12.48										
	2W VG Loop (SL 1)-Zone 2		2	UEP9D	UECS1	16.31										
	2W VG Loop (SL 1)-Zone 3		3	UEP9D	UECS1	21.32										
	2W VG Loop (SL 2)-Zone 1		1	UEP9D	UECS2	16.56										
	2W VG Loop (SL 2)-Zone 2		2	UEP9D	UECS2	21.63										
	2W VG Loop (SL 2)-Zone 3		3	UEP9D	UECS2	28.28										
UNE Port Rate																

CATEGORY	RATE ELEMENTS	Interim	Zone	BCS	USOC	RATES($)					Svc Order Submitted Elec per LSR	Svc Order Submitted Manually per LSR	Incremental Charge - Manual Svc Order vs. Electronic-1st	Incremental Charge - Manual Svc Order vs. Electronic-Add'l	Incremental Charge - Manual Svc Order vs. Electronic-Disc 1st	Incremental Charge - Manual Svc Order vs. Electronic-Disc Add'l
							Nonrecurring		NRC Disconnect		OSS Rates($)					
						Rec	First	Add'l	First	Add'l	SOMEC	SOMAN	SOMAN	SOMAN	SOMAN	SOMAN
ALL STATES																
	2W VG Port (Centrex) Basic Local Area			UEP9D	UEPYA	2.70	22.14	15.25	8.45	3.91			30.89	7.03		
	2W VG Port (Centrex 800 termination)Basic Local Area			UEP9D	UEPYB	2.70	22.14	15.25	8.45	3.91			30.89	7.03		
	2W VG Port (Centrex/EBS-PSET)3Basic Local Area			UEP9D	UEPYC	2.70	22.14	15.25	8.45	3.91			30.89	7.03		
	2W VG Port (Centrex /EBS-M5009)3Basic Local Area			UEP9D	UEPYD	2.70	22.14	15.25	8.45	3.91			30.89	7.03		
	2W VG Port (Centrex /EBS-M5209))3 Basic Local Area			UEP9D	UEPYE	2.70	22.14	15.25	8.45	3.91			30.89	7.03		
	2W VG Port (Centrex /EBS-M5112))3 Basic Local Area			UEP9D	UEPYF	2.70	22.14	15.25	8.45	3.91			30.89	7.03		
	2W VG Port (Centrex /EBS-M5312))3Basic Local Area			UEP9D	UEPYG	2.70	22.14	15.25	8.45	3.91			30.89	7.03		
	2W VG Port (Centrex /EBS-M5008))3 Basic Local Area			UEP9D	UEPYT	2.70	22.14	15.25	8.45	3.91			30.89	7.03		
	2W VG Port (Centrex/EBS-M5208))3 Basic Local Area			UEP9D	UEPYU	2.70	22.14	15.25	8.45	3.91			30.89	7.03		
	2W VG Port (Centrex/EBS-M5216))3 Basic Local Area			UEP9D	UEPYV	2.70	22.14	15.25	8.45	3.91			30.89	7.03		
	2W VG Port (Centrex/EBS-M5316))3 Basic Local Area			UEP9D	UEPY3	2.70	22.14	15.25	8.45	3.91			30.89	7.03		
	2W VG Port (Centrex with Caller ID) Basic Local Area			UEP9D	UEPYH	2.70	22.14	15.25	8.45	3.91			30.89	7.03		
	2W VG Port (Centrex/Caller ID/Msg Wtg Lamp Indication))4 Basic Local Area			UEP9D	UEPYW	2.70	22.14	15.25	8.45	3.91			30.89	7.03		
	2W VG Port (Centrex/Msg Wtg Lamp Indication))4 Basic Local Area			UEP9D	UEPYJ	2.70	22.14	15.25	8.45	3.91			30.89	7.03		
	2W VG Port (Centrex from diff SWC) 2,3-Basic Local Area			UEP9D	UEPYM	2.70	22.14	15.25	8.45	3.91			30.89	7.03		
	2W VG Port (Centrex/differ SWC /EBS-PSET)2,3,4 Basic Local Area			UEP9D	UEPYO	2.70	22.14	15.25	8.45	3.91			30.89	7.03		
	2W VG Port (Centrex/differ SWC /EBS-M5009)2,3,4 Basic Local Area			UEP9D	UEPYP	2.70	22.14	15.25	8.45	3.91			30.89	7.03		
	2W VG Port (Centrex/differ SWC /EBS-5209)2,3,4 Basic Local Area			UEP9D	UEPYQ	2.70	22.14	15.25	8.45	3.91			30.89	7.03		
	2W VG Port (Centrex/differ SWC /EBS-M5112)2,3,4 Basic Local Area			UEP9D	UEPYR	2.70	22.14	15.25	8.45	3.91			30.89	7.03		
	2W VG Port (Centrex/differ SWC /EBS-M5312)2,3,4 Basic Local Area			UEP9D	UEPYS	2.70	22.14	15.25	8.45	3.91			30.89	7.03		
	2W VG Port (Centrex/differ SWC /EBS-M5008)2,3,4 Basic Local Area			UEP9D	UEPY4	2.70	22.14	15.25	8.45	3.91			30.89	7.03		
	2W VG Port (Centrex/differ SWC /EBS-M5208)2, 3 Basic Local Area			UEP9D	UEPY5	2.70	22.14	15.25	8.45	3.91			30.89	7.03		
	2W VG Port (Centrex/differ SWC /EBS-M5216)2,3,4 Basic Local Area			UEP9D	UEPY6	2.70	22.14	15.25	8.45	3.91			30.89	7.03		
	2W VG Port (Centrex/differ SWC /EBS-M5316)2,3,4 Basic Local Area			UEP9D	UEPY7	2.70	22.14	15.25	8.45	3.91			30.89	7.03		
	2W VG Port, Diff SWC-800 Service Term 2,3			UEP9D	UEPYZ	2.70	22.14	15.25	8.45	3.91			30.89	7.03		
	2W VG Port terminated in on Megalink or equivalent Basic Local Area			UEP9D	UEPY9	2.70	22.14	15.25	8.45	3.91			30.89	7.03		
	2W VG Port Terminated on 800 Service Term Basic Local Area			UEP9D	UEPY2	2.70	22.14	15.25	8.45	3.91			30.89	7.03		
AL, KY, LA, MS, SC, & TN Only																
	2W VG Port (Centrex)			UEP9D	UEPQA	2.70	22.14	15.25	8.45	3.91			30.89	7.03		
	2W VG Port (Centrex 800 termination)			UEP9D	UEPQB	2.70	22.14	15.25	8.45	3.91			30.89	7.03		
	2W VG Port (Centrex/EBS-PSET)4			UEP9D	UEPQC	2.70	22.14	15.25	8.45	3.91			30.89	7.03		
	2W VG Port (Centrex /EBS-M5009)4			UEP9D	UEPQD	2.70	22.14	15.25	8.45	3.91			30.89	7.03		
	2W VG Port (Centrex /EBS-M5209)4			UEP9D	UEPQE	2.70	22.14	15.25	8.45	3.91			30.89	7.03		
	2W VG Port (Centrex /EBS-M5112)4			UEP9D	UEPQF	2.70	22.14	15.25	8.45	3.91			30.89	7.03		
	2W VG Port (Centrex /EBS-M5312)4			UEP9D	UEPQG	2.70	22.14	15.25	8.45	3.91			30.89	7.03		
	2W VG Port (Centrex /EBS-M5008)4			UEP9D	UEPQT	2.70	22.14	15.25	8.45	3.91			30.89	7.03		
	2W VG Port (Centrex/EBS-M5208)4			UEP9D	UEPQU	2.70	22.14	15.25	8.45	3.91			30.89	7.03		
	2W VG Port (Centrex/EBS-M5216)4			UEP9D	UEPQV	2.70	22.14	15.25	8.45	3.91			30.89	7.03		
	2W VG Port (Centrex/EBS-M5316)4			UEP9D	UEPQ3	2.70	22.14	15.25	8.45	3.91			30.89	7.03		
	2W VG Port (Centrex with Caller ID)			UEP9D	UEPQH	2.70	22.14	15.25	8.45	3.91			30.89	7.03		
	2W VG Port (Centrex/Caller ID/Msg Wtg Lamp Indication)4			UEP9D	UEPQW	2.70	22.14	15.25	8.45	3.91			30.89	7.03		
	2W VG Port (Centrex/Msg Wtg Lamp Indication)4			UEP9D	UEPQJ	2.70	22.14	15.25	8.45	3.91			30.89	7.03		
	2W VG Port (Centrex from diff SWC) 2,3			UEP9D	UEPQM	2.70	22.14	15.25	8.45	3.91			30.89	7.03		
	2W VG Port (Centrex/differ SWC /EBS-PSET)2,3,4			UEP9D	UEPQO	2.70	22.14	15.25	8.45	3.91			30.89	7.03		
	2W VG Port (Centrex/differ SWC /EBS-M5009)2,3,4			UEP9D	UEPQP	2.70	22.14	15.25	8.45	3.91			30.89	7.03		
	2W VG Port (Centrex/differ SWC /EBS-5209)2,3,4			UEP9D	UEPQQ	2.70	22.14	15.25	8.45	3.91			30.89	7.03		
	2W VG Port (Centrex/differ SWC /EBS-M5112)2,3,4			UEP9D	UEPQR	2.70	22.14	15.25	8.45	3.91			30.89	7.03		
	2W VG Port (Centrex/differ SWC /EBS-M5312)2,3,4			UEP9D	UEPQS	2.70	22.14	15.25	8.45	3.91			30.89	7.03		
	2W VG Port (Centrex/differ SWC /EBS-M5008)2,3,4			UEP9D	UEPQ4	2.70	22.14	15.25	8.45	3.91			30.89	7.03		
	2W VG Port (Centrex/differ SWC /EBS-M5208)2,3,4			UEP9D	UEPQ5	2.70	22.14	15.25	8.45	3.91			30.89	7.03		

CATEGORY	RATE ELEMENTS	Interim	Zone	BCS	USOC	RATES($)					Svc Order Submitted Elec per LSR	Svc Order Submitted Manually per LSR	Incremental Charge - Manual Svc Order vs. Electronic-1st	Incremental Charge - Manual Svc Order vs. Electronic-Add'l	Incremental Charge - Manual Svc Order vs. Electronic-Disc 1st	Incremental Charge - Manual Svc Order vs. Electronic-Disc Add'l
							Nonrecurring		NRC Disconnect		OSS Rates($)					
						Rec	First	Add'l	First	Add'l	SOMEC	SOMAN	SOMAN	SOMAN	SOMAN	SOMAN
	2W VG Port (Centrex/differ SWC /EBS-M5216)2,3,4			UEP9D	UEPQ6	2.70	22.14	15.25	8.45	3.91			30.89	7.03		
	2W VG Port (Centrex/differ SWC /EBS-M5316)2,3,4			UEP9D	UEPQ7	2.70	22.14	15.25	8.45	3.91			30.89	7.03		
	2W VG Port, Diff SWC-800 Service Term 2,3			UEP9D	UEPQZ	2.70	22.14	15.25	8.45	3.91			30.89	7.03		
	2W VG Port terminated in on Megalink or equivalent			UEP9D	UEPQ9	2.70	22.14	15.25	8.45	3.91			30.89	7.03		
	2W VG Port Terminated on 800 Service Term			UEP9D	UEPQ2	2.70	22.14	15.25	8.45	3.91			30.89	7.03		
Local Switching																
	Centrex Intercom Funtionality, per port			UEP9D	URECS	0.6381										
Features																
	All Standard Features Offered, per port			UEP9D	UEPVF	0.00										
	All Select Features Offered, per port			UEP9D	UEPVS	0.00	433.78									
	All Centrex Control Features Offered, per port			UEP9D	UEPVC	0.00										
NARS																
	Unbundled Network Access Register-Combination			UEP9D	UARCX	0.00	0.00	0.00	0.00	0.00						
	Unbundled Network Access Register-Inward			UEP9D	UAR1X	0.00	0.00	0.00	0.00	0.00						
	Unbundled Network Access Register-Outdial			UEP9D	UAROX	0.00	0.00	0.00	0.00	0.00						
Misc Terminations																
2-Wire Trunk Side																
	Trunk Side Terminations, each			UEP9D	CEND6	8.78	22.14	15.25	8.45	3.91			30.89	7.03		
4-Wire Digital (1.544 Megabits)																
	DS1 Circuit Terminations, each			UEP9D	M1HD1	35.55	75.93	38.15					30.89	7.03		
	DS0 Channels Activiated per Channel			UEP9D	M1HDO	0.00	108.67						30.89	7.03		
Interoffice Channel Mileage - 2-Wire																
	Interoffice Channel Facilities Termination			UEP9D	M1GBC	18.58	22.14	15.25	8.45	3.91			30.89	7.03		
	Interoffice Channel mileage, per mile or fraction of mile			UEP9D	M1GBM	0.0174										
Feature Activations (DS0) Centrex Loops on Channelized DS1 Service																
D4 Channel Bank Feature Activations																
	Feature Activation on D-4 Channel Bank Centrex Loop Slot			UEP9D	1PQWS	0.66										
	Feature Activation on D-4 Channel Bank FX line Side Loop Slot			UEP9D	1PQW6	0.66										
	Feature Activation on D-4 Channel Bank FX Trunk Side Loop Slot			UEP9D	1PQW7	0.66										
	Feature Activation on D-4 Channel Bank Centrex Loop Slot-Different WC			UEP9D	1PQWP	0.66										
	Feature Activation on D-4 Channel Bank Private Line Loop Slot			UEP9D	1PQWV	0.66										
	Feature Activation on D-4 Channel Bank Tjie Line/Trunk Loop Slot			UEP9D	1PQWQ	0.66										
	Feature Activation on D-4 Channel Bank WATS Loop Slot			UEP9D	1PQWA	0.66										
Non-Recurring Charges (NRC) Associated with UNE-P Centrex																
	NRC Conversion Currently Combined Switch-As-Is with allowed changes, per port			UEP9D	USAC2		1.03	0.29					30.89	7.03		
	New Centrex Standard Common Block			UEP9D	M1ACS	0.00	658.60						30.89	7.03		
	New Centrex Customized Common Block			UEP9D	M1ACC	0.00	658.60						30.89	7.03		
	NAR Establishment Charge, Per Occasion			UEP9D	URECA		68.57						30.89	7.03		
Additional Non-Recurring Charges (NRC)																
	Unbundled Misc Rate Element, Tag Loop at End Use Premise			UEP9D	URETL		8.33	0.83								
	Unbundled Misc Rate Element, Tag Design Loop at End Use Premise			UEP9D	URETN		11.23	1.10								
UNE-P CENTREX - EWSD (Valid in AL, FL, KY, LA, MS & TN)																
2-Wire VG Loop/2-Wire Voice Grade Port (Centrex) Combo																
UNE Port/Loop Combination Rates (Non-Design)																
	2W VG Loop/2W VG Port (Centrex) Port Combo-Non-Design					15.18										
	2W VG Loop/2W VG Port (Centrex)Port Combo-Non-Design					19.01										
	2W VG Loop/2W VG Port (Centrex)Port Combo-Non-Design					24.02										
UNE Port/Loop Combination Rates (Design)																
	2W VG Loop/2W VG Port (Centrex) Port Combo-Design					19.26										
	2W VG Loop/2W VG Port (Centrex)Port Combo-Design					24.33										
	2W VG Loop/2W VG Port (Centrex)Port Combo-Design					30.98										
UNE Loop Rate																
	2W VG Loop (SL 1)-Zone 1		1	UEP9E	UECS1	12.48										
	2W VG Loop (SL 1)-Zone 2		2	UEP9E	UECS1	16.31										
	2W VG Loop (SL 1)-Zone 3		3	UEP9E	UECS1	21.32										
	2W VG Loop (SL 2)-Zone 1		1	UEP9E	UECS2	16.56										

CATEGORY	RATE ELEMENTS	Interim	Zone	BCS	USOC	RATES($)					Svc Order Submitted Elec per LSR	Svc Order Submitted Manually per LSR	Incremental Charge - Manual Svc Order vs. Electronic-1st	Incremental Charge - Manual Svc Order vs. Electronic-Add'l	Incremental Charge - Manual Svc Order vs. Electronic-Disc 1st	Incremental Charge - Manual Svc Order vs. Electronic-Disc Add'l
							Nonrecurring		NRC Disconnect		OSS Rates($)					
						Rec	First	Add'l	First	Add'l	SOMEC	SOMAN	SOMAN	SOMAN	SOMAN	SOMAN
	2W VG Loop (SL 2)-Zone 2		2	UEP9E	UECS2	21.63										
	2W VG Loop (SL 2)-Zone 3		3	UEP9E	UECS2	28.28										
UNE Port Rate																
AL, FL, KY, LA, MS, & TN only																
	2W VG Port (Centrex) Basic Local Area			UEP9E	UEPYA	2.70	22.14	15.25	8.45	3.91			30.89	7.03		
	2W VG Port (Centrex 800 termination)Basic Local Area			UEP9E	UEPYB	2.70	22.14	15.25	8.45	3.91			30.89	7.03		
	2W VG Port (Centrex with Caller ID)1Basic Local Area			UEP9E	UEPYH	2.70	22.14	15.25	8.45	3.91			30.89	7.03		
	2W VG Port (Centrex from diff SWC)2,3 Basic Local Area			UEP9E	UEPYM	2.70	22.14	15.25	8.45	3.91			30.89	7.03		
	2W VG Port, Diff SWC 2,3-800 Service Term-Basic Local Area			UEP9E	UEPYZ	2.70	22.14	15.25	8.45	3.91			30.89	7.03		
	2W VG Port terminated in on Megalink or equivalent-Basic Local Area			UEP9E	UEPY9	2.70	22.14	15.25	8.45	3.91			30.89	7.03		
	2W VG Port Terminated on 800 Service Term-Basic Local Area			UEP9E	UEPY2	2.70	22.14	15.25	8.45	3.91			30.89	7.03		
AL, KY, LA, MS, & TN Only																
	2W VG Port (Centrex)			UEP9E	UEPQA	2.70	22.14	15.25	8.45	3.91			30.89	7.03		
	2W VG Port (Centrex 800 termination)			UEP9E	UEPQB	2.70	22.14	15.25	8.45	3.91			30.89	7.03		
	2W VG Port (Centrex with Caller ID)1			UEP9E	UEPQH	2.70	22.14	15.25	8.45	3.91			30.89	7.03		
	2W VG Port (Centrex from diff SWC)2,3			UEP9E	UEPQM	2.70	22.14	15.25	8.45	3.91			30.89	7.03		
	2W VG Port, Diff SWC 2,3 -800 Service Term			UEP9E	UEPQZ	2.70	22.14	15.25	8.45	3.91			30.89	7.03		
	2W VG Port terminated in on Megalink or equivalent			UEP9E	UEPQ9	2.70	22.14	15.25	8.45	3.91			30.89	7.03		
	2W VG Port Terminated on 800 Service Term			UEP9E	UEPQ2	2.70	22.14	15.25	8.45	3.91			30.89	7.03		
Local Switching																
	Centrex Intercom Funtionality, per port			UEP9E	URECS	0.6381										
Features																
	All Standard Features Offered, per port			UEP9E	UEPVF	0.00							30.89	7.03		
	All Select Features Offered, per port			UEP9E	UEPVS	0.00	433.78						30.89	7.03		
	All Centrex Control Features Offered, per port			UEP9E	UEPVC	0.00							30.89	7.03		
NARS																
	Unbundled Network Access Register-Combination			UEP9E	UARCX	0.00	0.00	0.00	0.00	0.00			30.89	7.03		
	Unbundled Network Access Register-Indial			UEP9E	UAR1X	0.00	0.00	0.00	0.00	0.00			30.89	7.03		
	Unbundled Network Access Register-Outdial			UEP9E	UAROX	0.00	0.00	0.00	0.00	0.00			30.89	7.03		
Misc Terminations																
2-Wire Trunk Side																
	Trunk Side Terminations, each			UEP9E	CEND6	8.78	22.14	15.25	8.45	3.91			30.89	7.03		
4-Wire Digital (1.544 Megabits)																
	DS1 Circuit Terminations, each			UEP9E	M1HD1	35.55	75.93	38.15					30.89	7.03		
	DS0 Channel Activated Per Channel			UEP9E	M1HDO	0.00	108.67						30.89	7.03		
Interoffice Channel Mileage - 2-Wire																
	Interoffice Channel Facilities Termination			UEP9E	M1GBC	18.58	22.14	15.25	8.45	3.91			30.89	7.03		
	Interoffice Channel mileage, per mile or fraction of mile			UEP9E	M1GBM	0.0174										
Feature Activations (DS0) Centrex Loops on Channelized DS1 Service																
D4 Channel Bank Feature Activations																
	Feature Activation on D-4 Channel Bank Centrex Loop Slot			UEP9E	1PQWS	0.66										
	Feature Activation on D-4 Channel Bank FX line Side Loop Slot			UEP9E	1PQW6	0.66										
	Feature Activation on D-4 Channel Bank FX Trunk Side Loop Slot			UEP9E	1PQW7	0.66										
	Feature Activation on D-4 Channel Bank Centrex Loop Slot-Different WC			UEP9E	1PQWP	0.66										
	Feature Activation on D-4 Channel Bank Private Line Loop Slot			UEP9E	1PQWV	0.66										
	Feature Activation on D-4 Channel Bank Tjie Line/Trunk Loop Slot			UEP9E	1PQWQ	0.66										
	Feature Activation on D-4 Channel Bank WATS Loop Slot			UEP9E	1PQWA	0.66										
Non-Recurring Charges (NRC) Associated with UNE-P Centrex																
	NRC Conversion Currently Combined Switch-As-Is with allowed changes, per port			UEP9E	USAC2		1.03	0.29					30.89	7.03		
	New Centrex Standard Common Block			UEP9E	M1ACS	0.00	658.60						30.89	7.03		
	New Centrex Customized Common Block			UEP9E	M1ACC	0.00	658.60						30.89	7.03		
	NAR Establishment Charge, Per Occasion			UEP9E	URECA	0.00	68.57						30.89	7.03		
Additional Non-Recurring Charges (NRC)																
	Unbundled Misc Rate Element, Tag Loop at End Use Premise			UEP9E	URETL		8.33	0.83								
	Unbundled Misc Rate Element, Tag Design Loop at End Use Premise			UEP9E	URETN		11.23	1.10								

UNBUNDLED NETWORK ELEMENTS - Tennessee														Attachment: 2 Exh A			
CATEGORY	RATE ELEMENTS	Interim	Zone	BCS	USOC	RATES($)					Svc Order Submitted Elec per LSR	Svc Order Submitted Manually per LSR	Incremental Charge - Manual Svc Order vs. Electronic-1st	Incremental Charge - Manual Svc Order vs. Electronic-Add'l	Incremental Charge - Manual Svc Order vs. Electronic-Disc 1st	Incremental Charge - Manual Svc Order vs. Electronic-Disc Add'l
							Nonrecurring		NRC Disconnect		OSS Rates($)					
						Rec	First	Add'l	First	Add'l	SOMEC	SOMAN	SOMAN	SOMAN	SOMAN	SOMAN
UNE-P CENTREX - DCO - Valid in AL, KY, LA, MS, & TN)																
2-Wire VG Loop/2-Wire Voice Grade Port (Centrex) Combo																
UNE Port/Loop Combination Rates (Non-Design)																
	2W VG Loop/2W VG Port (Centrex) Port Combo-Non-Design					15.18										
	2W VG Loop/2W VG Port (Centrex)Port Combo-Non-Design					19.01										
	2W VG Loop/2W VG Port (Centrex)Port Combo-Non-Design					24.02										
UNE Port/Loop Combination Rates (Design)																
	2W VG Loop/2W VG Port (Centrex) Port Combo-Design					19.26										
	2W VG Loop/2W VG Port (Centrex)Port Combo-Design					24.33										
	2W VG Loop/2W VG Port (Centrex)Port Combo-Design					30.98										
UNE Loop Rate																
	2W VG Loop (SL 1)-Zone 1		1	UEP93	UECS1	12.48										
	2W VG Loop (SL 1)-Zone 2		2	UEP93	UECS1	16.31										
	2W VG Loop (SL 1)-Zone 3		3	UEP93	UECS1	21.32										
	2W VG Loop (SL 2)-Zone 1		1	UEP93	UECS2	16.56										
	2W VG Loop (SL 2)-Zone 2		2	UEP93	UECS2	21.63										
	2W VG Loop (SL 2)-Zone 3		3	UEP93	UECS2	28.28										
UNE Port Rate																
AL, KY, LA, MS, & TN only																
	2W VG Port (Centrex) Basic Local Area			UEP93	UEPYA	2.70	22.14	15.25	8.45	3.91			30.89	7.03		
	2W VG Port (Centrex 800 termination)Basic Local Area			UEP93	UEPYB	2.70	22.14	15.25	8.45	3.91			30.89	7.03		
	2W VG Port (Centrex with Caller ID)1Basic Local Area			UEP93	UEPYH	2.70	22.14	15.25	8.45	3.91			30.89	7.03		
	2W VG Port (Centrex from diff SWC)2,3 Basic Local Area			UEP93	UEPYM	2.70	22.14	15.25	8.45	3.91			30.89	7.03		
	2W VG Port, Diff SWC-2,3-800 Service Term-Basic Local Area			UEP93	UEPYZ	2.70	22.14	15.25	8.45	3.91			30.89	7.03		
	2W VG Port terminated in on Megalink or equivalent-Basic Local Area			UEP93	UEPY9	2.70	22.14	15.25	8.45	3.91			30.89	7.03		
	2W VG Port Terminated on 800 Service Term-Basic Local Area			UEP93	UEPY2	2.70	22.14	15.25	8.45	3.91			30.89	7.03		
	2W VG Port (Centrex)			UEP93	UEPQA	2.70	22.14	15.25	8.45	3.91			30.89	7.03		
	2W VG Port (Centrex 800 termination)			UEP93	UEPQB	2.70	22.14	15.25	8.45	3.91			30.89	7.03		
	2W VG Port (Centrex with Caller ID)1			UEP93	UEPQH	2.70	22.14	15.25	8.45	3.91			30.89	7.03		
	2W VG Port (Centrex from diff SWC)2,3			UEP93	UEPQM	2.70	22.14	15.25	8.45	3.91			30.89	7.03		
	2W VG Port, Diff SWC-2,3 -800 Service Term			UEP93	UEPQZ	2.70	22.14	15.25	8.45	3.91			30.89	7.03		
	2W VG Port terminated in on Megalink or equivalent			UEP93	UEPQ9	2.70	22.14	15.25	8.45	3.91			30.89	7.03		
	2W VG Port Terminated on 800 Service Term			UEP93	UEPQ2	2.70	22.14	15.25	8.45	3.91			30.89	7.03		
Local Switching																
	Centrex Intercom Funtionality, per port			UEP93	URECS	0.6381										
Features																
	All Standard Features Offered, per port			UEP93	UEPVF	0.00										
	All Centrex Control Features Offered, per port			UEP93	UEPVC	0.00										
NARS																
	Unbundled Network Access Register-Combination			UEP93	UARCX	0.00	0.00	0.00	0.00	0.00						
	Unbundled Network Access Register-Indial			UEP93	UAR1X	0.00	0.00	0.00	0.00	0.00						
	Unbundled Network Access Register-Outdial			UEP93	UAROX	0.00	0.00	0.00	0.00	0.00						
Misc Terminations																
2-Wire Trunk Side																
	Trunk Side Terminations, each			UEP93	CEND6	8.78	22.14	15.25	8.45	3.91			30.89	7.03		
4-Wire Digital (1.544 Megabits)																
	DS1 Circuit Terminations, each			UEP93	M1HD1	35.55	75.93	38.15					30.89	7.03		
	DS0 Channels Activated, Per Channel			UEP93	M1HDO	0.00	108.67						30.89	7.03		
Interoffice Channel Mileage - 2-Wire																
	Interoffice Channel Facilities Termination			UEP93	M1GBC	18.58	22.14	15.25	8.45	3.91			30.89	7.03		
	Interoffice Channel mileage, per mile or fraction of mile			UEP93	M1GBM	0.0174										
Feature Activations (DS0) Centrex Loops on Channelized DS1 Service																
D4 Channel Bank Feature Activations																
	Feature Activation on D-4 Channel Bank Centrex Loop Slot			UEP93	1PQWS	0.66										
	Feature Activation on D-4 Channel Bank FX Line Side Loop Slot			UEP93	1PQW6	0.66										
	Feature Activation on D-4 Channel Bank FX Trunk Side Loop Slot			UEP93	1PQW7	0.66										
	Feature Activation on D-4 Channel Bank Centrex Loop Slot-Different WC			UEP93	1PQWP	0.66										

UNBUNDLED NETWORK ELEMENTS - Tennessee														Attachment: 2 Exh A			
CATEGORY		RATE ELEMENTS	Interim	Zone	BCS	USOC	RATES($)					Svc Order Submitted Elec per LSR	Svc Order Submitted Manually per LSR	Incremental Charge - Manual Svc Order vs. Electronic-1st	Incremental Charge - Manual Svc Order vs. Electronic-Add'l	Incremental Charge - Manual Svc Order vs. Electronic-Disc 1st	Incremental Charge - Manual Svc Order vs. Electronic-Disc Add'l
								Nonrecurring		NRC Disconnect		OSS Rates($)					
							Rec	First	Add'l	First	Add'l	SOMEC	SOMAN	SOMAN	SOMAN	SOMAN	SOMAN
		Feature Activation on D-4 Channel Bank Private Line Loop Slot			UEP93	1PQWV	0.66										
		Feature Activation on D-4 Channel Bank Tie Line/Trunk Loop Slot			UEP93	1PQWQ	0.66										
		Feature Activation on D-4 Channel Bank WATS Loop Slot			UEP93	1PQWA	0.66										
	Non-Recurring Charges (NRC) Associated with UNE-P Centrex																
		NRC Conversion Currently Combined Switch-As-Is with allowed changes, per port			UEP93	USAC2		1.03	0.29					30.89	7.03		
		New Centrex Standard Common Block			UEP93	M1ACS	0.00	658.60						30.89	7.03		
		New Centrex Customized Common Block			UEP93	M1ACC	0.00	658.60						30.89	7.03		
		NAR Establishment Charge, Per Occasion			UEP93	URECA		68.57						30.89	7.03		
	Additional Non-Recurring Charges (NRC)																
		Unbundled Misc Rate Element, Tag Loop at End Use Premise			UEP93	URETL		8.33	0.83								
		Unbundled Misc Rate Element, Tag Design Loop at End Use Premise			UEP93	URETN		11.23	1.10								
	Note 1 - Required Port for Centrex Control in 1AESS, 5ESS & EWSD																
	Note 2 - Requres Interoffice Channel Mileage																
	Note 3 - Installation is combination of Installation charge for SL2 Loop and Port																
	Note 4 - Requires Specific Customer Premises Equipment																
	Note: Rates displaying an "I" in Interim column are interim as a result of a Commission order.																

UNBUNDLED NETWORK ELEMENTS - Alabama

Attachment: 2 Exh. B

CATEGORY	RATE ELEMENTS	Interim	Zone	BCS	USOC	RATES ($)					Svc Order Submitted Elec per LSR	Svc Order Submitted Manually per LSR	Incremental Charge - Manual Svc Order vs. Electronic-1st	Incremental Charge - Manual Svc Order vs. Electronic-Add'l	Incremental Charge - Manual Svc Order vs. Electronic-Disc 1st	Incremental Charge - Manual Svc Order vs. Electronic-Disc Add'l
						Rec	Nonrecurring		NRC Disconnect		OSS Rates ($)					
							First	Add'l	First	Add'l	SOMEC	SOMAN	SOMAN	SOMAN	SOMAN	SOMAN
UNBUNDLED EXCHANGE ACCESS LOOP																
	2-WIRE HIGH BIT RATE DIGITAL SUBSCRIBER LINE (HDSL) COMPATIBLE LOOP															
	2W Unbundled HDSL Loop including manual service inquiry & facility reservation-Zone 1		1	UHL	UHL2X	10.05										
	2W Unbundled HDSL Loop including manual service inquiry & facility reservation-Zone 2		2	UHL	UHL2X	11.70										
	2W Unbundled HDSL Loop including manual service inquiry & facility reservation-Zone 3		3	UHL	UHL2X	13.16										
	2W Unbundled HDSL Loop without manual service inquiry and facility reservation-Zone 1		1	UHL	UHL2W	10.05										
	2W Unbundled HDSL Loop without manual service inquiry and facility reservation-Zone 2		2	UHL	UHL2W	11.70										
	2W Unbundled HDSL Loop without manual service inquiry and facility reservation-Zone 3		3	UHL	UHL2W	13.16										
	4-WIRE HIGH BIT RATE DIGITAL SUBSCRIBER LINE (HDSL) COMPATIBLE LOOP															
	4W Unbundled HDSL Loop including manual service inquiry and facility reservation-Zone 1		1	UHL	UHL4X	16.04										
	4W Unbundled HDSL Loop including manual service inquiry and facility reservation-Zone 2		2	UHL	UHL4X	17.89										
	4W Unbundled HDSL Loop including manual service inquiry and facility reservation-Zone 3		3	UHL	UHL4X	17.54										
	4W Unbundled HDSL Loop without manual service inquiry and facility reservation-Zone 1		1	UHL	UHL4W	16.04										
	4W Unbundled HDSL Loop without manual service inquiry and facility reservation-Zone 2		2	UHL	UHL4W	17.89										
	4W Unbundled HDSL Loop without manual service inquiry and facility reservation-Zone 3		3	UHL	UHL4W	17.54										
	4-WIRE DS1 DIGITAL LOOP															
	4W DS1 Digital Loop-Zone 1		1	USL	USLXX	94.93										
	4W DS1 Digital Loop-Zone 2		2	USL	USLXX	177.31										
	4W DS1 Digital Loop-Zone 3		3	USL	USLXX	361.70										
HIGH CAPACITY UNBUNDLED LOCAL LOOP																
	High Capacity Unbundled Local Loop-DS3-Per Mile per month			UE3	1L5ND	9.64										
	High Capacity Unbundled Local Loop-DS3-Facility Termination per month			UE3	UE3PX	308.98										
	High Capacity Unbundled Local Loop-STS-1-Per Mile per month			UDLSX	1L5ND	9.64										
	High Capacity Unbundled Local Loop-STS-1-Facility Termination per month			UDLSX	UDLS1	367.80										
UNBUNDLED DEDICATED TRANSPORT																
	INTEROFFICE CHANNEL - DEDICATED TRANSPORT															
	Interoffice Channel-Dedicated Channel-DS1-Per Mile per month			U1TD1	1L5XX	0.21										
	Interoffice Channel-Dedicated Tranport-DS1-Facility Termination			U1TD1	U1TF1	69.18										
	Interoffice Channel -Dedicated Transport-DS3-Per Mile per month			U1TD3	1L5XX	4.70										
	Interoffice Channel-Dedicated Transport-DS3-Facility Termination per month			U1TD3	U1TF3	809.05										
	Interoffice Channel-Dedicated Transport-STS-1-Per Mile per month			U1TS1	1L5XX	4.70										
	Interoffice Channel-Dedicated Transport-STS-1-Facility Termination			U1TS1	U1TFS	806.58										
	UNBUNDLED DARK FIBER - Stand Alone or in Combination															
	Dark Fiber-Interoffice Transport, Per 4 Fiber Strands, Per Route Mile Or Fraction Thereof			UDF, UDFCX	1L5DF	25.69										
ENHANCED EXTENDED LINK (EELs)																
	NOTE: The monthly recurring and non-recurring charges below will apply and the Switch-As-Is Charge will not apply for UNE combinations provisioned as ' Ordinarily Combined' Network Elements.															
	NOTE: The monthly recurring and the Switch-As-Is Charge and not the non-recurring charges below will apply for UNE combinations provisioned as ' Currently Combined' Network Elements.															
	EXTENDED 4-WIRE DS1 DIGITAL EXTENDED LOOP WITH DEDICATED DS1 INTEROFFICE TRANSPORT															
	4W DS1 Digital Loop in Combination-Zone 1		1	UNC1X	USLXX	94.93										
	4W DS1 Digital Loop in Combination-Zone 2		2	UNC1X	USLXX	177.31										
	4W DS1 Digital Loop in Combination-Zone 3		3	UNC1X	USLXX	361.70										
	Interoffice Transport-Dedicated-DS1 combination-Per Mile per month			UNC1X	1L5XX	0.21										
	Interoffice Transport-Dedicated-DS1 combination-Facility Termination per month			UNC1X	U1TF1	69.18										
	EXTENDED DS3 DIGITAL EXTENDED LOOP WITH DEDICATED DS3 INTEROFFICE TRANSPORT															
	DS3 Local Loop in combination-per mile per month			UNC3X	1L5ND	9.54										
	DS3 Local Loop in combination-Facility Termination per month			UNC3X	UE3PX	355.33										
	Interoffice Transport-Dedicated-DS3-Per Mile per month			UNC3X	1L5XX	4.70										
	Interoffice Transport-Dedicated-DS3 combination-Facility Termination per month			UNC3X	U1TF3	809.05										
	EXTENDED STS-1 DIGITAL EXTENDED LOOP WITH DEDICATED STS-1 INTEROFFICE TRANSPORT															
	STS-1 Local Loop in combination-per mile per month			UNCSX	1L5ND	9.54										
	STS-1 Local Loop in combination-Facility Termination per month			UNCSX	UDLS1	367.80										
	Interoffice Transport-Dedicated-STS-1 combination-per mile per month			UNCSX	1L5XX	4.70										
	Interoffice Transport-Dedicated-STS-1 combination-Facility Termination per month			UNCSX	U1TFS	806.58										

UNBUNDLED NETWORK ELEMENTS - Florida

Attachment: 2 Exh. B

CATEGORY	RATE ELEMENTS	Interim	Zone	BCS	USOC	RATES ($) Rec	Nonrecurring First	Nonrecurring Add'l	NRC Disconnect First	NRC Disconnect Add'l	Svc Order Submitted Elec per LSR	Svc Order Submitted Manually per LSR	Incremental Charge - Manual Svc Order vs. Electronic-1st	Incremental Charge - Manual Svc Order vs. Electronic-Add'l	Incremental Charge - Manual Svc Order vs. Electronic-Disc 1st	Incremental Charge - Manual Svc Order vs. Electronic-Disc Add'l
											OSS Rates ($)					
							First	Add'l	First	Add'l	SOMEC	SOMAN	SOMAN	SOMAN	SOMAN	SOMAN
UNBUNDLED EXCHANGE ACCESS LOOP																
	2-WIRE HIGH BIT RATE DIGITAL SUBSCRIBER LINE (HDSL) COMPATIBLE LOOP															
	2W Unbundled HDSL Loop including manual service inquiry & facility reservation-Zone 1		1	UHL	UHL2X	8.30										
	2W Unbundled HDSL Loop including manual service inquiry & facility reservation-Zone 2		2	UHL	UHL2X	11.80										
	2W Unbundled HDSL Loop including manual service inquiry & facility reservation-Zone 3		3	UHL	UHL2X	20.94										
	2W Unbundled HDSL Loop without manual service inquiry and facility reservation-Zone 1		1	UHL	UHL2W	8.30										
	2W Unbundled HDSL Loop without manual service inquiry and facility reservation-Zone 2		2	UHL	UHL2W	11.80										
	2W Unbundled HDSL Loop without manual service inquiry and facility reservation-Zone 3		3	UHL	UHL2W	20.94										
	4-WIRE HIGH BIT RATE DIGITAL SUBSCRIBER LINE (HDSL) COMPATIBLE LOOP															
	4W Unbundled HDSL Loop including manual service inquiry and facility reservation-Zone 1		1	UHL	UHL4X	12.49										
	4W Unbundled HDSL Loop including manual service inquiry and facility reservation-Zone 2		2	UHL	UHL4X	17.76										
	4W Unbundled HDSL Loop including manual service inquiry and facility reservation-Zone 3		3	UHL	UHL4X	31.50										
	4W Unbundled HDSL Loop without manual service inquiry and facility reservation-Zone 1		1	UHL	UHL4W	12.49										
	4W Unbundled HDSL Loop without manual service inquiry and facility reservation-Zone 2		2	UHL	UHL4W	17.76										
	4W Unbundled HDSL Loop without manual service inquiry and facility reservation-Zone 3		3	UHL	UHL4W	31.50										
	4-WIRE DS1 DIGITAL LOOP															
	4W DS1 Digital Loop-Zone 1		1	USL	USLXX	81.35										
	4W DS1 Digital Loop-Zone 2		2	USL	USLXX	115.62										
	4W DS1 Digital Loop-Zone 3		3	USL	USLXX	205.15										
HIGH CAPACITY UNBUNDLED LOCAL LOOP																
	High Capacity Unbundled Local Loop-DS3-Per Mile per month			UE3	1L5ND	12.56										
	High Capacity Unbundled Local Loop-DS3-Facility Termination per month			UE3	UE3PX	444.91										
	High Capacity Unbundled Local Loop-STS-1-Per Mile per month			UDLSX	1L5ND	12.56										
	High Capacity Unbundled Local Loop-STS-1-Facility Termination per month			UDLSX	UDLS1	490.59										
UNBUNDLED DEDICATED TRANSPORT																
	INTEROFFICE CHANNEL - DEDICATED TRANSPORT															
	Interoffice Channel-Dedicated Channel-DS1-Per Mile per month			U1TD1	1L5XX	0.21										
	Interoffice Channel-Dedicated Tranport-DS1-Facility Termination			U1TD1	U1TF1	101.71										
	Interoffice Channel -Dedicated Transport-DS3-Per Mile per month			U1TD3	1L5XX	4.45										
	Interoffice Channel-Dedicated Transport-DS3-Facility Termination per month			U1TD3	U1TF3	1231.65										
	Interoffice Channel-Dedicated Transport-STS-1-Per Mile per month			U1TS1	1L5XX	4.45										
	Interoffice Channel-Dedicated Transport-STS-1-Facility Termination			U1TS1	U1TFS	1214.40										
	UNBUNDLED DARK FIBER - Stand Alone or in Combination															
	Dark Fiber-Interoffice Transport, Per Four Fiber Strands, Per Route Mile Or Fraction Thereof			UDF, UDFCX	1L5DF	30.88										
ENHANCED EXTENDED LINK (EELs)																
	NOTE: The monthly recurring and non-recurring charges below will apply and the Switch-As-Is Charge will not apply for UNE combinations provisioned as ' Ordinarily Combined' Network Elements.															
	NOTE: The monthly recurring and the Switch-As-Is Charge and not the non-recurring charges below will apply for UNE combinations provisioned as ' Currently Combined' Network Elements.															
	EXTENDED 4-WIRE DS1 DIGITAL EXTENDED LOOP WITH DEDICATED DS1 INTEROFFICE TRANSPORT															
	4W DS1 Digital Loop in Combination-Zone 1		1	UNC1X	USLXX	81.35										
	4W DS1 Digital Loop in Combination-Zone 2		2	UNC1X	USLXX	115.62										
	4W DS1 Digital Loop in Combination-Zone 3		3	UNC1X	USLXX	205.15										
	Interoffice Transport-Dedicated-DS1 combination-Per Mile per month			UNC1X	1L5XX	0.21										
	Interoffice Transport-Dedicated-DS1 combination-Facility Termination per month			UNC1X	U1TF1	101.71										
	EXTENDED DS3 DIGITAL EXTENDED LOOP WITH DEDICATED DS3 INTEROFFICE TRANSPORT															
	DS3 Local Loop in combination-per mile per month			UNC3X	1L5ND	12.56										
	DS3 Local Loop in combination-Facility Termination per month			UNC3X	UE3PX	444.91										
	Interoffice Transport-Dedicated-DS3-Per Mile per month			UNC3X	1L5XX	4.45										
	Interoffice Transport-Dedicated-DS3 combination-Facility Termination per month			UNC3X	U1TF3	1231.65										
	EXTENDED STS-1 DIGITAL EXTENDED LOOP WITH DEDICATED STS-1 INTEROFFICE TRANSPORT															
	STS-1 Local Loop in combination-per mile per month			UNCSX	1L5ND	12.56										
	STS-1 Local Loop in combination-Facility Termination per month			UNCSX	UDLS1	490.59										
	Interoffice Transport-Dedicated-STS-1 combination-per mile per month			UNCSX	1L5XX	4.45										
	Interoffice Transport-Dedicated-STS-1 combination-Facility Termination per month			UNCSX	U1TFS	1214.40										

UNBUNDLED NETWORK ELEMENTS - Georgia														Attachment: 2 Exh. B			
CATEGORY	RATE ELEMENTS	Interim	Zone	BCS	USOC	RATES ($)					Svc Order Submitted Elec per LSR	Svc Order Submitted Manually per LSR	Incremental Charge - Manual Svc Order vs. Electronic-1st	Incremental Charge - Manual Svc Order vs. Electronic-Add'l	Incremental Charge - Manual Svc Order vs. Electronic-Disc 1st	Incremental Charge - Manual Svc Order vs. Electronic-Disc Add'l
							Nonrecurring		NRC Disconnect		OSS Rates ($)					
						Rec	First	Add'l	First	Add'l	SOMEC	SOMAN	SOMAN	SOMAN	SOMAN	SOMAN
UNBUNDLED EXCHANGE ACCESS LOOP																
2-WIRE HIGH BIT RATE DIGITAL SUBSCRIBER LINE (HDSL) COMPATIBLE LOOP																
	2W Unbundled HDSL Loop including manual service inquiry & facility reservation-Zone 1	I	1	UHL	UHL2X	9.06										
	2W Unbundled HDSL Loop including manual service inquiry & facility reservation-Zone 2	I	2	UHL	UHL2X	10.45										
	2W Unbundled HDSL Loop including manual service inquiry & facility reservation-Zone 3	I	3	UHL	UHL2X	16.65										
	2W Unbundled HDSL Loop without manual service inquiry and facility reservation-Zone 1	I	1	UHL	UHL2W	9.06										
	2W Unbundled HDSL Loop without manual service inquiry and facility reservation-Zone 2	I	2	UHL	UHL2W	10.45										
	2W Unbundled HDSL Loop without manual service inquiry and facility reservation-Zone 3	I	3	UHL	UHL2W	16.65										
4-WIRE HIGH BIT RATE DIGITAL SUBSCRIBER LINE (HDSL) COMPATIBLE LOOP																
	4W Unbundled HDSL Loop including manual service inquiry and facility reservation-Zone 1	I	1	UHL	UHL4X	11.95										
	4W Unbundled HDSL Loop including manual service inquiry and facility reservation-Zone 2	I	2	UHL	UHL4X	13.80										
	4W Unbundled HDSL Loop including manual service inquiry and facility reservation-Zone 3	I	3	UHL	UHL4X	21.93										
	4W Unbundled HDSL Loop without manual service inquiry and facility reservation-Zone 1	I	1	UHL	UHL4W	11.95										
	4W Unbundled HDSL Loop without manual service inquiry and facility reservation-Zone 2	I	2	UHL	UHL4W	13.80										
	4W Unbundled HDSL Loop without manual service inquiry and facility reservation-Zone 3	I	3	UHL	UHL4W	21.93										
4-WIRE DS1 DIGITAL LOOP																
	4W DS1 Digital Loop-Zone 1		1	USL	USLXX	56.82										
	4W DS1 Digital Loop-Zone 2		2	USL	USLXX	60.43										
	4W DS1 Digital Loop-Zone 3		3	USL	USLXX	78.66										
HIGH CAPACITY UNBUNDLED LOCAL LOOP																
	High Capacity Unbundled Local Loop-DS3-Per Mile per month			UE3	1L5ND	13.11										
	High Capacity Unbundled Local Loop-DS3-Facility Termination per month			UE3	UE3PX	297.21										
	High Capacity Unbundled Local Loop-STS-1-Per Mile per month			UDLSX	1L5ND	13.11										
	High Capacity Unbundled Local Loop-STS-1-Facility Termination per month			UDLSX	UDLS1	358.24										
UNBUNDLED DEDICATED TRANSPORT																
INTEROFFICE CHANNEL - DEDICATED TRANSPORT																
	Interoffice Channel-Dedicated Channel-DS1-Per Mile per month			U1TD1	1L5XX	0.1379										
	Interoffice Channel-Dedicated Tranport-DS1-Facility Termination			U1TD1	U1TF1	40.17										
	Interoffice Channel -Dedicated Transport-DS3-Per Mile per month			U1TD3	1L5XX	3.02										
	Interoffice Channel-Dedicated Transport-DS3-Facility Termination per month			U1TD3	U1TF3	401.83										
	Interoffice Channel-Dedicated Transport-STS-1-Per Mile per month			U1TS1	1L5XX	3.02										
	Interoffice Channel-Dedicated Transport-STS-1-Facility Termination			U1TS1	U1TFS	421.39										
UNBUNDLED DARK FIBER																
	Dark Fiber-Interoffice Transport, Per Four Fiber Strands, Per Route Mile Or Fraction Thereof			UDF, UDFCX	1L5DF	26.78										
ENHANCED EXTENDED LINK (EELs)																
NOTE: The monthly recurring and non-recurring charges below will apply and the Switch-As-Is Charge will not apply for UNE combinations provisioned as ' Ordinarily Combined' Network Elements.																
NOTE: The monthly recurring and the Switch-As-Is Charge and not the non-recurring charges below will apply for UNE combinations provisioned as ' Currently Combined' Network Elements.																
EXTENDED 4-WIRE DS1 DIGITAL EXTENDED LOOP WITH DEDICATED DS1 INTEROFFICE TRANSPORT																
	4W DS1 Digital Loop in Combination-Zone 1		1	UNC1X	USLXX	56.82										
	4W DS1 Digital Loop in Combination-Zone 2		2	UNC1X	USLXX	60.43										
	4W DS1 Digital Loop in Combination-Zone 3		3	UNC1X	USLXX	78.66										
	Interoffice Transport-Dedicated-DS1 combination-Per Mile per month			UNC1X	1L5XX	0.1379										
	Interoffice Transport-Dedicated-DS1 combination-Facility Termination per month			UNC1X	U1TF1	40.17										
EXTENDED DS3 DIGITAL EXTENDED LOOP WITH DEDICATED DS3 INTEROFFICE TRANSPORT																
	DS3 Local Loop in combination-per mile per month			UNC3X	1L5ND	13.11										
	DS3 Local Loop in combination-Facility Termination per month			UNC3X	UE3PX	297.21										
	Interoffice Transport-Dedicated-DS3-Per Mile per month			UNC3X	1L5XX	3.02										
	Interoffice Transport-Dedicated-DS3 combination-Facility Termination per month			UNC3X	U1TF3	401.83										
EXTENDED STS-1 DIGITAL EXTENDED LOOP WITH DEDICATED STS-1 INTEROFFICE TRANSPORT																
	STS-1 Local Loop in combination-per mile per month			UNCSX	1L5ND	13.11										
	STS-1 Local Loop in combination-Facility Termination per month			UNCSX	UDLS1	358.24										
	Interoffice Transport-Dedicated-STS-1 combination-per mile per month			UNCSX	1L5XX	3.02										
	Interoffice Transport-Dedicated-STS-1 combination-Facility Termination per month			UNCSX	U1TFS	421.39										

UNBUNDLED NETWORK ELEMENTS - Kentucky

Attachment: 2 Exh. B

CATEGORY	RATE ELEMENTS	Interim	Zone	BCS	USOC	RATES ($)					Svc Order Submitted Elec per LSR	Svc Order Submitted Manually per LSR	Incremental Charge - Manual Svc Order vs. Electronic-1st	Incremental Charge - Manual Svc Order vs. Electronic-Add'l	Incremental Charge - Manual Svc Order vs. Electronic-Disc 1st	Incremental Charge - Manual Svc Order vs. Electronic-Disc Add'l
						Rec	Nonrecurring		NRC Disconnect		OSS Rates ($)					
							First	Add'l	First	Add'l	SOMEC	SOMAN	SOMAN	SOMAN	SOMAN	SOMAN
UNBUNDLED EXCHANGE ACCESS LOOP																
	2-WIRE HIGH BIT RATE DIGITAL SUBSCRIBER LINE (HDSL) COMPATIBLE LOOP															
	2W Unbundled HDSL Loop including manual service inquiry & facility reservation-Zone 1		1	UHL	UHL2X	10.06										
	2W Unbundled HDSL Loop including manual service inquiry & facility reservation-Zone 2		2	UHL	UHL2X	10.99										
	2W Unbundled HDSL Loop including manual service inquiry & facility reservation-Zone 3		3	UHL	UHL2X	12.20										
	2W Unbundled HDSL Loop without manual service inquiry and facility reservation-Zone 1		1	UHL	UHL2W	10.06										
	2W Unbundled HDSL Loop without manual service inquiry and facility reservation-Zone 2		2	UHL	UHL2W	10.99										
	2W Unbundled HDSL Loop without manual service inquiry and facility reservation-Zone 3		3	UHL	UHL2W	12.20										
	4-WIRE HIGH BIT RATE DIGITAL SUBSCRIBER LINE (HDSL) COMPATIBLE LOOP															
	4W Unbundled HDSL Loop including manual service inquiry and facility reservation-Zone 1		1	UHL	UHL4X	16.04										
	4W Unbundled HDSL Loop including manual service inquiry and facility reservation-Zone 2	I	2	UHL	UHL4X	18.03										
	4W Unbundled HDSL Loop including manual service inquiry and facility reservation-Zone 3		3	UHL	UHL4X	19.53										
	4W Unbundled HDSL Loop without manual service inquiry and facility reservation-Zone 1		1	UHL	UHL4W	16.04										
	4W Unbundled HDSL Loop without manual service inquiry and facility reservation-Zone 2		2	UHL	UHL4W	18.03										
	4W Unbundled HDSL Loop without manual service inquiry and facility reservation-Zone 3		3	UHL	UHL4W	19.53										
	4-WIRE DS1 DIGITAL LOOP															
	4W DS1 Digital Loop-Zone 1		1	USL	USLXX	99.44										
	4W DS1 Digital Loop-Zone 2		2	USL	USLXX	131.22										
	4W DS1 Digital Loop-Zone 3		3	USL	USLXX	342.42										
HIGH CAPACITY UNBUNDLED LOCAL LOOP																
	High Capacity Unbundled Local Loop-DS3-Per Mile per month			UE3	1L5ND	10.64										
	High Capacity Unbundled Local Loop-DS3-Facility Termination per month			UE3	UE3PX	354.56										
	High Capacity Unbundled Local Loop-STS-1-Per Mile per month			UDLSX	1L5ND	10.64										
	High Capacity Unbundled Local Loop-STS-1-Facility Termination per month			UDLSX	UDLS1	368.59										
UNBUNDLED DEDICATED TRANSPORT																
	INTEROFFICE CHANNEL - DEDICATED TRANSPORT															
	Interoffice Channel-Dedicated Channel-DS1-Per Mile per month			U1TD1	1L5XX	0.26										
	Interoffice Channel-Dedicated Tranport-DS1-Facility Termination			U1TD1	U1TF1	110.45										
	Interoffice Channel -Dedicated Transport-DS3-Per Mile per month			U1TD3	1L5XX	5.72										
	Interoffice Channel-Dedicated Transport-DS3-Facility Termination per month			U1TD3	U1TF3	1351.42										
	Interoffice Channel-Dedicated Transport-STS-1-Per Mile per month			U1TS1	1L5XX	5.72										
	Interoffice Channel-Dedicated Transport-STS-1-Facility Termination			U1TS1	U1TFS	1321.94										
	UNBUNDLED DARK FIBER															
	Dark Fiber-Interoffice Transport, Per Four Fiber Strands, Per Route Mile Or Fraction Thereof			UDF, UDFCX	1L5DF	35.35										
ENHANCED EXTENDED LINK (EELs)																
	NOTE: The monthly recurring and non-recurring charges below will apply and the Switch-As-Is Charge will not apply for UNE combinations provisioned as ' Ordinarily Combined' Network Elements.															
	NOTE: The monthly recurring and the Switch-As-Is Charge and not the non-recurring charges below will apply for UNE combinations provisioned as ' Currently Combined' Network Elements.															
	EXTENDED 4-WIRE DS1 DIGITAL EXTENDED LOOP WITH DEDICATED DS1 INTEROFFICE TRANSPORT															
	4W DS1 Digital Loop in Combination-Zone 1		1	UNC1X	USLXX	99.44										
	4W DS1 Digital Loop in Combination-Zone 2		2	UNC1X	USLXX	131.22										
	4W DS1 Digital Loop in Combination-Zone 3		3	UNC1X	USLXX	342.42										
	Interoffice Transport-Dedicated-DS1 combination-Per Mile per month			UNC1X	1L5XX	0.22										
	Interoffice Transport-Dedicated-DS1 combination-Facility Termination per month			UNC1X	U1TF1	90.87										
	EXTENDED DS3 DIGITAL EXTENDED LOOP WITH DEDICATED DS3 INTEROFFICE TRANSPORT															
	DS3 Local Loop in combination-per mile per month			UNC3X	1L5ND	10.64										
	DS3 Local Loop in combination-Facility Termination per month			UNC3X	UE3PX	354.56										
	Interoffice Transport-Dedicated-DS3-Per Mile per month			UNC3X	1L5XX	4.70										
	Interoffice Transport-Dedicated-DS3 combination-Facility Termination per month			UNC3X	U1TF3	1111.92										
	EXTENDED STS-1 DIGITAL EXTENDED LOOP WITH DEDICATED STS-1 INTEROFFICE TRANSPORT															
	STS-1 Local Loop in combination-per mile per month			UNCSX	1L5ND	10.64										
	STS-1 Local Loop in combination-Facility Termination per month			UNCSX	UDLS1	368.59										
	Interoffice Transport-Dedicated-STS-1 combination-per mile per month			UNCSX	1L5XX	4.70										
	Interoffice Transport-Dedicated-STS-1 combination-Facility Termination per month			UNCSX	U1TFS	1087.66										

UNBUNDLED NETWORK ELEMENTS - Louisiana														Attachment: 2 Exh. B			
CATEGORY	RATE ELEMENTS	Interim	Zone	BCS	USOC	RATES ($)					Svc Order Submitted Elec per LSR	Svc Order Submitted Manually per LSR	Incremental Charge - Manual Svc Order vs. Electronic-1st	Incremental Charge - Manual Svc Order vs. Electronic-Add'l	Incremental Charge - Manual Svc Order vs. Electronic-Disc 1st	Incremental Charge - Manual Svc Order vs. Electronic-Disc Add'l
						Rec	Nonrecurring		NRC Disconnect		OSS Rates ($)					
							First	Add'l	First	Add'l	SOMEC	SOMAN	SOMAN	SOMAN	SOMAN	SOMAN
UNBUNDLED EXCHANGE ACCESS LOOP																
2-WIRE HIGH BIT RATE DIGITAL SUBSCRIBER LINE (HDSL) COMPATIBLE LOOP																
	2W Unbundled HDSL Loop including manual service inquiry & facility reservation-Zone 1		1	UHL	UHL2X	11.26										
	2W Unbundled HDSL Loop including manual service inquiry & facility reservation-Zone 2		2	UHL	UHL2X	13.25										
	2W Unbundled HDSL Loop including manual service inquiry & facility reservation-Zone 3		3	UHL	UHL2X	14.65										
	2W Unbundled HDSL Loop without manual service inquiry and facility reservation-Zone 1		1	UHL	UHL2W	11.26										
	2W Unbundled HDSL Loop without manual service inquiry and facility reservation-Zone 2		2	UHL	UHL2W	13.25										
	2W Unbundled HDSL Loop without manual service inquiry and facility reservation-Zone 3		3	UHL	UHL2W	14.65										
4-WIRE HIGH BIT RATE DIGITAL SUBSCRIBER LINE (HDSL) COMPATIBLE LOOP																
	4W Unbundled HDSL Loop including manual service inquiry and facility reservation-Zone 1		1	UHL	UHL4X	18.68										
	4W Unbundled HDSL Loop including manual service inquiry and facility reservation-Zone 2		2	UHL	UHL4X	19.15										
	4W Unbundled HDSL Loop including manual service inquiry and facility reservation-Zone 3		3	UHL	UHL4X	19.94										
	4W Unbundled HDSL Loop without manual service inquiry and facility reservation-Zone 1		1	UHL	UHL4W	18.68										
	4W Unbundled HDSL Loop without manual service inquiry and facility reservation-Zone 2		2	UHL	UHL4W	19.15										
	4W Unbundled HDSL Loop without manual service inquiry and facility reservation-Zone 3		3	UHL	UHL4W	19.94										
4-WIRE DS1 DIGITAL LOOP																
	4W DS1 Digital Loop-Zone 1		1	USL	USLXX	98.56										
	4W DS1 Digital Loop-Zone 2		2	USL	USLXX	224.20										
	4W DS1 Digital Loop-Zone 3		3	USL	USLXX	565.73										
HIGH CAPACITY UNBUNDLED LOCAL LOOP																
	High Capacity Unbundled Local Loop-DS3-Per Mile per month			UE3	1L5ND	11.55										
	High Capacity Unbundled Local Loop-DS3-Facility Termination per month			UE3	UE3PX	416.69										
	High Capacity Unbundled Local Loop-STS-1-Per Mile per month			UDLSX	1L5ND	11.55										
	High Capacity Unbundled Local Loop-STS-1-Facility Termination per month			UDLSX	UDLS1	430.74										
UNBUNDLED DEDICATED TRANSPORT																
INTEROFFICE CHANNEL - DEDICATED TRANSPORT																
	Interoffice Channel-Dedicated Channel-DS1-Per Mile per month			U1TD1	1L5XX	0.30										
	Interoffice Channel-Dedicated Tranport-DS1-Facility Termination			U1TD1	U1TF1	81.04										
	Interoffice Channel -Dedicated Transport-DS3-Per Mile per month			U1TD3	1L5XX	6.95										
	Interoffice Channel-Dedicated Transport-DS3-Facility Termination per month			U1TD3	U1TF3	978.02										
	Interoffice Channel-Dedicated Transport-STS-1-Per Mile per month			U1TS1	1L5XX	6.95										
	Interoffice Channel-Dedicated Transport-STS-1-Facility Termination			U1TS1	U1TFS	954.72										
UNBUNDLED DARK FIBER																
	Dark Fiber-Interoffice Transport, Per Four Fiber Strands, Per Route Mile Or Fraction Thereof			UDF, UDFCX	1L5DF	29.07										
ENHANCED EXTENDED LINK (EELs)																
NOTE: The monthly recurring and non-recurring charges below will apply and the Switch-As-Is Charge will not apply for UNE combinations provisioned as ' Ordinarily Combined' Network Elements.																
NOTE: The monthly recurring and the Switch-As-Is Charge and not the non-recurring charges below will apply for UNE combinations provisioned as ' Currently Combined' Network Elements.																
EXTENDED 4-WIRE DS1 DIGITAL EXTENDED LOOP WITH DEDICATED DS1 INTEROFFICE TRANSPORT																
	4W DS1 Digital Loop in Combination-Zone 1		1	UNC1X	USLXX	98.56										
	4W DS1 Digital Loop in Combination-Zone 2		2	UNC1X	USLXX	224.20										
	4W DS1 Digital Loop in Combination-Zone 3		3	UNC1X	USLXX	565.73										
	Interoffice Transport-Dedicated-DS1 combination-Per Mile per month			UNC1X	1L5XX	0.30										
	Interoffice Transport-Dedicated-DS1 combination-Facility Termination per month			UNC1X	U1TF1	81.04										
EXTENDED DS3 DIGITAL EXTENDED LOOP WITH DEDICATED DS3 INTEROFFICE TRANSPORT																
	DS3 Local Loop in combination-per mile per month			UNC3X	1L5ND	11.55										
	DS3 Local Loop in combination-Facility Termination per month			UNC3X	UE3PX	416.69										
	Interoffice Transport-Dedicated-DS3-Per Mile per month			UNC3X	1L5XX	6.95										
	Interoffice Transport-Dedicated-DS3 combination-Facility Termination per month			UNC3X	U1TF3	978.02										
EXTENDED STS-1 DIGITAL EXTENDED LOOP WITH DEDICATED STS-1 INTEROFFICE TRANSPORT																
	STS-1 Local Loop in combination-per mile per month			UNCSX	1L5ND	11.55										
	STS-1 Local Loop in combination-Facility Termination per month			UNCSX	UDLS1	430.74										
	Interoffice Transport-Dedicated-STS-1 combination-per mile per month			UNCSX	1L5XX	6.95										
	Interoffice Transport-Dedicated-STS-1 combination-Facility Termination per month			UNCSX	U1TFS	954.72										

UNBUNDLED NETWORK ELEMENTS - Mississippi													Attachment: 2 Exh. B			
CATEGORY	RATE ELEMENTS	Interim	Zone	BCS	USOC	RATES ($)					Svc Order Submitted Elec per LSR	Svc Order Submitted Manually per LSR	Incremental Charge - Manual Svc Order vs. Electronic-1st	Incremental Charge - Manual Svc Order vs. Electronic-Add'l	Incremental Charge - Manual Svc Order vs. Electronic-Disc 1st	Incremental Charge - Manual Svc Order vs. Electronic-Disc Add'l
						Rec	Nonrecurring		NRC Disconnect		OSS Rates ($)					
								Add'l		Add'l	SOMEC	SOMAN	SOMAN	SOMAN	SOMAN	SOMAN
UNBUNDLED EXCHANGE ACCESS LOOP																
2-WIRE HIGH BIT RATE DIGITAL SUBSCRIBER LINE (HDSL) COMPATIBLE LOOP																
	2W Unbundled HDSL Loop including manual service inquiry & facility reservation-Zone 1		1	UHL	UHL2X	10.06										
	2W Unbundled HDSL Loop including manual service inquiry & facility reservation-Zone 2		2	UHL	UHL2X	10.60										
	2W Unbundled HDSL Loop including manual service inquiry & facility reservation-Zone 3		3	UHL	UHL2X	11.35										
	2W Unbundled HDSL Loop including manual service inquiry & facility reservation-Zone 4		4	UHL	UHL2X	12.03										
	2W Unbundled HDSL Loop without manual service inquiry and facility reservation-Zone 1		1	UHL	UHL2W	10.06										
	2W Unbundled HDSL Loop without manual service inquiry and facility reservation-Zone 2		2	UHL	UHL2W	10.60										
	2W Unbundled HDSL Loop without manual service inquiry and facility reservation-Zone 3		3	UHL	UHL2W	11.35										
	2W Unbundled HDSL Loop without manual service inquiry and facility reservation-Zone 4		4	UHL	UHL2W	12.03										
4-WIRE HIGH BIT RATE DIGITAL SUBSCRIBER LINE (HDSL) COMPATIBLE LOOP																
	4W Unbundled HDSL Loop including manual service inquiry and facility reservation-Zone 1		1	UHL	UHL4X	15.85										
	4W Unbundled HDSL Loop including manual service inquiry and facility reservation-Zone 2		2	UHL	UHL4X	15.44										
	4W Unbundled HDSL Loop including manual service inquiry and facility reservation-Zone 3		3	UHL	UHL4X	17.93										
	4W Unbundled HDSL Loop including manual service inquiry and facility reservation-Zone 4		4	UHL	UHL4X	16.63										
	4W Unbundled HDSL Loop without manual service inquiry and facility reservation-Zone 1		1	UHL	UHL4W	15.85										
	4W Unbundled HDSL Loop without manual service inquiry and facility reservation-Zone 2		2	UHL	UHL4W	15.44										
	4W Unbundled HDSL Loop without manual service inquiry and facility reservation-Zone 3		3	UHL	UHL4W	17.93										
	4W Unbundled HDSL Loop without manual service inquiry and facility reservation-Zone 4		4	UHL	UHL4W	16.63										
4-WIRE DS1 DIGITAL LOOP																
	4W DS1 Digital Loop-Zone 1		1	USL	USLXX	118.62										
	4W DS1 Digital Loop-Zone 2		2	USL	USLXX	148.79										
	4W DS1 Digital Loop-Zone 3		3	USL	USLXX	237.75										
	4W DS1 Digital Loop-Zone 4		4	USL	USLXX	527.23										
HIGH CAPACITY UNBUNDLED LOCAL LOOP																
	High Capacity Unbundled Local Loop-DS3-Per Mile per month			UE3	1L5ND	12.88										
	High Capacity Unbundled Local Loop-DS3-Facility Termination per month			UE3	UE3PX	375.07										
	High Capacity Unbundled Local Loop-STS-1-Per Mile per month			UDLSX	1L5ND	12.88										
	High Capacity Unbundled Local Loop-STS-1-Facility Termination per month			UDLSX	UDLS1	389.33										
UNBUNDLED DEDICATED TRANSPORT																
INTEROFFICE CHANNEL - DEDICATED TRANSPORT																
	Interoffice Channel-Dedicated Channel-DS1-Per Mile per month			U1TD1	1L5XX	0.23										
	Interoffice Channel-Dedicated Tranport-DS1-Facility Termination			U1TD1	U1TF1	65.93										
	Interoffice Channel -Dedicated Transport-DS3-Per Mile per month			U1TD3	1L5XX	5.47										
	Interoffice Channel-Dedicated Transport-DS3-Facility Termination per month			U1TD3	U1TF3	738.18										
	Interoffice Channel-Dedicated Transport-STS-1-Per Mile per month			U1TS1	1L5XX	5.47										
	Interoffice Channel-Dedicated Transport-STS-1-Facility Termination			U1TS1	U1TFS	740.84										
UNBUNDLED DARK FIBER																
	Dark Fiber-Interoffice Transport, Per Four Fiber Strands, Per Route Mile Or Fraction Thereof			UDF,UDFC	1L5DF	32.51										
ENHANCED EXTENDED LINK (EELs)																
NOTE: The monthly recurring and non-recurring charges below will apply and the Switch-As-Is Charge will not apply for UNE combinations provisioned as ' Ordinarily Combined' Network Elements.																
NOTE: The monthly recurring and the Switch-As-Is Charge and not the non-recurring charges below will apply for UNE combinations provisioned as ' Currently Combined' Network Elements.																
EXTENDED 4-WIRE DS1 DIGITAL EXTENDED LOOP WITH DEDICATED DS1 INTEROFFICE TRANSPORT																
	4W DS1 Digital Loop in Combination-Zone 1		1	UNC1X	USLXX	90.94										
	4W DS1 Digital Loop in Combination-Zone 2		2	UNC1X	USLXX	148.79										
	4W DS1 Digital Loop in Combination-Zone 3		3	UNC1X	USLXX	237.75										
	4W DS1 Digital Lcoal Loop in Combination-Zone 4		4	UNC1X	USLXX	527.23										
	Interoffice Transport-Dedicated-DS1 combination-Per Mile per month			UNC1X	1L5XX	0.23										
	Interoffice Transport-Dedicated-DS1 combination-Facility Termination per month			UNC1X	U1TF1	59.48										
EXTENDED DS3 DIGITAL EXTENDED LOOP WITH DEDICATED DS3 INTEROFFICE TRANSPORT																
	DS3 Local Loop in combination-per mile per month			UNC3X	1L5ND	12.88										
	DS3 Local Loop in combination-Facility Termination per month			UNC3X	UE3PX	375.07										
	Interoffice Transport-Dedicated-DS3-Per Mile per month			UNC3X	1L5XX	5.47										
	Interoffice Transport-Dedicated-DS3 combination-Facility Termination per month			UNC3X	U1TF3	738.18										
EXTENDED STS-1 DIGITAL EXTENDED LOOP WITH DEDICATED STS-1 INTEROFFICE TRANSPORT																
	STS-1 Local Loop in combination-per mile per month			UNCSX	1L5ND	12.88										
	STS-1 Local Loop in combination-Facility Termination per month			UNCSX	UDLS1	389.33										
	Interoffice Transport-Dedicated-STS-1 combination-per mile per month			UNCSX	1L5XX	5.47										

UNBUNDLED NETWORK ELEMENTS - Mississippi														Attachment: 2 Exh. B			
CATEGORY		RATE ELEMENTS	Interim	Zone	BCS	USOC	RATES ($)					Svc Order Submitted Elec per LSR	Svc Order Submitted Manually per LSR	Incremental Charge - Manual Svc Order vs. Electronic-1st	Incremental Charge - Manual Svc Order vs. Electronic-Add'l	Incremental Charge - Manual Svc Order vs. Electronic-Disc 1st	Incremental Charge - Manual Svc Order vs. Electronic-Disc Add'l
							Rec	Nonrecurring		NRC Disconnect		OSS Rates ($)					
									Add'l		Add'l	SOMEC	SOMAN	SOMAN	SOMAN	SOMAN	SOMAN
		Interoffice Transport-Dedicated-STS-1 combination-Facility Termination per month			UNCSX	U1TFS	740.84										

UNBUNDLED NETWORK ELEMENTS - North Carolina														Attachment: 2 Exh. B			
CATEGORY	RATE ELEMENTS	Interim	Zone	BCS	USOC	RATES ($)					Svc Order Submitted Elec per LSR	Svc Order Submitted Manually per LSR	Incremental Charge - Manual Svc Order vs. Electronic-1st	Incremental Charge - Manual Svc Order vs. Electronic-Add'l	Incremental Charge - Manual Svc Order vs. Electronic-Disc 1st	Incremental Charge - Manual Svc Order vs. Electronic-Disc Add'l
						Rec	Nonrecurring		NRC Disconnect		OSS Rates ($)					
							First	Add'l	First	Add'l	SOMEC	SOMAN	SOMAN	SOMAN	SOMAN	SOMAN
	NOTE: The NC rates in this Exhibit B are applicable to "embedded base" services as of March 10, 2005.															
UNBUNDLED EXCHANGE ACCESS LOOP																
	2-WIRE HIGH BIT RATE DIGITAL SUBSCRIBER LINE (HDSL) COMPATIBLE LOOP															
	2W Unbundled HDSL Loop including manual service inquiry & facility reservation-Zone 1		1	UHL	UHL2X	10.36										
	2W Unbundled HDSL Loop including manual service inquiry & facility reservation-Zone 2		2	UHL	UHL2X	17.10										
	2W Unbundled HDSL Loop including manual service inquiry & facility reservation-Zone 3		3	UHL	UHL2X	26.24										
	2W Unbundled HDSL Loop without manual service inquiry and facility reservation-Zone 1		1	UHL	UHL2W	10.36										
	2W Unbundled HDSL Loop without manual service inquiry and facility reservation-Zone 2		2	UHL	UHL2W	17.10										
	2W Unbundled HDSL Loop without manual service inquiry and facility reservation-Zone 3		3	UHL	UHL2W	26.24										
	4-WIRE HIGH BIT RATE DIGITAL SUBSCRIBER LINE (HDSL) COMPATIBLE LOOP															
	4W Unbundled HDSL Loop including manual service inquiry and facility reservation-Zone 1		1	UHL	UHL4X	12.21										
	4W Unbundled HDSL Loop including manual service inquiry and facility reservation-Zone 2		2	UHL	UHL4X	20.32										
	4W Unbundled HDSL Loop including manual service inquiry and facility reservation-Zone 3		3	UHL	UHL4X	31.33										
	4W Unbundled HDSL Loop without manual service inquiry and facility reservation-Zone 1		1	UHL	UHL4W	12.21										
	4W Unbundled HDSL Loop without manual service inquiry and facility reservation-Zone 2		2	UHL	UHL4W	20.32										
	4W Unbundled HDSL Loop without manual service inquiry and facility reservation-Zone 3		3	UHL	UHL4W	31.33										
	4-WIRE DS1 DIGITAL LOOP															
	4W DS1 Digital Loop-Zone 1		1	USL	USLXX	54.74										
	4W DS1 Digital Loop-Zone 2		2	USL	USLXX	97.01										
	4W DS1 Digital Loop-Zone 3		3	USL	USLXX	154.43										
HIGH CAPACITY UNBUNDLED LOCAL LOOP																
	High Capacity Unbundled Local Loop-DS3-Per Mile per month			UE3	1L5ND	15.33										
	High Capacity Unbundled Local Loop-DS3-Facility Termination per month			UE3	UE3PX	518.29										
	High Capacity Unbundled Local Loop-STS-1-Per Mile per month			UDLSX	1L5ND	15.33										
	High Capacity Unbundled Local Loop-STS-1-Facility Termination per month			UDLSX	UDLS1	533.90										
UNBUNDLED DEDICATED TRANSPORT																
	INTEROFFICE CHANNEL - DEDICATED TRANSPORT															
	Interoffice Channel-Dedicated Channel-DS1-Per Mile per month			U1TD1	1L5XX	0.66										
	Interoffice Channel-Dedicated Tranport-DS1-Facility Termination			U1TD1	U1TF1	81.98										
	Interoffice Channel -Dedicated Transport-DS3-Per Mile per month			U1TD3	1L5XX	14.93										
	Interoffice Channel-Dedicated Transport-DS3-Facility Termination per month			U1TD3	U1TF3	828.44										
	Interoffice Channel-Dedicated Transport-STS-1-Per Mile per month			U1TS1	1L5XX	7.06										
	Interoffice Channel-Dedicated Transport-STS-1-Facility Termination			U1TS1	U1TFS	908.93										
	UNBUNDLED DARK FIBER															
	Dark Fiber-Interoffice Transport, Per Four Fiber Strands, Per Route Mile Or Fraction Thereof			UDF, UDFCX	1L5DF	28.49										
ENHANCED EXTENDED LINK (EELs)																
	NOTE: The monthly recurring and non-recurring charges below will apply and the Switch-As-Is Charge will not apply for UNE combinations provisioned as ' Ordinarily Combined' Network Elements.															
	NOTE: The monthly recurring and the Switch-As-Is Charge and not the non-recurring charges below will apply for UNE combinations provisioned as ' Currently Combined' Network Elements.															
	EXTENDED 4-WIRE DS1 DIGITAL EXTENDED LOOP WITH DEDICATED DS1 INTEROFFICE TRANSPORT															
	4W DS1 Digital Loop in Combination-Zone 1		1	UNC1X	USLXX	54.74										
	4W DS1 Digital Loop in Combination-Zone 2		2	UNC1X	USLXX	97.01										
	4W DS1 Digital Loop in Combination-Zone 3		3	UNC1X	USLXX	154.43										
	Interoffice Transport-Dedicated-DS1 combination-Per Mile per month			UNC1X	1L5XX	0.66										
	Interoffice Transport-Dedicated-DS1 combination-Facility Termination per month			UNC1X	U1TF1	81.98										
	EXTENDED DS3 DIGITAL EXTENDED LOOP WITH DEDICATED DS3 INTEROFFICE TRANSPORT															
	DS3 Local Loop in combination-per mile per month			UNC3X	1L5ND	15.33										
	DS3 Local Loop in combination-Facility Termination per month			UNC3X	UE3PX	518.29										
	Interoffice Transport-Dedicated-DS3-Per Mile per month			UNC3X	1L5XX	14.93										
	Interoffice Transport-Dedicated-DS3 combination-Facility Termination per month			UNC3X	U1TF3	828.44										
	EXTENDED STS-1 DIGITAL EXTENDED LOOP WITH DEDICATED STS-1 INTEROFFICE TRANSPORT															
	STS-1 Local Loop in combination-per mile per month			UNCSX	1L5ND	15.33										
	STS-1 Local Loop in combination-Facility Termination per month			UNCSX	UDLS1	533.90										
	Interoffice Transport-Dedicated-STS-1 combination-per mile per month			UNCSX	1L5XX	7.06										
	Interoffice Transport-Dedicated-STS-1 combination-Facility Termination per month			UNCSX	U1TFS	908.93										

UNBUNDLED NETWORK ELEMENTS - South Carolina

Attachment: 2 Exh. B

CATEGORY	RATE ELEMENTS	Interim	Zone	BCS	USOC	RATES ($) Rec	Nonrecurring First	Nonrecurring Add'l	NRC Disconnect First	NRC Disconnect Add'l	Svc Order Submitted Elec per LSR	Svc Order Submitted Manually per LSR	Incremental Charge - Manual Svc Order vs. Electronic-1st	Incremental Charge - Manual Svc Order vs. Electronic-Add'l	Incremental Charge - Manual Svc Order vs. Electronic-Disc 1st	Incremental Charge - Manual Svc Order vs. Electronic-Disc Add'l
											OSS Rates ($)					
							First	Add'l	First	Add'l	SOMEC	SOMAN	SOMAN	SOMAN	SOMAN	SOMAN
UNBUNDLED EXCHANGE ACCESS LOOP																
2-WIRE HIGH BIT RATE DIGITAL SUBSCRIBER LINE (HDSL) COMPATIBLE LOOP																
	2W Unbundled HDSL Loop including manual service inquiry & facility reservation-Zone 1		1	UHL	UHL2X	11.02										
	2W Unbundled HDSL Loop including manual service inquiry & facility reservation-Zone 2		2	UHL	UHL2X	12.56										
	2W Unbundled HDSL Loop including manual service inquiry & facility reservation-Zone 3		3	UHL	UHL2X	13.11										
	2W Unbundled HDSL Loop without manual service inquiry and facility reservation-Zone 1		1	UHL	UHL2W	11.02										
	2W Unbundled HDSL Loop without manual service inquiry and facility reservation-Zone 2		2	UHL	UHL2W	12.56										
	2W Unbundled HDSL Loop without manual service inquiry and facility reservation-Zone 3		3	UHL	UHL2W	13.11										
4-WIRE HIGH BIT RATE DIGITAL SUBSCRIBER LINE (HDSL) COMPATIBLE LOOP																
	4W Unbundled HDSL Loop including manual service inquiry and facility reservation-Zone 1		1	UHL	UHL4X	18.42										
	4W Unbundled HDSL Loop including manual service inquiry and facility reservation-Zone 2		2	UHL	UHL4X	16.48										
	4W Unbundled HDSL Loop including manual service inquiry and facility reservation-Zone 3		3	UHL	UHL4X	19.37										
	4W Unbundled HDSL Loop without manual service inquiry and facility reservation-Zone 1		1	UHL	UHL4W	18.42										
	4W Unbundled HDSL Loop without manual service inquiry and facility reservation-Zone 2		2	UHL	UHL4W	16.48										
	4W Unbundled HDSL Loop without manual service inquiry and facility reservation-Zone 3		3	UHL	UHL4W	19.37										
4-WIRE DS1 DIGITAL LOOP																
	4W DS1 Digital Loop-Zone 1		1	USL	USLXX	91.44										
	4W DS1 Digital Loop-Zone 2		2	USL	USLXX	156.40										
	4W DS1 Digital Loop-Zone 3		3	USL	USLXX	263.52										
HIGH CAPACITY UNBUNDLED LOCAL LOOP																
	High Capacity Unbundled Local Loop-DS3-Per Mile per month			UE3	1L5ND	14.10										
	High Capacity Unbundled Local Loop-DS3-Facility Termination per month			UE3	UE3PX	352.31										
	High Capacity Unbundled Local Loop-STS-1-Per Mile per month			UDLSX	1L5ND	14.10										
	High Capacity Unbundled Local Loop-STS-1-Facility Termination per month			UDLSX	UDLS1	360.51										
UNBUNDLED DEDICATED TRANSPORT																
INTEROFFICE CHANNEL - DEDICATED TRANSPORT																
	Interoffice Channel-Dedicated Channel-DS1-Per Mile per month			U1TD1	1L5XX	0.39										
	Interoffice Channel-Dedicated Tranport-DS1-Facility Termination			U1TD1	U1TF1	88.71										
	Interoffice Channel -Dedicated Transport-DS3-Per Mile per month			U1TD3	1L5XX	9.22										
	Interoffice Channel-Dedicated Transport-DS3-Facility Termination per month			U1TD3	U1TF3	1012.75										
	Interoffice Channel-Dedicated Transport-STS-1-Per Mile per month			U1TS1	1L5XX	9.22										
	Interoffice Channel-Dedicated Transport-STS-1-Facility Termination			U1TS1	U1TFS	1012.63										
UNBUNDLED DARK FIBER																
	Dark Fiber-Interoffice Transport, Per Four Fiber Strands, Per Route Mile Or Fraction Thereof			UDF, UDFCX	1L5DF	41.87										
ENHANCED EXTENDED LINK (EELs)																
NOTE: The monthly recurring and non-recurring charges below will apply and the Switch-As-Is Charge will not apply for UNE combinations provisioned as ' Ordinarily Combined' Network Elements.																
NOTE: The monthly recurring and the Switch-As-Is Charge and not the non-recurring charges below will apply for UNE combinations provisioned as ' Currently Combined' Network Elements.																
EXTENDED 4-WIRE DS1 DIGITAL EXTENDED LOOP WITH DEDICATED DS1 INTEROFFICE TRANSPORT																
	4W DS1 Digital Loop in Combination-Zone 1		1	UNC1X	USLXX	104.50										
	4W DS1 Digital Loop in Combination-Zone 2		2	UNC1X	USLXX	178.74										
	4W DS1 Digital Loop in Combination-Zone 3		3	UNC1X	USLXX	301.17										
	Interoffice Transport-Dedicated-DS1 combination-Per Mile per month			UNC1X	1L5XX	0.31										
	Interoffice Transport-Dedicated-DS1 combination-Facility Termination per month			UNC1X	U1TF1	88.71										
EXTENDED DS3 DIGITAL EXTENDED LOOP WITH DEDICATED DS3 INTEROFFICE TRANSPORT																
	DS3 Local Loop in combination-per mile per month			UNC3X	1L5ND	14.10										
	DS3 Local Loop in combination-Facility Termination per month			UNC3X	UE3PX	352.31										
	Interoffice Transport-Dedicated-DS3-Per Mile per month			UNC3X	1L5XX	9.22										
	Interoffice Transport-Dedicated-DS3 combination-Facility Termination per month			UNC3X	U1TF3	1012.75										
EXTENDED STS-1 DIGITAL EXTENDED LOOP WITH DEDICATED STS-1 INTEROFFICE TRANSPORT																
	STS-1 Local Loop in combination-per mile per month			UNCSX	1L5ND	14.10										
	STS-1 Local Loop in combination-Facility Termination per month			UNCSX	UDLS1	360.51										
	Interoffice Transport-Dedicated-STS-1 combination-per mile per month			UNCSX	1L5XX	9.22										
	Interoffice Transport-Dedicated-STS-1 combination-Facility Termination per month			UNCSX	U1TFS	1012.63										

UNBUNDLED NETWORK ELEMENTS - Tennessee														Attachment: 2 Exh. B			
CATEGORY	RATE ELEMENTS	Interim	Zone	BCS	USOC	RATES ($)					Svc Order Submitted Elec per LSR	Svc Order Submitted Manually per LSR	Incremental Charge - Manual Svc Order vs. Electronic-1st	Incremental Charge - Manual Svc Order vs. Electronic-Add'l	Incremental Charge - Manual Svc Order vs. Electronic-Disc 1st	Incremental Charge - Manual Svc Order vs. Electronic-Disc Add'l
						Rec	Nonrecurring		NRC Disconnect		OSS Rates ($)					
							First	Add'l	First	Add'l	SOMEC	SOMAN	SOMAN	SOMAN	SOMAN	SOMAN
UNBUNDLED EXCHANGE ACCESS LOOP																
	2-WIRE HIGH BIT RATE DIGITAL SUBSCRIBER LINE (HDSL) COMPATIBLE LOOP															
	2W Unbundled HDSL Loop including manual service inquiry & facility reservation-Zone 1		1	UHL	UHL2X	11.09										
	2W Unbundled HDSL Loop including manual service inquiry & facility reservation-Zone 2		2	UHL	UHL2X	16.61										
	2W Unbundled HDSL Loop including manual service inquiry & facility reservation-Zone 3		3	UHL	UHL2X	27.74										
	2W Unbundled HDSL Loop without manual service inquiry and facility reservation-Zone 1		1	UHL	UHL2W	11.09										
	2W Unbundled HDSL Loop without manual service inquiry and facility reservation-Zone 2		2	UHL	UHL2W	16.61										
	2W Unbundled HDSL Loop without manual service inquiry and facility reservation-Zone 3		3	UHL	UHL2W	27.74										
	4-WIRE HIGH BIT RATE DIGITAL SUBSCRIBER LINE (HDSL) COMPATIBLE LOOP															
	4W Unbundled HDSL Loop including manual service inquiry and facility reservation-Zone 1		1	UHL	UHL4X	14.26										
	4W Unbundled HDSL Loop including manual service inquiry and facility reservation-Zone 2		2	UHL	UHL4X	21.37										
	4W Unbundled HDSL Loop including manual service inquiry and facility reservation-Zone 3		3	UHL	UHL4X	35.68										
	4W Unbundled HDSL Loop without manual service inquiry and facility reservation-Zone 1		1	UHL	UHL4W	14.26										
	4W Unbundled HDSL Loop without manual service inquiry and facility reservation-Zone 2		2	UHL	UHL4W	21.37										
	4W Unbundled HDSL Loop without manual service inquiry and facility reservation-Zone 3		3	UHL	UHL4W	35.68										
	4-WIRE DS1 DIGITAL LOOP															
	4W DS1 Digital Loop-Zone 1		1	USL	USLXX	59.09										
	4W DS1 Digital Loop-Zone 2		2	USL	USLXX	88.53										
	4W DS1 Digital Loop-Zone 3		3	USL	USLXX	147.82										
HIGH CAPACITY UNBUNDLED LOCAL LOOP																
	High Capacity Unbundled Local Loop-DS3-Per Mile per month			UE3	1L5ND	10.57										
	High Capacity Unbundled Local Loop-DS3-Facility Termination per month			UE3	UE3PX	430.38										
	High Capacity Unbundled Local Loop-STS-1-Per Mile per month			UDLSX	1L5ND	10.57										
	High Capacity Unbundled Local Loop-STS-1-Facility Termination per month			UDLSX	UDLS1	447.75										
UNBUNDLED DEDICATED TRANSPORT																
	INTEROFFICE CHANNEL - DEDICATED TRANSPORT															
	Interoffice Channel-Dedicated Channel-DS1-Per Mile per month			U1TD1	1L5XX	0.40963										
	Interoffice Channel-Dedicated Tranport-DS1-Facility Termination			U1TD1	U1TF1	89.54										
	Interoffice Channel -Dedicated Transport-DS3-Per Mile per month			U1TD3	1L5XX	2.69										
	Interoffice Channel-Dedicated Transport-DS3-Facility Termination per month			U1TD3	U1TF3	976.34										
	Interoffice Channel-Dedicated Transport-STS-1-Per Mile per month			U1TS1	1L5XX	2.69										
	Interoffice Channel-Dedicated Transport-STS-1-Facility Termination			U1TS1	U1TFS	976.70										
	UNBUNDLED DARK FIBER - Stand Alone or in Combination															
	Dark Fiber-Interoffice Transport, Per Four Fiber Strands, Per Route Mile Or Fraction Thereof			UDF, UDFCX	1L5DF	33.05										
ENHANCED EXTENDED LINK (EELs) AND THEIR COMPONETS																
	NOTE: The monthly recurring and non-recurring charges below will apply and the Switch-As-Is Charge will not apply for UNE combinations provisioned as ' Ordinarily Combined' Network Elements.															
	NOTE: The monthly recurring and the Switch-As-Is Charge and not the non-recurring charges below will apply for UNE combinations provisioned as ' Currently Combined' Network Elements.															
	EXTENDED 4-WIRE DS1 DIGITAL EXTENDED LOOP WITH DEDICATED DS1 INTEROFFICE TRANSPORT															
	4W DS1 Digital Loop in Combination-Zone 1		1	UNC1X	USLXX	59.09										
	4W DS1 Digital Loop in Combination-Zone 2		2	UNC1X	USLXX	88.53										
	4W DS1 Digital Loop in Combination-Zone 3		3	UNC1X	USLXX	147.82										
	Interoffice Transport-Dedicated-DS1 combination-Per Mile per month			UNC1X	1L5XX	0.40963										
	Interoffice Transport-Dedicated-DS1 combination-Facility Termination per month			UNC1X	U1TF1	89.54										
	EXTENDED DS3 DIGITAL EXTENDED LOOP WITH DEDICATED DS3 INTEROFFICE TRANSPORT															
	DS3 Local Loop in combination-per mile per month			UNC3X	1L5ND	10.57										
	DS3 Local Loop in combination-Facility Termination per month			UNC3X	UE3PX	430.38										
	Interoffice Transport-Dedicated-DS3-Per Mile per month			UNC3X	1L5XX	2.69										
	Interoffice Transport-Dedicated-DS3 combination-Facility Termination per month			UNC3X	U1TF3	976.34										
	EXTENDED STS-1 DIGITAL EXTENDED LOOP WITH DEDICATED STS-1 INTEROFFICE TRANSPORT															
	STS-1 Local Loop in combination-per mile per month			UNCSX	1L5ND	10.57										
	STS-1 Local Loop in combination-Facility Termination per month			UNCSX	UDLS1	447.75										
	Interoffice Transport-Dedicated-STS-1 combination-per mile per month			UNCSX	1L5XX	2.69										
	Interoffice Transport-Dedicated-STS-1 combination-Facility Termination per month			UNCSX	U1TFS	976.70										

Attachment 3A

Network Interconnection - CMRS

TABLE OF CONTENTS

1 CMRS Definitions……..3

2 CMRS Methods of Network Interconnection……..4

3 CMRS Interconnection Trunk Group Options……...6

4 CMRS Compensation and Billing…….7

5 CMRS Non-Local Traffic Interconnection and Compensation……..9

6 CMRS Access to 911/E911 Emergency Network…….11

7 CMRS Access to Signaling and Signaling Databases……..11

8 CMRS Network Design and Management……12

9 CMRS Auditing Procedures……..13

10 CMRS Meet Point Billing Option……..13

NETWORK INTERCONNECTION - CMRS

1 **CMRS Definitions: (For the purpose of this CMRS Attachment)**

1.1 **Affiliate** is defined as a person that (directly or indirectly) owns or controls, is owned or controlled by, or is under common ownership or control with, another person. For purposes of this paragraph, the term "own" means to own an equity interest (or equivalent thereof) of more than 10 percent.

1.2 **Commission** is defined as the appropriate regulatory agency in each state of AT&T's nine state region: Alabama, Florida, Georgia, Kentucky, Louisiana, Mississippi, North Carolina, South Carolina, and Tennessee.

1.3 **CMRS Local Traffic** is defined for purposes of reciprocal compensation under this Agreement as: (1) any telephone call that originates on the network of Carrier within a Major Trading Area (MTA) and terminates on the network of AT&T in the same MTA and within the Local Access and Transport Area ("LATA") in which the call is handed off from Carrier to AT&T, and (2) any telephone call that originates on the network of AT&T that is handed off directly to Carrier in AT&T's service territory and in the same LATA in which the call originates, and terminates on the network of Carrier in the MTA in which the call is handed off from AT&T to Carrier. For purposes of this Agreement, LATA shall have the same definition as that contained in the Telecommunications Act of 1996, and MTA shall have the same definition as that contained in the FCC's rules. Traffic delivered to or received from an interexchange carrier is not Local Traffic.

1.4 **CMRS Local Interconnection** is defined as the delivery of Local Traffic to be terminated on each Party's local network so that end users of either Party have the ability to reach end users of the other Party without the use of any access code or substantial delay in the processing of the call.

1.5 **CMRS Non-Local Traffic** is defined as all traffic that is not Local Traffic or access services.

1.6 **Point of Interconnection (POI)** is defined as the physical geographic location(s), within AT&T's service area within a LATA, at which the Parties terminate interconnection facilities for the origination and/or termination of traffic. This point establishes the technical interface, the test point(s), and the point(s) for operational division of responsibility between AT&T's network and Carrier's network.

1.7 **Telecommunications Act of 1996 (Act)** means Public Law 104-104 of the United States Congress effective February 8, 1996. The Act amended the Communications Act of 1934 (47, U.S.C. Section 1 et. seq.).

1.8 **Third Party Carrier** is any telecommunications carrier other than Carrier or AT&T.

1.9 **Transit Traffic** is traffic originating on Carrier's network that is switched and/or transported by AT&T and delivered to a Third Party Carrier's network, or traffic originating on a Third Party Carrier's network that is switched and/or transported by AT&T and delivered to Carrier's network.

1.10 **Type 1 Interconnection** is a trunk side connection between a AT&T end office and a Carrier's POI and provides the capability to access all AT&T end offices within the LATA. Type 1 Interconnection is technically defined in Telcordia Technical Reference GR-145-CORE, Issue 2 May 1998, as it may be amended or replaced from time to time.

1.11 **Type 2A Interconnection** are one-way or two-way connections that provide a trunk side connection between a AT&T tandem switch and a Carrier's POI and provides access to all AT&T end offices and Third Party Carriers subtending the AT&T tandem. Type 2A Interconnection is technically defined in Telcordia Technical Reference GR-145-CORE, Issue 2 May 1998, as it may be amended or replaced from time to time).

1.12 **Type 2B Interconnection** are one-way or two-way connections that provide a high usage route between a AT&T end office and a Carrier's POI and provides access to all AT&T NXX codes homed in that specific end office and is provided in conjunction with Type 2A Interconnection. Type 2B Interconnection is technically defined in Telcordia Technical Reference GR-145-CORE, Issue 2 May 1998, as it may be amended or replaced from time to time.

2. CMRS Methods of Network Interconnection

2.1 By mutual agreement of the Parties, trunk group arrangements between Carrier and AT&T shall be established in accordance with subsections below. Each Party will use commercially reasonable efforts to construct its network, including the interconnecting facilities, to achieve optimum cost effectiveness and network efficiency.

2.1.1 Carrier will provide to AT&T the appropriate Operating Company Number (OCN) for each state as assigned by NECA and the Interexchange Access Customer (aka Access Customer Name and Abbreviation (ACNA)) as assigned by Telcordia.

2.1.2 Company Identifiers.

a. OCN and ACNA. Carrier shall provide AT&T with documentation identifying the OCN and ACNA assigned to be in the legal name as reflected in the preamble of this Agreement. The ACNA will be used to order services pursuant to this Agreement and will not be shared by Carrier with another entity.

b. If Carrier needs to change, add to, eliminate or convert its OCN(s), ACNAs and other identifying codes (collectively "Company Identifiers") under which it operates when Carrier has already been conducting business utilizing those Company Identifiers, Carrier shall pay all charges as a result of such change, addition, elimination or conversion to the new Company

Identifiers. Such charges include, but are not limited to, all time required to make system updates to all of Carriers records and any other changes to AT&T systems and will be handled in a separately negotiated agreement or as otherwise required by AT&T.

2.2 The following methods of network interconnection are available for the provisioning of CMRS Interconnection Service. Such CMRS Interconnections Service and associated methods of network interconnection are available only within AT&T's franchised service territory.

2.3 There are three methods of interconnecting facilities: (1) interconnection via facilities owned, provisioned and/or provided by either Party to the other Party; (2) physical collocation; and (3) virtual collocation where physical collocation is not practical for technical reasons or because of space limitations. Type 1, Type 2A and Type 2B interconnection arrangements shall be purchased from AT&T's General Subscriber Services Tariff, Section A35, or, in the case of North Carolina, in the North Carolina Connection and Traffic Interchange Agreement effective June 30, 1994, as amended. Rates, terms and conditions for both virtual and physical collocation may be provided in a separate collocation agreement or tariff.

2.4 The Parties will accept and provide any of the preceding methods of interconnection. Reciprocal connectivity shall be established to at least one AT&T tandem within every LATA Carrier desires to serve, or Carrier may elect to interconnect directly at an end office for interconnection to AT&T end users served by that end office. Such interconnecting facilities shall conform, at a minimum, to the telecommunications industry standard of DS-1 pursuant to Bellcore Standard No. TR-NWT-00499. Signal transfer point, Signaling System 7 (SS7) connectivity is required at each interconnection point after Carrier implements SS7 capability within its own network. AT&T will provide out-of-band signaling using Common Channel Signaling Access Capability where technically and economically feasible, in accordance with the technical specifications set forth in the AT&T Guidelines to Technical Publication, TR-TSV-000905. The Parties' facilities shall provide the necessary on-hook, off-hook answer and disconnect supervision and shall hand off calling party number ID when technically feasible. In the event a Party interconnects via the purchase of facilities and/or services from the other Party, the appropriate intrastate tariff, as amended from time to time, will apply. In the event that such facilities are used for two-way interconnection, the appropriate recurring charges for such facilities will be shared by the Parties based upon percentages of traffic on such facilities.

2.5 Nothing herein shall prevent Carrier from utilizing existing collocation facilities for local interconnection; provided, however, that if Carrier orders new facilities for interconnection or rearranges any facilities presently used for its alternate access business in order to use such facilities for local interconnection hereunder and a AT&T charge is applicable thereto, AT&T shall only charge Carrier the lower of the interstate or intrastate tariffed rate or promotional rate.

2.6 When the Parties provide an access service connection between an Interexchange Carrier (IXC) and each other, each Party will provide its own access services to the IXC. If access charges are billed, each Party will bill its own access service rates to the IXC.

2.7 The ordering and provision of all services purchased from AT&T by Carrier shall be as set forth in the AT&T Wireless Customer Guide as that guide is amended by AT&T from time to time during the term of this Agreement. This guide may be found, as of the effective date of this agreement, at AT&T's Interconnection Web site: http://www.interconnection.bellsouth.com/

3 **CMRS Interconnection Trunk Group Options**

3.1 **One-Way Trunk Group Arrangement**

If Carrier elects to utilize a one-way trunking arrangement, the following will apply:

3.1.1 AT&T will provide and bear the cost of a one-way trunk group to provide for the delivery of Local Traffic from AT&T to Carrier's POI within AT&T's service territory and within the LATA, and Carrier will provide and bear the cost of trunk group's for the delivery of Carrier's originated Local Traffic and for the receipt and delivery of Transit Traffic to each AT&T tandem and end office at which the Parties interconnect.

3.2 **Two-Way Trunk Group Arrangement**

If the Parties mutually agree upon a two-way trunking arrangement, the following will apply:

3.2.1 AT&T and Carrier will share the cost of the two-way trunk group carrying both Parties' traffic proportionally when purchased via the General Subscriber Services Tariff, Section A35, or, in the case of North Carolina, in the North Carolina Connection and Traffic Interchange Agreement effective June 30, 1994, as amended from time to time. AT&T will bear the cost of the two-way trunk group for the portion of the facility utilized for the delivery of AT&T originated Local Traffic to Carrier's POI within AT&T's service territory and within the LATA (calculated based on the number of minutes of traffic identified as AT&T's divided by the total minutes of use on the facility), and Carrier will provide and bear the cost of the two-way trunk group for all other traffic, including Transit Traffic.

3.3 If the Parties cannot agree upon a trunk group arrangement, AT&T will provide and bear the cost of a one-way trunk group to provide for the delivery of Local Traffic from AT&T to Carrier's POI within AT&T's service territory and within the LATA. Carrier will provide and bear the cost of one-way or two-way trunk group(s) for the delivery of all Carrier's originated traffic, and also the delivery and receipt of Transit Traffic.

4. **CMRS Compensation and Billing**

4.1 **Local Traffic Compensation**

4.1.1 Each Party will pay the other for terminating its Local Traffic on the other's network at the Local Interconnection rates as set forth in Attachment B1.1. These rates are reciprocal for mobile-to-land and land-to-mobile calls.

4.1.2 **Local Traffic Measurement**

4.1.2.1 If Carrier has recording capability, but recording limitations prohibit Carrier's ability to determine the amount of AT&T originated Local Traffic terminated to Carrier over two-way multi-use facilities, then upon Carrier's written request to the Invoice Payment Center (IPC), AT&T will provide to Carrier on a quarterly basis the percent of total terminating traffic to Carrier that was originated by AT&T. Such percent will be used by Carrier to bill AT&T for the AT&T Local Traffic for the following quarter. All AT&T originated traffic terminated to Carrier will be billed to AT&T as Local Traffic.

4.1.2.2 If Carrier has no recording capability and cannot determine the amount of AT&T originated traffic terminated to Carrier, a mutually agreed upon methodology for reciprocal billing percentages for Local Traffic will be used.

4.1.2.3 AT&T shall utilize actual traffic measurements as defined below, if available, to classify and bill Carrier for Carrier's originated Local Traffic terminating to AT&T. If AT&T is unable to measure actual traffic, AT&T shall apply the default percentage for local traffic to classify and bill traffic in accordance with this Section.

4.1.2.4 The Parties' traffic on AT&T's interLATA Extended Area Service (EAS) routes shall be considered Local Traffic and compensation for the termination of such traffic shall be pursuant to the terms of this Section. EAS routes are those exchanges within a Basic Local Calling Area, as defined in Section A3 of AT&T's General Subscriber Services Tariff.

4.2 **Compensation For Facilities**

4.2.1 Where one-way trunking is used, each Party will be solely responsible for the recurring and non-recurring cost of its facility up to the POI.

4.2.2 Where the Parties elect to utilize one-way trunking, Carrier will bear the cost for two-way interconnection facilities utilized for the delivery and receipt of Transit Traffic.

4.2.3 Where two-way trunking is mutually agreed upon, the Parties agree to share proportionately in the recurring costs of two-way interconnection facilities purchased via the General Subscriber Services Tariff, Section A35, or, in the case of North Carolina, in the North Carolina Connection and Traffic Interchange Agreement effective June 30, 1994, as amended from time to time.

4.2.4 To determine the amount of compensation due to Carrier for interconnection facilities with two-way trunking for the transport of Local Traffic originating on AT&T's network and terminating on Carrier's network, Carrier will utilize the prior month's undisputed Local Traffic usage billed by AT&T and Carrier to develop the percent of AT&T originated Local Traffic.

4.2.5 AT&T will bill Carrier for the entire cost of the facility. Carrier will then apply the AT&T originated percent against the Local Traffic portion of the two-way interconnection facility charges billed by AT&T to Carrier. Carrier will invoice AT&T on a monthly basis the proportionate cost for the facilities utilized by AT&T.

4.2.6 Carrier will bear the cost for two-way interconnection facilities utilized for the delivery and receipt of Transit Traffic.

4.3 **Billing Charges**

4.3.1 The charges for Local Interconnection shall be billed monthly and payment for services provided is due on or before the next bill date.

4.3.2 Charges for terminating traffic will be based upon the actual conversation minutes of use (MOUs) measured from receipt of answer supervision to receipt of disconnect supervision, with such time accumulated at the end of the billing period and rounded up to the next whole minute.

4.4 **Billing Disputes**

4.4.1 Billing disputes shall be handled pursuant to the terms of this Section.

4.4.2 Each Party agrees to notify the other Party in writing upon the discovery of a billing dispute. Notification of disputed charges must be provided within one (1) year from the time the charge was billed; previously undisputed charges more than one (1) year old shall not be disputed by either Party. In the event of a billing dispute, the Parties will endeavor to resolve the dispute within sixty (60) calendar days of the notification date. If the Parties are unable within the sixty (60) day period to reach resolution, then the aggrieved Parties may pursue dispute resolution in accordance with the terms of this Agreement.

4.4.3 For purposes of this Section, a billing dispute means a dispute of a specific amount of money actually billed by either Party. The dispute must be clearly explained by the disputing Party and supported by written documentation, which clearly shows the basis for disputing charges. A billing dispute will not include the refusal to pay all or part of a bill or bills when no written documentation is provided to support the dispute, nor shall a billing dispute include the refusal to pay other amounts owed by the billed Party until the dispute is resolved. Claims by the billed Party for damages of any kind will not be considered a billing dispute for purposes

of this Section. Once the billing dispute is resolved, the disputing Party will make immediate payment of any of the disputed amount owed to the billing Party or the billing Party shall have the right to pursue normal treatment procedures. Any credits due to the disputing Party pursuant to the billing dispute will be applied to the disputing Party's account by the billing Party immediately upon resolution of the dispute.

4.4.4 If a Party disputes a charge and does not pay such charge by the payment due date, or if a payment or any portion of a payment is received by either Party after the payment due date, or if a payment or any portion of a payment is received in funds that are not immediately available to the other Party, then a late payment charge shall be assessed. The Parties shall assess interest on previously assessed late payment charges only in a state where it has the authority pursuant to its tariffs.

4.4.5 **Late Payment Charges**

4.4.6 Late payment charges shall be the lower of 1.5% per month or such other percent as specified by an appropriate state regulatory agency or required by law. For bills rendered by either Party for payment, the late payment charge for both Parties shall be applied any portion of the payment not received by the billing Party on or before the payment due date.

4.5 **Unbilled Charges**

4.5.1 All charges under this Agreement shall be billed within one (1) year from the time the charge was incurred; previously unbilled charges more than one (1) year old shall not be billed by either Party.

5 **CMRS Non-Local Traffic Interconnection and Compensation**

5.1 For terminating its Non-Local Traffic on the other Party's network, Carrier will pay either the access charges described in paragraph (B) hereunder or the transit charges described in paragraph (D) hereunder, as appropriate.

5.2 For terminating its intrastate or interstate interMTA Non-Local Traffic, Carrier shall pay intrastate or interstate, as appropriate, switched network access service rate elements on a per minute of use basis, which are set out in AT&T's intrastate Access Services Tariff or AT&T's F.C.C. No. 1 Tariff as those tariffs may be amended from time to time during the term of this Agreement.

5.3 AT&T supports the industry standard for the population of the Jurisdictional Information Parameter (JIP) in the call record for all Carrier originated intraMTA and interMTA traffic as set forth in ATIS' Network Interconnection Interoperability Forum reference document ATIS-0300011. For all traffic measurements AT&T will use JIP as the preferred method of call classification impacting usage billing to Carrier. If Carrier fails to populate JIP in accordance with the industry standard, originating NPA/NXX (calling party) will be used to classify interMTA-Interstate and interMTA-Intrastate for usage billing to Carrier.

5.4 If Non-Local Traffic originated by Carrier is delivered by AT&T for termination to the network of a Third Party Carrier, then AT&T will bill Carrier and Carrier shall pay a $.002 per minute transit charge for such

Transit Traffic (Transit Charge) from the effective date of this Agreement through June 29, 2010 increasing to $.003 on June 30, 2010 in addition to any charges that AT&T may be obligated to pay to the Third Party Carrier (Third Party Termination Charges). Third Party Termination Charges may change during the term of this Agreement, and the appropriate rate shall be the rate in effect when the traffic is terminated. AT&T shall not deliver Transit Traffic to Carrier for termination to a Third Party Carrier and, therefore, Carrier shall not bill AT&T any transit charges. Transit Traffic transiting AT&T's network to Carrier is not Local Traffic and Carrier shall not bill AT&T for Transit Traffic transiting AT&T's network. In addition, Traffic received by AT&T from an interexchange carrier for delivery to Carrier is not Local Traffic and Carrier shall not bill AT&T for such traffic. Except for Type 1 originated Transit Traffic, Carrier shall deliver its originated Transit Traffic to a AT&T tandem and not to a AT&T end office.

5.5 Where technically possible, AT&T shall periodically measure actual traffic measurements and shall apply such measurements to classify and bill traffic in each of the categories shown in subsection 5.6 below. AT&T may conduct periodic reviews of Carriers' actual traffic measurements and shall subsequently update the percentages for the aforementioned categories accordingly.

5.6 For Carriers that have not exchanged traffic with AT&T under a previous CMRS interconnection agreement or for traffic categories that are not technically feasible to measure, the associated default traffic classification percentage's set forth in this subsection will be used until such time actual traffic pattern's have been measured:

Carrier originated traffic to AT&T
- Local Traffic - 60%
- Non-Local InterMTA InterState Traffic- 3%
- Non-Local InterMTA IntraState Traffic- 3%
- Non-Local Transit Only Traffic- 27.2%
- Non-Local Transit Plus Third Party Termination Traffic – 6.8%

AT&T originated traffic to Carrier Local Traffic - 100%

5.7 For Carriers that have elected to exchange traffic with AT&T on Type 1 facilities only, the Parties may agree upon a surrogate method of classifying and billing such traffic, taking into consideration territory served (e.g., MTA boundaries, LATA boundaries and state boundaries) and traffic routing of the Parties, and such method shall replace the default percentages set forth above.

6 CMRS Access to 911/E911 Emergency Network

6.1 AT&T and Carrier recognize that 911 and E911 services were designed and implemented primarily as methods of providing emergency services to fixed location subscribers. While AT&T and Carrier recognize the need to

provide "911-like" service to mobile subscribers, both Parties recognize that current technological restrictions prevent an exact duplication of the services provided to fixed location customers. AT&T will route "911-like" calls received from Carrier to the emergency agency designated by Carrier for such calls. Carrier will provide the information necessary to AT&T so that each call may be properly routed and contain as much pertinent information as is technically feasible.

6.2 AT&T and Carrier recognize that the technology and regulatory requirements for the provision of "911-like" service by CMRS carriers are evolving and agree to modify or supplement the foregoing in order to incorporate industry accepted or regulatory mandated technical improvements to comply with applicable regulatory requirements.

7. **CMRS Access to Signaling and Signaling Databases**

7.1 SS7 Connectivity Provided by AT&T. AT&T will offer to Carrier use of its signaling network and signaling databases at AT&T's published tariffed rates. Signaling functionality will be available with both A-link and B-link connectivity.

7.2 Where interconnection is provided by AT&T via B-link connections, charges for the SS7 interconnection elements are as follows: 1) Port Charge - AT&T shall not bill an STP port charge nor shall AT&T pay a port charge; 2) SS7 Network Usage - AT&T shall bill its tariffed usage charge and shall pay usage billed by the Carrier at rates not to exceed those charged by AT&T; 3) SS7 Link - AT&T will bill its tariffed charges for only two links of each quad ordered. Application of these charges in this manner is designed to reflect the reciprocal use of the Parties' signaling networks. Where interconnection is via A-link connections, charges for the SS7 interconnection elements are as follows: 1) Port Charge - AT&T shall bill its tariffed STP port charge but shall not pay a termination charge at the Carrier's end office; 2) SS7 Network Usage - AT&T shall bill its tariffed usage charge but shall not pay for any usage; 3) SS7 Link - AT&T shall bill its tariffed charges for each link in the A-link pair but shall not pay the Carrier for any portion of those links.

7.3 SS7 Connectivity Through a Third Party Provider. A Carrier may obtain SS7 signaling from a Third-Party Provider of SS7 Signaling, for connecting to AT&T's SS7 systems. Such connections shall meet generally accepted industry technical standards (i.e., Telcordia's GR-246 CORE, Specifications of Signaling System Number 7). In such instances, each Party is responsible for its own SS7 signaling therefore, neither Party will bill the other charges associated with SS7 signaling messages, connections and terminations.

8. **CMRS Network Design and Management**

8.1 The Parties will work cooperatively to install and maintain reliable interconnected telecommunications networks, including but not limited to, maintenance contact numbers and escalation procedures. AT&T will provide public notice of changes in the information necessary for the transmission and routing of services using its local exchange facilities or networks, as well as of any other changes that would affect the interoperability of those facilities and networks.

8.2 The interconnection of all networks will be based upon accepted industry/national guidelines for transmission standards and traffic blocking criteria.

8.3 The Parties will work cooperatively to apply sound network management principles by invoking appropriate network management controls to alleviate or prevent network congestion.

8.4 Network Congestion - When AT&T notifies carrier that capacity issues at any AT&T tandem, including but not limited to port capacity and processing capacity, require Carrier to add interconnection facilities to additional AT&T tandems or to AT&T end offices, the Parties agree to joint planning sessions through which the Parties will develop mutually acceptable plan(s) to alleviate such tandem capacity problems. Such mutually agreed to plans may include AT&T providing the necessary transport facilities past the tandem for Carrier to provide Type 2B interconnection and waving the charges for such facilities from the tandem to the end office provided however that Carrier agrees to compensate AT&T for the necessary interconnections facilities to the POI.

8.5 Tandem Traffic Volume – Where multiple AT&T tandems exist within a LATA, and where either Party has the capability to measure the amount of traffic between Carrier's switch and an interconnected AT&T tandem, then in the event that the amount of traffic delivered to end offices that sub-tend another specific AT&T tandem in the same LATA exceeds two DS1's (624,000 minutes of use) level of traffic per month for two consecutive month's, then Carrier shall install and retain interconnection trunks to such tandem, in addition to the existing AT&T tandem interconnection(s).

8.6 End Office Traffic Volume – Where either Party has the capability to measure the amount of traffic between Carrier's switch and a specific AT&T end office, in the event that the amount of traffic Carrier delivers to that end office exceeds one DS3's (6 million minutes of use) level of traffic per month for two consecutive months, then Carrier shall install and retain Type 2B interconnection trunks to such end office.

8.7 Interconnection reconfigurations will have to be considered individually as to the application of a charge. Notwithstanding the foregoing, the Parties do intend to charge non-recurring fees for any additions to, or added capacity to, any facility or trunk purchased. Parties who initiate SS7 STP changes may be charged authorized non-recurring fees from the appropriate tariffs.

8.8 The Parties will provide Common Channel Signaling (CCS) information to one another, where available and technically feasible, in conjunction with all traffic in order to enable full interoperability of CLASS features and functions except for call return. All CCS signaling parameters will be provided, including automatic number identification (ANI), originating line information (OLI) calling party category, charge number, etc. All privacy indicators will be honored, and the Parties agree to cooperate on the exchange of Transactional Capabilities Application Part (TCAP) messages to facilitate full interoperability of CCS-based features between the respective networks.

8.9 For network expansion, the Parties will review engineering requirements on a periodic basis and establish forecasts for trunk utilization as required by this Agreement. New trunk groups will be implemented as stated by engineering requirements for both Parties.

8.10 The Parties will provide each other with the proper call information, including all proper translations for routing between networks and any information necessary for billing where AT&T provides recording capabilities. This exchange of information is required to enable each Party to bill properly.

9. CMRS Auditing Procedures

9.1 Upon thirty (30) days written notice, each Party must provide the other the ability and opportunity to conduct an annual audit to ensure the proper billing of traffic between the Parties. The Parties will retain billing information for a minimum of nine months from which the actual percentages of use, as described above, can be ascertained. The audit shall be accomplished during normal business hours at an office designated by the Party being audited. Audit requests shall not be submitted more frequently than one (1) time per calendar year. Audits shall be performed by a mutually acceptable independent auditor paid for by the Party requesting the audit. The applicable percentages shall be adjusted based upon the audit results and shall apply to the usage for the quarter the audit was completed, the usage for the quarter prior to the completion of the audit, and to the usage for the two quarters following the completion of the audit.

10. CMRS Meet Point Billing Option

10.1 Meet Point Billing (MPB), as supported by Multiple Exchange Carrier Access Billing (MECAB) guidelines, shall mean the exchange of billing data relating to jointly provided switched access calls and Transit Traffic at the tandem level but shall only apply to the following Third Party Carriers – 1) Interexchange Carriers (IXC), 2) Rural Incumbent Local Exchange Carriers (R-ILEC, ICO, or ITC), 3) Competitive Local Exchange Carriers (CLEC), or 4) Commercial Mobile Radio Services (CMRS) Providers uniquely identified in the Electronic Message Interface (EMI) 1101 call records in either the Carrier Identification Code (CIC) or

Operating Company Number (OCN) fields which are, respectively, fields 45 thru 49 and 167 thru 170 of the EMI record.

10.2 For purposes of MPB, any reference to Third Party Carriers shall include only those entities set forth in the preceding paragraph. MECAB refers to the document prepared by the Billing Committee of the Ordering and Billing Forum (OBF), which functions under the auspices of the Carrier Liaison Committee (CLC) of the Alliance for Telecommunications Industry Solutions (ATIS). The MECAB document, published by Telcordia as Special Report SR-BDS-000983, contains the recommended guidelines for the billing of Switched Access Traffic and Transit Traffic at the tandem level provided by two or more telecommunications carriers. Subject to Carrier providing all necessary information, AT&T agrees to participate in MPB for Switched Access Traffic (as described in AT&T's Tariffs) and Transit Traffic when both the originating and terminating parties participate in MPB with AT&T. AT&T shall pass Electronic Message Interface (EMI) 1101 call records to Carrier at no charge. Depending on the delivery medium selected by Carrier, appropriate charges for that delivery medium will be applied. Notwithstanding the foregoing, for purposes of MPB, where either or both of the originating or terminating carrier of Transit Traffic does not have MPB capability or refuses to participate in MPB with respect to such Transit Traffic, Section 5 will apply and this Section shall not apply to Carrier with respect to such Third Party Carrier. In such event, Carrier shall be responsible for all costs and charges incurred by AT&T under this Section.

10.3 Information required from carriers participating in MPB with AT&T includes, but is not limited to:

(i) Regional Accounting Office code (RAO)
(ii) Operating Company Number (OCN) per state for each entity to be billed. If an OCN is not available for each billed entity, AT&T will only render a bill to Carrier.
(iii) a unique Access Carrier Name Abbreviation (ACNA)
(iv) Percent Interstate Usage
(v) Percent Local Usage
(vi) 800 Service Percent Interstate Usage or default of 50%
(vii) Billing Interconnection Percentage
(viii) Screening Telephone Number (STN) for each interconnection trunk group from Carrier's dedicated NXX that sub-tends a BST Tandem in the interconnected LATA and is within the same Numbering Plan Area (NPA) as the exchange where the Carriers AT&T CMRS Type 2A trunk interconnection exists.

10.4 A default Billing Interconnection Percentage (BIP) of **0% AT&T** and **100% Carrier** will be used if Carrier does not file with NECA to establish a BIP other than default. Carrier must support MPB for all Switched Access Traffic and Transit Traffic, at the tandem level, in

accordance with Mechanized MECAB guidelines. The Parties acknowledge that the exchange of 1150 records will not be required.

10.5 MPB will be provided for Switched Access Traffic and Transit Traffic at the tandem level only. NPA/NXX codes for MPB must be associated with a point of interconnection (POI) that physically resides within AT&T's franchised service area, has a Common Language Location Identification (CLLI) that sub-tends a AT&T tandem and has a rate center that sub-tends the same AT&T tandem. Parties utilizing MPB must subscribe to tandem level interconnections with AT&T and must deliver all Transit Traffic to AT&T over such tandem level interconnections. Additionally, exchange of records will necessitate both the originating and terminating networks to subscribe to dedicated NXX codes, which can be identified as belonging to the originating and terminating network. NPA/NXX codes are presented in the Local Exchange Routing Guide (LERG) in association with a specific switch CLLI. Under national programming rules associated with Carrier Access Billing Systems (CABS), each CLLI is associated with a single rate center. Additionally, (i) if the Carrier has Type 2A and Non-Type 2A NPA/NXX codes associated with a single CLLI or, (ii) if the Type 2A NPA/NXX code or CLLI home on a non-AT&T SHA "00" tandem or are in a disassociated LATA, then those NPA/NXX codes and CLLI codes will not be included in MPB, and Switched Access Traffic and Transit Traffic associated with those NPA/NXX codes will continue to be billed in accordance with the provisions of Section 5. When converting to MPB, if Carrier has NPA/NXX codes with more than a single rate center terminating to a given CLLI, Carrier must provide AT&T with information stating which AT&T rate center will be associated with NPA/NXX. If Carrier does not provide the rate center, AT&T will determine the AT&T rate center that will be applied to the CLLI. MPB is not available when the tandem at which the Parties have interconnected does not have the capability to measure actual traffic.

10.6 In a MPB environment, when Carrier utilizes services provided by AT&T that are necessary to deliver certain types of calls (e.g. Local Number Portability queries and 800 Data Base queries), Carrier will be billed applicable charges as set forth in AT&T's federal or state access tariffs, as appropriate. In the alternative, Carrier may perform the appropriate database queries prior to delivery of such traffic to AT&T.

10.7 Participation in MPB is outside the reciprocal compensation requirements of this Agreement. Under MPB, Carrier will compensate AT&T at the rate set forth in 16 of this Agreement for Carrier originated Transit Traffic. Meet Point Billing to IXCs for jointly provided switched access traffic will be consistent with the most current MECAB billing guidelines.

10.8 Exchange of records will begin no earlier than ninety days from the later of the date the contract is signed or the date that all necessary information as defined above is provided. Once Carrier sets up MPB arrangements for Transit Traffic, Transit Traffic will be subject to only the per minute

Transit Charge (or such other rate ordered by the state), and Third Party Termination Charges shall not apply. Notwithstanding the foregoing, in the event Carrier utilizes AT&T's network to deliver Transit Traffic to a Third Party Carrier that does not accept traffic from AT&T as Transit Traffic and has not, or will not, agree to MPB arrangements with Carrier for such Transit Traffic, AT&T shall have the right to bill and collect from Carrier any amounts AT&T pays to the Third Party Carrier for termination of Carrier's Transit Traffic. MPB as described assumes Carrier will enter into interconnection or traffic exchange agreements with Third Party Carriers who terminate traffic originated by Carrier. Carrier will be liable to AT&T for any charges, costs and fees AT&T may incur for delivering Carrier's Transit Traffic.

10.9 Notwithstanding anything to the contrary, to the extent Carrier and AT&T are parties to any settlement agreement relating to the exchange of Transit Traffic from Carrier to any independent telephone company, the Parties shall comply with the compensation provisions of such settlement agreement during the term thereof, as well as with any provisions of this Agreement that are not in conflict with such settlement agreement. Upon expiration of any such settlement agreement, the terms of this Section and the compensation payable hereunder shall control.

ATTACHMENT A

Network Managers	Market Name	State	Call Sign

Example of CMRS Wireless Ventures License Subsidiary I, L.L.C.	*Biloxi-Gulfport-Pascagoula, MS*	*MS*	*KNLF123*
Example of CMRS Wireless Ventures License Subsidiary I, L.L.C.	*Fort Walton Beach, FL*	*FL*	*KNLF456*

Note: For Corporate Entities only the name is required.

Attachment 3B

Network Interconnection - CLEC

TABLE OF CONTENTS

1 CLEC General 3

2 CLEC Definitions: (For the purpose of this Attachment) 3

3 CLEC Network Interconnection 5

4 CLEC Interconnection Trunk Group Architectures 7

5 CLEC Network Design And Management For Interconnection 13

6 CLEC Forecasting for Trunk Provisioning 14

7 CLEC Local Dialing Parity 16

8 CLEC Interconnection Compensation 16

9 CLEC Ordering Charges 22

10 CLEC Basic 911 and E911 Interconnection 22

11 CLEC SS7 Network Interconnection 23

Rates	**Exhibit A**
Basic Architecture	**Exhibit B**
One Way Architecture	**Exhibit C**
Two Way Architecture	**Exhibit D**
Supergroup Architecture	**Exhibit E**

NETWORK INTERCONNECTION - CLEC

1 CLEC General

1.1 The Parties shall provide interconnection with each other's networks for the transmission and routing of telephone exchange service (Local Traffic), ISP-Bound Traffic, and exchange access (Switched Access Traffic) on the following terms:

2 CLEC Definitions: (For the purpose of this Attachment)

For purposes of this attachment only, the following terms shall have the definitions set forth below:

2.1 **Automatic Location Identification (ALI)** is a feature by which the address associated with the calling party's telephone number (ANI) is forwarded to the PSAP for display. Access to the ALI database is described in Attachment 2 to this Agreement.

2.2 **Automatic Number Identification (ANI)** corresponds to the seven-digit telephone number assigned by the serving local exchange carrier.

2.3 **AT&T Trunk Group** is defined as a one-way trunk group carrying AT&T originated traffic to be terminated by Sprint.

2.4 **911 Service** is as described in this Attachment.

2.5 **Call Termination** has the meaning set forth for "termination" in 47 C.F.R. § 51.701(d).

2.6 **Call Transport** has the meaning set forth for "transport" in 47 C.F.R. § 51.701(c).

2.7 **Call Transport and Termination** is used collectively to mean the switching and transport functions from the Interconnection Point to the last point of switching.

2.8 **Common (Shared) Transport** is defined as the transport of the originating Party's traffic by the terminating Party over the terminating Party's common (shared) facilities between (1) the terminating Party's tandem switch and end office switch, (2) between the terminating Party's tandem switches, and/or (3) between the terminating Party's host and remote end office switches. All switches referred herein must be entered into the The Telcordia® LERG™ Routing Guide (LERG).

2.9 **Dedicated Interoffice Facility** is defined as a switch transport facility between a Party's Serving Wire Center and the first point of switching within the LATA on the other Party's network.

2.10 **End Office Switching** is defined as the function that establishes a communications path between the trunk side and line side of the End Office switch.

2.11 **Fiber Meet** is an interconnection arrangement whereby the Parties physically interconnect their networks via an optical fiber interface at which one Party's facilities, provisioning, and maintenance responsibility begins and the other Party's responsibility ends.

2.12 **Final Trunk Group** is defined as the last choice trunk group between two (2) switches for which there is no alternate route.

2.13 **Integrated Services Digital Network User Part (ISUP)** is a message protocol to support call set-up and release for interoffice voice connections over SS7 signaling.

2.14 **Interconnection Point (IP)** is the physical telecommunications equipment interface that interconnects the networks of AT&T and Sprint for the exchange of telecommunications traffic between the Parties.

2.15 **IntraLATA Toll Traffic** is as defined in this Attachment.

2.16 **ISP-Bound Traffic** is as defined in this Attachment.

2.17 **Local Channel** is defined as a switched transport facility between a Party's Interconnection Point and the IP's Serving Wire Center.

2.18 **Local Traffic** is as defined in this Attachment.

2.19 **Public Safety Answering Point (PSAP)** is the answering location for 911 calls.

2.20 **Selective Routing (SR)** is a standard feature that routes an E911 call from the tandem to the designated PSAP based upon the address of the ANI of the calling party.

2.21 **Serving Wire Center (SWC)** is defined as the wire center owned by one Party from which the other Party would normally obtain dial tone for its IP.

2.22 **Signaling System 7 (SS7)/Common Channel Signaling 7 (CCS7)** is an out-of-band signaling system used to provide basic routing information, call set-up and other call termination functions. Signaling is removed from the voice channel and put on a separate data network.

2.23 **Tandem Switching** is defined as the function that establishes a communications path between two switching offices through a third switching office through the provision of trunk side to trunk side switching.

2.24 **Transit Traffic** is traffic originating on Sprint's network that is switched and/or transported by AT&T and delivered to a third party's network, or traffic originating on a third party's network that is switched and/or transported by AT&T and delivered to Sprint's network.

3 CLEC Network Interconnection

3.1 This Attachment pertains only to the provision of network interconnection where Sprint owns, leases from a third party or otherwise provides its own switch(es).

3.2 Network interconnection may be provided by the Parties at any technically feasible point within AT&T's network. Requests to AT&T for interconnection at points other than as set forth in this Attachment may be made through the Bona Fide Request/New Business Request (BFR/NBR) Process set forth in Attachment 11.

3.2.1 Each Party is responsible for providing, engineering and maintaining the network on its side of the IP. The IP must be located within AT&T's serving territory in the LATA in which traffic is originating. The IP determines the point at which the originating Party shall pay the terminating Party for the Call Transport and Termination of Local Traffic, ISP-Bound Traffic and IntraLATA Toll Traffic. In selecting the IP, both Parties will act in good faith and select the point that is most efficient for both Parties.

3.2.2 Pursuant to the provisions of this Attachment, the location of the initial IP in a given LATA shall be established by mutual agreement of the Parties. Subject to the requirements for installing additional IPs, as set forth below, any IPs existing prior to the Effective Date of the Agreement will be accepted as initial IPs and will not require re-grooming. When the Parties mutually agree to utilize two-way interconnection trunk groups for the exchange of Local Traffic, ISP-Bound Traffic and IntraLATA Toll Traffic between each other, the Parties shall mutually agree to the location of IP(s). If the Parties are unable to agree to a mutual initial IP, each Party, as originating Party, shall establish a single IP in the LATA for the delivery of its originated Local Traffic, ISP-Bound Traffic and IntraLATA Toll Traffic to the other Party for Call Transport and Termination by the terminating Party.

3.2.3 Additional IP(s) in a LATA may be established by mutual agreement of the Parties. Notwithstanding the foregoing, additional IP(s) in a particular LATA shall be established, at the request of either Party, when the Local Traffic and ISP-Bound Traffic exceeds eight point nine (8.9) million minutes per month for three (3) consecutive months at the proposed location of the additional IP. AT&T will not request the establishment of an IP in an AT&T Central Office where physical or virtual collocation space is not available or where AT&T fiber connectivity is not available. When the Parties agree to utilize two-way interconnection trunk groups for the exchange of Local Traffic, ISP-Bound Traffic and IntraLATA Toll Traffic the Parties must agree to the location of the IP(s).

3.3 <u>Interconnection via Dedicated Facilities</u>

3.3.1 <u>Local Channel Facilities.</u> As part of Call Transport and Termination, the originating Party may obtain Local Channel facilities from the terminating Party. The percentage of Local Channel facilities utilized for Local Traffic and ISP-Bound Traffic shall be determined based upon the application of the Percent

Local Facility (PLF) Factor as set forth in this Attachment. The charges applied to the percentage of Local Channel facilities used for Local Traffic and ISP-Bound Traffic as determined by the PLF factor are as set forth in Exhibit A. The remaining percentage of Local Channel facilities shall be billed at AT&T's intrastate Access Services Tariff or BellSouth's FCC No. 1 Tariff rates.

3.3.2 Dedicated Interoffice Facilities. As a part of Call Transport and Termination, the originating Party may obtain Dedicated Interoffice Facilities from the terminating Party. The percentage of Dedicated Interoffice Facilities utilized for Local Traffic and ISP-Bound Traffic shall be determined based upon the application of the PLF factor as set forth in this Attachment. The charges applied to the percentage of the Dedicated Interoffice Facilities used for Local Traffic and ISP-Bound Traffic as determined by the PLF factor are as set forth in Exhibit A. The remaining percentage of the Dedicated Interoffice Facilities shall be billed at AT&T's intrastate Access Services Tariff or BellSouth's FCC No. 1 Tariff rates.

3.4 Fiber Meet. Notwithstanding Sections 3.2.1, 3.2.2, and 3.2.3 above, if Sprint elects to establish interconnection with AT&T pursuant to a Fiber Meet Local Channel, Sprint and AT&T shall jointly engineer, operate and maintain a Synchronous Optical Network (SONET) transmission system by which they shall interconnect their transmission and routing of Local Traffic and ISP-Bound Traffic via a Local Channel at either the DS1 or DS3 level. The Parties shall work jointly to determine the specific transmission system. However, Sprint's SONET transmission system must be compatible with AT&T's equipment, and the Data Communications Channel (DCC) must be turned off.

3.4.1 Each Party, at its own expense, shall procure, install and maintain the agreed upon SONET transmission system in its network.

3.4.2 The Parties shall agree to a Fiber Meet point between the AT&T Serving Wire Center and the Sprint Serving Wire Center. The Parties shall deliver their fiber optic facilities to the Fiber Meet point with sufficient spare length to reach the fusion splice point for the Fiber Meet point. AT&T shall, at its own expense, provide and maintain the fusion splice point for the Fiber Meet. A building type CLLI code will be established for each Fiber Meet point. All orders for interconnection facilities from the Fiber Meet point shall indicate the Fiber Meet point as the originating point for the facility.

3.4.3 Upon verbal request by Sprint, AT&T shall allow Sprint access to the fusion splice point for the Fiber Meet point for maintenance purposes on Sprint's side of the Fiber Meet point.

3.4.4 Neither Party shall charge the other for its Local Channel portion of the Fiber Meet facility used exclusively for Local Traffic and ISP-Bound Traffic. The percentage of Local Channel facilities utilized for Local Traffic and ISP-Bound Traffic shall be determined based upon the application of the PLF factor as set forth in this Attachment. The charges applied to the percentage of Local Channel facilities

used for Local Traffic and ISP-Bound Traffic as determined by the PLF factor are as set forth in Exhibit A. The remaining percentage of Local Channel facilities shall be billed at AT&T's applicable access tariff rates. Charges for switched and special access services shall be billed in accordance with the applicable AT&T intrastate Access Services Tariff and or BellSouth's FCC No. 1 Tariff.

4 CLEC Interconnection Trunk Group Architectures

4.1 AT&T and Sprint shall establish interconnecting trunk groups and trunk group configurations between networks, including the use of one-way or two-way trunks in accordance with the following provisions set forth in this Attachment**.** For trunking purposes, traffic will be routed based on the digits dialed by the originating end user and in accordance with the LERG.

4.2 Sprint shall establish an interconnection trunk group(s) to at least one (1) AT&T access tandem within the LATA for the delivery of Sprint's originated Local Traffic, ISP-Bound Traffic and IntraLATA Toll Traffic and for the receipt and delivery of Transit Traffic. To the extent Sprint desires to deliver Local Traffic, ISP-Bound Traffic, IntraLATA Toll Traffic and/or Transit Traffic to AT&T access tandems within the LATA, other than the tandems(s) to which Sprint has established interconnection trunk groups, Sprint shall pay the appropriate rates for Multiple Tandem Access, as described in this Attachment.

4.2.1 Notwithstanding the forgoing, Sprint shall establish an interconnection trunk group(s) to all AT&T access and local tandems in the LATA where Sprint has homed (i.e., assigned) its NPA/NXXs. Sprint shall home its NPA/NXXs on the AT&T tandems that serve the exchange rate center areas to which the NPA/NXXs are assigned. The specified exchange rate center assigned to each AT&T tandem is defined in the LERG. Sprint shall enter its NPA/NXX access and/or local tandem homing arrangements into the LERG.

4.3 Switched access traffic will be delivered to and from IXCs based on Sprint's NXX access tandem homing arrangement as specified by Sprint in the LERG.

4.4 Any Sprint interconnection request that (1) deviates from the interconnection trunk group architectures as described in this Agreement, (2) affects traffic delivered to Sprint from an AT&T switch, and (3) requires special AT&T switch translations and other network modifications will require Sprint to submit a BFR/NBR via the BFR/NBR Process as set forth in Attachment 11.

4.5 Recurring and nonrecurring rates associated with interconnecting trunk groups between AT&T and Sprint are set forth in Exhibit A. To the extent a rate associated with the interconnecting trunk group is not set forth in Exhibit A, the rate shall be as set forth in the appropriate AT&T intrastate Access Services Tariff or BellSouth's FCC No. 1 Tariff.

4.6 For two-way trunk groups that carry only both Parties' Local Traffic, the Parties shall be compensated at fifty percent (50%) of the nonrecurring and recurring rates for dedicated trunks and DS1 facilities. Sprint shall be responsible for ordering and paying for any two-way trunks carrying Transit Traffic.

4.7 All trunk groups will be provisioned as SS7 capable where technically feasible. If SS7 is not technically feasible, multi-frequency (MF) protocol signaling shall be used.

4.8 In cases where Sprint is also an IXC, the IXC's Feature Group D (FG D) trunk group(s) must remain separate from the local interconnection trunk group(s).

4.9 Each Party shall order interconnection trunks and trunk group including trunk and trunk group augmentations via the Access Service Request (ASR) process. A Firm Order Confirmation (FOC) shall be returned to the ordering Party, after receipt of a valid, error free ASR, within the timeframes set forth in each state's applicable Performance Measures. Notwithstanding the foregoing, blocking situations and projects shall be managed through AT&T's Carrier Interconnection Switching Center (CISC) Project Management Group and Sprint's equivalent trunking group, and FOCs for such orders shall be returned in the timeframes applicable to the project. A project is defined as (1) a new trunk group or (2) a request for more than one hundred ninety-two (192) trunks on a single or multiple group(s) in a given AT&T local calling area.

4.10 <u>Interconnection Trunk Groups for Exchange of Local Traffic and Transit Traffic</u>

4.10.1 Upon mutual agreement of the Parties in a joint planning meeting, the Parties shall exchange Local Traffic on two-way interconnection trunk group(s) with the quantity of trunks being mutually determined and the provisioning being jointly coordinated. Furthermore, the Parties shall agree upon the IP(s) for two-way interconnection trunk groups transporting both Parties' Local Traffic, ISP-Bound Traffic and IntraLATA Toll Traffic. Sprint shall order such two-way trunks via the ASR process. AT&T will use the Trunk Group Service Request (TGSR) to request changes in trunking. Furthermore, the Parties shall jointly review trunk performance and forecasts in accordance with Section 6 below. The Parties' use of two-way interconnection trunk groups for the transport of Local Traffic, ISP-Bound Traffic and IntraLATA Toll Traffic between the Parties does not preclude either Party from establishing additional one-way interconnection trunks for the delivery of its originated Local Traffic, ISP-Bound Traffic and IntraLATA Toll Traffic to the other Party. Other trunk groups for operator services, directory assistance and intercept must be established pursuant to AT&T's intrastate Access Services Tariff and/or BellSouth's FCC No. 1 Tariff.

4.10.2 <u>AT&T Access Tandem Interconnection.</u> AT&T Access Tandem interconnection at a single Access Tandem provides access to those End Offices subtending that access tandem (Intratandem Access). Access Tandem interconnection is available for any of the following access tandem architectures:

4.10.2.1 Basic Architecture. In the basic architecture, Sprint's originating Local Traffic, ISP-Bound Traffic and IntraLATA Toll Traffic and originating and terminating Transit Traffic is transported on a single two-way trunk group between Sprint and AT&T Access Tandem(s) within a LATA to provide Intratandem Access. This trunk group carries Transit Traffic between Sprint and ICOs, IXCs, other CLECs, CMRS providers that have a Meet Point Billing arrangement with AT&T, and other network providers with which Sprint desires to exchange traffic. This trunk group also carries Sprint originated Transit Traffic transiting a single AT&T Access Tandem destined to third party tandems such as an ICO tandem or other CLEC tandem. AT&T originated Local Traffic, ISP-Bound Traffic and IntraLATA Toll Traffic is transported on a separate single one-way trunk group terminating to Sprint. The LERG contains current routing and tandem serving arrangements. The basic Architecture is illustrated in Exhibit B.

4.10.2.2 One-Way Trunk Group Architecture. In one-way trunk group architecture, the Parties interconnect using three (3) separate trunk groups. A one-way trunk group provides Intratandem Access for Sprint-originated Local Traffic, ISP-Bound Traffic and IntraLATA Toll Traffic destined for AT&T end users. A second one-way trunk group carries AT&T-originated Local Traffic, ISP-Bound Traffic and IntraLATA Toll Traffic destined for Sprint end users. A two-way trunk group provides Intratandem Access for Sprint's originating and terminating Transit Traffic. This trunk group carries Transit Traffic between Sprint and ICOs, IXCs, other CLECs, CMRS providers that have a Meet Point Billing arrangement with AT&T, and other network providers with which Sprint exchanges traffic. This trunk group also carries Sprint originated Transit Traffic transiting a single AT&T Access Tandem destined to third party tandems such as an ICO tandem or other CLEC tandem. AT&T originated Local Traffic, ISP-Bound Traffic and IntraLATA Toll Traffic is transported on a separate single one-way trunk group terminating to Sprint. The LERG contains current routing and tandem serving arrangements. The one-way trunk group architecture is illustrated in Exhibit C.

4.10.2.3 Two-Way Trunk Group Architecture. The two-way trunk group Architecture establishes one (1) two-way trunk group to provide Intratandem Access for the exchange of Local Traffic, ISP-Bound Traffic and IntraLATA Toll Traffic between Sprint and AT&T. In addition, a separate two-way transit trunk group must be established for Sprint's originating and terminating Transit Traffic. This trunk group carries Transit Traffic between Sprint and ICOs, IXCs, other CLECs, CMRS providers that have a Meet Point Billing arrangement with AT&T, and other network providers with which Sprint exchanges traffic. This trunk group also carries Sprint originated Transit Traffic transiting a single AT&T Access Tandem destined to third party tandems such as an ICO tandem or other CLEC tandem. AT&T originated traffic may, in order to prevent or remedy traffic blocking situations, be transported on a separate single one-way trunk group terminating to Sprint. However, where Sprint is responsive in a timely manner to AT&T's transport needs for its originated traffic, AT&T originating traffic will be placed on the two-way Local Traffic trunk group carrying ISP-Bound Traffic and

IntraLATA Toll Traffic. The LERG contains current routing and tandem serving arrangements. The two-way trunk group architecture is illustrated in Exhibit D.

4.10.2.4 Supergroup Architecture. In the supergroup architecture, the Parties' Local Traffic, ISP-Bound Traffic and IntraLATA Toll Traffic and Sprint's Transit Traffic are exchanged on a single two-way trunk group between Sprint and AT&T to provide Intratandem Access to Sprint. This trunk group carries Transit Traffic between Sprint and ICOs, IXCs, other CLECs, CMRS providers that have a Meet Point Billing arrangement with AT&T, and other network providers with which Sprint desires to exchange traffic. This trunk group also carries Sprint originated Transit Traffic transiting a single AT&T Access Tandem destined to third party tandems such as an ICO tandem or other CLEC tandem. AT&T originated traffic may, in order to prevent or remedy traffic blocking situations, be transported on a separate single one-way trunk group terminating to Sprint. However, where Sprint is responsive in a timely manner to AT&T's transport needs for its originated traffic, AT&T originating traffic will be placed on the Supergroup. Other trunk groups for operator services, directory assistance, emergency services and intercept must be established pursuant to the applicable AT&T tariff if service is requested. The LERG contains current routing and tandem serving arrangements. The supergroup architecture is illustrated in Exhibit E.

4.10.2.5 Multiple Tandem Access (MTA) Interconnection

4.10.2.5.1 Where Sprint does not choose access tandem interconnection at every AT&T Access Tandem within a LATA, Sprint must utilize AT&T's MTA interconnection. To utilize MTA Sprint must establish an interconnection trunk group(s) at a minimum of one (1) AT&T Access Tandem within each LATA as required. AT&T will route Sprint's originated Local Traffic, ISP-Bound Traffic and IntraLATA Toll Traffic for LATA wide transport and termination. Sprint must also establish an interconnection trunk group(s) at all AT&T Access Tandems where Sprint NXXs are homed as described in Section 4.2.1 above. If Sprint does not have NXXs homed at any particular AT&T Access Tandem within a LATA and elects not to establish an interconnection trunk group(s) at such AT&T Access Tandem, Sprint can order MTA in each AT&T Access Tandem within the LATA where it does have an interconnection trunk group(s) and AT&T will terminate Sprint's Local Traffic, ISP-Bound Traffic and IntraLATA Toll Traffic to end users served through those AT&T Access Tandems where Sprint does not have an interconnection trunk group(s). MTA shall be provisioned in accordance with AT&T's Ordering Guidelines.

4.10.2.5.2 Sprint may also utilize MTA to route its originated Transit Traffic; provided, however, that MTA may not be utilized to route switched access traffic that transits the AT&T network to an IXC. Switched access traffic originated by or terminated to Sprint will be delivered to and from IXCs based on Sprint's NXX access tandem homing arrangement as specified by Sprint in the LERG.

4.10.2.5.3 Compensation for MTA shall be at the applicable tandem switching and transport charges specified in Exhibit A and shall be billed in addition to any Call Transport and Termination charges.

4.10.2.5.4 To the extent Sprint does not purchase MTA in a LATA served by multiple Access Tandems, Sprint must establish an interconnection trunk group(s) to every Access Tandem in the LATA to serve the entire LATA. To the extent Sprint routes its traffic in such a way that utilizes AT&T's MTA service without properly ordering MTA, Sprint shall pay AT&T the associated MTA charges.

4.10.3 Local Tandem Interconnection

4.10.3.1 Local Tandem Interconnection arrangement allows Sprint to establish an interconnection trunk group(s) at AT&T local tandems for: (1) the delivery of Sprint-originated Local Traffic and ISP-Bound Traffic transported and terminated by AT&T to AT&T End Offices served by those AT&T local tandems, and (2) for local Transit Traffic transported by AT&T for third party network providers who have also established an interconnection trunk group(s) at those AT&T local tandems.

4.10.3.2 When a specified local calling area is served by more than one (1) AT&T local tandem, Sprint must designate a "home" local tandem for each of its assigned NPA/NXXs and establish trunk connections to such local tandems. Additionally, Sprint may choose to establish an interconnection trunk group(s) at the AT&T local tandems where it has no codes homing but is not required to do so. Sprint may deliver Local Traffic and ISP-Bound Traffic to a "home" AT&T local tandem that is destined for other AT&T or third party network provider end offices subtending other AT&T local tandems in the same local calling area where Sprint does not choose to establish an interconnection trunk group(s). It is Sprint's responsibility to enter its own NPA/NXX local tandem homing arrangements into the LERG either directly or via a vendor in order for other third party network providers to determine appropriate traffic routing to Sprint's codes. Likewise, Sprint shall obtain its routing information from the LERG.

4.10.3.3 Notwithstanding establishing an interconnection trunk group(s) to AT&T's local tandems, Sprint must also establish an interconnection trunk group(s) to AT&T Access Tandems within the LATA on which Sprint has NPA/NXXs homed for the delivery of Interexchange Carrier Switched Access and toll traffic, and traffic to Type 2A CMRS connections located at the Access Tandems. AT&T shall not switch SWA traffic through more than one AT&T access tandem. SWA, Type 2A CMRS or toll traffic routed to the local tandem in error will not be backhauled to the AT&T Access Tandem for completion. (Type 2A CMRS interconnection is defined in Section A35 of AT&T's GSST).

4.10.3.4 AT&T's provisioning of Local Tandem Interconnection assumes that Sprint has executed the necessary local interconnection agreements with the other third party network providers subtending those local tandems as required by the Act.

4.10.4 Direct End Office-to-End Office Interconnection

4.10.4.1 Direct End Office-to-End Office one-way or two-way interconnection trunk groups allow for the delivery of a Party's originating Local Traffic, ISP-Bound Traffic and IntraLATA Toll Traffic to the terminating Party on a direct end office-to-end office basis.

4.10.4.2 The Parties shall utilize direct end office-to-end office trunk groups under any one (1) of the following conditions:

4.10.4.2.1 Tandem Exhaust. If a tandem through which the Parties are interconnected is unable to, or is forecasted to be unable to support additional traffic loads for any period of time, the Parties will mutually agree on an end office trunking plan that will alleviate the tandem capacity shortage and ensure completion of traffic between Sprint and AT&T.

4.10.4.2.2 Traffic Volume. To the extent either Party has the capability to measure the amount of traffic between Sprint's switch and an AT&T End Office and where such traffic exceeds or is forecasted to exceed a single DS1 of traffic per month, then the Parties shall install and retain direct end office trunking sufficient to handle such traffic volumes. Either Party will install additional capacity between such points when overflow traffic exceeds or is forecasted to exceed a single DS1 of traffic per month. In the case of one-way trunking, additional trunking shall only be required by the Party whose trunking has achieved the preceding usage threshold.

4.10.4.2.3 Mutual Agreement. The Parties may install direct end office trunking upon mutual agreement in the absence of conditions (1) or (2) above.

4.10.5 Transit Traffic Trunk Group

4.10.5.1 Transit Traffic trunks can either be two-way trunks or two (2) one-way trunks ordered by Sprint to deliver and receive Transit Traffic. Establishing Transit Traffic trunks at AT&T Access and Local Tandems provides Intratandem Access to the third parties also interconnected at those tandems. Sprint shall be responsible for all recurring and nonrecurring charges associated with Transit Traffic trunks and facilities.

4.10.5.2 Toll Free Traffic

4.10.5.2.1 If Sprint chooses AT&T to perform the Service Switching Point (SSP) Function (i.e., handle Toll Free database queries) from AT&T's switches, all Sprint originating Toll Free traffic will be routed over the Transit Traffic Trunk Group and shall be delivered using GR-394 format. Carrier Code "0110" and Circuit Code (to be determined for each LATA) shall be used for all such calls.

4.10.5.2.2 Sprint may choose to perform its own Toll Free database queries from its switch. In such cases, Sprint will determine the nature (local/intraLATA/interLATA) of the Toll Free call (local/IntraLATA/InterLATA) based on the response from the database. If the call is an AT&T local or intraLATA Toll Free call, Sprint will route the post-query local or IntraLATA converted ten (10)-digit local number to AT&T over the local or intraLATA trunk group. If the call is a third party (ICO, IXC, CMRS or other CLEC) local or intraLATA Toll Free call, Sprint will route the post-query local or intraLATA converted ten (10)-digit local number to AT&T over the Transit Traffic Trunk Group and Sprint shall provide to AT&T a Toll Free billing record when appropriate. If the query reveals the call is an interLATA Toll Free call, Sprint will route the post-query interLATA Toll Free call (1) directly from its switch for carriers interconnected with its network or (2) over the Transit Traffic Trunk Group to carriers that are not directly connected to Sprint's network but that are connected to AT&T's Access Tandem.

4.10.5.2.3 All post-query Toll Free calls for which Sprint performs the SSP function, if delivered to AT&T, shall be delivered using GR-394 format for calls destined to IXCs, and GR-317 format for calls destined to end offices that directly subtend an AT&T Access Tandem within the LATA.

5 CLEC Network Design And Management For Interconnection

5.1 Network Management and Changes. The Parties will exchange toll-free maintenance contact numbers and escalation procedures. The Parties will provide public notice of network changes in accordance with applicable federal and state rules and regulations.

5.2 Interconnection Technical Standards. The interconnection of all networks will be based upon accepted industry/national guidelines for transmission standards and traffic blocking criteria. Interconnecting facilities shall conform, at a minimum, to the telecommunications industry standard of DS1 pursuant to Telcordia Standard No. GR-NWT-00499. Where Sprint chooses to utilize SS7 signaling, also known as CCS7, SS7 connectivity is required between the Sprint switch and the AT&T STP. AT&T will provide SS7 signaling using Common Channel Signaling Access Capability in accordance with the technical specifications set forth in the AT&T Guidelines to Technical Publication, GR-905-Core. Facilities of each Party shall provide the necessary on-hook, off-hook answer and disconnect supervision and shall provide calling number ID (Calling Party Number) when technically feasible.

5.3 Network Management Controls. Both Parties will work cooperatively to apply sound network management principles by invoking appropriate network management controls (e.g., call gapping) to alleviate or prevent network congestion.

6 CLEC Forecasting for Trunk Provisioning

6.1 Within six (6) months after execution of this Agreement, Sprint shall provide an initial interconnection trunk group forecast for each LATA in which it plans to provide service within AT&T's Southeast region. Upon receipt of Sprint's forecast, the Parties shall conduct a joint planning meeting to develop a joint interconnection trunk group forecast. Each forecast provided under this Section shall be deemed Confidential Information under the General Terms and Conditions.

6.1.1 At a minimum, the forecast shall include the projected quantity of Transit Trunks, Sprint-to-AT&T one-way trunks (Sprint Trunks), AT&T-to-Sprint one-way trunks (AT&T Trunk Groups) and/or two-way interconnection trunks, if the Parties have agreed to interconnect using two-way trunking to transport the Parties' Local Traffic, ISP-Bound Traffic and IntraLATA Toll Traffic. The quantities shall be projected for a minimum of six (6) months and shall include an estimate of the current year plus the next two (2) years total forecasted quantities. The Parties shall mutually develop AT&T Trunk Groups and/or two-way interconnection trunk forecast quantities.

6.1.2 All forecasts shall include, at a minimum, Access Carrier Terminal Location (ACTL), trunk group type (e.g., local/intraLATA toll, Transit, Operator Services, 911, etc.), A location/Z location (CLLI codes for Sprint location and AT&T location where the trunks shall terminate), interface type (e.g., DS1), Direction of Signaling, Trunk Group Number, if known, (commonly referred to as the 2-6 code) and forecasted trunks in service each year (cumulative).

6.2 Once initial interconnection trunk forecasts have been developed, Sprint shall continue to provide interconnection trunk forecasts at mutually agreeable intervals. Sprint shall use its best efforts to make the forecasts as accurate as possible based on reasonable engineering criteria. The Parties shall continue to develop Reciprocal Trunk Group and/or two-way interconnection trunk forecasts as described in Section 6.1.1 above.

6.3 The submission and development of interconnection trunk forecasts shall not replace the ordering process for local interconnection trunks. Each Party shall exercise its best efforts to provide the quantity of interconnection trunks mutually forecasted. However, the provision of the forecasted quantity of interconnection trunks is subject to trunk terminations and facility capacity existing at the time the trunk order is submitted. Furthermore, the receipt and development of trunk forecasts does not imply any liability for failure to perform if capacity (trunk terminations or facilities) is not available for use at the forecasted time.

6.4 <u>Trunk Utilization</u>

6.4.1 For the AT&T Trunk Groups that are Final Trunk Groups (AT&T Final Trunk Groups), AT&T and Sprint shall monitor traffic on each AT&T Final Trunk Group that is ordered and installed. The Parties agree that the AT&T Final Trunk Groups

will be utilized at sixty percent (60%) of the time consistent busy hour utilization level within ninety (90) days of installation. The Parties agree that the AT&T Final Trunk Groups will be utilized at eighty percent (80%) of the time consistent busy hour utilization level within one hundred eighty (180) days of installation. Any AT&T Final Trunk Group not meeting the minimum thresholds set forth in this Section are defined as "under-utilized" trunks. Subject to Section 6.4.2 below, AT&T may disconnect any under-utilized AT&T Final Trunk Groups and Sprint shall refund to AT&T the associated nonrecurring and recurring trunk and facility charges paid by AT&T, if any.

6.4.2 AT&T's CISC will notify Sprint of any under-utilized AT&T Trunk Groups and the number of such trunk groups that AT&T wishes to disconnect. AT&T will provide supporting information either by email or facsimile to the designated Sprint interface. Sprint will provide concurrence with the disconnection in seven (7) business days or will provide specific information supporting why the trunks should not be disconnected. Such supporting information should include expected traffic volumes (including traffic volumes generated due to Local Number Portability) and the timeframes within which Sprint expects to need such trunks. AT&T's CISC Project Manager and Circuit Capacity Manager (CCM) will discuss the information with Sprint to determine if agreement can be reached on the number of AT&T Final Trunk Groups to be removed. If no agreement can be reached, AT&T will issue disconnect orders to Sprint. The due date of these orders will be four (4) weeks after Sprint was first notified in writing of the underutilization of the trunk groups.

6.4.3 To the extent that any interconnection trunk group is utilized at a time-consistent busy hour of eighty percent (80%) or greater, the Parties may review the trunk groups and, if necessary, shall negotiate in good faith for the installation of augmented facilities.

6.4.4 For the two-way trunk groups, AT&T and Sprint shall monitor traffic on each interconnection trunk group that is ordered and installed. The Parties agree that within ninety (90) days of the installation of the AT&T two-way trunk or trunks, the trunks will be utilized at 60 percent (60%) of the time consistent busy hour utilization level. The Parties agree that within one hundred eighty (180) days of the installation of a trunk or trunks, the trunks will be utilized at eighty percent (80%) of the time consistent busy hour utilization level. Any trunk or trunks not meeting the minimum thresholds set forth in this Section are defined as "under-utilized" trunks. AT&T will request the disconnection of any under-utilized two-way trunk(s) and Sprint shall refund to AT&T the associated nonrecurring and recurring trunk and facility charges paid by AT&T, if any.

6.4.4.1 AT&T's CISC will notify Sprint of any under-utilized two-way trunk groups and the number of trunks that AT&T wishes to disconnect. AT&T will provide supporting information either by email or facsimile to the designated Sprint interface. Sprint will provide concurrence with the disconnection in seven (7)

business days or will provide specific information supporting why the two-way trunks should not be disconnected. Such supporting information should include expected traffic volumes (including traffic volumes generated due to Local Number Portability) and the timeframes within which Sprint expects to need such trunks. AT&T's CISC Project Manager and CCM will discuss the information with Sprint to determine if agreement can be reached on the number of trunks to be removed. If no agreement can be reached, Sprint will issue disconnect orders to AT&T. The due date of these orders will be four (4) weeks after Sprint was first notified in writing of the under-utilization of the trunk groups.

6.4.4.2 To the extent that any interconnection trunk group is utilized at a time-consistent busy hour of eighty percent (80%) or greater, the Parties may review the trunk groups and, if necessary, shall negotiate in good faith for the installation of augmented facilities.

7 CLEC Local Dialing Parity

7.1 AT&T and Sprint shall provide local and toll dialing parity, as defined in FCC rules and regulations, with no unreasonable dialing delays. Dialing parity shall be provided for all originating Telecommunications Services that require dialing to route a call.

8 CLEC Interconnection Compensation

8.1 Compensation for Call Transport and Termination for Local Traffic, ISP-Bound Traffic and IntraLATA Toll Traffic

8.1.1 For the purposes of this Attachment and for intercarrier compensation for Local Traffic exchanged between the Parties pursuant to this Attachment, Local Traffic is defined as any telephone call that originates from one Party's customer located in one exchange and terminates to the other Party's customer in either the same exchange, or other local calling area associated with the originating calling party's exchange as defined and specified in Section A3 of AT&T's GSST.

8.1.1.1 Additionally, Local Traffic includes any cross boundary, voice-to-voice intrastate, interLATA or interstate, interLATA calls established as a local call by the ruling regulatory body.

8.1.2 For purposes of this Attachment and for intercarrier compensation for ISP-Bound Traffic exchanged between the Parties, ISP-Bound Traffic is defined as calls to an information service provider or Internet Service Provider (ISP) that are dialed by using a local dialing pattern (seven (7) or ten (10) digits) by a calling party in one (1) exchange to an ISP server or modem in either the same exchange or other local calling area associated with the originating exchange as defined and specified in Section A3 of AT&T's GSST. ISP-Bound Traffic is not Local Traffic subject to reciprocal compensation, but instead is information access traffic subject to the FCC's jurisdiction.

8.1.3 Neither Party shall pay compensation to the other Party for per minute of use rate elements as set forth in Exhibit A associated with the Call Transport and Termination of Local Traffic or ISP-Bound Traffic.

8.1.4 The appropriate elemental rates set forth in Exhibit A shall apply for Transit Traffic as described in this Attachment and for MTA as described in this Attachment.

8.1.5 Neither Party shall represent Switched Access Traffic as Local Traffic or ISP-Bound Traffic for purposes of determining compensation for the call. If Sprint delivers Switched Access Traffic to AT&T for termination in violation of this Section, AT&T shall charge Sprint terminating switched access charges as set forth in AT&T's Intrastate Access Services Tariff and/or BellSouth's FCC No. 1 Tariff, as appropriate. Additionally, such delivery of traffic shall constitute improper use of AT&T facilities as set forth in Section 1.5.2 of Attachment 7 of this Agreement.

8.1.6 IntraLATA Toll Traffic is defined as all traffic, regardless of transport protocol method, that originates and terminates within a single LATA that is not Local Traffic or ISP-Bound traffic under this Attachment.

8.1.6.1 For terminating its intraLATA toll traffic on the other Party's network, the originating Party will pay the terminating Party AT&T's current intrastate or interstate, whichever is appropriate, terminating switched access tariff rates as set forth in AT&T's intrastate Access Services Tariffs and/or BellSouth's FCC No. 1 Tariff as filed and in effect with the FCC or appropriate Commission. The appropriate charges will be determined by the routing of the call. Additionally, if one (1) Party is the other Party's customer's presubscribed interexchange carrier or if one (1) Party's customer uses the other Party as an interexchange carrier on a 101XXXX basis, the originating party will charge the other Party the appropriate AT&T originating switched access tariff rates as set forth in AT&T's intrastate Access Services Tariff and/or BellSouth's FCC No. 1 Tariff as filed and in effect with the FCC or appropriate Commission.

8.1.7 If Sprint assigns NPA/NXXs to specific AT&T rate centers within the LATA and assigns numbers from those NPA/NXXs to Sprint customer physically located outside of that LATA, AT&T traffic originating from within the LATA where the NPA/NXXs are assigned and delivered to a Sprint customer physically located outside of such LATA, shall not be deemed Local Traffic. Further, Sprint agrees to identify such interLATA traffic to AT&T and to compensate AT&T for originating and transporting such interLATA traffic to Sprint at BellSouth's FCC No. 1 Tariff rates.

8.2 If Sprint does not identify such interLATA traffic to AT&T, AT&T will determine which whole Sprint NPA/NXXs on which to charge the applicable rates for originating network access service as reflected in AT&T's intrastate Access Services Tariff and/or BellSouth's FCC No. 1 Tariff. AT&T shall make

appropriate billing adjustments if Sprint can provide sufficient information for AT&T to determine whether or not said traffic is Local or ISP-Bound Traffic.

8.3 Jurisdictional Reporting

8.3.1 Percent Local Use (PLU). Each Party shall report to the other a PLU factor. The application of the PLU will determine the amount of local or ISP-Bound minutes to be billed to the other Party. Each Party shall update its PLU on the first of January, April, July and October of the year and shall send it to the other Party to be received no later than thirty (30) days after the first of each such month based on local and ISP-Bound usage for the past three (3) months ending the last day of December, March, June and September, respectively. Requirements associated with PLU calculation and reporting shall be as set forth in AT&T's Jurisdictional Factors Reporting Guide.

8.3.2 Percent Local Facility (PLF). Each Party shall report to the other a PLF factor. The application of the PLF will determine the portion of switched dedicated transport to be billed per the local jurisdiction rates. The PLF shall be applied to Multiplexing, Local Channel and Interoffice Channel Switched Dedicated Transport utilized in the provision of local interconnection trunks. Each Party shall update its PLF on the first of January, April, July and October of the year and shall send it to the other Party to be received no later than thirty (30) days after the first of each such month to be effective the first bill period the following month, respectively. Requirements associated with PLF calculation and reporting shall be as set forth in AT&T's Jurisdictional Factors Reporting Guide.

8.3.3 Percent Interstate Usage (PIU). Each Party shall report to the other the projected PIU factors, including but not limited to PIU associated with facilities (PIUE) and Terminating PIU (TPIU) factors. The application of the PIU will determine the respective interstate traffic percentages to be billed at BellSouth's FCC No. 1 Tariff rates. All jurisdictional report requirements, rules and regulations for Interexchange Carriers specified in AT&T's intrastate Access Services Tariff will apply to Sprint. After interstate and intrastate traffic percentages have been determined by use of PIU procedures, the PLU and PLF factors will be used for application and billing of local traffic and facilities. The intrastate toll traffic shall be billed at AT&T's intrastate Access Services Tariff rates. Each Party shall update its PIUs on the first of January, April, July and October of the year and shall send it to the other Party to be received no later than thirty (30) days after the first of each such month, for all services showing the percentages of use for the past three (3) months ending the last day of December, March, June and September. Additional requirements associated with PIU calculations and reporting shall be as set forth in AT&T's Jurisdictional Factors Reporting Guide.

8.3.4 Notwithstanding the provisions in Sections 8.3.1, 8.3.2, and 8.3.3 above, where AT&T has message recording technology that identifies the jurisdiction of traffic terminated as defined in this Agreement, such information shall, at AT&T's option,

be utilized to determine the appropriate jurisdictional reporting factors (i.e., PLU, PIU, and/or PLF), in lieu of those provided by Sprint. In the event that AT&T opts to utilize its own data to determine jurisdictional reporting factors, AT&T shall notify Sprint at least fifteen (15) days prior to the beginning of the calendar quarter in which AT&T will begin to utilize its own data.

8.3.5 Audits. On thirty (30) days written notice, Sprint must provide AT&T the ability and opportunity to conduct an annual audit to ensure the proper billing of traffic. Sprint shall retain records of call detail for a minimum of nine (9) months from which the PLU, PLF and/or PIU can be ascertained. The audit shall be conducted during normal business hours at an office designated by Sprint. Audit requests shall not be submitted more frequently than one (1) time per calendar year. Audits shall be performed by an independent auditor chosen by AT&T. The audited factor (PLF, PLU and/or PIU) shall be adjusted based upon the audit results and shall apply to the usage for the audited period through the time period when the audit is completed, to the usage for the quarter prior to the audit period, and to the usage for the two (2) quarters following the completion of the audit. If, as a result of an audit, Sprint is found to have overstated the PLF, PLU and/or PIU by twenty percentage points (20%) or more, Sprint shall reimburse AT&T for the cost of the audit.

8.4 Compensation for IntraLATA 8XX Traffic. Sprint shall pay the appropriate switched access charges set forth in the AT&T's intrastate Access Services tariff and/or BellSouth's FCC No. 1 Tariff. Sprint will pay AT&T the database query charge as set forth in the applicable AT&T intrastate Access Services Tariff and/or BellSouth's FCC No. 1 Tariff. Sprint will be responsible for any applicable Common Channel Signaling (SS7) charges.

8.4.1 Records for 8XX Billing. Where technically feasible, each Party will provide to the other Party the appropriate records, in accordance with industry standards, necessary for billing intraLATA 8XX providers. The records provided will be in a standard EMI format.

8.4.2 8XX Toll Free Dialing Ten Digit Screening Service (8XX TFD). AT&T's provision of 8XX TFD to Sprint requires interconnection from Sprint to AT&T's 8XX Signal Channel Point. Such interconnections shall be established pursuant to AT&T's Common Channel Signaling Interconnection Guidelines and Telcordia's CCS Network Interface Specification document, TR-TSV-000905. Sprint shall establish SS7 interconnection at the AT&T LSTPs serving the AT&T 8XX Signal Channel Points that Sprint desires to query. The terms and conditions for 8XX TFD are set out in the appropriate AT&T Access Services Tariff.

8.5 Mutual Provision of Switched Access Service

8.5.1 Switched Access Traffic. Switched Access Traffic is described as telephone calls requiring local transmission or switching services for the purpose of the origination or termination of Telephone Toll Service. Switched Access Traffic includes, but is

not limited to, the following types of traffic: Feature Group A, Feature Group B, Feature Group C, Feature Group D, toll free access (e.g., 8XX), 900 access and their successors. Additionally, any PSTN interexchange telecommunications traffic, regardless of transport protocol method, where the originating and terminating points, end-to-end points, are in different LATAs, or are in the same LATA and the Parties' Switched Access services are used for the origination or termination of the call, shall be considered Switched Access Traffic. Irrespective of transport protocol method or method of originating or terminating the call, a call that originates in one LATA and terminates in another LATA (i.e., the end-to-end points of the call) or a call in which the Parties' Switched Access Services are used for the origination or termination of the call, shall be considered Switched Access Traffic.

8.5.2 If an AT&T end user chooses Sprint as their presubscribed interexchange carrier, or if an AT&T end user uses Sprint as an interexchange carrier on a 101XXXX basis, AT&T will charge Sprint the appropriate AT&T tariff charges for originating switched access services.

8.5.3 Where the originating Party delivers a call to the terminating Party over switched access facilities, the originating Party will pay the terminating Party terminating, switched access charges as set forth in AT&T's intrastate Access Services Tariff and/or BellSouth's FCC No. 1 Tariff, as appropriate.

8.5.4 When Sprint's end office switch provides an access service connection to or from an IXC by a direct trunk group to the IXC utilizing AT&T facilities, each Party will provide its own access services to the IXC and bill on a multi-bill, multi-tariff meet-point basis. Each Party will bill its own access services rates to the IXC with the exception of the interconnection charge. The interconnection charge will be billed by Sprint as the Party providing the end office function. Each party will use the Multiple Exchange Carrier Access Billing (MECAB) guidelines to establish Meet Point Billing for all applicable traffic. The Parties shall utilize a thirty (30) day billing period.

8.5.4.1 In cases where Sprint has a unique hosted Revenue Accounting Office (RAO) code and Sprint's end office subtends the AT&T Access Tandem switch for receipt or delivery of switched access traffic and provides an access service connection to or from an IXC via AT&T's Access Tandem switch, AT&T, as the tandem company agrees to provide to Sprint, as the End Office Company, as defined in MECAB, at no charge, all the switched access detail usage data, recorded at the access tandem, within no more than sixty (60) days after the recording date. Each Party will notify the other when it is not feasible to meet these requirements. As business requirements change, data reporting requirements may be modified as necessary.

8.5.5 AT&T, as the tandem provider company, will retain for a minimum period of sixty (60) days, access message detail sufficient to recreate any data that is lost or

damaged by the tandem provider company or any third party involved in processing or transporting data.

8.5.6 Sprint shall not deliver switched access traffic to AT&T for termination over any trunks and facilities other than Sprint ordered switched access trunks and facilities.

8.6 Transit Traffic

8.6.1 AT&T shall provide tandem switching and transport services for Sprint's Transit Traffic. Rates for local Transit Traffic and ISP-Bound Transit Traffic shall be the applicable rate elements for Tandem Switching, Common Transport and Tandem Intermediary Charge as set forth in Exhibit A. Rates for Switched Access Transit Traffic shall be the applicable charges as set forth in AT&T's intrastate Access Services Tariff and/or BellSouth's FCC No. 1 Tariff. Billing associated with all Transit Traffic shall be pursuant to MECAB guidelines. Traffic between Sprint and Wireless Type 1 third parties or Wireless Type 2A third parties that do not engage in Meet Point Billing with AT&T shall not be treated as Transit Traffic from a routing or billing perspective until such time as such traffic is identifiable as Transit Traffic.

8.6.2 The delivery of traffic that transits the AT&T network is excluded from any AT&T billing guarantees. AT&T agrees to deliver Transit Traffic to the terminating carrier; provided, however, that Sprint is solely responsible for negotiating and executing any appropriate contractual agreements with the terminating carrier for the exchange of Transit Traffic through the AT&T network. AT&T will not be liable for any compensation to the terminating carrier or to Sprint. In the event that the terminating third party carrier imposes on AT&T any charges or costs for the delivery of Transit Traffic, Sprint shall reimburse AT&T for such charges or costs.

8.7 For purposes of intercarrier compensation, AT&T will not be responsible for any compensation associated with the exchange of traffic between Sprint and a CLEC utilizing AT&T switching. Where technically feasible, AT&T will use commercially reasonable efforts to provide records to Sprint to identify those CLECs utilizing AT&T switching with whom Sprint has exchanged traffic. Such traffic shall not be considered Transit Traffic from a routing or billing perspective, but instead will be considered as traffic exchanged solely between Sprint and the CLEC utilizing AT&T switching.

8.7.1 Sprint is solely responsible for negotiating and executing any appropriate contractual agreements with the terminating carrier for the exchange of traffic with a CLEC utilizing AT&T switching. AT&T will not be liable for any compensation to the terminating carrier or to Sprint. In the event that the terminating third party carrier imposes on AT&T any charges or costs for the delivery of such traffic, Sprint shall reimburse AT&T for all such charges or costs.

8.8 Sprint shall send all IntraLATA toll traffic to be terminated by an independent telephone company to the End User's IntraLATA toll provider and shall not send such traffic to AT&T as Transit Traffic. IntraLATA toll traffic shall be any traffic that originates outside of the terminating independent telephone company's local calling area.

9 CLEC Ordering Charges

9.1 The facilities purchased pursuant to this Attachment shall be ordered via the ASR process.

9.2 The rates, terms and conditions associated with submission and processing of ASRs are as set forth in BellSouth's FCC No. 1 Tariff, Section 5.

10 CLEC Basic 911 and E911 Interconnection

10.1 Basic 911 and E911 provides a caller access to the applicable emergency service bureau by dialing 911.

10.2 Basic 911 Interconnection. AT&T will provide to Sprint a list consisting of each municipality that subscribes to Basic 911 service. The list will also provide, if known, the E911 conversion date for each municipality and, for network routing purposes, a ten (10) digit directory number representing the appropriate emergency answering position for each municipality subscribing to 911. Sprint will be required to arrange to accept 911 calls from its end users in municipalities that subscribe to Basic 911 service and translate the 911 call to the appropriate ten (10) digit directory number as stated on the list provided by AT&T. Sprint will be required to route that call to the appropriate PSAP. When a municipality converts to E911 service, Sprint will be required to begin using E911 procedures.

10.3 E911 Interconnection. Sprint shall install a minimum of two (2) dedicated trunks originating from its SWC and terminating to the appropriate E911 tandem. The SWC must be in the same LATA as the E911 tandem. The dedicated trunks shall be, at a minimum, DS0 level trunks configured as part of a digital (one point five forty-four (1.544) Mb/s) interface (DS1 facility). The configuration shall use CAMA-type signaling with MF pulsing or SS7/ISUP signaling either of which shall deliver ANI with the voice portion of the call. If SS7/ISUP connectivity is used, Sprint shall follow the procedures as set forth in Appendix A of the CLEC Users Guide to E911 for Facility Based Providers that is located on the AT&T Interconnection Web site. If the user interface is digital, MF pulses as well as other AC signals shall be encoded per the u-255 Law convention. Sprint will be required to provide AT&T daily updates to the E911 database. Sprint will be required to forward 911 calls to the appropriate E911 tandem along with ANI based upon the current E911 end office to tandem homing arrangement as provided by AT&T. If the E911 tandem trunks are not available, Sprint will be required to route the call to a designated seven (7) digit or ten (10) digit local number residing in the appropriate PSAP. This call will be transported over

AT&T's interoffice network and will not carry the ANI of the calling party. Sprint shall be responsible for providing AT&T with complete and accurate data for submission to the 911/E911 database for the purpose of providing 911/E911 to its end users.

10.4 Trunks and facilities for 911 Interconnection may be ordered by Sprint from AT&T pursuant to the terms and conditions set forth in this Attachment.

10.5 The detailed practices and procedures for 911/E911 interconnection are contained in the E911 Local Exchange Carrier Guide For Facility-Based Providers that is located on the AT&T Interconnection Services Web site.

11 CLEC SS7 Network Interconnection

11.1 SS7 Signaling. Both Parties will utilize LEC-to-LEC SS7 Signaling, where available, in conjunction with all traffic in order to enable interoperability of CLASS features and functions except for call return. SS7 signaling parameters will be provided, including but not limited to ANI, originating line information (OLI) calling company category and charge number. Privacy indicators will be honored, and the Parties will exchange Transactional Capabilities Application Part (TCAP) messages to facilitate SS7 based features between the respective networks. Neither Party shall alter the SS7 parameters, or be a party to altering such parameters, or knowingly pass SS7 parameters that have been altered in order to circumvent appropriate interconnection charges. Nothing herein shall obligate or otherwise require AT&T to send SS7 messages or call-related database queries to Sprint's or any other third party's call-related database, unless otherwise agreed to by the Parties under a separate agreement.

11.2 Signaling Call Information. AT&T and Sprint will send and receive ten (10) digits for Local Traffic. Additionally, AT&T and Sprint will exchange the proper call information, (i.e., originated call company number and destination call company number, CIC, and OZZ) including all proper translations for routing between networks and any information necessary for billing.

11.3 SS7 Network Interconnection is the interconnection of Sprint LSTP switches or Sprint local or tandem switching systems with AT&T STP switches. This interconnection provides connectivity that enables the exchange of SS7 messages among AT&T switching systems and databases, Sprint local or tandem switching systems, and other third party switching systems directly connected to the AT&T SS7 network.

11.3.1 The connectivity provided by SS7 Network Interconnection shall fully support the functions of AT&T switching systems and databases and Sprint or other third party switching systems with A-link access to the AT&T SS7 network.

11.3.2 If traffic is routed based on dialed or translated digits between a Sprint local switching system and an AT&T or other third party local switching system, either

directly or via an AT&T tandem switching system, then it is a requirement that the AT&T SS7 network convey via SS7 Network Interconnection the TCAP messages that are necessary to provide Call Management services (i.e., Automatic Callback, Automatic Recall, and Screening List Editing) between the Sprint LSTP switches and AT&T or other third party local switch.

11.3.3 SS7 Network Interconnection shall provide:

11.3.3.1 Signaling Data Link functions, as specified in ANSI T1.111.2;

11.3.3.2 Signaling Link functions, as specified in ANSI T1.111.3; and

11.3.3.3 Signaling Network Management functions, as specified in ANSI T1.111.4.

11.3.4 SS7 Network Interconnection shall provide all functions of the SCCP necessary for Class 0 (basic connectionless) service as specified in ANSI T1.112. This includes GTT and SCCP Management procedures as specified in ANSI T1.112.4. Where the destination signaling point is an AT&T switching system or DB, or is another third party local or tandem switching system directly connected to the AT&T SS7 network, SS7 Network Interconnection shall include final GTT of messages to the destination and SCCP Subsystem Management of the destination. Where the destination signaling point is a Sprint local or tandem switching system, SS7 Network Interconnection shall include intermediate GTT of messages to a gateway pair of Sprint LSTPs and shall not include SCCP Subsystem Management of the destination.

11.3.5 SS7 Network Interconnection shall provide all functions of the ISUP as specified in ANSI T1.113.

11.3.6 SS7 Network Interconnection shall provide all functions of the TCAP as specified in ANSI T1.114.

11.3.7 If Internetwork MRVT and SRVT become approved ANSI standards and available capabilities of AT&T STPs, SS7 Network Interconnection may provide these functions of the OMAP.

11.4 Interface Requirements. The following SS7 Network Interconnection interface options are available to connect Sprint or Sprint-designated local or tandem switching systems or signaling transfer point switches to the AT&T SS7 network:

11.4.1 A-link interface from Sprint local or tandem switching systems; and

11.4.2 B-link interface from Sprint STPs.

11.4.3 The Signaling Point of Interconnection for each link shall be located at a cross-connect element in the central office where the AT&T STP is located. There shall be a DS1 or higher rate transport interface at each of the signaling points of

interconnection. Each signaling link shall appear as a DS0 channel within the DS1 or higher rate interface.

11.4.4 AT&T shall provide intraoffice diversity between the Signaling Point of Interconnection and the AT&T STP, so that no single failure of intraoffice facilities or equipment shall cause the failure of both B-links in a layer connecting to an AT&T STP.

11.4.5 The protocol interface requirements for SS7 Network Interconnection include the MTP, ISUP, SCCP, and TCAP. These protocol interfaces shall conform to the applicable industry standard technical references.

11.4.6 AT&T shall set message screening parameters to accept messages from Sprint local or tandem switching systems destined to any signaling point in the AT&T SS7 network with which the Sprint switching system has a valid signaling relationship.

11.5 Rates. The Parties shall institute a "bill and keep" compensation plan under which neither Party will charge the other Party for ISUP CCS7 signaling messages associated with Local Traffic. The portion of ISUP CCS7 signaling messages utilized for Local Traffic, which is subject to bill and keep in accordance with this section, shall be determined based upon the application of the applicable signaling factors set forth in AT&T's Jurisdictional Factors Reporting Guide. All other CCS7 signaling messages associated with Local Traffic will be billed at the rates set forth in Exhibit A. In addition, CCS7 facility charges, including charges for signaling ports and signaling links, utilized for Local Traffic will be billed at the rates set forth in Exhibit A. CCS7 signaling messages, signaling ports, and signaling links associated with interstate calls and with intrastate non-local calls, shall be billed in accordance with the applicable AT&T intrastate Access Services Tariff and BellSouth's FCC No. 1 Tariff for switched access services.

Exhibit B

Basic Architecture

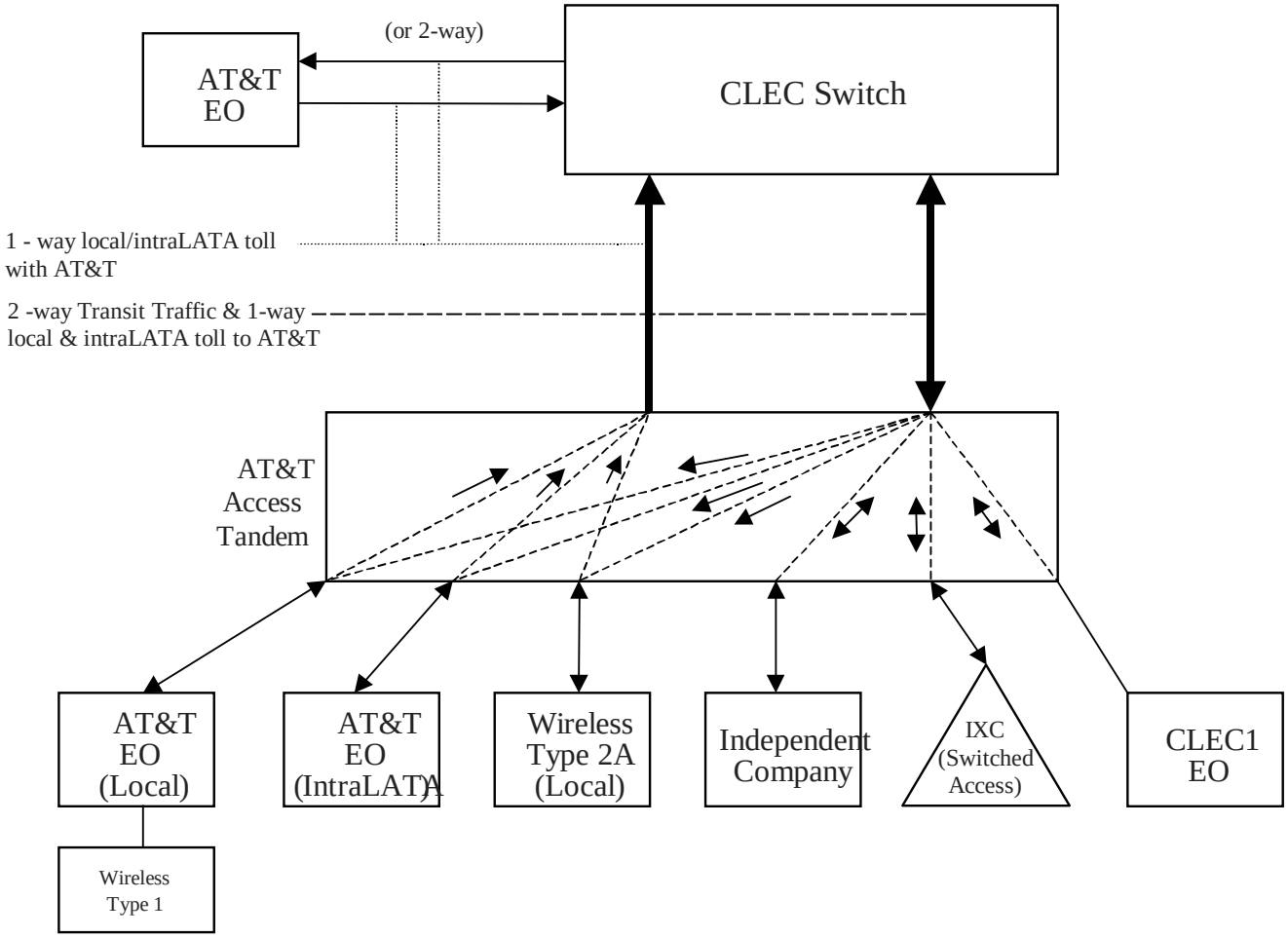

Version: 2Q0
04/26/07

Exhibit C

One-Way Architecture

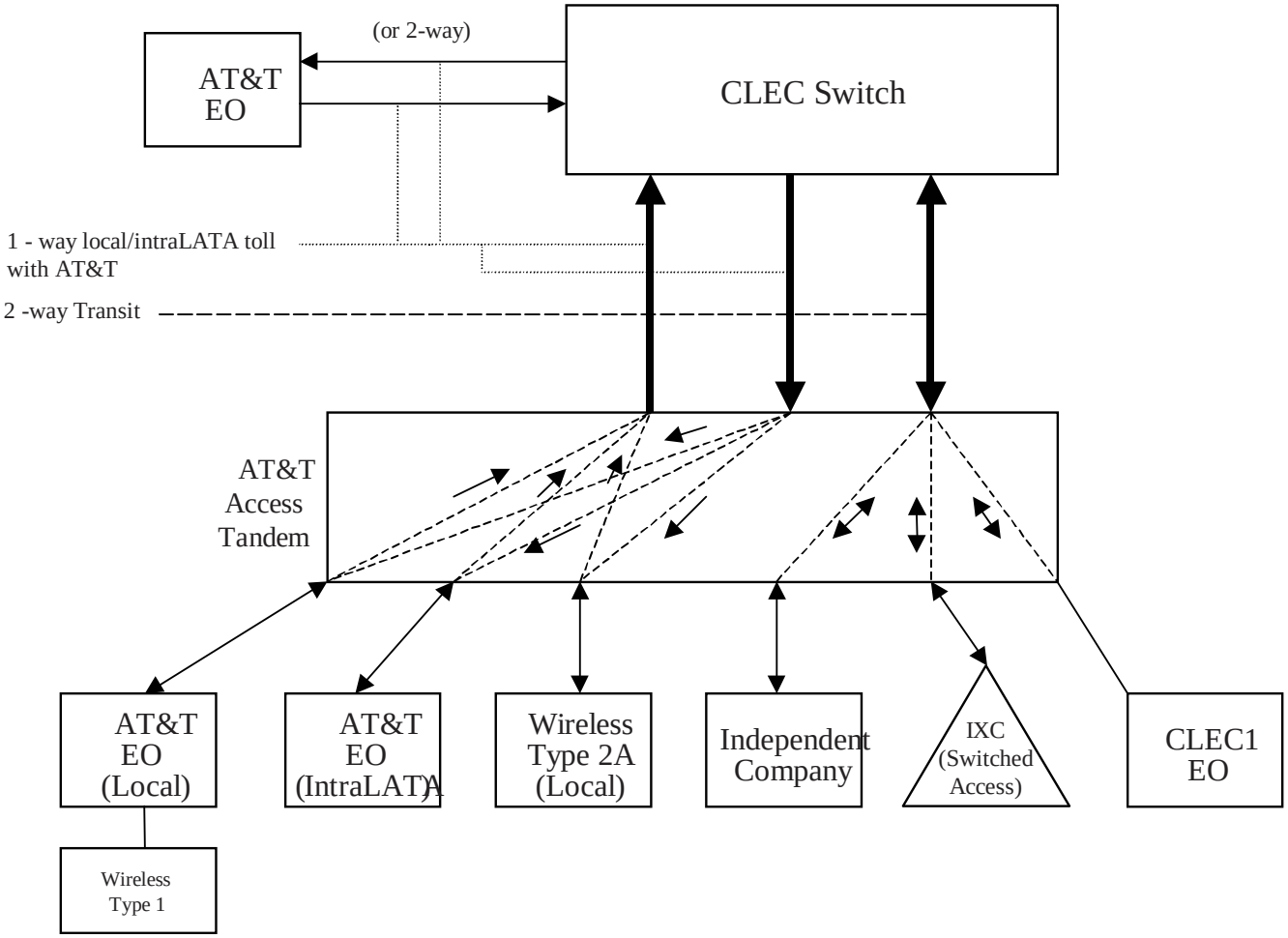

Exhibit D

Two-Way Architecture

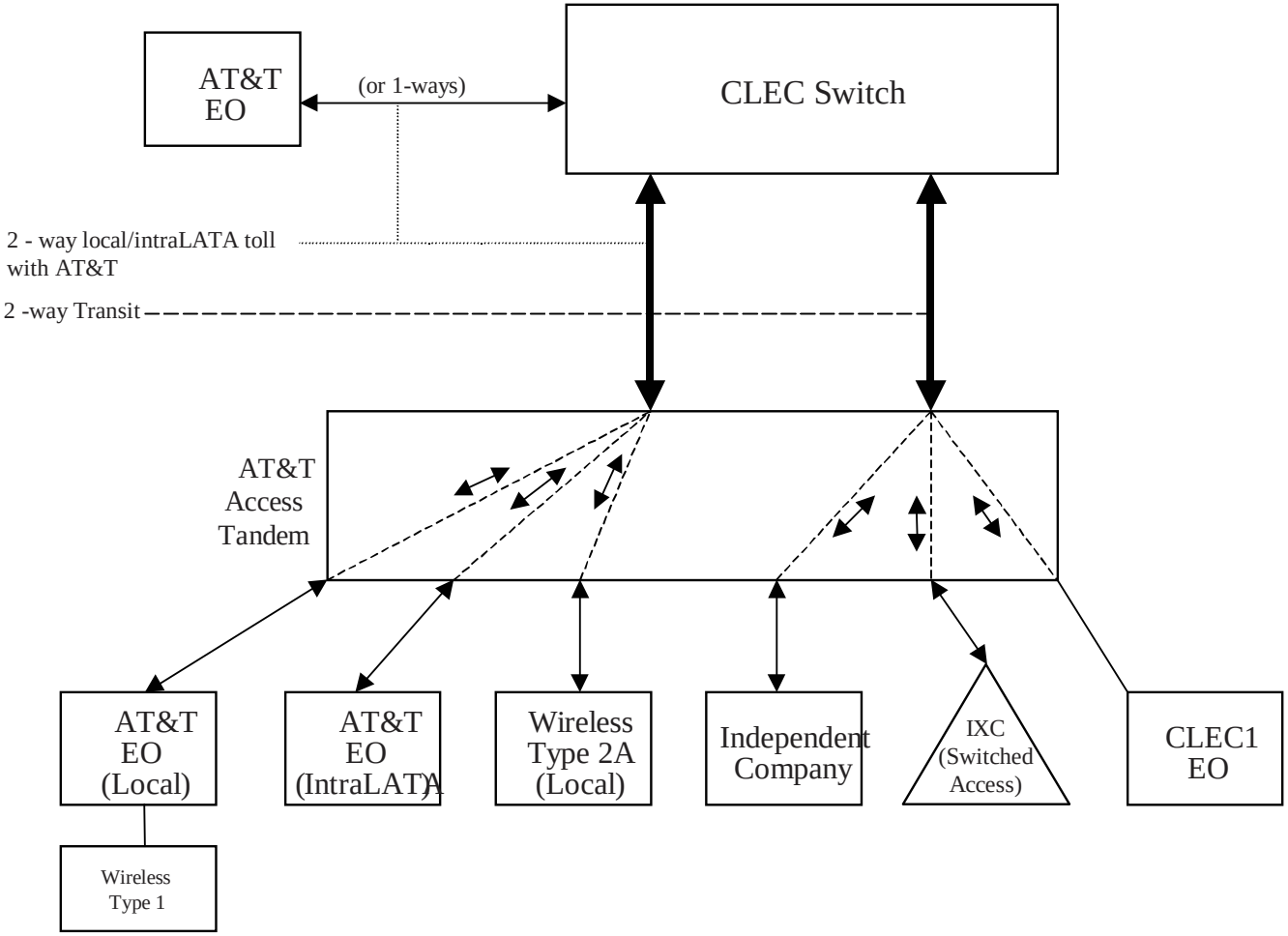

Exhibit E

Supergroup Architecture

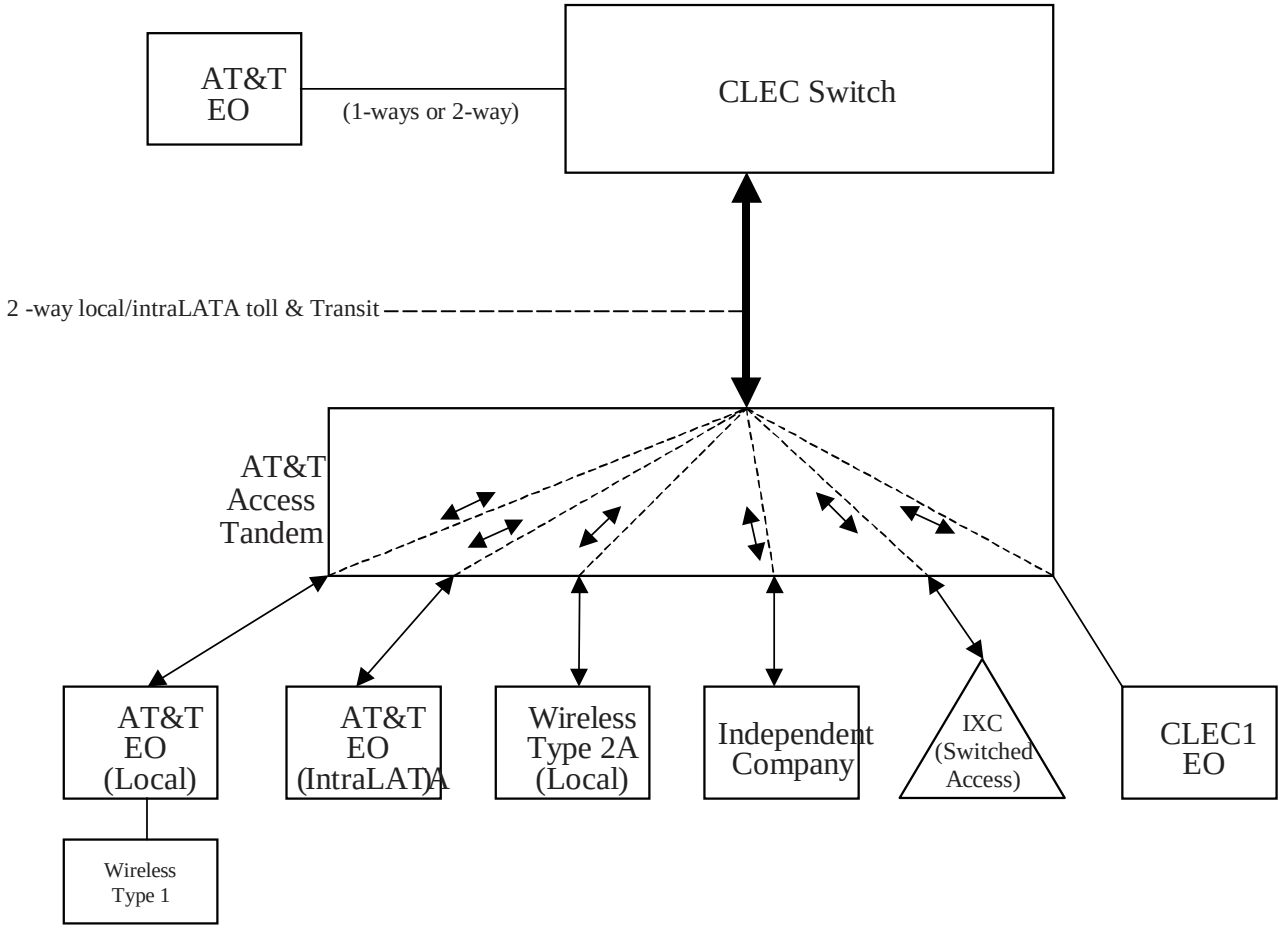

LOCAL INTERCONNECTION - Alabama

Att: 3 Exh: A

CATEGORY	RATE ELEMENTS	Interim	Zone	BCS	USOC	RATES($) Rec	Nonrecurring First	Nonrecurring Add'l	Nonrecurring Disconnect First	Nonrecurring Disconnect Add'l	Svc Order Submitted Elec per LSR	Svc Order Submitted Manually per LSR	Incremental Charge - Manual Svc Order vs. Electronic-1st	Incremental Charge - Manual Svc Order vs. Electronic-Add'l	Incremental Charge - Manual Svc Order vs. Electronic-Disc 1st	Incremental Charge - Manual Svc Order vs. Electronic-Disc Add'l
											OSS Rates($)					
							First	Add'l	First	Add'l	SOMEC	SOMAN	SOMAN	SOMAN	SOMAN	SOMAN
LOCAL INTERCONNECTION (CALL TRANSPORT AND TERMINATION)																
	NOTE: "bk" beside a rate indicates that the Parties have agreed to bill and keep for that element pursuant to the terms and conditions in Attachment 3.															
	TANDEM SWITCHING															
	Tandem Switching Function Per MOU					0.0004980bk										
	Multiple Tandem Switching, per MOU (applies to intial tandem only)					0.000498										
	Tandem Intermediary Charge, per MOU* (Effective through 6/29/2010)					0.001500										
	Tandem Intermediary Charge, per MOU* (Effective beginning 6/30/2010)					0.0025										
	*** This charge is applicable only to transit traffic and is applied in addition to applicable switching and/or interconnection charges.**															
	TRUNK CHARGE															
	Installation Trunk Side Service - per DS0			OHD	TPP6X		21.56	8.12								
	Installation Trunk Side Service - per DS0			OHD	TPP9X		21.56	8.12								
	Dedicated End Office Trunk Port Service-per DS0**			OHD	TDEOP	0.00										
	Dedicated End Office Trunk Port Service-per DS1**			OH1 OH1MS	TDE1P	0.00										
	Dedicated Tandem Trunk Port Service-per DS0**			OHD	TDWOP	0.00										
	Dedicated Tandem Trunk Port Service-per DS1**			OH1 OH1MS	TDW1P	0.00										
	**** This rate element is recovered on a per MOU basis and is included in the End Office Switching and Tandem Switching, per MOU rate elements**															
	COMMON TRANSPORT (Shared)															
	Common Transport - Per Mile, Per MOU					0.0000023bk										
	Common Transport - Facilities Termination Per MOU					0.0003224bk										
LOCAL INTERCONNECTION (DEDICATED TRANSPORT)																
	INTEROFFICE CHANNEL - DEDICATED TRANSPORT															
	Interoffice Channel - Dedicated Transport - 2-Wire Voice Grade - Per Mile per month			OHM	1L5NF	0.008838										
	Interoffice Channel - Dedicated Transport- 2- Wire Voice Grade - Facility Termination per month			OHM	1L5NF	21.13	40.54	27.41	16.74	6.90						
	Interoffice Channel - Dedicated Transport - 56 kbps - per mile per month			OHM	1L5NK	0.008838										
	Interoffice Channel - Dedicated Transport - 56 kbps - Facility Termination per month			OHM	1L5NK	15.12	40.54	27.41	16.74	6.90						
	Interoffice Channel - Dedicated Transport - 64 kbps - per mile per month			OHM	1L5NK	0.008838										
	Interoffice Channel - Dedicated Transport - 64 kbps - Facility Termination per month			OHM	1L5NK	15.12	40.54	27.41	16.74	6.90						
	Interoffice Channel - Dedicated Channel - DS1 - Per Mile per month			OH1, OH1MS	1L5NL	0.18										
	Interoffice Channel - Dedicated Tranport - DS1 - Facility Termination per month			OH1, OH1MS	1L5NL	60.16	89.27	81.81	16.35	14.44						
	Interoffice Channel - Dedicated Transport - DS3 - Per Mile per month			OH3, OH3MS	1L5NM	4.09										
	Interoffice Channel - Dedicated Transport - DS3 - Facility Termination per month			OH3, OH3MS	1L5NM	703.52	278.75	162.76	60.20	58.46						
	LOCAL CHANNEL - DEDICATED TRANSPORT															
	Local Channel - Dedicated - 2-Wire Voice Grade per month			OHM	TEFV2	13.97	193.10	33.17	36.64	3.20						
	Local Channel - Dedicated - 4-Wire Voice Grade per month			OHM	TEFV4	14.93	193.53	33.60	37.11	3.67						
	Local Channel - Dedicated - DS1 per month			OH1	TEFHG	35.76	177.47	153.72	22.19	15.26						
	Local Channel - Dedicated - DS3 Facility Termination per month			OH3	TEFHJ	416.54	451.52	263.94	119.49	83.58						
	LOCAL INTERCONNECTION MID-SPAN MEET															
	Local Channel - Dedicated - DS1 per month			OH1MS	TEFHG	0.00	0.00									
	Local Channel - Dedicated - DS3 per month			OH3MS	TEFHJ	0.00	0.00									
	MULTIPLEXERS															
	Channelization - DS1 to DS0 Channel System			OH1, OH1MS	SATN1	101.06	91.04	62.57	10.54	9.79						
	DS3 to DS1 Channel System per month			OH3, OH3MS	SATNS	166.13	178.14	93.97	33.26	31.63						
	DS3 Interface Unit (DS1 COCI) per month			OH1, OH1MS	SATCO	12.70	6.58	4.72								
	Notes: If no rate is identified in the contract, the rates, terms, and conditions for the specific service or function will be as set forth in applicable BellSouth tariff.															
SIGNALING (CCS7)																
	NOTE:"bk" beside a rate indicates that the parties have agreed to bill and keep for that element pursuant to the terms and conditions in Attachment 3.															
	CCS7 Signaling Termination, Per STP Port			UDB	PT8SX	130.83										
	CCS7 Signaling Usage, Per TCAP Message					0.0000569										
	CCS7 Signaling Connection, Per DS1 level link (A link)			UDB	TPP6A	15.46	35.53	35.53	16.44	16.44						

LOCAL INTERCONNECTION - Alabama																	Att: 3 Exh: A
CATEGORY		RATE ELEMENTS	Interim	Zone	BCS	USOC	RATES($)					Svc Order Submitted Elec per LSR	Svc Order Submitted Manually per LSR	Incremental Charge - Manual Svc Order vs. Electronic-1st	Incremental Charge - Manual Svc Order vs. Electronic-Add'l	Incremental Charge - Manual Svc Order vs. Electronic-Disc 1st	Incremental Charge - Manual Svc Order vs. Electronic-Disc Add'l
							Rec	Nonrecurring		Nonrecurring Disconnect		OSS Rates($)					
								First	Add'l	First	Add'l	SOMEC	SOMAN	SOMAN	SOMAN	SOMAN	SOMAN
		CCS7 Signaling Connection, Per DS3 level link (A link)			UDB	TPP9A	15.46	35.53	35.53	16.44	16.44						
		CCS7 Signaling Connection, Per DS1 level link (B link) (also known as D link)			UDB	TPP6B	15.46	35.53	35.53	16.44	16.44						
		CCS7 Signaling Connection, Per DS3 level link (B link) (also known as D link)			UDB	TPP9B	15.46	35.53	35.53	16.44	16.44						
		CCS7 Signaling Usage, Per ISUP Message					0.0000142bk										
		CCS7 Signaling Usage Surrogate, per link per LATA			UDB	STU56	650.33bk										
		CCS7 Signaling Point Code, per Originating Point Code Establishment or Change, per STP affected			UDB	CCAPO		29.01	29.01	35.57	35.57						
		CCS7 Signaling Connection, Switched access service, interface groups, transmissiom paths 6 DS1 level path with bit stream signaling			UDB	TPP6X	15.46	35.53	35.53	16.44	16.44						
		CCS7 Signaling Connection, Switched access service, interface groups, transmissiom paths 9 DS3 level path with bit stream signaling			UDB	TPP9X	15.46	35.53	35.53	16.44	16.44						

LOCAL INTERCONNECTION - Florida

Att: 3 Exh: A

CATEGORY	RATE ELEMENTS	Interim	Zone	BCS	USOC	RATES($) Rec	Nonrecurring First	Nonrecurring Add'l	Nonrecurring Disconnect First	Nonrecurring Disconnect Add'l	Svc Order Submitted Elec per LSR	Svc Order Submitted Manually per LSR	Incremental Charge - Manual Svc Order vs. Electronic- 1st	Incremental Charge - Manual Svc Order vs. Electronic- Add'l	Incremental Charge - Manual Svc Order vs. Electronic- Disc 1st	Incremental Charge - Manual Svc Order vs. Electronic- Disc Add'l
											OSS Rates($)					
							First	Add'l	First	Add'l	SOMEC	SOMAN	SOMAN	SOMAN	SOMAN	SOMAN
LOCAL INTERCONNECTION (CALL TRANSPORT AND TERMINATION)																
	NOTE: "bk" beside a rate indicates that the Parties have agreed to bill and keep for that element pursuant to the terms and conditions in Attachment 3.															
	TANDEM SWITCHING															
	Tandem Switching Function Per MOU					0.0006019bk										
	Multiple Tandem Switching, per MOU (applies to intial tandem only)					0.0006019										
	Tandem Intermediary Charge, per MOU* (Effective beginning 6/30/2010)					0.0025										
	*** This charge is applicable only to transit traffic and is applied in addition to applicable switching and/or interconnection charges.**															
	TRUNK CHARGE															
	Installation Trunk Side Service - per DS0			OHD	TPP6X		21.73	8.19								
	Installation Trunk Side Service - per DS0			OHD	TPP9X		21.73	8.19								
	Dedicated End Office Trunk Port Service-per DS0**			OHD	TDEOP	0.00										
	Dedicated End Office Trunk Port Service-per DS1**			OH1 OH1MS	TDE1P	0.00										
	Dedicated Tandem Trunk Port Service-per DS0**			OHD	TDWOP	0.00										
	Dedicated Tandem Trunk Port Service-per DS1**			OH1 OH1MS	TDW1P	0.00										
	**** This rate element is recovered on a per MOU basis and is included in the End Office Switching and Tandem Switching, per MOU rate elements**															
	COMMON TRANSPORT (Shared)															
	Common Transport - Per Mile, Per MOU					0.0000035bk										
	Common Transport - Facilities Termination Per MOU					0.0004372bk										
LOCAL INTERCONNECTION (DEDICATED TRANSPORT)																
	INTEROFFICE CHANNEL - DEDICATED TRANSPORT															
	Interoffice Channel - Dedicated Transport - 2-Wire Voice Grade - Per Mile per month			OHM	1L5NF	0.0091										
	Interoffice Channel - Dedicated Transport- 2- Wire Voice Grade - Facility Termination per month			OHM	1L5NF	25.32	47.35	31.78	18.31	7.03						
	Interoffice Channel - Dedicated Transport - 56 kbps - per mile per month			OHM	1L5NK	0.0091										
	Interoffice Channel - Dedicated Transport - 56 kbps - Facility Termination per month			OHM	1L5NK	18.44	47.35	31.78	18.31	7.03						
	Interoffice Channel - Dedicated Transport - 64 kbps - per mile per month			OHM	1L5NK	0.0091										
	Interoffice Channel - Dedicated Transport - 64 kbps - Facility Termination per month			OHM	1L5NK	18.44	47.35	31.78	18.31	7.03						
	Interoffice Channel - Dedicated Channel - DS1 - Per Mile per month			OH1, OH1MS	1L5NL	0.1856										
	Interoffice Channel - Dedicated Tranport - DS1 - Facility Termination per month			OH1, OH1MS	1L5NL	88.44	105.54	98.47	21.47	19.05						
	Interoffice Channel - Dedicated Transport - DS3 - Per Mile per month			OH3, OH3MS	1L5NM	3.87										
	Interoffice Channel - Dedicated Transport - DS3 - Facility Termination per month			OH3, OH3MS	1L5NM	1,071.00	335.46	219.28	72.03	70.56						
	LOCAL CHANNEL - DEDICATED TRANSPORT															
	Local Channel - Dedicated - 2-Wire Voice Grade per month			OHM	TEFV2	19.66	265.84	46.97	37.63	4.00						
	Local Channel - Dedicated - 4-Wire Voice Grade per month			OHM	TEFV4	20.45	266.54	47.67	44.22	5.33						
	Local Channel - Dedicated - DS1 per month			OH1	TEFHG	36.49	216.65	183.54	24.30	16.95						
	Local Channel - Dedicated - DS3 Facility Termination per month			OH3	TEFHJ	531.91	556.37	343.01	139.13	96.84						
	LOCAL INTERCONNECTION MID-SPAN MEET															
	Local Channel - Dedicated - DS1 per month			OH1MS	TEFHG	0.00	0.00									
	Local Channel - Dedicated - DS3 per month			OH3MS	TEFHJ	0.00	0.00									
	MULTIPLEXERS															
	Channelization - DS1 to DS0 Channel System			OH1, OH1MS	SATN1	146.77	101.42	71.62	11.09	10.49						
	DS3 to DS1 Channel System per month			OH3, OH3MS	SATNS	211.19	199.28	118.64	40.34	39.07						
	DS3 Interface Unit (DS1 COCI) per month			OH1, OH1MS	SATCO	13.76	10.07	7.08								
	Notes: If no rate is identified in the contract, the rates, terms, and conditions for the specific service or function will be as set forth in applicable BellSouth tariff.															
SIGNALING (CCS7)																
	NOTE:"bk" beside a rate indicates that the parties have agreed to bill and keep for that element pursuant to the terms and conditions in Attachment 3.															
	CCS7 Signaling Termination, Per STP Port			UDB	PT8SX	135.05										
	CCS7 Signaling Usage, Per TCAP Message					0.0000607										
	CCS7 Signaling Connection, Per DS1 level link (A link)			UDB	TPP6A	17.93	43.57	43.57	18.31	18.31						
	CCS7 Signaling Connection, Per DS3 level link (A link)			UDB	TPP9A	17.93	43.57	43.57	18.31	18.31						

LOCAL INTERCONNECTION - Florida																	Att: 3 Exh: A
CATEGORY		RATE ELEMENTS	Interim	Zone	BCS	USOC	RATES($)					Svc Order Submitted Elec per LSR	Svc Order Submitted Manually per LSR	Incremental Charge - Manual Svc Order vs. Electronic-1st	Incremental Charge - Manual Svc Order vs. Electronic-Add'l	Incremental Charge - Manual Svc Order vs. Electronic-Disc 1st	Incremental Charge - Manual Svc Order vs. Electronic-Disc Add'l
							Rec	Nonrecurring		Nonrecurring Disconnect		OSS Rates($)					
								First	Add'l	First	Add'l	SOMEC	SOMAN	SOMAN	SOMAN	SOMAN	SOMAN
		CCS7 Signaling Connection, Per DS1 level link (B link) (also known as D link)			UDB	TPP6B	17.93	43.57	43.57	18.31	18.31						
		CCS7 Signaling Connection, Per DS3 level link (B link) (also known as D link)			UDB	TPP9B	17.93	43.57	43.57	18.31	18.31						
		CCS7 Signaling Usage, Per ISUP Message					0.0000152bk										
		CCS7 Signaling Usage Surrogate, per link per LATA			UDB	STU56	694.32bk										
		CCS7 Signaling Point Code, per Originating Point Code Establishment or Change, per STP affected			UDB	CCAPO		46.03	46.03	46.03	46.03						
		CCS7 Signaling Point Code, per Destination Point Code Establishment or Change, Per Stp Affected			UDB	CCAPD											
		CCS7 Signaling Connection, Switched access service, interface groups, transmissiom paths 6 DS1 level path with bit stream signaling			UDB	TPP6X	17.93	43.57	43.57	18.31	18.31						
		CCS7 Signaling Connection, Switched access service, interface groups, transmissiom paths 9 DS3 level path with bit stream signaling			UDB	TPP9X	17.93	43.57	43.57	18.31	18.31						

LOCAL INTERCONNECTION - Georgia

Att: 3 Exh: A

CATEGORY	RATE ELEMENTS	Interim	Zone	BCS	USOC	RATES($) Rec	Nonrecurring First	Nonrecurring Add'l	Nonrecurring Disconnect First	Nonrecurring Disconnect Add'l	Svc Order Submitted Elec per LSR	Svc Order Submitted Manually per LSR	Incremental Charge - Manual Svc Order vs. Electronic-1st	Incremental Charge - Manual Svc Order vs. Electronic-Add'l	Incremental Charge - Manual Svc Order vs. Electronic-Disc 1st	Incremental Charge - Manual Svc Order vs. Electronic-Disc Add'l
											OSS Rates($)					
							First	Add'l	First	Add'l	SOMEC	SOMAN	SOMAN	SOMAN	SOMAN	SOMAN
LOCAL INTERCONNECTION (CALL TRANSPORT AND TERMINATION)																
	NOTE: "bk" beside a rate indicates that the Parties have agreed to bill and keep for that element pursuant to the terms and conditions in Attachment 3.															
	TANDEM SWITCHING															
	Tandem Switching Function Per MOU					0.0004186bk										
	Multiple Tandem Switching, per MOU (applies to intial tandem only)					0.0004186										
	Tandem Intermediary Charge, per MOU* (Effective beginning 6/30/2010)					0.0025										
	*** This charge is applicable only to transit traffic and is applied in addition to applicable switching and/or interconnection charges.**															
	TRUNK CHARGE															
	Installation Trunk Side Service - per DS0			OHD	TPP6X		21.53	8.11								
	Installation Trunk Side Service - per DS0			OHD	TPP9X		21.53	8.11								
	Dedicated End Office Trunk Port Service-per DS0**			OHD	TDEOP	0.00										
	Dedicated End Office Trunk Port Service-per DS1**			OH1 OH1MS	TDE1P	0.00										
	Dedicated Tandem Trunk Port Service-per DS0**			OHD	TDWOP	0.00										
	Dedicated Tandem Trunk Port Service-per DS1**			OH1 OH1MS	TDW1P	0.00										
	**** This rate element is recovered on a per MOU basis and is included in the End Office Switching and Tandem Switching, per MOU rate elements**															
	COMMON TRANSPORT (Shared)															
	Common Transport - Per Mile, Per MOU					0.0000028bk										
	Common Transport - Facilities Termination Per MOU					0.0001955bk										
LOCAL INTERCONNECTION (DEDICATED TRANSPORT)																
	INTEROFFICE CHANNEL - DEDICATED TRANSPORT															
	Interoffice Channel - Dedicated Transport - 2-Wire Voice Grade - Per Mile per month			OHM	1L5NF	0.0059										
	Interoffice Channel - Dedicated Transport- 2- Wire Voice Grade - Facility Termination per month			OHM	1L5NF	13.15	48.41	19.46	16.56	4.99						
	Interoffice Channel - Dedicated Transport - 56 kbps - per mile per month			OHM	1L5NK	0.0059										
	Interoffice Channel - Dedicated Transport - 56 kbps - Facility Termination per month			OHM	1L5NK	8.00	48.41	19.46	16.56	4.99						
	Interoffice Channel - Dedicated Transport - 64 kbps - per mile per month			OHM	1L5NK	0.0059										
	Interoffice Channel - Dedicated Transport - 64 kbps - Facility Termination per month			OHM	1L5NK	8.00	48.41	19.46	16.56	4.99						
	Interoffice Channel - Dedicated Channel - DS1 - Per Mile per month			OH1, OH1MS	1L5NL	0.1199										
	Interoffice Channel - Dedicated Tranport - DS1 - Facility Termination per month			OH1, OH1MS	1L5NL	34.93	110.92	80.20	31.33	21.71						
	Interoffice Channel - Dedicated Transport - DS3 - Per Mile per month			OH3, OH3MS	1L5NM	2.63										
	Interoffice Channel - Dedicated Transport - DS3 - Facility Termination per month			OH3, OH3MS	1L5NM	349.42	320.16	86.24	66.71	52.76						
	LOCAL CHANNEL - DEDICATED TRANSPORT															
	Local Channel - Dedicated - 2-Wire Voice Grade per month			OHM	TEFV2	7.91	120.95	53.24	46.35	13.35						
	Local Channel - Dedicated - 4-Wire Voice Grade per month			OHM	TEFV4	8.90	125.50	54.38	46.35	13.35						
	Local Channel - Dedicated - DS1 per month			OH1	TEFHG	22.82	149.31	111.09	40.32	26.09						
	Local Channel - Dedicated - DS3 Facility Termination per month			OH3	TEFHJ	150.05	444.58	145.04	112.80	75.81						
	LOCAL INTERCONNECTION MID-SPAN MEET															
	Local Channel - Dedicated - DS1 per month			OH1MS	TEFHG	0.00	0.00									
	Local Channel - Dedicated - DS3 per month			OH3MS	TEFHJ	0.00	0.00									
	MULTIPLEXERS															
	Channelization - DS1 to DS0 Channel System			OH1, OH1MS	SATN1	71.23	105.57	41.545	23.73	4.19						
	DS3 to DS1 Channel System per month			OH3, OH3MS	SATNS	124.39	224.255	71.76	39.965	31.035						
	DS3 Interface Unit (DS1 COCI) per month			OH1, OH1MS	SATCO	7.50	15.79	11.375	6.60	6.60						
	Notes: If no rate is identified in the contract, the rates, terms, and conditions for the specific service or function will be as set forth in applicable BellSouth tariff.															
SIGNALING (CCS7)																
	NOTE:"bk" beside a rate indicates that the parties have agreed to bill and keep for that element pursuant to the terms and conditions in Attachment 3.															
	CCS7 Signaling Connection, Per 56Kbps Facility A-Link DS1			UDB	TPP6A	8.93	34.74	34.74	16.90	16.90						
	CCS7 Signaling Connection, Per 56Kbps Facility A-Link DS3			UDB	TPP9A	8.93	34.74	34.74	16.90	16.90						
	CCS7 Signaling Connection, Per 56Kbps Facility B-Link DS1			UDB	TPP6B	8.93	34.74	34.74	16.90	16.90						
	CCS7 Signaling Connection, Per 56Kbps Facility B-Link DS3			UDB	TPP9B	8.93	34.74	34.74	16.90	16.90						
	CCS7 Signaling Termination, Per STP Port			UDB	PT8SX	111.30										

LOCAL INTERCONNECTION - Georgia																	Att: 3 Exh: A
CATEGORY		RATE ELEMENTS	Interim	Zone	BCS	USOC	RATES($)					Svc Order Submitted Elec per LSR	Svc Order Submitted Manually per LSR	Incremental Charge - Manual Svc Order vs. Electronic-1st	Incremental Charge - Manual Svc Order vs. Electronic-Add'l	Incremental Charge - Manual Svc Order vs. Electronic-Disc 1st	Incremental Charge - Manual Svc Order vs. Electronic-Disc Add'l
							Rec	Nonrecurring		Nonrecurring Disconnect		OSS Rates($)					
								First	Add'l	First	Add'l	SOMEC	SOMAN	SOMAN	SOMAN	SOMAN	SOMAN
		CCS7 Signaling Usage, Per Call Setup Message					.0000134bk										
		CCS7 Signaling Usage, Per TCAP Message					0.0000536										
		CCS7 Signaling Usage, Per ISUP Message (same as E.3.3)					.0000134bk										
		CCS7 Signaling Usage Surrogate, per link			UDB	STU56	921.93bk										
		CCS7 Signaling Point Code, Establishment or Change, per STP affected			UDB	CCAPO		28.12	28.12	33.29	33.29						
		CCS7 Signaling Connection, Switched access service, interface groups, transmissiom paths 6 DS1 level path with bit stream signaling			UDB	TPP6X	8.93	34.74	34.74	16.90	16.90						
		CCS7 Signaling Connection, Switched access service, interface groups, transmissiom paths 9 DS3 level path with bit stream signaling			UDB	TPP9X	8.93	34.74	34.74	16.90	16.90						

LOCAL INTERCONNECTION - Kentucky

Att: 3 Exh: A

CATEGORY	RATE ELEMENTS	Interim	Zone	BCS	USOC	RATES($) Rec	Nonrecurring First	Nonrecurring Add'l	Nonrecurring Disconnect First	Nonrecurring Disconnect Add'l	Svc Order Submitted Elec per LSR	Svc Order Submitted Manually per LSR	Incremental Charge - Manual Svc Order vs. Electronic-1st	Incremental Charge - Manual Svc Order vs. Electronic-Add'l	Incremental Charge - Manual Svc Order vs. Electronic-Disc 1st	Incremental Charge - Manual Svc Order vs. Electronic-Disc Add'l
											OSS Rates($)					
							First	Add'l	First	Add'l	SOMEC	SOMAN	SOMAN	SOMAN	SOMAN	SOMAN
LOCAL INTERCONNECTION (CALL TRANSPORT AND TERMINATION)																
	NOTE: "bk" beside a rate indicates that the Parties have agreed to bill and keep for that element pursuant to the terms and conditions in Attachment 3.															
	TANDEM SWITCHING															
	Tandem Switching Function Per MOU					0.0006772bk										
	Multiple Tandem Switching, per MOU (applies to intial tandem only)					0.0006772										
	Tandem Intermediary Charge, per MOU* (Effective through 6/29/2010)					0.0015000										
	Tandem Intermediary Charge, per MOU* (Effective beginning 6/30/2010)					0.0025										
	*** This charge is applicable only to transit traffic and is applied in addition to applicable switching and/or interconnection charges.**															
	TRUNK CHARGE															
	Installation Trunk Side Service - per DS0			OHD	TPP6X		21.58	8.13								
	Installation Trunk Side Service - per DS0			OHD	TPP9X		21.58	8.13								
	Dedicated End Office Trunk Port Service-per DS0**			OHD	TDEOP	0.00										
	Dedicated End Office Trunk Port Service-per DS1**			OH1 OH1MS	TDE1P	0.00										
	Dedicated Tandem Trunk Port Service-per DS0**			OHD	TDWOP	0.00										
	Dedicated Tandem Trunk Port Service-per DS1**			OH1 OH1MS	TDW1P	0.00										
	**** This rate element is recovered on a per MOU basis and is included in the End Office Switching and Tandem Switching, per MOU rate elements**															
	COMMON TRANSPORT (Shared)															
	Common Transport - Per Mile, Per MOU					0.0000030bk										
	Common Transport - Facilities Termination Per MOU					0.0007466bk										
LOCAL INTERCONNECTION (DEDICATED TRANSPORT)																
	INTEROFFICE CHANNEL - DEDICATED TRANSPORT															
	Interoffice Channel - Dedicated Transport - 2-Wire Voice Grade - Per Mile per month			OHM	1L5NF	0.01										
	Interoffice Channel - Dedicated Transport- 2- Wire Voice Grade - Facility Termination per month			OHM	1L5NF	29.11	47.34	31.78	22.77	8.75						
	Interoffice Channel - Dedicated Transport - 56 kbps - per mile per month			OHM	1L5NK	0.0115										
	Interoffice Channel - Dedicated Transport - 56 kbps - Facility Termination per month			OHM	1L5NK	20.97	47.35	31.78	22.77	8.75						
	Interoffice Channel - Dedicated Transport - 64 kbps - per mile per month			OHM	1L5NK	0.0115										
	Interoffice Channel - Dedicated Transport - 64 kbps - Facility Termination per month			OHM	1L5NK	20.97	47.35	31.78	22.77	8.75						
	Interoffice Channel - Dedicated Channel - DS1 - Per Mile per month			OH1, OH1MS	1L5NL	0.23										
	Interoffice Channel - Dedicated Tranport - DS1 - Facility Termination per month			OH1, OH1MS	1L5NL	96.04	105.52	98.46	23.09	20.49						
	Interoffice Channel - Dedicated Transport - DS3 - Per Mile per month			OH3, OH3MS	1L5NM	4.97										
	Interoffice Channel - Dedicated Transport - DS3 - Facility Termination per month			OH3, OH3MS	1L5NM	1,175.15	335.40	219.24	89.57	87.75						
	LOCAL CHANNEL - DEDICATED TRANSPORT															
	Local Channel - Dedicated - 2-Wire Voice Grade per month			OHM	TEFV2	18.57	265.78	46.96	46.79	4.98						
	Local Channel - Dedicated - 4-Wire Voice Grade per month			OHM	TEFV4	19.86	266.48	47.65	47.54	5.73						
	Local Channel - Dedicated - DS1 per month			OH1	TEFHG	40.46	209.60	176.51	30.21	21.07						
	Local Channel - Dedicated - DS3 Facility Termination per month			OH3	TEFHJ	576.05	551.38	338.08	173.00	120.42						
	LOCAL INTERCONNECTION MID-SPAN MEET															
	Local Channel - Dedicated - DS1 per month			OH1MS	TEFHG	0.00	0.00									
	Local Channel - Dedicated - DS3 per month			OH3MS	TEFHJ	0.00	0.00									
	MULTIPLEXERS															
	Channelization - DS1 to DS0 Channel System			OH1, OH1MS	SATN1	113.33	101.40	71.60	13.79	13.04						
	DS3 to DS1 Channel System per month			OH3, OH3MS	SATNS	158.20	199.23	118.62	50.16	48.59						
	DS3 Interface Unit (DS1 COCI) per month			OH1, OH1MS	SATCO	11.80	10.07	7.08								
	Notes: If no rate is identified in the contract, the rates, terms, and conditions for the specific service or function will be as set forth in applicable BellSouth tariff.															
SIGNALING (CCS7)																
	NOTE:"bk" beside a rate indicates that the parties have agreed to bill and keep for that element pursuant to the terms and conditions in Attachment 3.															
	CCS7 Signaling Connection, Per 56Kbps Facility A-Link DS1			UDB	TPP6A	20.71	43.56	43.56	22.45	22.45						
	CCS7 Signaling Connection, Per 56Kbps Facility A-Link DS3			UDB	TPP9A	20.71	43.56	43.56	22.45	22.45						
	CCS7 Signaling Connection, Per 56Kbps Facility B-Link DS1			UDB	TPP6B	20.71	43.56	43.56	22.45	22.45						

LOCAL INTERCONNECTION - Kentucky																	Att: 3 Exh: A
CATEGORY		RATE ELEMENTS	Interim	Zone	BCS	USOC	RATES($)					Svc Order Submitted Elec per LSR	Svc Order Submitted Manually per LSR	Incremental Charge - Manual Svc Order vs. Electronic-1st	Incremental Charge - Manual Svc Order vs. Electronic-Add'l	Incremental Charge - Manual Svc Order vs. Electronic-Disc 1st	Incremental Charge - Manual Svc Order vs. Electronic-Disc Add'l
							Rec	Nonrecurring		Nonrecurring Disconnect		OSS Rates($)					
								First	Add'l	First	Add'l	SOMEC	SOMAN	SOMAN	SOMAN	SOMAN	SOMAN
		CCS7 Signaling Connection, Per 56Kbps Facility B-Link DS3			UDB	TPP9B	20.71	43.56	43.56	22.45	22.45						
		CCS7 Signaling Termination, Per STP Port			UDB	PT8SX	151.39										
		CCS7 Signaling Usage, Per Call Setup Message					0.0000164bk										
		CCS7 Signaling Usage, Per TCAP Message					0.0000656										
		CCS7 Signaling Usage, Per ISUP Message					0.0000164bk										
		CCS7 Signaling Usage Surrogate, per link per LATA			UDB	STU56	751.08bk										
		CCS7 Signaling Point Code, per Originating Point Code Establishment or Change, per STP affected			UDB	CCAPO		46.02	46.02	56.43	56.43						
		CCS7 Signaling Point Code, per Destination Point Code Establishment or Change, Per Stp Affected			UDB	CCAPD		46.02	46.02	56.43	56.43						
		CCS7 Signaling Connection, Switched access service, interface groups, transmissiom paths 6 DS1 level path with bit stream signaling			UDB	TPP6X	20.71	43.56	43.56	22.45	22.45						
		CCS7 Signaling Connection, Switched access service, interface groups, transmissiom paths 9 DS3 level path with bit stream signaling			UDB	TPP9X	20.71	43.56	43.56	22.45	22.45						

LOCAL INTERCONNECTION - Louisiana

Att: 3 Exh: A

CATEGORY	RATE ELEMENTS	Interim	Zone	BCS	USOC	RATES($) Rec	Nonrecurring First	Nonrecurring Add'l	Nonrecurring Disconnect First	Nonrecurring Disconnect Add'l	Svc Order Submitted Elec per LSR	Svc Order Submitted Manually per LSR	Incremental Charge - Manual Svc Order vs. Electronic-1st	Incremental Charge - Manual Svc Order vs. Electronic-Add'l	Incremental Charge - Manual Svc Order vs. Electronic-Disc 1st	Incremental Charge - Manual Svc Order vs. Electronic-Disc Add'l
											OSS Rates($)					
							First	Add'l	First	Add'l	SOMEC	SOMAN	SOMAN	SOMAN	SOMAN	SOMAN
LOCAL INTERCONNECTION (CALL TRANSPORT AND TERMINATION)																
	NOTE: "bk" beside a rate indicates that the Parties have agreed to bill and keep for that element pursuant to the terms and conditions in Attachment 3.															
	TANDEM SWITCHING															
	Tandem Switching Function Per MOU					0.0005507bk										
	Multiple Tandem Switching, per MOU (applies to intial tandem only)					0.0005507										
	Tandem Intermediary Charge, per MOU* (Effective through 6/29/2010)					0.0015000										
	Tandem Intermediary Charge, per MOU* (Effective beginning 6/30/2010)					0.0025										
	*** This charge is applicable only to transit traffic and is applied in addition to applicable switching and/or interconnection charges.**															
	TRUNK CHARGE															
	Installation Trunk Side Service - per DS0			OHD	TPP6X		21.64	8.15								
	Installation Trunk Side Service - per DS0			OHD	TPP9X		21.64	8.15								
	Dedicated End Office Trunk Port Service-per DS0**			OHD	TDEOP	0.00										
	Dedicated End Office Trunk Port Service-per DS1**			OH1 OH1MS	TDE1P	0.00										
	Dedicated Tandem Trunk Port Service-per DS0**			OHD	TDWOP	0.00										
	Dedicated Tandem Trunk Port Service-per DS1**			OH1 OH1MS	TDW1P	0.00										
	**** This rate element is recovered on a per MOU basis and is included in the End Office Switching and Tandem Switching, per MOU rate elements**															
	COMMON TRANSPORT (Shared)															
	Common Transport - Per Mile, Per MOU					0.0000032bk										
	Common Transport - Facilities Termination Per MOU					0.0003748bk										
LOCAL INTERCONNECTION (DEDICATED TRANSPORT)																
	INTEROFFICE CHANNEL - DEDICATED TRANSPORT															
	Interoffice Channel - Dedicated Transport - 2-Wire Voice Grade - Per Mile per month			OHM	1L5NF	0.013										
	Interoffice Channel - Dedicated Transport- 2- Wire Voice Grade - Facility Termination per month			OHM	1L5NF	22.60	39.36	26.62								
	Interoffice Channel - Dedicated Transport - 56 kbps - per mile per month			OHM	1L5NK	0.013										
	Interoffice Channel - Dedicated Transport - 56 kbps - Facility Termination per month			OHM	1L5NK	15.61	39.37	26.62								
	Interoffice Channel - Dedicated Transport - 64 kbps - per mile per month			OHM	1L5NK	0.013										
	Interoffice Channel - Dedicated Transport - 64 kbps - Facility Termination per month			OHM	1L5NK	15.61	39.37	26.62								
	Interoffice Channel - Dedicated Channel - DS1 - Per Mile per month			OH1, OH1MS	1L5NL	0.2652										
	Interoffice Channel - Dedicated Tranport - DS1 - Facility Termination per month			OH1, OH1MS	1L5NL	70.47	86.69	79.44								
	Interoffice Channel - Dedicated Transport - DS3 - Per Mile per month			OH3, OH3MS	1L5NM	6.04										
	Interoffice Channel - Dedicated Transport - DS3 - Facility Termination per month			OH3, OH3MS	1L5NM	850.45	270.69	158.05								
	LOCAL CHANNEL - DEDICATED TRANSPORT															
	Local Channel - Dedicated - 2-Wire Voice Grade per month			OHM	TEFV2	18.32	187.51	32.21								
	Local Channel - Dedicated - 4-Wire Voice Grade per month			OHM	TEFV4	19.41	187.94	32.63								
	Local Channel - Dedicated - DS1 per month			OH1	TEFHG	39.18	172.34	149.27								
	Local Channel - Dedicated - DS3 Facility Termination per month			OH3	TEFHJ	469.44	438.46	256.30								
	LOCAL INTERCONNECTION MID-SPAN MEET															
	Local Channel - Dedicated - DS1 per month			OH1MS	TEFHG	0.00	0.00									
	Local Channel - Dedicated - DS3 per month			OH3MS	TEFHJ	0.00	0.00									
	MULTIPLEXERS															
	Channelization - DS1 to DS0 Channel System			OH1, OH1MS	SATN1	105.09	88.41	60.76								
	DS3 to DS1 Channel System per month			OH3, OH3MS	SATNS	201.48	172.99	91.25								
	DS3 Interface Unit (DS1 COCI) per month			OH1, OH1MS	SATCO	11.78	6.39	4.58								
	Notes: If no rate is identified in the contract, the rates, terms, and conditions for the specific service or function will be as set forth in applicable BellSouth tariff.															
SIGNALING (CCS7)																
	NOTE:"bk" beside a rate indicates that the parties have agreed to bill and keep for that element pursuant to the terms and conditions in Attachment 3.															
	CCS7 Signaling Termination, Per STP Port			UDB	PT8SX	147.60										
	CCS7 Signaling Usage, Per TCAP Message					0.000064										
	CCS7 Signaling Connection, Per DS1 level link (A link)			UDB	TPP6A	15.77	34.50	34.50								

LOCAL INTERCONNECTION - Louisiana																	Att: 3 Exh: A
CATEGORY		RATE ELEMENTS	Interim	Zone	BCS	USOC	RATES($)					Svc Order Submitted Elec per LSR	Svc Order Submitted Manually per LSR	Incremental Charge - Manual Svc Order vs. Electronic-1st	Incremental Charge - Manual Svc Order vs. Electronic-Add'l	Incremental Charge - Manual Svc Order vs. Electronic-Disc 1st	Incremental Charge - Manual Svc Order vs. Electronic-Disc Add'l
							Rec	Nonrecurring		Nonrecurring Disconnect		OSS Rates($)					
								First	Add'l	First	Add'l	SOMEC	SOMAN	SOMAN	SOMAN	SOMAN	SOMAN
		CCS7 Signaling Connection, Per DS3 level link (A link)			UDB	TPP9A	15.77	34.50	34.50								
		CCS7 Signaling Connection, Per DS1 level link (B link) (also known as D link)			UDB	TPP6B	15.77	34.50	34.50								
		CCS7 Signaling Connection, Per DS3 level link (B link) (also known as D link)			UDB	TPP9B	15.77	34.50	34.50								
		CCS7 Signaling Usage, Per ISUP Message					0.000016bk										
		CCS7 Signaling Usage Surrogate, per link per LATA			UDB	STU56	732.1bk										
		CCS7 Signaling Point Code, per Originating Point Code Establishment or Change, per STP affected			UDB	CCAPO		28.17	28.17								
		CCS7 Signaling Point Code, per Destination Point Code Establishment or Change, Per Stp Affected			UDB	CCAPD		28.17	28.17								
		CCS7 Signaling Connection, Switched access service, interface groups, transmissiom paths 6 DS1 level path with bit stream signaling			UDB	TPP6X	15.77	34.50	34.50								
		CCS7 Signaling Connection, Switched access service, interface groups, transmissiom paths 9 DS3 level path with bit stream signaling			UDB	TPP9X	15.77	34.50	34.50								

LOCAL INTERCONNECTION - Mississippi

Att: 3 Exh: A

CATEGORY	RATE ELEMENTS	Interim	Zone	BCS	USOC	RATES($) Rec	Nonrecurring First	Nonrecurring Add'l	Nonrecurring Disconnect First	Nonrecurring Disconnect Add'l	Svc Order Submitted Elec per LSR	Svc Order Submitted Manually per LSR	Incremental Charge - Manual Svc Order vs. Electronic-1st	Incremental Charge - Manual Svc Order vs. Electronic-Add'l	Incremental Charge - Manual Svc Order vs. Electronic-Disc 1st	Incremental Charge - Manual Svc Order vs. Electronic-Disc Add'l
											OSS Rates($)					
							First	Add'l	First	Add'l	SOMEC	SOMAN	SOMAN	SOMAN	SOMAN	SOMAN
LOCAL INTERCONNECTION (CALL TRANSPORT AND TERMINATION)																
	NOTE: "bk" beside a rate indicates that the Parties have agreed to bill and keep for that element pursuant to the terms and conditions in Attachment 3.															
	TANDEM SWITCHING															
	Tandem Switching Function Per MOU					0.0005379bk										
	Multiple Tandem Switching, per MOU (applies to intial tandem only)					0.0005379										
	Tandem Intermediary Charge, per MOU* (Effective beginning 6/30/2010)					0.0025										
	*** This charge is applicable only to transit traffic and is applied in addition to applicable switching and/or interconnection charges.**															
	TRUNK CHARGE															
	Installation Trunk Side Service - per DS0			OHD	TPP6X		21.58	8.13								
	Installation Trunk Side Service - per DS0			OHD	TPP9X		21.58	8.13								
	Dedicated End Office Trunk Port Service-per DS0**			OHD	TDEOP	0.00										
	Dedicated End Office Trunk Port Service-per DS1**			OH1 OH1MS	TDE1P	0.00										
	Dedicated Tandem Trunk Port Service-per DS0**			OHD	TDWOP	0.00										
	Dedicated Tandem Trunk Port Service-per DS1**			OH1 OH1MS	TDW1P	0.00										
	**** This rate element is recovered on a per MOU basis and is included in the End Office Switching and Tandem Switching, per MOU rate elements**															
	COMMON TRANSPORT (Shared)															
	Common Transport - Per Mile, Per MOU					0.0000026bk										
	Common Transport - Facilities Termination Per MOU					0.0004541bk										
LOCAL INTERCONNECTION (DEDICATED TRANSPORT)																
	INTEROFFICE CHANNEL - DEDICATED TRANSPORT															
	Interoffice Channel - Dedicated Transport - 2-Wire Voice Grade - Per Mile per month			OHM	1L5NF	0.0098										
	Interoffice Channel - Dedicated Transport- 2- Wire Voice Grade - Facility Termination per month			OHM	1L5NF	22.52	40.77	27.57	17.26	7.11						
	Interoffice Channel - Dedicated Transport - 56 kbps - per mile per month			OHM	1L5NK	0.0098										
	Interoffice Channel - Dedicated Transport - 56 kbps - Facility Termination per month			OHM	1L5NK	15.68	40.78	27.57	17.26	7.11						
	Interoffice Channel - Dedicated Transport - 64 kbps - per mile per month			OHM	1L5NK	0.0098										
	Interoffice Channel - Dedicated Transport - 64 kbps - Facility Termination per month			OHM	1L5NK	15.68	40.78	27.57	17.26	7.11						
	Interoffice Channel - Dedicated Channel - DS1 - Per Mile per month			OH1, OH1MS	1L5NL	0.201										
	Interoffice Channel - Dedicated Tranport - DS1 - Facility Termination per month			OH1, OH1MS	1L5NL	57.33	89.79	82.28	16.86	14.90						
	Interoffice Channel - Dedicated Transport - DS3 - Per Mile per month			OH3, OH3MS	1L5NM	4.76										
	Interoffice Channel - Dedicated Transport - DS3 - Facility Termination per month			OH3, OH3MS	1L5NM	641.90	280.37	163.70	62.08	60.29						
	LOCAL CHANNEL - DEDICATED TRANSPORT															
	Local Channel - Dedicated - 2-Wire Voice Grade per month			OHM	TEFV2	14.91	194.22	33.36	37.79	3.30						
	Local Channel - Dedicated - 4-Wire Voice Grade per month			OHM	TEFV4	15.99	194.66	33.80	38.27	3.78						
	Local Channel - Dedicated - DS1 per month			OH1	TEFHG	36.83	178.50	154.61	22.89	15.74						
	Local Channel - Dedicated - DS3 Facility Termination per month			OH3	TEFHJ	413.87	454.13	264.47	123.23	86.19						
	LOCAL INTERCONNECTION MID-SPAN MEET															
	Local Channel - Dedicated - DS1 per month			OH1MS	TEFHG	0.00	0.00									
	Local Channel - Dedicated - DS3 per month			OH3MS	TEFHJ	0.00	0.00									
	MULTIPLEXERS															
	Channelization - DS1 to DS0 Channel System			OH1, OH1MS	SATN1	102.85	91.57	62.94	10.87	10.10						
	DS3 to DS1 Channel System per month			OH3, OH3MS	SATNS	170.63	179.17	94.52	34.30	32.82						
	DS3 Interface Unit (DS1 COCI) per month			OH1, OH1MS	SATCO	12.96	6.62	4.74								
	Notes: If no rate is identified in the contract, the rates, terms, and conditions for the specific service or function will be as set forth in applicable BellSouth tariff.															
SIGNALING (CCS7)																
	NOTE:"bk" beside a rate indicates that the parties have agreed to bill and keep for that element pursuant to the terms and conditions in Attachment 3.															
	CCS7 Signaling Termination, Per STP Port			UDB	PT8SX	132.21										
	CCS7 Signaling Usage, Per TCAP Message					0.0000597										
	CCS7 Signaling Connection, Per DS1 level link (A link)			UDB	TPP6A	16.55	35.74	35.74	16.53	16.53						
	CCS7 Signaling Connection, Per DS3 level link (A link)			UDB	TPP9A	16.55	35.74	35.74	16.53	16.53						

LOCAL INTERCONNECTION - Mississippi															Att: 3 Exh: A			
CATEGORY		RATE ELEMENTS	Interim	Zone	BCS	USOC	RATES($)					Svc Order Submitted Elec per LSR	Svc Order Submitted Manually per LSR	Incremental Charge - Manual Svc Order vs. Electronic-1st	Incremental Charge - Manual Svc Order vs. Electronic-Add'l	Incremental Charge - Manual Svc Order vs. Electronic-Disc 1st	Incremental Charge - Manual Svc Order vs. Electronic-Disc Add'l
							Rec	Nonrecurring		Nonrecurring Disconnect		OSS Rates($)					
								First	Add'l	First	Add'l	SOMEC	SOMAN	SOMAN	SOMAN	SOMAN	SOMAN
		CCS7 Signaling Connection, Per DS1 level link (B link) (also known as D link)			UDB	TPP6B	16.55	35.74	35.74	16.53	16.53						
		CCS7 Signaling Connection, Per DS3 level link (B link) (also known as D link)			UDB	TPP9B	16.55	35.74	35.74	16.53	16.53						
		CCS7 Signaling Usage, Per ISUP Message					0.0000149bk										
		CCS7 Signaling Usage Surrogate, per link per LATA			UDB	STU56	683.55bk										
		CCS7 Signaling Point Code, per Originating Point Code Establishment or Change, per STP affected			UDB	CCAPO		29.18	29.18	35.78	35.78						
		CCS7 Signaling Point Code, per Destination Point Code Establishment or Change, Per Stp Affected			UDB	CCAPD											
		CCS7 Signaling Connection, Switched access service, interface groups, transmissiom paths 6 DS1 level path with bit stream signaling			UDB	TPP6X	16.55	35.74	35.74	16.53	16.53						
		CCS7 Signaling Connection, Switched access service, interface groups, transmissiom paths 9 DS3 level path with bit stream signaling			UDB	TPP9X	16.55	35.74	35.74	16.53	16.53						

LOCAL INTERCONNECTION - North Carolina

Att: 3 Exh: A

CATEGORY	RATE ELEMENTS	Interim	Zone	BCS	USOC	RATES($) Rec	Nonrecurring First	Nonrecurring Add'l	Nonrecurring Disconnect First	Nonrecurring Disconnect Add'l	Svc Order Submitted Elec per LSR	Svc Order Submitted Manually per LSR	Incremental Charge - Manual Svc Order vs. Electronic-1st	Incremental Charge - Manual Svc Order vs. Electronic-Add'l	Incremental Charge - Manual Svc Order vs. Electronic-Disc 1st	Incremental Charge - Manual Svc Order vs. Electronic-Disc Add'l
											OSS Rates($)					
							First	Add'l	First	Add'l	SOMEC	SOMAN	SOMAN	SOMAN	SOMAN	SOMAN
LOCAL INTERCONNECTION (CALL TRANSPORT AND TERMINATION)																
	NOTE: "bk" beside a rate indicates that the Parties have agreed to bill and keep for that element pursuant to the terms and conditions in Attachment 3.															
	TANDEM SWITCHING															
	Tandem Switching Function Per MOU					0.0004788bk										
	Multiple Tandem Switching, per MOU (applies to intial tandem only)					0.0004788										
	Tandem Intermediary Charge, per MOU* (Effective through 6/29/2010)					0.0015000										
	Tandem Intermediary Charge, per MOU* (Effective beginning 6/30/2010)					0.0025										
	*** This charge is applicable only to transit traffic and is applied in addition to applicable switching and/or interconnection charges.**															
	TRUNK CHARGE															
	Installation Trunk Side Service - per DS0			OHD	TPP6X		21.55	8.12								
	Installation Trunk Side Service - per DS0			OHD	TPP9X		21.55	8.12								
	Dedicated End Office Trunk Port Service-per DS0**			OHD	TDEOP	0.00										
	Dedicated End Office Trunk Port Service-per DS1**			OH1 OH1MS	TDE1P	0.00										
	Dedicated Tandem Trunk Port Service-per DS0**			OHD	TDWOP	0.00										
	Dedicated Tandem Trunk Port Service-per DS1**			OH1 OH1MS	TDW1P	0.00										
	**** This rate element is recovered on a per MOU basis and is included in the End Office Switching and Tandem Switching, per MOU rate elements**															
	COMMON TRANSPORT (Shared)															
	Common Transport - Per Mile, Per MOU					0.0000023bk										
	Common Transport - Facilities Termination Per MOU					0.0001676bk										
LOCAL INTERCONNECTION (DEDICATED TRANSPORT)																
	INTEROFFICE CHANNEL - DEDICATED TRANSPORT															
	Interoffice Channel - Dedicated Transport - 2-Wire Voice Grade - Per Mile per month			OHM	1L5NF	0.0095										
	Interoffice Channel - Dedicated Transport- 2- Wire Voice Grade - Facility Termination per month			OHM	1L5NF	12.12	39.36	26.62								
	Interoffice Channel - Dedicated Transport - 56 kbps - per mile per month			OHM	1L5NK	0.0095										
	Interoffice Channel - Dedicated Transport - 56 kbps - Facility Termination per month			OHM	1L5NK	7.47	39.37	26.62								
	Interoffice Channel - Dedicated Transport - 64 kbps - per mile per month			OHM	1L5NK	0.0095										
	Interoffice Channel - Dedicated Transport - 64 kbps - Facility Termination per month			OHM	1L5NK	7.47	39.37	26.62								
	Interoffice Channel - Dedicated Channel - DS1 - Per Mile per month			OH1, OH1MS	1L5NL	0.1938										
	Interoffice Channel - Dedicated Tranport - DS1 - Facility Termination per month			OH1, OH1MS	1L5NL	31.19	86.69	79.44								
	Interoffice Channel - Dedicated Transport - DS3 - Per Mile per month			OH3, OH3MS	1L5NM	4.44										
	Interoffice Channel - Dedicated Transport - DS3 - Facility Termination per month			OH3, OH3MS	1L5NM	329.91	270.69	158.05								
	LOCAL CHANNEL - DEDICATED TRANSPORT															
	Local Channel - Dedicated - 2-Wire Voice Grade per month			OHM	TEFV2	6.29	187.51	32.21								
	Local Channel - Dedicated - 4-Wire Voice Grade per month			OHM	TEFV4	7.08	187.94	32.63								
	Local Channel - Dedicated - DS1 per month			OH1	TEFHG	22.13	172.34	149.27								
	Local Channel - Dedicated - DS3 Facility Termination per month			OH3	TEFHJ	82.89	438.46	256.30								
	LOCAL INTERCONNECTION MID-SPAN MEET															
	Local Channel - Dedicated - DS1 per month			OH1MS	TEFHG	0.00	0.00									
	Local Channel - Dedicated - DS3 per month			OH3MS	TEFHJ	0.00	0.00									
	MULTIPLEXERS															
	Channelization - DS1 to DS0 Channel System			OH1, OH1MS	SATN1	146.69	197.78	140.06								
	DS3 to DS1 Channel System per month			OH3, OH3MS	SATNS	233.10	403.97	234.40								
	DS3 Interface Unit (DS1 COCI) per month			OH1, OH1MS	SATCO	16.07	13.09	9.38								
	Notes: If no rate is identified in the contract, the rates, terms, and conditions for the specific service or function will be as set forth in applicable BellSouth tariff.															
SIGNALING (CCS7)																
	NOTE:"bk" beside a rate indicates that the parties have agreed to bill and keep for that element pursuant to the terms and conditions in Attachment 3.															
	CCS7 Signaling Connection, Per DS1 level link (A link)			UDB	TPP6A	8.13	34.50	34.50								
	CCS7 Signaling Connection, Per DS3 level link (A link)			UDB	TPP9A	8.13	34.50	34.50								

LOCAL INTERCONNECTION - North Carolina																	Att: 3 Exh: A
CATEGORY		RATE ELEMENTS	Interim	Zone	BCS	USOC	RATES($)					Svc Order Submitted Elec per LSR	Svc Order Submitted Manually per LSR	Incremental Charge - Manual Svc Order vs. Electronic-1st	Incremental Charge - Manual Svc Order vs. Electronic-Add'l	Incremental Charge - Manual Svc Order vs. Electronic-Disc 1st	Incremental Charge - Manual Svc Order vs. Electronic-Disc Add'l
							Rec	Nonrecurring		Nonrecurring Disconnect		OSS Rates($)					
								First	Add'l	First	Add'l	SOMEC	SOMAN	SOMAN	SOMAN	SOMAN	SOMAN
		CCS7 Signaling Connection, Per DS1 level link (B link) (also known as D link)			UDB	TPP6B	8.13	34.50	34.50								
		CCS7 Signaling Connection, Per DS3 level link (B link) (also known as D link)			UDB	TPP9B	8.13	34.50	34.50								
		CCS7 Signaling Termination, Per STP Port			UDB	PT8SX	108.19										
		CCS7 Signaling Usage, Per ISUP Message					0.0000094bk										
		CCS7 Signaling Usage, Per TCAP Message					0.0000374										
		CCS7 Signaling Usage Surrogate, per link per LATA			UDB	STU56	644.04bk										
		CCS7 Signaling Point Code, per Originating Point Code Establishment or Change, per STP affected			UDB	CCAPO		55.77	55.77								
		CCS7 Signaling Point Code, per Destination Point Code Establishment or Change, Per Stp Affected			UDB	CCAPD		8.00	8.00								
		CCS7 Signaling Connection, Switched access service, interface groups, transmissiom paths 6 DS1 level path with bit stream signaling			UDB	TPP6X	8.13	34.50	34.50								
		CCS7 Signaling Connection, Switched access service, interface groups, transmissiom paths 9 DS3 level path with bit stream signaling			UDB	TPP9X	8.13	34.50	34.50								

LOCAL INTERCONNECTION - South Carolina

Att: 3 Exh: A

CATEGORY	RATE ELEMENTS	Interim	Zone	BCS	USOC	RATES($) Rec	Nonrecurring First	Nonrecurring Add'l	Nonrecurring Disconnect First	Nonrecurring Disconnect Add'l	Svc Order Submitted Elec per LSR	Svc Order Submitted Manually per LSR	Incremental Charge - Manual Svc Order vs. Electronic-1st	Incremental Charge - Manual Svc Order vs. Electronic-Add'l	Incremental Charge - Manual Svc Order vs. Electronic-Disc 1st	Incremental Charge - Manual Svc Order vs. Electronic-Disc Add'l
											OSS Rates($)					
							First	Add'l	First	Add'l	SOMEC	SOMAN	SOMAN	SOMAN	SOMAN	SOMAN
LOCAL INTERCONNECTION (CALL TRANSPORT AND TERMINATION)																
	NOTE: "bk" beside a rate indicates that the Parties have agreed to bill and keep for that element pursuant to the terms and conditions in Attachment 3.															
	TANDEM SWITCHING															
	Tandem Switching Function Per MOU					0.0007360bk										
	Multiple Tandem Switching, per MOU (applies to intial tandem only)					0.000736										
	Tandem Intermediary Charge, per MOU* (Effective through 6/29/2010)					0.001500										
	Tandem Intermediary Charge, per MOU* (Effective beginning 6/30/2010)					0.0025										
	*** This charge is applicable only to transit traffic and is applied in addition to applicable switching and/or interconnection charges.**															
	TRUNK CHARGE															
	Installation Trunk Side Service - per DS0			OHD	TPP6X		21.65	8.16								
	Installation Trunk Side Service - per DS0			OHD	TPP9X		21.65	8.16								
	Dedicated End Office Trunk Port Service-per DS0**			OHD	TDEOP	0.00										
	Dedicated End Office Trunk Port Service-per DS1**			OH1 OH1MS	TDE1P	0.00										
	Dedicated Tandem Trunk Port Service-per DS0**			OHD	TDWOP	0.00										
	Dedicated Tandem Trunk Port Service-per DS1**			OH1 OH1MS	TDW1P	0.00										
	**** This rate element is recovered on a per MOU basis and is included in the End Office Switching and Tandem Switching, per MOU rate elements**															
	COMMON TRANSPORT (Shared)															
	Common Transport - Per Mile, Per MOU					0.0000045bk										
	Common Transport - Facilities Termination Per MOU					0.0004095bk										
LOCAL INTERCONNECTION (DEDICATED TRANSPORT)																
	INTEROFFICE CHANNEL - DEDICATED TRANSPORT															
	Interoffice Channel - Dedicated Transport - 2-Wire Voice Grade - Per Mile per month			OHM	1L5NF	0.0167										
	Interoffice Channel - Dedicated Transport- 2- Wire Voice Grade - Facility Termination per month			OHM	1L5NF	24.30	40.63	27.47	16.77	6.91						
	Interoffice Channel - Dedicated Transport - 56 kbps - per mile per month			OHM	1L5NK	0.0167										
	Interoffice Channel - Dedicated Transport - 56 kbps - Facility Termination per month			OHM	1L5NK	16.76	40.63	27.47	16.77	6.91						
	Interoffice Channel - Dedicated Transport - 64 kbps - per mile per month			OHM	1L5NK	0.0167										
	Interoffice Channel - Dedicated Transport - 64 kbps - Facility Termination per month			OHM	1L5NK	16.76	40.63	27.47	16.77	6.91						
	Interoffice Channel - Dedicated Channel - DS1 - Per Mile per month			OH1, OH1MS	1L5NL	0.3415										
	Interoffice Channel - Dedicated Tranport - DS1 - Facility Termination per month			OH1, OH1MS	1L5NL	77.14	89.47	81.99	16.39	14.48						
	Interoffice Channel - Dedicated Transport - DS3 - Per Mile per month			OH3, OH3MS	1L5NM	8.02										
	Interoffice Channel - Dedicated Transport - DS3 - Facility Termination per month			OH3, OH3MS	1L5NM	880.65	279.37	163.12	60.33	58.59						
	LOCAL CHANNEL - DEDICATED TRANSPORT															
	Local Channel - Dedicated - 2-Wire Voice Grade per month			OHM	TEFV2	15.33	193.53	33.24	36.72	3.21						
	Local Channel - Dedicated - 4-Wire Voice Grade per month			OHM	TEFV4	16.54	193.97	33.68	37.19	3.68						
	Local Channel - Dedicated - DS1 per month			OH1	TEFHG	42.62	177.87	154.06	22.24	15.30						
	Local Channel - Dedicated - DS3 Facility Termination per month			OH3	TEFHJ	446.00	452.52	264.53	119.75	83.77						
	LOCAL INTERCONNECTION MID-SPAN MEET															
	Local Channel - Dedicated - DS1 per month			OH1MS	TEFHG	0.00	0.00									
	Local Channel - Dedicated - DS3 per month			OH3MS	TEFHJ	0.00	0.00									
	MULTIPLEXERS															
	Channelization - DS1 to DS0 Channel System			OH1, OH1MS	SATN1	107.57	91.24	62.71	10.56	9.81						
	DS3 to DS1 Channel System per month			OH3, OH3MS	SATNS	144.02	178.54	94.18	33.33	31.90						
	DS3 Interface Unit (DS1 COCI) per month			OH1, OH1MS	SATCO	8.64	6.59	4.73								
	Notes: If no rate is identified in the contract, the rates, terms, and conditions for the specific service or function will be as set forth in applicable BellSouth tariff.															
SIGNALING (CCS7)																
	NOTE:"bk" beside a rate indicates that the parties have agreed to bill and keep for that element pursuant to the terms and conditions in Attachment 3.															
	CCS7 Signaling Connection, Per 56Kbps Facility A-Link DS1			UDB	TPP6A	16.93	35.61	35.61	16.48	16.48						
	CCS7 Signaling Connection, Per 56Kbps Facility A-Link DS3			UDB	TPP9A	16.93	35.61	35.61	16.48	16.48						
	CCS7 Signaling Connection, Per 56Kbps Facility B-Link DS1			UDB	TPP6B	16.93	35.61	35.61	16.48	16.48						

LOCAL INTERCONNECTION - South Carolina																	Att: 3 Exh: A
CATEGORY		RATE ELEMENTS	Interim	Zone	BCS	USOC	RATES($)					Svc Order Submitted Elec per LSR	Svc Order Submitted Manually per LSR	Incremental Charge - Manual Svc Order vs. Electronic-1st	Incremental Charge - Manual Svc Order vs. Electronic-Add'l	Incremental Charge - Manual Svc Order vs. Electronic-Disc 1st	Incremental Charge - Manual Svc Order vs. Electronic-Disc Add'l
							Rec	Nonrecurring		Nonrecurring Disconnect		OSS Rates($)					
								First	Add'l	First	Add'l	SOMEC	SOMAN	SOMAN	SOMAN	SOMAN	SOMAN
		CCS7 Signaling Connection, Per 56Kbps Facility B-Link DS3			UDB	TPP9B	16.93	35.61	35.61	16.48	16.48						
		CCS7 Signaling Termination, Per STP Port			UDB	PT8SX	163.49										
		CCS7 Signaling Usage, Per TCAP Message					0.0000692										
		CCS7 Signaling Usage, Per ISUP Message					0.0000173bk										
		CCS7 Signaling Usage Surrogate, per link per LATA			UDB	STU56	791.37bk										
		CCS7 Signaling Point Code, per Originating Point Code Establishment or Change, per STP affected			UDB	CCAPO		29.08	29.08	35.65	35.65						
		CCS7 Signaling Point Code, per Destination Point Code Establishment or Change, Per Stp Affected			UDB	CCAPD		29.08	29.08	35.65	35.65						
		CCS7 Signaling Connection, Switched access service, interface groups, transmissiom paths 6 DS1 level path with bit stream signaling			UDB	TPP6X	16.93	35.61	35.61	16.48	16.48						
		CCS7 Signaling Connection, Switched access service, interface groups, transmissiom paths 9 DS3 level path with bit stream signaling			UDB	TPP9X	16.93	35.61	35.61	16.48	16.48						

LOCAL INTERCONNECTION - Tennessee

Att: 3 Exh: A

CATEGORY	RATE ELEMENTS	Interim	Zone	BCS	USOC	RATES($) Rec	Nonrecurring First	Nonrecurring Add'l	Nonrecurring Disconnect First	Nonrecurring Disconnect Add'l	Svc Order Submitted Elec per LSR	Svc Order Submitted Manually per LSR	Incremental Charge - Manual Svc Order vs. Electronic- 1st	Incremental Charge - Manual Svc Order vs. Electronic- Add'l	Incremental Charge - Manual Svc Order vs. Electronic- Disc 1st	Incremental Charge - Manual Svc Order vs. Electronic- Disc Add'l
											OSS Rates($)					
							First	Add'l	First	Add'l	SOMEC	SOMAN	SOMAN	SOMAN	SOMAN	SOMAN
LOCAL INTERCONNECTION (CALL TRANSPORT AND TERMINATION)																
	NOTE: "bk" beside a rate indicates that the Parties have agreed to bill and keep for that element pursuant to the terms and conditions in Attachment 3.															
	TANDEM SWITCHING															
	Tandem Switching Function Per MOU					0.0009778bk										
	Multiple Tandem Switching, per MOU (applies to intial tandem only)					0.0009778										
	Tandem Intermediary Charge, per MOU* (Effective through 6/29/2010)					0.0015000										
	Tandem Intermediary Charge, per MOU* (Effective beginning 6/30/2010)					0.0025										
	*** This charge is applicable only to transit traffic and is applied in addition to applicable switching and/or interconnection charges.**															
	TRUNK CHARGE															
	Installation Trunk Side Service - per DS0			OHD	TPP6X		21.59	8.09								
	Installation Trunk Side Service - per DS0			OHD	TPP9X		21.59	8.09								
	Dedicated End Office Trunk Port Service-per DS0**			OHD	TDEOP	0.00										
	Dedicated End Office Trunk Port Service-per DS1**			OH1 OH1MS	TDE1P	0.00										
	Dedicated Tandem Trunk Port Service-per DS0**			OHD	TDWOP	0.00										
	Dedicated Tandem Trunk Port Service-per DS1**			OH1 OH1MS	TDW1P	0.00										
	**** This rate element is recovered on a per MOU basis and is included in the End Office Switching and Tandem Switching, per MOU rate elements**															
	COMMON TRANSPORT (Shared)															
	Common Transport - Per Mile, Per MOU					0.0000064bk										
	Common Transport - Facilities Termination Per MOU					0.0003871bk										
LOCAL INTERCONNECTION (DEDICATED TRANSPORT)																
	INTEROFFICE CHANNEL - DEDICATED TRANSPORT															
	Interoffice Channel - Dedicated Transport - 2-Wire Voice Grade - Per Mile per month			OHM	1L5NF	0.0174										
	Interoffice Channel - Dedicated Transport- 2- Wire Voice Grade - Facility Termination per month			OHM	1L5NF	18.58	55.39	17.37	27.96	3.51						
	Interoffice Channel - Dedicated Transport - 56 kbps - per mile per month			OHM	1L5NK	0.0174										
	Interoffice Channel - Dedicated Transport - 56 kbps - Facility Termination per month			OHM	1L5NK	17.98	55.39	17.37	27.96	3.51						
	Interoffice Channel - Dedicated Transport - 64 kbps - per mile per month			OHM	1L5NK	0.0174										
	Interoffice Channel - Dedicated Transport - 64 kbps - Facility Termination per month			OHM	1L5NK	17.98	55.39	17.37	27.96	3.51						
	Interoffice Channel - Dedicated Channel - DS1 - Per Mile per month			OH1, OH1MS	1L5NL	0.3562										
	Interoffice Channel - Dedicated Tranport - DS1 - Facility Termination per month			OH1, OH1MS	1L5NL	77.86	112.40	76.27	19.55	14.99						
	Interoffice Channel - Dedicated Transport - DS3 - Per Mile per month			OH3, OH3MS	1L5NM	2.34										
	Interoffice Channel - Dedicated Transport - DS3 - Facility Termination per month			OH3, OH3MS	1L5NM	848.99	395.29	176.56	109.04	105.91						
	LOCAL CHANNEL - DEDICATED TRANSPORT															
	Local Channel - Dedicated - 2-Wire Voice Grade per month			OHM	TEFV2	15.29	199.33	24.16	54.81	4.80						
	Local Channel - Dedicated - 4-Wire Voice Grade per month			OHM	TEFV4	16.18	201.53	24.83	55.52	5.51						
	Local Channel - Dedicated - DS1 per month			OH1	TEFHG	32.25	277.35	233.26	33.18	22.30						
	Local Channel - Dedicated - DS3 Facility Termination per month			OH3	TEFHJ	611.30	595.37	304.50	215.82	151.15						
	LOCAL INTERCONNECTION MID-SPAN MEET															
	Local Channel - Dedicated - DS1 per month			OH1MS	TEFHG	0.00	0.00									
	Local Channel - Dedicated - DS3 per month			OH3MS	TEFHJ	0.00	0.00									
	MULTIPLEXERS															
	Channelization - DS1 to DS0 Channel System			OH1, OH1MS	SATN1	80.77	141.87	77.11	14.51	13.46						
	DS3 to DS1 Channel System per month			OH3, OH3MS	SATNS	222.98	308.03	108.47	44.47	42.62						
	DS3 Interface Unit (DS1 COCI) per month			OH1, OH1MS	SATCO	17.58	6.07	4.66								
	Notes: If no rate is identified in the contract, the rates, terms, and conditions for the specific service or function will be as set forth in applicable BellSouth tariff.															
SIGNALING (CCS7)																
	NOTE:"bk" beside a rate indicates that the parties have agreed to bill and keep for that element pursuant to the terms and conditions in Attachment 3.															
	CCS7 Signaling Termination, Per STP Port			UDB	PT8SX	138.41										
	CCS7 Signaling Usage, Per TCAP Message					0.0000916										
	CCS7 Signaling Connection, Per DS1 level link (A link)			UDB	TPP6A	17.84	130.84	130.84					20.35	0.00	0.00	0.00

LOCAL INTERCONNECTION - Tennessee																	Att: 3 Exh: A
CATEGORY		RATE ELEMENTS	Interim	Zone	BCS	USOC	RATES($)					Svc Order Submitted Elec per LSR	Svc Order Submitted Manually per LSR	Incremental Charge - Manual Svc Order vs. Electronic-1st	Incremental Charge - Manual Svc Order vs. Electronic-Add'l	Incremental Charge - Manual Svc Order vs. Electronic-Disc 1st	Incremental Charge - Manual Svc Order vs. Electronic-Disc Add'l
							Rec	Nonrecurring		Nonrecurring Disconnect		OSS Rates($)					
								First	Add'l	First	Add'l	SOMEC	SOMAN	SOMAN	SOMAN	SOMAN	SOMAN
		CCS7 Signaling Connection, Per DS3 level link (A link)			UDB	TPP9A	17.84	130.84	130.84					20.35	0.00	0.00	0.00
		CCS7 Signaling Connection, Per DS1 level link (B link) (also known as D link)			UDB	TPP6B	17.84	130.84	130.84					20.35	0.00	0.00	0.00
		CCS7 Signaling Connection, Per DS3 level link (B link) (also known as D link)			UDB	TPP9B	17.84	130.84	130.84					20.35	0.00	0.00	0.00
		CCS7 Signaling Usage, Per ISUP Message					0.0000373bk										
		CCS7 Signaling Usage Surrogate, per link per LATA			UDB	STU56	352.3bk										
		Signaling Point Code, per Originating Point Code Establishment or Change, per STP			UDB	CCAPO		121.77	121.77					20.35	0.00	0.00	0.00
		CCS7 Signaling Connection, Switched access service, interface groups, transmissiom paths 6 DS1 level path with bit stream signaling			UDB	TPP6X	17.84	130.84	130.84					20.35	0.00	0.00	0.00
		CCS7 Signaling Connection, Switched access service, interface groups, transmissiom paths 9 DS3 level path with bit stream signaling			UDB	TPP9X	17.84	130.84	130.84					20.35	0.00	0.00	0.00

Attachment 4

AT&T Southeast Collocation

Table of Contents

1. Scope of Attachment 3

2 Optional Reports 6

3 Collocation Options 7

4 Occupancy 12

5 Use of Collocation Space 14

6 Ordering and Preparation of Collocation Space 21

7 Construction and Provisioning 25

8 Rates and Charges 31

9 Insurance 39

10 Mechanics Lien 40

11 Inspections 41

12 Security and Safety Requirements 41

13 Destruction of Collocation Space 43

14 Eminent Domain 44

15 Nonexclusivity 44

Environmental & Safety Principles ..... Exhibit A

Tennessee Regulatory Authority (TRA) Offered Language and Rates ..... Exhibit C

Rates ..... Exhibit C

AT&T COLLOCATION

1. Scope of Attachment

1.1 AT&T Premises

1.1.1 The rates, terms and conditions contained within this Attachment shall only apply when Sprint is physically collocated as a sole occupant or as a Host within a AT&T Premises pursuant to this Attachment. AT&T Premises, as defined in this Attachment includes AT&T Central Offices, and Remote Terminals (hereinafter "AT&T Premises"). This Attachment is applicable to AT&T Premises owned or leased by AT&T. Where not specified, the language in this Attachment applies to both Central Office and Remote Site Collocation.

1.1.2 Third Party Property. If the AT&T Premises, or the property on which it is located, is leased by AT&T from a third party or otherwise controlled by a third party, special considerations and intervals may apply in addition to the terms and conditions of this Attachment. Additionally, where AT&T notifies Sprint that AT&T's agreement with a third party does not grant AT&T the ability to provide access and use rights to others, upon Sprint's request, AT&T will use commercially reasonable efforts to obtain the owner's consent and to otherwise secure such rights for Sprint. Sprint agrees to reimburse AT&T for all reasonable and customary costs incurred by AT&T in obtaining such rights for Sprint. Upon request from Sprint, AT&T will provide an estimate of costs that AT&T expects to incur in securing such rights. In cases where a third party agreement does not grant AT&T the right to provide access and use rights to others as contemplated by this Attachment and AT&T, is unable to secure such access and use rights for Sprint, Sprint shall be responsible for obtaining such permission to access and use such property. AT&T shall cooperate with Sprint in obtaining such permission.

1.2 Right to Occupy

1.2.1 AT&T shall offer to Sprint collocation on rates, terms and conditions that are just, reasonable, nondiscriminatory and consistent with the rules of the FCC. Subject to the rates, terms and conditions of this Attachment, where space is available and it is technically feasible, AT&T will allow Sprint to occupy a certain area designated by AT&T within a AT&T Premises, or on AT&T property upon which the AT&T Premises is located, of a size which is specified by Sprint and agreed to by AT&T (hereinafter "Collocation Space"). Except as otherwise specified, any references to Collocation Space shall be for physical collocation. The necessary rates, terms and conditions for a premises as defined by the FCC, other than AT&T Premises, shall be negotiated upon reasonable request for collocation at such premises.

1.2.2 Neither AT&T nor any of AT&T's affiliates may reserve space for future use on more preferential terms than those set forth in this Attachment.

1.2.2.1 In all states other than Florida, the size specified by Sprint may contemplate a request for space sufficient to accommodate Sprint's growth within a twenty-four (24) month period.

1.2.2.2 In the state of Florida, the size specified by Sprint may contemplate a request for space sufficient to accommodate Sprint's growth within an eighteen (18) month period.

1.3 Space Allocation. AT&T shall assign Sprint Collocation Space that utilizes existing infrastructure (e.g., heating, ventilation, air conditioning (HVAC), lighting and available power), if such space is available for collocation. Otherwise, AT&T shall attempt to accommodate Sprint's requested space preferences, if any, including the provision of contiguous space for any subsequent request for collocation. In allocating Collocation Space, AT&T shall not materially increase Sprint's cost or materially delay Sprint's occupation and use of the Collocation Space, assign Collocation Space that will impair the quality of service or otherwise limit the service Sprint wishes to offer, reduce unreasonably the total space available for physical collocation or preclude reasonable physical collocation within the AT&T Premises. Space shall not be available for collocation if it is: (a) physically occupied by non-obsolete equipment; (b) assigned to another collocated telecommunications carrier; (c) used to provide physical access to occupied space; (d) used to enable technicians to work on equipment located within occupied space; (e) properly reserved for future use, either by AT&T or another collocated telecommunications carrier; or (f) essential for the administration and proper functioning of the AT&T Premises. AT&T may segregate Collocation Space and require separate entrances for collocated telecommunications carriers to access their Collocation Space, pursuant to FCC Rules.

1.4 Transfer of Collocation Space

1.4.1 Sprint shall be allowed to transfer Collocation Space to another CLEC under the following conditions: (1) the AT&T Premises is not at or near space exhaustion; (2) the transfer of space shall be contingent upon AT&T's approval, which will not be unreasonably withheld; (3) Sprint has no unpaid, undisputed collocation charges; and (4) the transfer of the Collocation Space is in conjunction with Sprint's sale of all or suAT&Tantially all, of the in-place collocation equipment to the same CLEC.

1.4.2 The responsibilities of Sprint shall include: (1) submitting a letter of authorization to AT&T for the transfer; (2) entering into a transfer agreement with AT&T and the acquiring CLEC; and (3) returning all Security Access Devices to AT&T. The responsibilities of the acquiring CLEC shall include: (1) submitting an application to AT&T for the transfer of the Collocation Space; (2) satisfying all requirements of its interconnection agreement with AT&T; (3) submitting a letter to AT&T for the assumption of services; and (4) entering into a transfer agreement with AT&T and Sprint.

1.4.3 In conjunction with a transfer of Collocation Space, any services associated with the Collocation Space shall be transferred pursuant to separately negotiated rates, terms and conditions.

1.5 Space Reclamation

1.5.1 In the event of space exhaust within a AT&T Premises, AT&T may include in its documentation for the Petition for Waiver filed with the Commission, any unutilized space in the AT&T Premises. Sprint will be responsible for the justification of unutilized space within its Collocation Space, if the Commission requires such justification.

1.5.2 AT&T may reclaim unused Collocation Space when a AT&T Premises is at, or near, space exhaustion and Sprint cannot demonstrate that Sprint will utilize the Collocation Space in the time frames set forth below in Section 1.5.3. In the event of space exhaust or near exhaust within a AT&T Premises, AT&T will provide written notice to Sprint requesting that Sprint release non-utilized Collocation Space to AT&T, when one hundred percent (100%) of the Collocation Space in Sprint's collocation arrangement is not being utilized.

1.5.3 Within twenty (20) days of receipt of written notification from AT&T, Sprint shall either: (1) return the non-utilized Collocation Space to AT&T in which case Sprint shall be relieved of all obligations for charges associated with that portion of the Collocation Space applicable from the date the Collocation Space is returned to AT&T; or (2) for all states, with the exception of Florida, provide AT&T with information demonstrating that the Collocation Space will be utilized within twenty-four (24) months from the date Sprint accepted the Collocation Space (Acceptance Date) from AT&T. For Florida, Sprint shall provide information to AT&T demonstrating that the Collocation Space will be utilized within eighteen (18) months from the Acceptance Date.

1.5.4 Disputes concerning AT&T's claim of space exhaust, or near exhaust, or Sprint's refusal to return requested Collocation Space should be resolved by AT&T and Sprint pursuant to the dispute resolution language contained in the General Terms and Conditions.

1.6 Use of Space. Sprint shall use the Collocation Space for the purposes of installing and maintaining Sprint's equipment (to include testing and monitoring equipment) necessary, as that term is defined by the FCC, for interconnection with AT&T services and facilities or for accessing AT&T unbundled network elements for the provision of telecommunications services. The Collocation Space may be used by Sprint for any purposes consistent with effective FCC and Commission Orders or as authorized in writing by AT&T. The Collocation Space assigned to Sprint may not be used for any purposes other than as specifically described herein, including, but not limited to office space or a place of reporting for Sprint's employees or certified suppliers.

1.7 Rates and Charges. Sprint agrees to pay the rates and charges identified in Exhibit C.

1.8 Due Dates. If any due date contained in this Attachment falls on a weekend or a national holiday, then the due date will be the next business day thereafter. For intervals of ten (10) days or less, national holidays will be excluded. For purposes of this Attachment, national holidays include the following: New Year's Day,

Martin Luther King, Jr. Day, President's Day (Washington's Birthday), Memorial Day, Independence Day, Labor Day, Columbus Day, Veteran's Day, Thanksgiving Day and Christmas Day.

1.9 Compliance. Subject to Section 24 of the General Terms and Conditions of this Agreement, the Parties agree to comply with all applicable federal, state, county, local and administrative laws, rules, ordinances, regulations and codes in the performance of their obligations hereunder.

2 Optional Reports

2.1 Space Availability Report. Upon request from Sprint and at Sprint's expense, AT&T will provide a written report (Space Availability Report) describing in detail the space that is currently available for collocation at a particular AT&T Premises. This report will include the amount of Collocation Space available at the AT&T Premises requested, the number of collocators present at the AT&T Premises, any modifications in the use of the space since the last report on the AT&T Premises requested and the measures AT&T is taking to make additional space available for collocation arrangements. A Space Availability Report does not reserve space at the AT&T Premises for which the Space Availability Report was requested by Sprint.

2.1.1 The request from Sprint for a Space Availability Report must be in writing and include the AT&T Premises street address, as identified in the LERG, and the CLLI code for the AT&T Premises requested. CLLI code information is located in the NECA Tariff FCC No. 4.

2.1.2 AT&T will respond to a request for a Space Availability Report for a particular AT&T Premises within ten (10) days of the receipt of such request.

2.1.3 AT&T will use commercially reasonable efforts to respond in ten (10) days to a Space Availability Report request when the request includes from two (2) to five (5) AT&T Premises within the same state. The response time for Space Availability Report requests of more than five (5) AT&T Premises, whether the request is for the same state or for two (2) or more states within AT&T's Southeast Region, shall be negotiated between the Parties.

2.2 Remote Terminal Information. Upon request, AT&T will provide Sprint with the following information concerning AT&T's remote terminals: (i) the address of the remote terminal; (ii) the CLLI code of the remote terminal; (iii) the carrier serving area of the remote terminal; (iv) the designation of which remote terminals subtend a particular central office; and (v) the number and address of customers that are served by a particular remote terminal.

2.2.1 AT&T will provide this information within thirty (30) days of a Sprint request subject to the following conditions: (i) the information will only be provided on a CD in the same format in which it appears in AT&T's systems; and (ii) the information will only be provided for each serving wire center designated by Sprint, up to a maximum of thirty (30) wire centers per Sprint request per month per state. AT&T will bill the nonrecurring charge pursuant to the rates in Exhibit

C at the time AT&T sends the CD.

3 Collocation Options

3.1 Cageless Collocation. AT&T shall allow Sprint to collocate Sprint's equipment and facilities without requiring the construction of a cage or similar structure. AT&T shall allow Sprint to have direct access to Sprint's equipment and facilities in accordance with Section 5.1.2 below. AT&T shall make cageless collocation available in single bay increments. Except where Sprint's equipment requires special technical considerations (e.g., special cable racking or isolated ground plane), AT&T shall assign cageless Collocation Space in conventional equipment rack lineups where feasible. For equipment requiring special technical considerations, Sprint must provide the equipment layout, including spatial dimensions for such equipment pursuant to generic requirements contained in Telcordia GR-63-Core, and shall be responsible for compliance with all special technical requirements associated with such equipment.

3.2 Caged Collocation

3.2.1 AT&T will make caged Collocation Space in Central Offices available in fifty (50) square foot increments. At Sprint's option and expense, Sprint will arrange with a Supplier certified by AT&T (AT&T Certified Supplier) to construct a collocation arrangement enclosure in accordance with AT&T's specifications for a wire mesh enclosure prior to starting equipment installation. Where local building codes require enclosure specifications more stringent than AT&T's wire mesh enclosure specifications, Sprint and Sprint's AT&T Certified Supplier must comply with the more stringent local building code requirements. Sprint's AT&T Certified Supplier shall be responsible for filing and obtaining any and all necessary permits and/or licenses for such construction. AT&T or AT&T's designated agent or contractor shall provide, at Sprint's expense, documentation, which may include existing building architectural drawings, enclosure drawings, specifications, etc., necessary for Sprint's AT&T Certified Supplier to obtain all necessary permits and/or other licenses. Sprint's AT&T Certified Supplier shall bill Sprint directly for all work performed for Sprint. AT&T shall have no liability for, nor responsibility to pay, such charges imposed by Sprint's AT&T Certified Supplier. Sprint must provide the local AT&T Central Office Building Contact with two (2) Access Keys that will allow entry into the locked enclosure. Except in the case of an emergency, AT&T will not access Sprint's locked enclosure prior to notifying Sprint at least forty-eight (48) hours or two (2) business days, whichever is greater, before access to Sprint's Collocation Space is required. Upon request, AT&T shall construct the enclosure for Sprint.

3.2.2 In the event Sprint's AT&T Certified Supplier will construct the collocation arrangement enclosure, AT&T may elect to review Sprint's plans and specifications, prior to allowing the construction to start, to ensure compliance with AT&T's wire mesh enclosure specifications. AT&T will notify Sprint of its desire to conduct this review in AT&T's Application Response, as defined herein, to Sprint's Initial Application. If Sprint's Initial Application does not indicate its

desire to construct its own enclosure and Sprint subsequently decides to construct its own enclosure prior to AT&T's Application Response, then Sprint will resubmit its Initial Application, indicating its desire to construct its own enclosure. If Sprint subsequently decides construct its own enclosure after the bona fide firm order (hereinafter "BFFO") has been accepted by AT&T, Sprint will submit a Subsequent Application, as defined in Section 6.2 below. If AT&T elects to review Sprint's plans and specifications, then AT&T will provide notification to Sprint within ten (10) days after the Initial Application BFFO date or, if a Subsequent Application is submitted as set forth in the preceding sentence, then the Subsequent Application BFFO date. AT&T shall complete its review within fifteen (15) days after AT&T's receipt of Sprint's plans and specifications. Regardless of whether or not AT&T elects to review Sprint's plans and specifications, AT&T reserves the right to inspect the enclosure after construction has been completed to ensure that it is constructed according to Sprint's submitted plans and specifications and/or AT&T's wire mesh enclosure specifications, as applicable. If AT&T decides to inspect the constructed Collocation Space, AT&T will complete its inspection within fifteen (15) days after receipt of Sprint's written notification that the enclosure has been completed. Within seven (7) days after AT&T has completed its inspection of Sprint's caged Collocation Space, AT&T shall require Sprint, at Sprint's expense, to remove or correct any structure that does not meet Sprint's plans and specifications or AT&T's wire mesh enclosure specifications, as applicable.

3.3 <u>Shared Caged Collocation</u>

3.3.1 Sprint may allow other telecommunications carriers to share Sprint's caged Collocation Space, pursuant to the terms and conditions agreed to by Sprint (Host) and the other telecommunications carriers (Guests) contained in this Section, except where the AT&T Premises is located within a leased space and AT&T is prohibited by said lease from offering such an option to Sprint. AT&T shall be notified in writing by Sprint upon the execution of any agreement between the Host and its Guest(s) prior to the submission of an application. Further, such notification shall include the name of the Guest(s), the term of the agreement, and a certification by Sprint that said agreement imposes upon the Guest(s) the same terms and conditions for Collocation Space as set forth in this Attachment between AT&T and Sprint. The term of the agreement between the Host and its Guest(s) shall not exceed the term of this Agreement between AT&T and Sprint.

3.3.2 Sprint, as the Host, shall be the sole interface and responsible Party to AT&T for the assessment and billing of rates and charges contained within this Attachment and for the purposes of ensuring that the safety and security requirements of this Attachment are fully complied with by the Guest(s), its employees and agents. AT&T shall provide Sprint with a pro-ration of the costs of the Collocation Space based on the number of collocators and the space used by each. There will be a minimum charge of one (1) bay/rack per Host/Guest. In addition to the above, for all states other than Florida, Sprint shall be the responsible Party to AT&T for the

purpose of submitting applications for initial and additional equipment placement for the Guest(s). In Florida, the Guest(s) may submit its own Initial Application and Subsequent Applications for equipment placement using the Host's ACNA. A separate Guest application shall result in the assessment of an Initial Application Fee or a Subsequent Application Fee, as set forth in Exhibit C, which will be billed to the Host on the date that AT&T provides its written Application Response to the Guest(s) Bona Fide application.

3.3.3 Notwithstanding the foregoing, the Guest(s) may submit service orders directly to AT&T to request the provisioning of interconnecting facilities between AT&T and the Guest(s), the provisioning of services, and/or access to Network Elements. The bill for these interconnecting facilities, services and Network Elements will be charged to the Guest(s) pursuant to the applicable AT&T Tariff or the Guest's Interconnection Agreement with AT&T.

3.3.4 Sprint shall indemnify and hold harmless AT&T from any and all claims, actions, causes of action, of whatever kind or nature arising out of the presence of Sprint's Guest(s) in the Collocation Space. Nothing herein shall be construed to require indemnification by a Party for the willful misconduct or gross negligence of the other Party or, where prohibited by law, indemnification for a Party's own negligence or sole negligence and, to the extent such exclusion must be expressly stated the term indemnification as used in this section shall be construed to exclude specifically a Party's gross negligence or willful misconduct and a Party's own negligence or sole negligence. Where indemnification by a Party is permitted for claims arising out of the other Party's own negligence but such intention must be expressly stated, the term "indemnify" as used in this section, shall include the duty to indemnify for such other Party's negligence. Nothing herein shall be construed to require indemnification in excess of that permitted by law and, to the extent any part of this section is found to be invalid or unenforceable, the Parties agree that the obligation to indemnify under this Agreement shall be to the fullest extent permitted in the relevant jurisdictiono, excluding only such claims as are prohibited therein..

3.4 <u>Adjacent Collocation</u>

3.4.1 Subject to technical feasibility and space availability, AT&T will permit an adjacent collocation arrangement (Adjacent Arrangement) on AT&T Premises' property only when space within the requested AT&T Premises is legitimately exhausted and where the Adjacent Arrangement does not interfere with access to existing or planned structures or facilities on the AT&T Premises' property. An Adjacent Arrangement shall be constructed or procured by Sprint or Sprint's AT&T Certified Supplier and must be in conformance with the provisions of AT&T's design and construction specifications. Further, Sprint shall construct, procure, maintain and operate said Adjacent Arrangement pursuant to all of the applicable rates, terms and conditions set forth in this Attachment.

3.4.2 If Sprint requests Adjacent Collocation, pursuant to the conditions stated in Section 3.4 above, Sprint must arrange with a AT&T Certified Supplier to

construct or procure the Adjacent Arrangement structure in accordance with AT&T's specifications. AT&T will provide the appropriate specifications upon request. Where local building codes require specifications more stringent than AT&T's own specifications, Sprint and Sprint's AT&T Certified Supplier shall comply with the more stringent local building code requirements. Sprint's AT&T Certified Supplier shall be responsible for filing and obtaining any and all necessary zoning, permits and/or licenses for such construction. Sprint's AT&T Certified Supplier shall bill Sprint directly for all work performed for Sprint to comply with this Attachment. AT&T shall have no liability for, nor responsibility to pay such charges imposed by Sprint's AT&T Certified Supplier. Sprint must provide the local AT&T contact with two (2) cards, keys or other access devices used to gain entry into the locked enclosure. Except in the case of an emergency, AT&T will not access Sprint's locked enclosure prior to notifying Sprint at least forty-eight (48) hours or two (2) business days, whichever is greater, before access to the Collocation Space is required.

3.4.3 Sprint must submit its Adjacent Arrangement construction plans and specifications to AT&T when it places its Firm Order. AT&T shall review Sprint's plans and specifications prior to the construction of an Adjacent Arrangement to ensure Sprint's compliance with AT&T's specifications. AT&T shall complete its review within fifteen (15) days after receipt of the plans and specifications from Sprint for the Adjacent Arrangement. AT&T may inspect the Adjacent Arrangement during and after construction is completed to ensure that it is constructed according to Sprint's submitted plans and specifications. If AT&T decides to inspect the completed Adjacent Arrangement, AT&T will complete its inspection within fifteen (15) days after receipt of Sprint's written notification that the Adjacent Arrangement has been completed. Within seven (7) days after AT&T has completed its inspection of Sprint's Adjacent Arrangement, AT&T shall require Sprint, at Sprint's expense, to remove or correct any structure that does not meet its submitted plans and specifications or AT&T's specifications, as applicable.

3.4.4 Sprint shall provide a concrete pad, the structure housing the Adjacent Arrangement, HVAC, lighting and all of the facilities that are required to connect the structure (i.e., racking, conduits, etc.) to the AT&T point of demarcation. At Sprint's option and where the local authority having jurisdiction permits, AT&T shall provide an AC power source and access to physical Collocation services and facilities, subject to the same nondiscriminatory requirements as those applicable to any other physical Collocation arrangement. In Alabama and Louisiana, at Sprint's request and expense, AT&T will provide Direct Current (DC) power to an Adjacent Collocation site where technically feasible, as that term has been defined by the FCC, and in accordance with applicable law. AT&T will provide DC power in an Adjacent Arrangement provided that such provisioning can be done in compliance with the National Electric Code (NEC), all safety and building codes and any local codes, such as, but not limited to, local zoning codes, and upon completion of negotiations between the Parties on the applicable rates and provisioning intervals. Sprint will pay for any and all DC power construction

and provisioning costs to an Adjacent Arrangement through individual case basis (ICB) pricing that must be paid as follows: fifty percent (50%) before the DC installation work begins and fifty percent (50%) at completion of the DC installation work to the Adjacent Arrangement. Sprint's AT&T Certified Supplier shall be responsible, at Sprint's sole expense, for filing the required documentation to obtain any and all necessary permits and/or licenses for an Adjacent Arrangement. AT&T shall allow Shared Caged Collocation within an Adjacent Arrangement, pursuant to the terms and conditions set forth in Section 3.3 above.

3.5 Direct Connect

3.5.1 AT&T will permit Sprint to directly interconnect between its own physical/virtual Collocation Spaces within the same AT&T Premises (Direct Connect). Sprint shall contract with a AT&T Certified Supplier to place the Direct Connect, which shall be provisioned using facilities owned by Sprint. A Direct Connect shall utilize AT&T common cable support structure. There will be a recurring charge per linear foot, per cable, of the actual common cable support structure used by Sprint to provision the Direct Connect between its physical/virtual Collocation Spaces. In those instances where Sprint's physical/virtual Collocation Spaces are contiguous in the central office, Sprint will have the option of using Sprint's own technicians to deploy the Direct Connect using either electrical or optical facilities between its Collocation Spaces by constructing its own dedicated cable support structure. Sprint will deploy such electrical or optical connections directly between its own equipment without being routed through AT&T's equipment or common cable support structure. Sprint may not self-provision a Direct Connect on any AT&T distribution frame, Point of Termination (POT) Bay, Digital System Cross-Connect (DSX) panel or Light Guide Cross-Connect (LGX) panel. Sprint is solely responsible for ensuring the integrity of the signal.

3.5.2 To place an order for a Direct Connect, Sprint must submit an Initial Application or Subsequent Application to AT&T. If no modification to the Collocation Space is requested other than the placement of a Direct Connect, the Co-Carrier Cross Connect/Direct Connect Application Fee for Direct Connect, as defined in Exhibit C, will apply. If other modifications are requested, in addition to the placement of a Direct Connect, either an Initial Application Fee or a Subsequent Application Fee will apply, pursuant to Section 6.2 below. AT&T will bill this nonrecurring charge on the date that AT&T provides an Application Response to Sprint.

3.6 Co-Carrier Cross Connect (CCXC)

3.6.1 A CCXC is a cross connection between Sprint and another collocated telecommunications carrier, other than AT&T, in the same AT&T Premises. Where technically feasible, AT&T will permit Sprint to interconnect between its Collocation Space(s) and the physical/virtual collocation space(s) of another collocated telecommunications carrier(s) within the same AT&T Premises via a CCXC, pursuant to the FCC's Rules. The other collocated telecommunications carrier's agreement must also contain CCXC rates, terms and conditions before

AT&T will permit the provisioning of a CCXC between the two (2) collocated carriers. The applicable AT&T charges will be assessed to Sprint upon Sprint's request for the CCXC. Sprint is prohibited from using the Collocation Space for the sole or primary purpose of cross-connecting to other collocated telecommunications carriers.

3.6.2 Sprint must contract with a AT&T Certified Supplier to place the CCXC. The CCXC shall be provisioned using facilities owned by Sprint. Such cross-connections to other collocated telecommunications carriers may be made using either electrical or optical facilities. Sprint shall be responsible for providing a LOA, with the application, to AT&T from the other collocated telecommunications carrier to which it will be cross-connecting. The CCXC shall utilize AT&T common cable support structure. There will be a recurring charge per linear foot, per cable, of the common cable support structure used by Sprint to provision the CCXC to the other collocated telecommunications carrier. In those instances where Sprint's equipment and the equipment of the other collocated telecommunications carrier are located in contiguous caged Collocation Space, Sprint may use its own technicians to install the CCXC using either electrical or optical facilities between the equipment of both collocated telecommunications carriers by constructing a dedicated cable support structure between the two (2) contiguous cages. Sprint shall deploy such electrical or optical cross-connections directly between its own equipment and the equipment of the other collocated telecommunications carrier without being routed through AT&T's equipment or, in the case of a CCXC provisioned between contiguous collocation spaces, common cable support structure. Sprint shall not provision CCXC on any AT&T distribution frame, POT Bay, DSX panel or LGX panel. Sprint is solely responsible for ensuring the integrity of the signal.

3.6.3 To place an order for a CCXC, Sprint must submit an application to AT&T. If no modification to the Collocation Space is requested other than the placement of a CCXC, the Co-Carrier Cross Connect/Direct Connect Application Fee for a CCXC, as defined in Exhibit C, will apply. If other modifications are requested, in addition to the placement of a CCXC, either an Initial Application or a Subsequent Application Fee will apply, pursuant to Section 6.2 below. AT&T will bill this nonrecurring charge on the date that it provides an Application Response to Sprint.

4 Occupancy

4.1 Space Ready Notification. AT&T will notify Sprint in writing when the Collocation Space is ready for occupancy (Space Ready Date).

4.2 Acceptance Walkthrough. Sprint will schedule and complete an acceptance walkthrough of new or additional provisioned Collocation Space with AT&T within fifteen (15) days after the Space Ready Date. AT&T will correct any identified deviations from Sprint's original or jointly amended application within seven (7) days after the walkthrough, unless the Parties mutually agree upon a different time frame. AT&T will then establish a new Space Ready Date.

Another acceptance walkthrough will be scheduled and conducted within fifteen (15) days after the new Space Ready Date. This follow-up acceptance walkthrough will be limited to only those deviations identified in the initial walkthrough. If Sprint completes its acceptance walkthrough within the fifteen (15) day interval associated with the applicable Space Ready Date, billing will begin upon the date of Sprint's acceptance of the Collocation Space (Space Acceptance Date). In the event Sprint fails to complete an acceptance walkthrough within the fifteen (15) day interval associated with the applicable Space Ready Date, the Collocation Space shall be deemed accepted by Sprint on the Space Ready Date and billing will commence from that date.

4.3 Early Space Acceptance. If Sprint decides to occupy the Collocation Space prior to the Space Ready Date, the date Sprint executes the Agreement for Customer Access and Acceptance to Unfinished Collocation Space is the date that will be deemed the Space Acceptance Date and billing will begin from that date.

4.4 Equipment Installation. Sprint shall notify AT&T in writing that its collocation equipment installation is complete. Sprint's collocation equipment installation is complete when Sprint's equipment is connected to AT&T's network for the purpose of provisioning Telecommunication Services to Sprint's customers. AT&T may refuse to accept any orders for cross-connects until it has received such notice from Sprint.

4.5 Termination of Occupancy.

4.5.1 In addition to any other provisions addressing termination of occupancy in this Agreement, Sprint may terminate its occupancy of a particular Collocation Space by submitting a Subsequent Application requesting termination of occupancy for such Collocation Space. Such termination shall be effective upon AT&T's acceptance of the Space Relinquishment Form. Billing for monthly recurring charges will cease on the date that Sprint and AT&T conduct an inspection of the terminated space and jointly sign off on the Space Relinquishment Form or on the date that Sprint signs off on the Space Relinquishment Form and sends this form to AT&T, provided no discrepancies are found during AT&T's subsequent inspection of the terminated space. If the subsequent inspection by AT&T reveals any discrepancies, billing will cease on the date that AT&T and Sprint jointly conduct an inspection, confirming that Sprint has corrected all of the noted discrepancies identified by AT&T. A Subsequent Application Fee will not apply for the termination of occupancy; however, specific disconnect fees may apply to the services terminating to such Collocation Space. The particular disconnect fees that would apply in each state are contained in Exhibit C.

4.5.2 Upon termination of occupancy, Sprint, at its sole expense, shall remove its equipment and any other property owned, leased or controlled by Sprint from the Collocation Space. Sprint shall have thirty (30) days from the Bona Fide Firm Order (BFFO) date (Termination Date) to complete such removal, including the removal of all equipment and facilities of Sprint's Guest(s), unless Sprint's Guest(s) has assumed responsibility for the Collocation Space housing the

Guest(s)'s equipment and executed the appropriate documentation required by AT&T to transfer the Collocation Space to the Guest(s) prior to Sprint's Termination Date.

4.5.3 Sprint shall continue the payment of all monthly recurring charges to AT&T until the date Sprint, and if applicable Sprint's Guest(s), has fully vacated the Collocation Space and the Space Relinquishment Form has been accepted by AT&T. If Sprint or Sprint's Guest(s) fails to vacate the Collocation Space within thirty (30) days from the Termination Date, AT&T shall have the right to remove and dispose of the equipment and any other property of Sprint or Sprint's Guest(s), in any manner that AT&T deems fit, at Sprint's expense and with no liability whatsoever for Sprint's property or Sprint's Guest(s) property.

4.5.4 Upon termination of Sprint's right to occupy specific Collocation Space, the Collocation Space will revert back to AT&T's central office space inventory. Sprint shall surrender the Collocation Space to AT&T in the same condition as when it was first occupied by Sprint, with the exception of ordinary wear and tear, unless otherwise agreed to by the Parties. Sprint's AT&T Certified Supplier shall be responsible for updating and making any necessary changes to AT&T's records as required by AT&T specifications including, but not limited to, AT&T's Central Office Record Drawings and ERMA Records. Sprint shall be responsible for the cost of removing any Sprint constructed enclosure, as well as any supporting structures (e.g., racking, conduits, power cables, etc.), by the Termination Date and restoring the grounds to their original condition.

5 Use of Collocation Space

5.1 Equipment Type

5.1.1 AT&T shall permit the collocation and use of any equipment necessary for interconnection to AT&T's network and/or access to AT&T's unbundled network elements in the provision of Telecommunications Services, as the term "necessary" is defined by FCC 47 C.F.R. § 51.323 (b). The primary purpose and function of any equipment collocated in a AT&T Premises must be for interconnection to AT&T's network or access to AT&T's unbundled network elements in the provision of Telecommunications Services. Equipment is necessary for interconnection if an inability to deploy that equipment would, as a practical, economical, or operational matter, preclude the requesting carrier from obtaining interconnection with AT&T at a level equal in quality to that which AT&T obtains within its own network or what AT&T provides to any affiliate, subsidiary, or other party.

5.1.2 Examples of equipment that would not be considered necessary include, but are not limited to: traditional circuit switching equipment, equipment used exclusively for call-related databases, computer servers used exclusively for providing information services, OSS equipment used to support collocated telecommunications carrier network operations, equipment that generates customer orders, manages trouble tickets or inventory, or stores customer records in centralized databases, etc. AT&T will determine upon receipt of an application

if the requested equipment is necessary based on the criteria established by the FCC. Multifunctional equipment placed on a AT&T Premises must not place any greater relative burden on AT&T's property than comparable single-function equipment. AT&T reserves the right to allow the collocation of any equipment on a nondiscriminatory basis.

5.1.3 Such equipment must, at a minimum, meet the following Telcordia Network Equipment Building Systems (NEBS) General Equipment Requirements: for Central Offices Criteria Level 1 requirements as outlined in Telcordia Special Report SR-3580, Issue 1 and for Remote Sites Criteria Level 3 requirements as outlined in the Telcordia Special report SR-3580, Issue 1. Upon request by Sprint, AT&T, at its discretion, may consent to the collocation of any equipment not meeting these standards. Except where otherwise required by a Commission, AT&T shall comply with the applicable FCC rules relating to denial of collocation equipment based on Sprint's failure to comply with this Section.

5.1.4 At a Remote Site, all Sprint equipment installation shall comply with AT&T TR 73503-11h, "Grounding - Engineering Procedures". Metallic cable sheaths and metallic strength members of optical fiber cables as well as the metallic cable sheaths of all copper conductor cables shall be bonded to the designated grounding bus for the Remote Site Location. All copper conductor pairs, working and non-working, shall be equipped with a solid-state protector unit (over-voltage protection only), which has been listed by a nationally recognized testing laboratory.

5.2 Terminations. Sprint shall not request more DS0, DS1, DS3 and/or optical terminations for a collocation arrangement than the total port or termination capacity of the equipment physically installed in the Collocation Space. The total capacity of the equipment collocated in the Collocation Space will include equipment contained in an application, as well as any equipment already placed in the Collocation Space. If full network termination capacity of the equipment being installed is not requested in the application submitted by Sprint, additional network terminations for the installed equipment will require the submission of a Subsequent Application. In the event Sprint submits an application for terminations that will exceed the total capacity of the collocated equipment, Sprint will be informed of the discrepancy by AT&T and required to submit a revision to the application.

5.3 Security Interest in Equipment. Commencing with the most current calendar quarter after the Effective Date of this Agreement, and thereafter with respect to each subsequent calendar quarter during the term of this Agreement, Sprint will, no later than thirty (30) days after the close of such calendar quarter, provide a report to ICS Collocation Product Management, Room 34th Floor, 675 W. Peachtree Street, Atlanta, Georgia 30375, listing any equipment in the Collocation Space (i) that was added during the calendar quarter to which such report pertains, and (ii) for which there is a UCC-1 lien holder or to another entity that has a secured financial interest in such equipment (Secured Equipment). If no Secured Equipment has been installed within a given calendar quarter, no report shall be

due hereunder in connection with such calendar quarter.

5.4 No Marketing. Sprint shall not use the Collocation Space for marketing purposes, nor shall it place any identifying signs or markings outside the Collocation Space or on the grounds of the AT&T Premises.

5.5 Equipment Identification. Sprint shall place a plaque or affix other identification (e.g., stenciling or labeling) to each piece of Sprint's equipment, including the appropriate emergency contacts with their corresponding telephone numbers, in order for AT&T to properly identify Sprint's equipment in the case of an emergency. For caged Collocation Space, such identification must be placed on a plaque affixed to the outside of the caged enclosure.

5.6 Entrance Facilities.

5.6.1 Sprint may elect to place Sprint-owned or Sprint leased fiber entrance facilities into its Collocation Space. AT&T will designate the point of interconnection in close proximity to the AT&T Premises housing the Collocation Space, such as at an entrance manhole or a cable vault for Central Offices, which is physically accessible by both Parties. For Central Offices, Sprint will provide and place fiber cable in the entrance manhole of sufficient length to be pulled through conduit and into the splice location. Sprint will provide and install a sufficient length of fire retardant riser cable, to which AT&T will splice the entrance cable. The fire retardant riser cable will extend from the splice location to Sprint's equipment in Sprint's Collocation Space. In the event Sprint utilizes a non-metallic, riser-type entrance facility, a splice will not be required. For Remote Terminals Sprint will provide and place copper cable through conduit from the Remote Site Collocation Space to the feeder distribution interface. Such copper cable must be of sufficient length to reach the splice location for splicing by AT&T. Sprint must contact AT&T for authorization and instruction prior to placing any entrance facility cable in an entrance manhole or cable vault. Sprint is responsible for the maintenance of the entrance facilities. Nonrecurring charges for cable installation will be assessed on a per cable basis as set forth in Exhibit C upon receipt of Sprint's BFFO. Recurring charges for the cable support structure will be billed at the rates set forth in Exhibit C.

5.6.2 Central Office Microwave Transmission Facilities. At Sprint's request, AT&T will accommodate, where technically feasible and space is available, a microwave entrance facility, pursuant to separately negotiated rates, terms and conditions.

5.6.3 Central Office Copper and Coaxial Cable Entrance Facilities. In Florida and Georgia, AT&T shall permit Sprint to use copper or coaxial cable entrance facilities, if approved by the Commission, but only in those rare instances where Sprint demonstrates a necessity and entrance capacity is not at or near exhaust in a particular AT&T Premises in which Sprint's Collocation Space is located. In Florida, Sprint must have approval by the Commission before it submits a request for copper entrance facilities. Notwithstanding the foregoing, in the case of adjacent collocation, copper facilities may be used between the adjacent collocation arrangement and the central office demarcation point, unless AT&T

determines that limited space is available for the placement of these entrance facilities.

5.7 Dual Entrance Facilities at a Central Office. AT&T will provide at least two (2) interconnection points at each Central Office where at least two (2) such interconnection points are available and capacity exists. Upon receipt of a request by Sprint for dual entrance facilities to its physical Collocation Space, AT&T shall provide Sprint with information regarding AT&T's capacity to accommodate the requested dual entrance facilities. If conduit in the serving manhole(s) is available and is not reserved for another purpose or for utilization within twelve (12) months of the receipt of an application for collocation, AT&T will make the requested conduit space available for the installation of a second entrance facility to Sprint's Collocation Space. The location of the serving manhole(s) will be determined at the sole discretion of AT&T. Where dual entrance facilities are not available due to a lack of capacity, AT&T will provide this information to Sprint in the Application Response.

5.8 Shared Use

5.8.1 Sprint may utilize spare capacity on an existing telecommunications carrier's entrance facility for the purpose of obtaining an entrance facility to Sprint's Collocation Space within the same AT&T Premises.

5.8.2 AT&T shall allow the splice, as long as the fiber is non-working dark fiber. Sprint must arrange with AT&T in accordance with AT&T's Special Construction Procedures, RL93-11-030BT, and provide a LOA from the other telecommunications carrier authorizing AT&T to perform the splice of the Sprint-provided riser cable to the spare capacity on the other telecommunications carrier's entrance facility. If Sprint desires to allow another telecommunications carrier to use its entrance facilities, the telecommunications carrier must arrange with AT&T in accordance with AT&T's Special Construction Procedures, RL93-11-030BT, and provide a LOA from Sprint authorizing AT&T to perform the splice of the telecommunications carrier's provided riser cable to the spare capacity on Sprint's entrance facility.

5.9 Demarcation Point

5.9.1 In Tennessee, if Sprint elects the Tennessee Regulatory Authority (TRA) rates as set forth in Exhibit C, the additional language also set forth in Exhibit C for Demarcation Point, will be effective in conjunction with the remaining terms and conditions of this Attachment.

5.9.2 AT&T will designate the point(s) of demarcation between Sprint's equipment and/or network facilities and AT&T's network facilities. Each Party will be responsible for the maintenance and operation of all equipment/facilities on its side of the demarcation point. Sprint shall be responsible for providing the common block and cabling and Sprint's AT&T Certified Supplier shall be responsible for installing and properly labeling/stenciling the common block and any necessary cabling identified in Section 7 below. Sprint or its agent must perform all required maintenance to the equipment/facilities on its side of the

demarcation point, pursuant to Section 5.10 below and may self-provision cross-connects that may be required within its own Collocation Space to activate service requests.

5.10 Equipment and Facilities. Sprint, or if required by this Attachment, Sprint's AT&T Certified Supplier, is solely responsible for the design, engineering, installation, testing, provisioning, performance, monitoring and maintenance/repair of the equipment and network facilities used by Sprint, which must be performed in compliance with all applicable AT&T specifications. Such equipment and network facilities may include, but are not limited to, cable(s), equipment, and POT connections. Sprint and its designated AT&T Certified Supplier must follow and comply with all AT&T specifications outlined in the following AT&T Technical Requirements: TR 73503, TR 73519, TR 73572 and TR 73564.

5.11 AT&T's Access to Collocation Space

5.11.1 From time to time, AT&T may require access to Sprint's Collocation Space. AT&T retains the right to access Sprint's Collocation Space for the purpose of making AT&T equipment and building modifications (e.g., installing, altering or removing racking, ducts, electrical wiring, HVAC, and cabling). In such cases, AT&T will give notice to Sprint at least forty-eight (48) hours before access to Sprint's Collocation Space is required. Sprint may elect to be present whenever AT&T performs work in the Sprint's Collocation Space. The Parties agree that Sprint will not bear any of the expense associated with this type of work.

5.11.2 In the case of an emergency, AT&T will provide oral notice of entry as soon as reasonably practicable after such entry.

5.11.3 The Parties agree that AT&T is entitled to have two (2) Access Devices that will allow AT&T entry into any enclosed and locked Collocation Space including, but not limited to, an Adjacent Arrangement, pursuant to the requirements contained in this Section. Therefore, to the extent that AT&T does not have Access Devices to a Sprint Collocation Space, Sprint will work cooperatively to provide the needed Access Devices to the local AT&T Central Office Building Contact.

5.12 Sprint's Access

5.12.1 Pursuant to Section 12 below, Sprint shall have access to its Collocation Space twenty-four (24) hours a day, seven (7) days a week. Sprint agrees to provide the name, date of birth and either the social security number or driver's license number of each employee, supplier or agent of Sprint or Sprint's Guest(s) with Sprint's written request for access keys or cards (Access Devices) for specific AT&T Premises, prior to the issuance of said Access Devices, using Form RF-2906-C, the "CLEC and CLEC Certified Supplier Access Request and Acknowledgement" form. The appropriate key acknowledgement forms (the "Collocation Acknowledgement Sheet" for access cards and the "Key Acknowledgement Form" for keys) must be signed by Sprint and returned to AT&T Access Management within fifteen (15) days of Sprint's receipt of these forms. Failure to return these properly acknowledged forms will result in the

subsequent access key or card requests being held by AT&T until the proper acknowledgement documents have been received by AT&T and reflect current information. Charges for Security Access System and for Security Access Devices will be billed at the rates set forth in Exhibit C. Access Devices may not be duplicated under any circumstances. Sprint agrees to be responsible for all Access Devices and for the return of all Access Devices in the possession of Sprint's employees, suppliers, agents or Guests after termination of the employment relationship, the contractual obligation with Sprint ends, upon the termination of this Agreement, or upon the termination of occupancy of Collocation Space in a specific AT&T Premises. Sprint shall pay all applicable charges associated with lost or stolen Access Devices.

5.12.2 Sprint must submit to AT&T the completed Access Control Request Form for all employees, suppliers, agents or Guests requiring access to a AT&T Premises at least thirty (30) days prior to the date Sprint desires to gain access to the Collocation Space. In order to permit reasonable access during construction of the Collocation Space, Sprint may submit a request for its one (1) free accompanied site visit to its designated Collocation Space at any time subsequent to AT&T's receipt of the BFFO. In the event Sprint desires access to its designated Collocation Space after the first accompanied free visit and Sprint's access request form(s) has not been approved by AT&T or Sprint has not yet submitted an access request form to AT&T, Sprint shall be permitted to access the Collocation Space accompanied by a AT&T security escort, at Sprint's expense, which will be assessed pursuant to the Security Escort fees contained in Exhibit C. Sprint must request that escorted access be provided by AT&T to Sprint's designated Collocation Space at least three (3) business days prior to the date such access is desired. A AT&T security escort will be required whenever Sprint or its approved agent or supplier requires access to the entrance manhole.

5.13 Lost or Stolen Access Devices. Sprint shall immediately notify AT&T in writing when any of its Access Devices have been lost or stolen. If it becomes necessary for AT&T to re-key buildings or deactivate an Access Device as a result of a lost or stolen Access Device(s) or for failure of Sprint's employees, suppliers, agents or Guest(s) to return an Access Device(s), Sprint shall pay for the costs of re-keying the building or deactivating the Access Device(s).

5.14 Interference or Impairment

5.14.1 Notwithstanding any other provisions of this Attachment, Sprint shall not use any product or service provided under this Agreement, any other service related thereto or used in combination therewith, or place or use any equipment or facilities in any manner that (1) significantly degrades, interferes with or impairs service provided by AT&T or any other entity or any person's use of its telecommunications services; (2) endangers or damages the equipment, facilities or any other property of AT&T or any other entity or person; (3) compromises the privacy of any communications routed through the AT&T Premises; or (4) creates an unreasonable risk of injury or death to any individual or to the public. If AT&T reasonably determines that any equipment or facilities of Sprint violates

the provisions of this paragraph, AT&T shall provide written notice to Sprint, which shall direct Sprint to cure the violation within forty-eight (48) hours of Sprint's receipt of written notice or, if such cure is not feasible, at a minimum, to commence curative measures within twenty-four (24) hours and exercise reasonable diligence to complete such measures as soon as possible thereafter. After receipt of the notice, the Parties agree to consult immediately and, if necessary, to conduct an inspection of the Collocation Space.

5.14.2 Except in the case of the deployment of an advanced service which significantly degrades the performance of other advanced services or traditional voice band services, if Sprint fails to cure the violation within forty-eight (48) hours or, if such cure is not possible, to commence curative action within twenty-four (24) hours and exercise reasonable diligence to complete such action as soon as possible, or if the violation is of a character that poses an immediate and suAT&Tantial threat of damage to property or injury or death to any person, or any other significant degradation, interference or impairment of AT&T's or another entity's service, then and only in that event, AT&T may take such action as it deems necessary to eliminate such threat including, without limitation, the interruption of electrical power to Sprint's equipment and/or facilities. AT&T will endeavor, but is not required, to provide notice to Sprint prior to the taking of such action and AT&T shall have no liability to Sprint for any damages arising from such action, except to the extent that such action by AT&T constitutes willful misconduct.

5.14.3 For purposes of this Section, the term "significantly degrades" shall be defined as an action that noticeably impairs a service from a user's perspective. In the case of the deployment of an advanced service which significantly degrades the performance of other advanced services or traditional voice band services and Sprint fails to cure the violation within forty-eight (48) hours, or if such cure is not possible, to commence curative action within twenty-four (24) hours and exercise reasonable diligence to complete such action as soon as possible, AT&T will establish before the appropriate Commission that the technology deployed is causing the significant degradation. Any claims of network harm presented to Sprint or, if subsequently necessary, the Commission must be provided by AT&T with specific and verifiable information. When AT&T demonstrates that a certain technology deployed by Sprint is significantly degrading the performance of other advanced services or traditional voice band services, Sprint shall discontinue deployment of that technology and migrate its customers to other technologies that will not significantly degrade the performance of such services. Where the only degraded service itself is a known disturber, and the newly deployed technology satisfies at least one of the criteria for a presumption that it is acceptable for deployment, pursuant to 47 C.F.R. § 51.230, the degraded service shall not prevail against the newly-deployed technology.

5.15 Personalty and Its Removal. Facilities and equipment placed by Sprint in the Collocation Space shall not become a part of the Collocation Space, even if nailed, screwed or otherwise fastened to the Collocation Space, but shall retain

their status as personal property and may be removed by Sprint at any time. Any damage caused to the Collocation Space by Sprint's employees, suppliers, agents or Guests during the installation or removal of such property shall be promptly repaired by Sprint at its sole expense. If Sprint decides to remove equipment and/or facilities from its Collocation Space and the removal requires no physical work be performed by AT&T and Sprint's physical work includes, but is not limited to, power reduction, cross-connects, or tie pairs, AT&T will bill Sprint the Administrative Only Application Fee associated with the type of removal activity performed by Sprint, as set forth in Exhibit C. This nonrecurring fee will be billed on the date that AT&T provides an Application Response to Sprint.

5.16 Alterations. Under no condition shall Sprint or any person acting on behalf of Sprint make any rearrangement, modification, augment, improvement, addition, and/or other alteration which could affect in any way space, power, HVAC, and/or safety considerations to the Collocation Space or the AT&T Premises, hereinafter referred to individually or collectively as "Alterations", without the express written consent of AT&T, which shall not be unreasonably withheld. The cost of any such Alteration shall be paid by Sprint. An Alteration shall require the submission of a Subsequent Application and will result in the assessment of the applicable application fee associated with the type of alteration requested, as set forth in Sections 6.2.1 and 7.1.4 below, which will be billed by AT&T on the date that AT&T provides Sprint with an Application Response.

5.17 Central Office Janitorial Service. Sprint shall be responsible for the general upkeep of its Collocation Space. Sprint shall arrange directly with a AT&T Certified Supplier for janitorial services applicable to caged Collocation Space. Upon request, AT&T shall provide a list of such suppliers on a AT&T Premises-specific basis.

5.18 Upkeep of Remote Collocation Space. Sprint shall be responsible for the general upkeep and cleaning of the Remote Collocation Space. Sprint shall be responsible for removing any of Sprint's debris from the Remote Collocation Space and from in and around the Remote Site Location on each visit.

6 Ordering and Preparation of Collocation Space

6.1 Initial Application. For Sprint's or Sprint's Guest's(s') initial equipment placement, Sprint shall input a physical Expanded Interconnection Application Document (Initial Application) for physical Collocation Space directly into AT&T's electronic application (e.App) system for processing. The Initial Application is considered Bona Fide when it is complete and accurate, meaning that all of the required fields on the Initial Application are completed with the appropriate type of information. An Initial Application Fee, as set forth in Exhibit C, will apply to each Initial Application submitted by Sprint for Central Office or Remote Site Collocation, as applicable, and will be billed by AT&T on the date AT&T provides Sprint with an Application Response.

6.1.1 For Remote Site Collocation, a request for additional space at a later date will

require the submission of an Initial Application. The installation of additional shelves/equipment within an existing bay does not require an Initial Application.

6.2 Subsequent Application. In the event Sprint or Sprint's Guest(s) desires to modify its use of the Collocation Space in a Central Office after a BFFO, Sprint shall complete an application that contains all of the detailed information associated with a requested Alteration of the Collocation Space, as defined in Section 5.15 above (Subsequent Application). The Subsequent Application will be considered Bona Fide when it is complete and accurate, meaning that all of the required fields on the Subsequent Application have been completed with the appropriate type of information associated with the requested Alteration. AT&T shall determine what modifications, if any, to the AT&T Premises are required to accommodate the change(s) requested by Sprint in the Subsequent Application. Such modifications to the AT&T Premises may include, but are not limited to, floor loading changes, changes necessary to meet HVAC requirements, changes to power plant requirements, equipment additions, etc.

6.2.1 Subsequent Application Fees. The application fee paid by Sprint for an Alteration in a Central Office shall be dependent upon the level of assessment needed to provide a complete Application Response for the Alteration requested. Where the Subsequent Application does not require provisioning or construction work, but requires AT&T to perform an administrative activity, an Administrative Only Application Fee shall apply as set forth in Exhibit C. The Administrative Only Application Fee will apply to Subsequent Applications associated with a transfer of ownership of the Collocation Space, removal of equipment from the Collocation Space (where the removal requires no physical work to be performed by AT&T), and a virtual-to-physical conversion (in place). The Co-Carrier Cross Connect/Direct Connect Application Fee will apply when Sprint submits a Subsequent Application for a direct connection between its own physical and virtual Collocation Space(s) in the same AT&T Central Office or between its physical or virtual Collocation Space and that of another collocated telecommunications carrier within the same AT&T Central Office. In Florida and Tennessee, the Power Reconfiguration Only Application Fee will apply when Sprint submits a Subsequent Application that reflects only an upgrade or reduction in the amount of power that AT&T is currently providing to Sprint's physical Collocation Space in a Central Office. The fee for a Subsequent Application, for which the Alteration requested has limited effect (e.g., requires limited assessment and sufficient cable support structure, HVAC, power and terminations are available), shall be the Subsequent Application Fee, as set forth in Exhibit C. The appropriate nonrecurring application fee will be billed on the date that AT&T provides Sprint with an Application Response.

6.3 Space Preferences. If Sprint has previously requested and received a Space Availability Report for the AT&T Premises, Sprint may submit up to three (3) space preferences on its application by identifying the specific space identification numbers referenced on the Space Availability Report for the space it is requesting. In the event AT&T cannot accommodate Sprint's space preference(s),

Sprint may accept the space allocated by AT&T or cancel its application and submit another application requesting additional space preferences for the same AT&T Premises. This application will be treated as a new application and the appropriate application fee will apply. The application fee will be billed by AT&T on the date that AT&T provides Sprint with an Application Response.

6.4 Space Availability Notification

6.4.1 For all states except Florida and Tennessee, AT&T will respond to an application within ten (10) days as to whether space is available or not available within the requested AT&T Premises. In Florida and Tennessee, AT&T will respond to an application within fifteen (15) days as to whether space is available or not available within a AT&T Premises. AT&T's e.App system will reflect when Sprint's application is Bona Fide. If the application cannot be Bona Fide, AT&T will identify what revisions are necessary for the application to become Bona Fide.

6.4.2 If the amount of space requested is not available, AT&T will notify Sprint of the amount of space that is available and no application fee will apply. When AT&T's response includes an amount of space less than that requested by Sprint or space that is configured differently, no application fee will apply. If Sprint decides to accept the available space, Sprint must resubmit its application to reflect the actual space available, including the configuration of the space, prior to submitting a BFFO. When Sprint resubmits its application to accept the available space, AT&T will bill Sprint the appropriate application fee.

6.5 Denial of Application. If AT&T notifies Sprint that no space is available (Denial of Application), AT&T will not assess an application fee to Sprint. After notifying Sprint that AT&T has no available space in the requested AT&T Premises, AT&T will allow Sprint, upon request, to tour the entire AT&T Premises within ten (10) days of such Denial of Application. In order to schedule this tour, AT&T must receive the request for the tour of the AT&T Premises within five (5) days of the Denial of Application.

6.6 Petition for Waiver. Upon Denial of Application, AT&T will timely file a petition with the appropriate Commission pursuant to 47 U.S.C. § 251(c)(6). AT&T shall provide to the Commission any information requested by that Commission. Such information shall include which space, if any, AT&T or any of AT&T's affiliates have reserved for future use and a detailed description of the specific future uses for which the space has been reserved. Subject to an appropriate nondisclosure agreement or provision, AT&T shall permit Sprint to inspect any floor plans or diagrams that AT&T provides to the Commission.

6.7 Waiting List

6.7.1 On a first-come, first-serve basis, which is governed by the date of receipt of an application or Letter of Intent, AT&T will maintain a waiting list of requesting telecommunications carriers that have either received a Denial of Application or, where it is publicly known that a AT&T Premises is out of space, have submitted a Letter of Intent to collocate in that AT&T Premises. AT&T will notify each

telecommunications carrier on the waiting list that can be accommodated by the amount of space that becomes available, according to the position of the telecommunications carrier on said waiting list.

6.7.2 In Florida, on a first-come, first-serve basis, which is governed by the date of receipt of an application or Letter of Intent, AT&T will maintain a waiting list of requesting telecommunications carriers that have either received a Denial of Application or, where it is publicly known that a AT&T Premises is out of space, have submitted a Letter of Intent to collocate in that AT&T Premises. Sixty (60) days prior to space becoming available, if known, AT&T will notify the Commission and the telecommunications carriers on the waiting list by mail when space will become available. If AT&T does not know sixty (60) days in advance of when space will become available, AT&T will notify the Commission and the telecommunications carriers on the waiting list within two (2) business days of the determination that space will become available. A telecommunications carrier that, upon denial of physical Collocation Space, requests virtual Collocation Space shall automatically be placed on the waiting list for physical Collocation Space that may become available in the future.

6.7.3 When physical Collocation Space becomes available, Sprint must submit an updated, complete and accurate application to AT&T within thirty (30) days of notification by AT&T that physical Collocation Space will be available in the requested AT&T Premises previously out of space. If Sprint has originally requested caged Collocation Space and cageless Collocation Space becomes available, Sprint may refuse such space and notify AT&T in writing, within the thirty (30) day timeframe referenced above, that Sprint wishes to maintain its place on the waiting list for caged physical Collocation Space, without accepting the available cageless Collocation Space.

6.7.4 Sprint may accept an amount of space less than what it originally requested by submitting an application as set forth above, and upon request, may maintain its position on the waiting list for the remaining space that was initially requested. If Sprint does not submit an application or notify AT&T in writing within the thirty (30) day timeframe as described in Section 6.7.2 above, AT&T will offer the available space to the next telecommunications carrier on the waiting list and remove Sprint from the waiting list. Upon request, AT&T will advise Sprint as to its position on the waiting list for a particular AT&T Premises.

6.8 Public Notification. AT&T will maintain on its Interconnection Web site, a notification document that will indicate all AT&T Premises that are without available space. AT&T shall update such document within ten (10) days of the date that AT&T becomes aware that insufficient space is available to accommodate physical Collocation. AT&T will also post a document on its Interconnection Web site that contains a general notice when space becomes available in a AT&T Premises previously on the space exhaust list.

6.9 Application Response

6.9.1 In Alabama, Georgia, Kentucky, Louisiana, Mississippi, North Carolina and

South Carolina, when space has been determined to be available for physical (caged or cageless) Collocation arrangements, AT&T will provide an Application Response within twenty (20) days of receipt of a Bona Fide application. The Application Response will be a written response that includes sufficient information to enable Sprint to place a Firm Order, which, at a minimum, will include the configuration of the space, the Cable Installation Fee, the Cable Records Fee, and any other applicable space preparation fees, as described in Section 8 below.

6.9.2 In Florida and Tennessee, within fifteen (15) days of receipt of a Bona Fide application, when space has been determined to be available or when a lesser amount of space than that requested is available, then with respect to the space available, AT&T will provide an Application Response including sufficient information to enable Sprint to place a Firm Order. The Application Response will include, at a minimum, the configuration of the space, the Cable Installation Fee, the Cable Records Fee and any other applicable space preparation fees, as described in Section 8 below. When Sprint submits ten (10) or more applications within ten (10) days, the initial fifteen (15) day response interval will increase by ten (10) days for every additional ten (10) applications or fraction thereof.

6.10 Application Modifications. If a modification or revision is made to any information in the Bona Fide application after AT&T has provided the Application Response and prior to a BFFO, with the exception of modifications to (1) Customer Information, (2) Contact Information or (3) Billing Contact Information, whether at the request of Sprint or as necessitated by technical considerations, the application shall be considered a new application and handled as a new application with respect to the response and provisioning intervals. AT&T will charge Sprint the appropriate application fee associated with the level of assessment performed by AT&T, pursuant to Sections 6.1 and 6.2 above.

6.11 Bona Fide Firm Order

6.11.1 Sprint shall indicate its intent to proceed with a Collocation Space request in a AT&T Premises by submitting a BFFO to AT&T. The BFFO must be received by AT&T no later than thirty (30) days after AT&T's Application Response to Sprint's Bona Fide application or Sprint's application will expire.

6.11.2 AT&T will establish a Firm Order date based upon the date AT&T is in receipt of Sprint's BFFO. AT&T will acknowledge the receipt of Sprint's BFFO within seven (7) days of receipt, so that Sprint will have positive confirmation that its BFFO has been received. AT&T's response to a BFFO will include a Firm Order Confirmation, which contains the firm order date. No revisions may be made to a BFFO.

7 Construction and Provisioning

7.1 Construction and Provisioning Intervals

7.1.1 In Florida and Tennessee, AT&T will complete construction of physical Collocation Space as soon as possible within a maximum of ninety (90) days from

receipt of a BFFO or as agreed to by the Parties. For virtual Collocation Space, AT&T will complete construction as soon as possible within a maximum of sixty (60) days from receipt of a BFFO or as agreed to by the Parties. For Alterations requested to Collocation Space after the initial space has been completed, AT&T will complete construction for Collocation Space as soon as possible within a maximum of forty-five (45) days from receipt of a BFFO or as agreed to by the Parties, as long as no additional space has been requested by Sprint. If additional space has been requested by Sprint, AT&T will complete construction for the requested Collocation Space as soon as possible within a maximum of ninety (90) days from receipt of a BFFO for physical Collocation Space and forty five (45) days from receipt of a BFFO for virtual Collocation Space. If AT&T does not believe that construction will be completed within the relevant provisioning interval and AT&T and Sprint cannot agree upon a completion date, within forty-five (45) days of receipt of the BFFO for an initial request, or within thirty (30) days of receipt of the BFFO for an Alteration, AT&T may seek an extension from the Commission.

7.1.2 In Alabama, Georgia, Kentucky, Louisiana, Mississippi, North Carolina and South Carolina, AT&T will complete construction for caged physical Collocation Space under ordinary conditions as soon as possible within a maximum of ninety (90) days from receipt of a BFFO or as agreed to by the Parties. AT&T will complete construction for cageless physical Collocation Space under ordinary conditions as soon as possible within a maximum of sixty (60) days from receipt of a BFFO and ninety (90) days from receipt of a BFFO for extraordinary conditions, or as agreed to by the Parties. Ordinary conditions are defined as space available with only minor changes required to AT&T's support systems. (Examples include, but are not limited to: minor modifications to HVAC, cabling and AT&T's power plant.) Extraordinary conditions include, but may not be limited to: major AT&T equipment rearrangements or additions; power plant additions or upgrades; major mechanical additions or upgrades; major upgrades for ADA compliance; environmental hazards or hazardous materials abatement; and arrangements for which equipment shipping intervals are extraordinary in length. The Parties may mutually agree to renegotiate an alternative provisioning interval for the Collocation Space requested or AT&T may seek a waiver from the ordered interval, as set forth above, from the appropriate Commission, if AT&T does not believe that construction will be completed within the relevant provisioning interval.

7.1.3 Records Only Change. When Sprint adds equipment that was originally included on Sprint's Initial Application or a Subsequent Application, and the installation of this equipment requires no additional space preparation work or cable terminations on the part of AT&T, then AT&T will impose no additional charges or intervals.

7.1.4 For Central Offices in the states of Alabama, Georgia, Kentucky, Louisiana, Mississippi, North Carolina, and South Carolina, AT&T will provide the reduced

intervals outlined below to Sprint, when Sprint requests an Alteration specifically identified in Sections 7.1.4.1 through 7.1.4.9 below as an "Augment". Except as otherwise set forth in Section 7.1.4.10 below, such Augment will require a Subsequent Application and will result in the assessment of the appropriate application fee associated with the type of Augment requested by Sprint. AT&T will assess the appropriate nonrecurring application fee set forth in Exhibit C on the date that it provides an Application Response to Sprint.

7.1.4.1 Simple Augments will be completed within twenty (20) days after receipt of the BFFO for an:

- Extension of Existing AC Circuit Capacity within Arrangement where Sufficient Circuit Capacity is Available
- Fuse Change and/or Increase or Decrease -48 Volt (-48V) DC Power

7.1.4.2 Minor Augments will be completed within forty-five (45) days after receipt of the BFFO for:

- 168 DS1 Terminations at the AT&T Demarcation Frame (Databasing Only; Panels, Relay Racks and Overhead Racking Exist)
- 96 DS3 Terminations at the AT&T Demarcation Frame (Databasing Only; Panels, Relay Racks and Overhead Racking Exist)
- 99 Fiber terminations at the AT&T Demarcation Frame (Databasing Only; Panels, Relay Racks and Overhead Racking Exist)
- Maximum of 2000 Service Ready DS0 Terminations at the AT&T Demarcation Frame (Databasing Only; Panels, Relay Racks and Overhead Racking Exist)

7.1.4.3 Intermediate Augments will be completed within sixty (60) days after receipt of the BFFO for:

- 168 DS1s (Databasing and Installation of Termination Panels, Relay Racks or Additional Structure, as Required)
- 96 DS3s (Databasing and Installation of Termination Panels, Relay Racks or Additional Structure, as Required)
- 99 Fiber Terminations (Databasing and Installation of Termination Panels, Relay Racks or Additional Structure, as Required)
- 2000 DS0s (Databasing and Installation of Termination Panels, Relay Racks or Additional Structure, as Required)
- Installation of Cable Racking or Other Support Structure, as Required, to Support CCXCs (Adequate Floor or Ceiling Structural Capacity Exists and Support/Protection structure for Fiber Patch Cord is Excluded)

7.1.4.4 Major Augments of physical Collocation Space will be completed within ninety (90) days after BFFO. All requests for additional Physical Collocation Space (caged or cageless) are included in this category.

7.1.4.5 Major Augments of virtual Collocation Space will be completed within

seventy-five (75) days after BFFO. This category includes all requests for additional virtual Collocation Space.

7.1.4.6 If Sprint submits an Augment that includes two (2) Augment items from the same category in either Sections 7.1.4.1, 7.1.4.2 or 7.1.4.3 above, the provisioning interval associated with the next highest Augment category will apply (e.g., if two (2) items from the Minor Augment category are requested on the same request, then an interval of sixty (60) days from the receipt of the BFFO would apply, which is the interval associated with the Intermediate Augment category).

7.1.4.7 If Sprint submits an Augment that includes three (3) Augment items from the same category in either Sections 7.1.4.1, 7.1.4.2, or 7.1.4.3 above, the Major Augment interval of ninety (90) days from the receipt of the BFFO would apply (e.g., if three (3) items from the Simple Augment category are requested on the same request for a physical Collocation arrangement, then an interval of ninety (90) days from the receipt of the BFFO would apply, which is the Major physical Augment interval; likewise if three (3) items from the Simple Augment category are requested on the same request for a virtual Collocation arrangement, then an interval of seventy-five (75) days from the receipt of the BFFO would apply, which is the Major virtual Augment interval).

7.1.4.8 If Sprint submits an Augment that includes one (1) Augment item from two (2) separate categories in Sections 7.1.4.1, 7.1.4.2 and 7.1.4.3 above, the Augment interval associated with the highest Augment category will apply (e.g., if an item from the Minor Augment category and an item from the Intermediate Augment category are requested on the same request, then an interval of sixty (60) days from the receipt of the BFFO would apply, which is the interval associated with the Intermediate Augment category).

7.1.4.9 All Augments not expressly included in the Simple, Minor, Intermediate or Major Augment categories, as outlined above, will be placed into the appropriate category as negotiated by Sprint and AT&T. If Sprint and AT&T are unable to determine the appropriate category through negotiation, then the appropriate Major Augment category, identified in Sections 7.1.4.4 and Section 7.1.4.5 above, would apply based on whether the Augment is for Sprint's physical or virtual Collocation Space.

7.1.4.10 Individual application fees associated with Simple, Minor and Intermediate Augments are contained in Exhibit C. If Sprint requests multiple items from different Augment categories, AT&T will bill Sprint the Augment application fee, as identified in Exhibit C, associated with the higher Augment category only. The appropriate application fee will be assessed to Sprint at the time AT&T provides Sprint with the Application Response. Sprint will be assessed a Subsequent Application Fee for all Major Augments (Major Augments are defined above in Sections 7.1.4.4 and 7.1.4.5 above for physical and virtual Collocation Space, respectively). The Subsequent Application Fee is also reflected in Exhibit C.

7.2 Joint Planning. Unless otherwise agreed to by the Parties, a joint planning meeting or other method of joint planning between AT&T and Sprint will commence within a maximum of twenty (20) days from AT&T's receipt of a BFFO. At such meeting, the Parties will agree to the preliminary design of the Collocation Space and the equipment configuration requirements, as reflected in the application and affirmed in the BFFO.

7.3 Permits. Each Party, its agent(s) or AT&T Certified Supplier(s) will diligently pursue filing for the permits required for the scope of work to be performed by that Party, its agent(s) or AT&T Certified Supplier(s) within ten (10) days of the completion of the finalized construction design and specifications.

7.4 Central Office Circuit Facility Assignments

7.4.1 Unless otherwise specified, AT&T will provide Circuit Facility Assignments (CFAs) to Sprint prior to the applicable provisioning interval set forth herein (Provisioning Interval) for those AT&T Premises in which Sprint has physical Collocation Space with no POT bay or with a grandfathered POT bay provided by AT&T. AT&T cannot provide CFAs to Sprint prior to the Provisioning Interval for those AT&T Premises in which Sprint has physical Collocation Space with a POT bay provided by Sprint or virtual Collocation Space, until Sprint has provided AT&T with the following information:

7.4.1.1 For physical Central Office Collocation Space with a Sprint-provided POT bay, Sprint shall provide AT&T with a complete layout of the POT panels on an Equipment Inventory Update (EIU) form that shows the locations, speeds, etc.; or

7.4.1.2 For virtual Central Office Collocation Space, Sprint shall provide AT&T with a complete layout of Sprint's equipment on an EIU form, that includes the locations of the low speed ports and the specific frame terminations to which the equipment will be wired by Sprint's AT&T Certified Supplier.

7.4.2 AT&T cannot begin work on the CFAs until the complete and accurate EIU form has been received from Sprint. If the EIU form is provided within ten (10) days prior to the ending date of the Provisioning Interval, then the CFAs will be made available by the ending date of the Provisioning Interval. If the EIU form is not received ten (10) days prior to the ending date of the Provisioning Interval, then the CFAs will be provided within ten (10) days of AT&T's receipt of the EIU form.

7.4.3 AT&T will bill Sprint a nonrecurring charge, as set forth in Exhibit C, each time Sprint requests a resend of its original CFA information for any reason other than a AT&T error in the CFAs initially provided to Sprint.

7.5 Use of AT&T Certified Supplier. Sprint shall select a supplier which has been approved as a AT&T Certified Supplier to perform all engineering and installation work. Sprint, if a AT&T Certified Supplier or Sprint's AT&T Certified Supplier must follow and comply with all of AT&T's specifications and the following AT&T Technical Requirements: TR 73503, TR 73519, TR 73572 and TR 73564. Unless the AT&T Certified Supplier has met the requirements for

all of the required work activities, Sprint must use a different AT&T Certified Supplier for the work activities associated with transmission equipment, switching equipment and power equipment. AT&T shall provide Sprint with a list of AT&T Certified Suppliers, upon request. Sprint, if a AT&T Certified Supplier, or Sprint's AT&T Certified Supplier(s) shall be responsible for installing Sprint's equipment and associated components, extending power cabling to the AT&T power distribution frame, performing operational tests after installation is complete, and notifying AT&T's equipment engineers and Sprint upon successful completion of the installation and any associated work. When a AT&T Certified Supplier is used by Sprint, the AT&T Certified Supplier shall bill Sprint directly for all work performed for Sprint pursuant to this Attachment. AT&T shall have no liability for nor responsibility to pay, such charges imposed by Sprint's AT&T Certified Supplier. AT&T shall make available its supplier certification program to Sprint or any supplier proposed by Sprint and will not unreasonably withhold certification. All work performed by or for Sprint shall conform to generally accepted industry standards.

7.6 Alarms and Monitoring. AT&T shall place environmental alarms in the AT&T Premises for the protection of AT&T equipment and facilities. Sprint shall be responsible for the placement, monitoring and removal of environmental and equipment alarms used to service Sprint's Collocation Space. Upon request, AT&T will provide Sprint with an applicable AT&T tariffed service(s) to facilitate remote monitoring of collocated equipment by Sprint. Both Parties shall use best efforts to notify the other of any verified environmental condition (e.g., temperature extremes or excess humidity) known to that Party.

7.7 Virtual to Physical Relocation. In the event physical Collocation Space was previously denied at a AT&T Central Office due to technical reasons or space limitations and physical Collocation Space has subsequently become available, Sprint may relocate its existing virtual Collocation arrangement(s) to a physical Collocation arrangement(s) and pay the appropriate fees associated with the rearrangement or reconfiguration of the services being terminated into the virtual Collocation arrangement, as set forth in Exhibit C. If AT&T knows when additional physical Collocation Space may become available at the AT&T Central Office requested by Sprint, such information will be provided to Sprint in AT&T's written denial of physical Collocation Space. Sprint must arrange with a AT&T Certified Supplier for the relocation of equipment from a virtual Collocation Space to a physical Collocation Space and will bear the cost of such relocation, including the costs associated with moving the services from the virtual Collocation Space to the new physical Collocation Space.

7.7.1 In Alabama, AT&T will complete a relocation of a virtual collocation arrangement to a cageless physical collocation arrangement within sixty (60) days from AT&T's receipt of a BFFO and from a virtual collocation arrangement to a caged physical collocation arrangement within ninety (90) days from AT&T's receipt of a BFFO.

7.8 Virtual to Physical Conversion (In-Place)

7.8.1 Virtual collocation arrangements in Central Offices may be converted to "in-place" physical caged collocation arrangements if the potential conversion meets all of the following criteria: (1) there is no change in the amount of equipment or the configuration of the equipment that was in the virtual Collocation Space; (2) the conversion of the virtual collocation arrangement will not cause the equipment or the results of that conversion to be located in a space that AT&T has reserved for its own future needs; and (3) any changes to the arrangement can be accommodated by existing power, HVAC, and other requirements. Unless otherwise specified herein, AT&T will complete virtual to physical Collocation Space conversions (in-place) within sixty (60) days from receipt of the BFFO. AT&T will bill Sprint an Administrative Only Application Fee, as set forth in Exhibit C, on the date AT&T provides an Application Response to Sprint.

7.8.2 In Alabama and Tennessee, AT&T will complete virtual to physical conversions (in place) within thirty (30) days from receipt of the BFFO as long as the conversion meets all of the criteria specified in Section 7.8.1 above.

7.9 Cancellation. Unless otherwise specified in this Attachment, if at any time prior to Space Acceptance, Sprint cancels its order for Collocation Space (Cancellation), AT&T will bill the applicable nonrecurring charge(s) for any and all work processes for which work has begun or been completed. In Florida, if Sprint cancels its order for Collocation Space at any time prior to the Space Ready Date, no cancellation fee shall be assessed by AT&T; however, Sprint will be responsible for reimbursing AT&T for any costs specifically incurred by AT&T on behalf of Sprint up to the date that the written notice of cancellation was received by AT&T. In Georgia, if Sprint cancels its order for Collocation Space at any time prior to space acceptance, AT&T will bill Sprint for all costs incurred prior to the date of Cancellation and for any costs incurred as a direct result of the Cancellation, not to exceed the total amount that would have been due had the Firm Order not been canceled.

7.10 Licenses. Sprint, at its own expense, will be solely responsible for obtaining from governmental authorities, and any other appropriate agency, entity, or person, all rights, privileges, permits, licenses and certificates necessary or required to operate as a provider of telecommunications services to the public or to build-out, equip and/or occupy Collocation Space in a AT&T Premises.

7.11 Environmental Compliance. The Parties agree to utilize and adhere to the Environmental Hazard Guidelines identified in Exhibit A attached hereto.

8 Rates and Charges

8.1 Rates. Sprint agrees to pay the rates and charges identified in Exhibit C attached hereto.

8.1.1 In Tennessee, if Sprint elects the TRA rates as set forth in Exhibit C, the additional language also set forth in Exhibit C for Application Fee, Space Preparation, Floor Space and Caged Collocation Power Usage metering, will be effective in conjunction with the remaining terms and conditions of this

Attachment.

8.1.2 Should Sprint elect to transition to the TRA Option after the execution of this Agreement, Sprint shall notify AT&T in writing sixty (60) days prior to the implementation of this election.

8.2 Application Fees. AT&T shall assess any nonrecurring application fees within thirty (30) days of the date that AT&T provides an Application Response to Sprint or on Sprint's next scheduled monthly billing statement.

8.3 Recurring Charges

8.3.1 If Sprint has met the applicable fifteen (15) day acceptance walk through interval specified in Section 4.2 above, billing for recurring charges will begin upon the Space Acceptance Date. In the event Sprint fails to complete an acceptance walk through within the applicable fifteen (15) day interval, billing for recurring charges will commence on the Space Ready Date. If Sprint occupies the space prior to the Space Ready Date, the date Sprint occupies the space is deemed the Space Acceptance Date and billing for recurring charges will begin on that date. The billing for all applicable monthly recurring charges will begin in Sprint's next billing cycle and will include any prorated charges for the period from Sprint's Space Acceptance Date or Space Ready Date, whichever is appropriate pursuant to Section 4.2 above, to the date the bill is issued by AT&T.

8.3.2 Unless otherwise stated in Section 8.6 below, monthly recurring charges for -48V DC power will be assessed per fused ampere (amp), per month, based upon the total number of fused amps of power capacity requested by Sprint on Sprint's Initial Collocation Application and all Subsequent Collocation Applications, which may either increase or decrease the originally requested, and any subsequently augmented, number of fused amps of power capacity requested, consistent with Commission orders.

8.3.3 AT&T shall have the right to inspect and inventory any DC power fuse installations at a AT&T BDFB or DC power circuit installations at AT&T's main power board for any Sprint collocation arrangement, to verify that the total number of fused amps of power capacity installed by Sprint's AT&T Certified Supplier matches the number of fused amps of DC power capacity requested by Sprint on Sprint's Initial Application and all Subsequent Applications. If AT&T determines that Sprint's AT&T Certified Supplier has installed more DC capacity than Sprint requested on its Initial Application and all Subsequent Applications, AT&T shall notify Sprint in writing of such discrepancy and shall assess Sprint for the additional DC power fuse/circuit capacity from the Space Acceptance Date or Space Ready Date, whichever is applicable pursuant to Section 8.3.1 above, for the most recent Initial Application or Subsequent Application, submitted for such collocation arrangement. AT&T shall also revise Sprint's recurring DC power charges, on a going-forward basis, to reflect the higher number of fused amps of power capacity available for the collocation arrangement.

8.4 Nonrecurring Charges. Unless specified otherwise herein, AT&T shall assess nonrecurring charges, including all application fees, within thirty (30) days of the

date that AT&T provides an Application Response to Sprint or on Sprint's next scheduled monthly billing statement, if Sprint's current month's billing cycle has already closed. Nonrecurring charges associated with the processing of the Firm Order for collocation space preparation (Firm Order Processing Fee) shall be billed by AT&T within thirty (30) days of AT&T's confirmation of Sprint's BFFO or on Sprint's next scheduled monthly billing statement.

8.5 Central Office Space Preparation. Space preparation fees consist of a nonrecurring charge for Firm Order Processing and monthly recurring charges for Central Office Modifications and Common Systems Modifications. For all states except Florida, Sprint shall remit the payment of the nonrecurring Firm Order Processing Fee coincident with the submission of Sprint's BFFO. In Florida, the nonrecurring Firm Order Processing Fee will be billed by AT&T, pursuant to Section 8.4 above. The monthly recurring charge for Central Office Modifications will be assessed per arrangement, per square foot, for both caged and cageless physical Collocation Space. The monthly recurring charge for Common Systems Modifications will be assessed per arrangement, per square foot for cageless physical Collocation Space and on a per cage basis for caged physical Collocation Space. These charges recover the costs associated with preparing the Collocation Space, which includes, but is not limited to, the following items: a survey, engineering of the Collocation Space, and design and modification costs for network, building and support systems.

8.6 Central Office Floor Space. The Floor Space Charge includes reasonable charges for lighting, HVAC, and other allocated expenses associated with maintenance of the AT&T Premises; however, this charge does not include any expenses associated with AC or DC power supplied to Sprint's Collocation Space for the operation of Sprint's equipment. For caged physical Collocation Space, Sprint shall pay floor space charges based upon the number of square feet enclosed. The minimum size for caged Collocation Space is fifty (50) square feet. Additional caged Collocation Space may be requested in increments of fifty (50) square feet. For cageless Collocation Space, Sprint shall pay floor space charges based upon the following floor space calculation: [(depth of the equipment lineup in which the rack is placed) + (0.5 x maintenance aisle depth) + (0.5 x wiring aisle depth)] x (width of rack and spacers). For purposes of this calculation, the depth of the equipment lineup shall consider the footprint of equipment racks plus any equipment overhang. AT&T will assign cageless Collocation Space in conventional equipment rack lineups where feasible. In the event Sprint's collocated equipment requires special cable racking, an isolated ground plane, or any other considerations and treatment which prevents placement within conventional equipment rack lineups, Sprint shall be required to request an amount of floor space sufficient to accommodate the total equipment arrangement.

8.7 Remote Site Bay Space. In a Remote Site, the bay space charge recovers the costs associated with air conditioning, ventilation and other allocated expenses for the maintenance of the Remote Site Location, and includes the amperage

necessary to power Sprint's equipment. Sprint shall remit bay space charges based upon the number of bays requested. AT&T will assign Remote Site Collocation Space in conventional Remote Site bay lineups where feasible.

8.8 Power

8.8.1 In a Central Office AT&T shall make available -48V DC power for Sprint's Collocation Space at a AT&T BDFB. When obtaining DC power from a AT&T BDFB, Sprint's fuses and power cables (for the A & B feeds) must be engineered (sized), and installed by Sprint's AT&T Certified Supplier, in accordance with the number of fused amps of DC power requested by Sprint on Sprint's Initial Application and any Subsequent Applications. Sprint is also responsible for contracting with a AT&T Certified Supplier to run the power distribution feeder cable from the AT&T BDFB to the equipment in Sprint's Collocation Space. The AT&T Certified Supplier contracted by Sprint must provide AT&T with a copy of the engineering power specifications prior to the day on which Sprint's equipment becomes operational (hereinafter "Commencement Date"). AT&T will provide the common power feeder cable support structure between the AT&T BDFB and Sprint's Collocation Space. Sprint shall contract with a AT&T Certified Supplier who shall be responsible for performing those power provisioning activities required to enable Sprint's equipment to become operational, which may include, but are not limited to, the installation, removal or replacement of the following: dedicated power cable support structure within Sprint's Collocation Space, power cable feeds and terminations of the power cabling. Sprint and Sprint's AT&T Certified Supplier shall comply with all applicable NEC, AT&T TR 73503, Telcordia and ANSI Standards that address power cabling, installation and maintenance.

8.8.1.1 At a Remote Site, AT&T shall make available -48V DC power for Sprint's Remote Collocation Space at a BDFB within the Remote Site Location. The charge for power shall be assessed as part of the recurring charge for bay space, as referenced in Section 8.7 above. If the power requirements for Sprint's equipment exceed the capacity available, then such additional power requirements shall be assessed on an individual case basis.

8.8.2 In Florida Central Offices only, subject to technical feasibility, commercial availability and safety limitations, AT&T will permit Sprint to request DC power in five (5) amp increments from five (5) amps up to one hundred (100) amps from the AT&T BDFB. However, in accordance with industry standard fuse sizing, Sprint may request that AT&T provision DC power of seventy (70) amps or greater directly from AT&T's main power board. The industry standard fuse size (which is a circuit breaker on the main power board) available at a AT&T main power board in all AT&T Premises is a two hundred twenty-five (225) amp circuit breaker.

8.8.3 AT&T will revise Sprint's Central Office recurring power charges, in accordance with Section 8.3 above, to reflect a power upgrade when Sprint submits a Subsequent Application requesting an increase in the number of fused amps it is

currently receiving from AT&T for its Collocation Space. If Sprint's existing fuses and power cables (for the A&B power feed) are not sufficient to support the additional number of fused amps requested, Sprint's AT&T Certified Supplier shall perform whatever activities are necessary, which may include the installation of new/additional fuses or power cables, to comply with the appropriate NEC, AT&T TR 73503, Telcordia and ANSI Standards, as well as the requirements noted in Sections 8.7 and 8.7.1 above. Sprint's AT&T Certified Supplier shall provide notification to AT&T when these activities have been completed.

8.8.4 AT&T will revise Sprint's Central Office recurring power charges, in accordance with Section 8.3 above, to reflect a power reduction upon AT&T's receipt of the Power Reduction Form from Sprint, certifying the completion of the power reduction work, including the removal of any associated power cabling by Sprint's AT&T Certified Supplier. Notwithstanding the foregoing, if Sprint's AT&T Certified Supplier has not removed or, at AT&T's discretion, cut the power cabling within thirty (30) days, the power reduction will not become effective until the cabling is removed or, at AT&T's discretion, cut by Sprint's AT&T Certified Supplier and Sprint shall pay for the amount of power that had been requested prior to the power reduction request for the period up to the date the power cabling is actually removed.

8.8.5 If Sprint requests an increase or a reduction in the amount of power that AT&T is currently providing in a Central Office, Sprint must submit a Subsequent Application. In all states other than Florida and Tennessee if no modification to the Collocation Space is requested other than the increase or reduction in power, the Simple Augment fee will apply. In Florida and Tennessee the Power Reconfiguration Only Application Fee as set forth in Exhibit C will apply. If modifications are requested in addition to the increase or reduction of power, the Subsequent Application Fee will apply. AT&T will bill this nonrecurring fee on the date that AT&T provides an Application Response to Sprint's Subsequent Application.

8.8.5.1 In Central Offices in Alabama and Louisiana, if Sprint has existing power configurations currently served from the AT&T main power board and requests that its power be reconfigured to connect to a AT&T BDFB, in a specific AT&T Premises, Sprint must submit a Subsequent Application to AT&T. AT&T will provide a response to such application within seven (7) days and no Simple Augment Application Fee will be assessed by AT&T for this one time only power reconfiguration to a AT&T BDFB. For any power reconfigurations thereafter, Sprint will submit a Subsequent Application and the appropriate Simple Augment Application Fee will apply.

8.8.6 If Sprint elects to install its own DC Power Plant, AT&T shall provide AC power to feed Sprint's DC Power Plant. Charges for AC power will be assessed on a per breaker ampere, per month basis, pursuant to the rates specified in Exhibit C. The AC power rates include recovery for the provision of commercial and standby AC power. When obtaining power from a AT&T service panel, protection devices

and power cables must be engineered (sized) and installed by Sprint's AT&T Certified Supplier, with the exception that AT&T shall engineer and install protection devices and power cables for Adjacent Collocation. Sprint's AT&T Certified Supplier must provide a copy of the engineering power specifications prior to the Commencement Date. AC power voltage and phase ratings shall be determined on a per location basis. At Sprint's option, Sprint may arrange for AC power in an adjacent collocation arrangement from a retail provider of electrical power.

8.8.7 Sprint shall contract with a AT&T Certified Supplier to perform the installation and removal of dedicated power cable support structure within Sprint's arrangement and terminations of cable within the Collocation Space.

8.8.8 Fused Amp Billing. In all states, except as otherwise set forth in this Agreement, AT&T shall make available -48V DC power on a per fused amp, per month basis, pursuant to the following:

For power provisioned from a BDFB. The number of fused amps requested by Sprint on its collocation application for power that is being provisioned from a AT&T BDFB will be multiplied by the DC power fused amp rate set forth in Exhibit C. A minimum of ten (10) fused amps is required.

For existing power configurations that are provisioned from AT&T's main power board. The number of fused amps made available at the main power board, in increments of two hundred and twenty-five (225) amps/main power board circuit, will be multiplied by the DC power fused amp rate set forth in Exhibit C.

8.8.9 Florida Power Usage Option

8.8.9.1 In Central Offices in Florida only, Sprint may request that -48 DC power provisioned by AT&T to Sprint's Collocation Space be assessed per amp, per month based upon amps used, pursuant to the rates set forth in Exhibit C. Monthly recurring power charges will be assessed on the Space Acceptance Date or Space Ready Date, whichever is appropriate, pursuant to Section 8.3 above. If Sprint desires to convert existing physical collocation arrangements to the Florida Power Usage Option (hereinafter "FL Option"), then the monthly recurring power charges that are applicable to the FL Option, contained in Exhibit C, will be assessed on the Space Ready Date associated with the Subsequent Application submitted by Sprint to convert an existing collocation arrangement to the FL Option. The monthly recurring charges for DC power, under the FL Option, shall be calculated and applied based on the amount of power Sprint requests that it be allowed to draw at a given time to a specific physical collocation arrangement in a particular AT&T Premises on Sprint's Initial Application or Subsequent Application. AT&T shall allow Sprint at Sprint's option, to order a power feed that is capable of delivering a higher DC power level but to fuse this power feed so as to allow a power level less than the feed's maximum to be drawn by Sprint. AT&T is not required to build its central office power infrastructure to meet

Sprint's forecasted DC power demand. Sprint must specify on its Initial or Subsequent Application the power level it wishes to be able to draw from AT&T's power plant for each existing collocation arrangement Sprint converts to the FL Option or for any new collocation arrangements Sprint establishes under the FL Option.

8.8.9.2 AT&T, at any time and at its own expense, shall have the right to verify the accuracy of Sprint's power usage under the FL Option for a specific collocation arrangement in a particular AT&T Premises, based on a meter reading(s) taken by AT&T of the amount of power being consumed by Sprint's collocation arrangement. AT&T may perform its own meter reading(s) via any method it chooses, such as, but not limited to, a clamp-on ammeter. If the meter reading(s) varies by more than ten percent (10%) or five (5) amps from the power usage that has been requested by Sprint for the collocation arrangement, under the FL Option, the Parties agree to work cooperatively to reconcile such discrepancy and establish the appropriate usage figure in a reasonable and expeditious manner. If the Parties suAT&Tantiate AT&T's reading, then AT&T shall adjust Sprint's billing to reflect AT&T's power reading beginning with the first day of the month immediately following the date of the last metered reading taken by AT&T.

8.8.9.3 AT&T shall assess Sprint a monthly recurring charge for DC power under the FL Option, as set forth in Exhibit C. Sprint shall notify AT&T of any change in its DC power usage by submitting a Subsequent Application, which reflects the new DC power level desired by Sprint. The requested change in DC power usage will be reflected in Sprint's next scheduled monthly billing cycle.

8.8.10 Tennessee Caged Collocation Power Usage Metering Option. In Central Offices in Tennessee only, Sprint may request that DC power provisioned by AT&T to Sprint's caged Collocation Space be assessed pursuant to the orders entered by the Tennessee Regulatory Authority in Dockets 97-01262, 99-00430, and 00-00544 for Collocation for Tennessee. By electing the TRA Option, Sprint accepts the TRA rates, terms and conditions of Exhibit C in their entirety in conjunction with the other terms and conditions of Attachment 4.

8.8.11 In Alabama and Louisiana, Sprint has the option to purchase power directly from an electric utility company. Under such option, Sprint is responsible for contracting with the electric utility company for its own power feed and meter and is financially responsible for purchasing all equipment necessary to accomplish the arrangement, including inverters, batteries, power boards, bus bars, BDFBs, backup power supplies and cabling. The actual work to install this arrangement must be performed by a AT&T Certified Supplier hired by Sprint. Sprint's AT&T Certified Supplier must comply with all applicable safety codes, including the NEC and National Electric Safety Code (NESC) standards, in the installation of this power arrangement. If Sprint currently has power supplied by AT&T, Sprint may request to change its Collocation Space to obtain power from an electric utility company by submitting a Subsequent Application. AT&T will waive the application fee for this Subsequent Application if no other changes are requested therein. Any floor space, cable racking, etc., utilized by Sprint in

provisioning said power will be billed by AT&T on an ICB basis.

8.8.12 In South Carolina, Sprint has the option to purchase power directly from an electric utility company where technically feasible and where space is available in a requested AT&T Premises. Under such option, Sprint is responsible for contracting with the electric utility company for its own power feed and meter, and is financially responsible for purchasing all equipment necessary to accomplish the conversion of the commercial AC power to DC power, including inverters, batteries, power boards, bus bars, BDFBs, backup power supplies and power cabling. The actual work to install this arrangement must be performed by a AT&T Certified Supplier hired by Sprint. Sprint's AT&T Certified Supplier must comply with all applicable national, regional, state and local safety, electrical, fire and building codes, including the NESC standards, in the installing of this power arrangement, just as AT&T is required to comply with these codes. Sprint must submit an application to AT&T for the appropriate amount of Collocation Space that Sprint requires in order to install this type of power arrangement. AT&T will evaluate the request and determine if the appropriate amount of space is available within the AT&T Premises for the installation of Sprint's power equipment and facilities. This type of power arrangement must be located in an appropriate area in the AT&T Premises that has been properly conditioned for the installation of power equipment and conforms to the applicable national, regional, state and local safety, electrical, fire and building codes. AT&T shall waive the application fee or any other nonrecurring charge that would otherwise be due from a CLEC that decides to reconfigure an existing collocation power arrangement so as to purchase power directly from an electric utility company as provided herein. Sprint shall be responsible for the recurring charges associated with the additional space needed in the AT&T Premises for this type of power arrangement, including space required to place associated power-related equipment and facilities (i.e., batteries, generator, fuse panel, power meter, etc.). If there is no space available for this type of power arrangement in the requested AT&T Premises, AT&T may seek a waiver of these requirements from the Commission for the AT&T Premises requested. Sprint would have the option to order its power needs directly from AT&T.

8.9 Central Office Cable Installation. Cable Installation fees will be assessed on a per entrance cable basis. This nonrecurring charge will be billed by AT&T upon receipt of Sprint's BFFO. Charges for cable racking, cable support structure and entrance fiber structure are recurring fees and will also be assessed according to the rates set forth in Exhibit C.

8.10 Central Office Cable Records. Cable Records charges apply for work activities required to build or remove existing cable records assigned to Sprint in AT&T's database systems. The VG/DS0 per cable record charge is for a maximum of thirty-six hundred (3,600) records per request. The fiber cable record charge is for a maximum of ninety-nine (99) records per request. Cable Record fees will be assessed as a nonrecurring charge, upon receipt of Sprint's BFFO, in all AT&T states, except Louisiana. In Louisiana, Cable Record fees will be assessed on a

monthly recurring charge basis, upon receipt of Sprint's BFFO. All charges will be assessed the rates set forth in Exhibit C.

8.11 Security Escort. After Sprint has used its one (1) accompanied site visit, pursuant to Section 5.12.1 above, and prior to Sprint's completion of the AT&T Security Training requirements, contained in Section 12 below, a security escort will be required when Sprint's employees, approved agent, supplier, or Guest(s) desire access to the entrance manhole or a AT&T Premises. The rates for security escort service are assessed pursuant to the fee schedule contained in Exhibit C, beginning with the scheduled escort time agreed to by the Parties. AT&T will wait for one-half (1/2) hour after the scheduled escort time to provide such requested escort service and Sprint shall pay for such half-hour charges in the event Sprint's employees, approved agent, supplier or Guest(s) fails to show up for the scheduled escort appointment.

8.12 Other. If no collocation rate element and associated rate is identified in Exhibit C, the Parties, upon request by either Party, will negotiate the rate for the specific collocation service or function identified in this Attachment.

9 Insurance

9.1 Sprint shall, at its sole cost and expense, procure, maintain, and keep in force insurance as specified in this Section and underwritten by insurance companies licensed to do business in the states applicable under this Agreement and having a Best's Insurance Rating of A-.

9.2 Sprint shall maintain the following specific coverage:

9.2.1 Commercial General Liability coverage in the amount of ten million dollars ($10,000,000) or a combination of Commercial General Liability and Excess/Umbrella coverage totaling not less than ten million dollars ($10,000,000). AT&T shall be named as an Additional Insured on the Commercial General Liability policy as specified herein.

9.2.2 Statutory Workers Compensation coverage and Employers Liability coverage in the amount of one hundred thousand dollars ($100,000) each accident, one hundred thousand dollars ($100,000) each employee by disease, and five hundred thousand dollars ($500,000) policy limit by disease.

9.2.3 All Risk Property coverage on a full replacement cost basis insuring all of Sprint's real and personal property situated on or within a AT&T Premises.

9.2.4 Sprint may elect to purchase business interruption and contingent business interruption insurance, having been advised that AT&T assumes no liability for loss of profit or revenues should an interruption of service occur.

9.3 The limits set forth in Section 9.2 above may be increased by AT&T from time to time during the term of this Agreement, upon thirty (30) days notice to Sprint, to at least such minimum limits as shall then be customary with respect to comparable occupancy of AT&T structures.

9.4 All policies purchased by Sprint shall be deemed to be primary and not contributing to or in excess of any similar coverage purchased by AT&T. All insurance must be in effect on or before the date equipment is delivered to AT&T's Premises and shall remain in effect for the term of this Agreement or until all of Sprint's property has been removed from AT&T's Premises, whichever period is longer. If Sprint fails to maintain required coverage, AT&T may pay the premiums thereon and seek reimbursement of same from Sprint.

9.5 Sprint shall submit certificates of insurance reflecting the coverage required pursuant to this Section within a minimum of ten (10) business days prior to the commencement of any work in the Collocation Space. Failure to meet this interval may result in construction and equipment installation delays. Sprint shall arrange for AT&T to receive thirty (30) business days' advance notice of cancellation or non-renewal from Sprint's insurance company. Sprint shall forward a certificate of insurance and notice of cancellation/non-renewal to AT&T at the following address:

AT&T.
Attn: Rick Management Office – Finance
17F54 AT&T Midtown Center
675 W. Peachtree Street
Atlanta, GA 30375

9.6 Sprint must conform to recommendations made by AT&T's fire insurance company to the extent AT&T has agreed to, or shall hereafter agree to, such recommendations.

9.7 Self Insurance. If Sprint's net worth exceeds five hundred million dollars ($500,000,000), Sprint may elect to request self-insurance status in lieu of obtaining any of the insurance required in Section 9.2 above. Sprint shall provide audited financial statements to AT&T thirty (30) days prior to the commencement of any work in the Collocation Space. AT&T shall then review such audited financial statements and respond in writing to Sprint in the event that self-insurance status is not granted to Sprint. If AT&T approves Sprint for self-insurance, Sprint shall annually furnish to AT&T, and keep current, evidence of such net worth that is attested to by one of Sprint's corporate officers. The ability to self-insure shall continue so long as Sprint meets all of the requirements of this Section. If Sprint subsequently no longer satisfies the requirements of this Section, Sprint is required to purchase insurance as indicated by Section 9.2 above.

9.8 The net worth requirements set forth in Section 9.7 above may be increased by AT&T from time to time during the term of this Agreement upon thirty (30) days' notice to Sprint to at least such minimum limits as shall then be customary with respect to comparable occupancy of a AT&T Premises.

9.9 Failure to comply with the provisions of this Section will be deemed a material breach of this Attachment.

10 Mechanics Lien

10.1 If any mechanics lien or other liens are filed against property of either Party (AT&T or Sprint), or any improvement thereon by reason of or arising out of any labor or materials furnished or alleged to have been furnished or to be furnished to or for the other Party or by reason of any changes, or additions to said property made at the request or under the direction of the other Party, the other Party directing or requesting those changes shall, within thirty (30) business days after receipt of written notice from the Party against whose property said lien has been filed, either pay such lien or cause the same to be bonded off the affected property in the manner provided by law. The Party causing said lien to be placed against the property of the other shall also defend at its sole cost and expense, on behalf of the other, any action, suit or proceeding which may be brought for the enforcement of such liens and shall pay any damage and discharge any judgment entered thereon.

11 Inspections

11.1 AT&T may conduct an inspection of Sprint's equipment and facilities in Sprint's Collocation Space(s) prior to the activation of facilities and/or services between Sprint's equipment and equipment of AT&T. AT&T may conduct an inspection if Sprint adds equipment and may otherwise conduct routine inspections at reasonable intervals mutually agreed upon by the Parties. AT&T shall provide Sprint with a minimum of forty-eight (48) hours or two (2) business days, whichever is greater, advance notice of all such inspections. All costs of such inspections shall be borne by AT&T.

12 Security and Safety Requirements

12.1 Unless otherwise specified, Sprint will be required, at its own expense, to conduct a statewide investigation of criminal history records for each Sprint employee hired in the past five (5) years being considered for work on a AT&T Premises, for the states/counties where the Sprint employee has worked and lived for the past five (5) years. Where state law does not permit statewide collection or reporting, an investigation of the applicable counties is acceptable. Sprint shall not be required to perform this investigation if an affiliated company of Sprint has performed an investigation of the Sprint employee seeking access, if such investigation meets the criteria set forth above. This requirement will not apply if Sprint has performed a pre-employment statewide investigation of criminal history records of the Sprint employee for the states/counties where the Sprint employee has worked and lived for the past five (5) years or, where state law does not permit a statewide investigation, an investigation of the applicable counties.

12.2 Sprint will be required to administer to its personnel assigned to the AT&T Premises security training either provided by AT&T, or meeting criteria defined by AT&T at AT&T's Interconnection Web site, www.interconnection.bellsouth.com/guides.

12.3 Sprint shall provide its employees and agents with picture identification, which must be worn and visible at all times while in Sprint's Collocation Space or other areas in or around the AT&T Premises. The photo identification card shall bear,

at a minimum, the employee's name and photo and Sprint's name. AT&T reserves the right to remove from a AT&T Premises any employee of Sprint not possessing identification issued by Sprint or who has violated any of AT&T's policies as outlined in the CLEC Security Training documents. Sprint shall hold AT&T harmless for any damages resulting from such removal of Sprint's personnel from a AT&T Premises. Sprint shall be solely responsible for ensuring that any Guest(s) of Sprint is in compliance with all subsections of this Section.

12.4 Sprint shall not assign to the AT&T Premises any personnel with records of felony criminal convictions. Sprint shall not assign to the AT&T Premises any personnel with records of misdemeanor convictions, except for misdemeanor traffic violations, without advising AT&T of the nature and gravity of the offense(s). AT&T reserves the right to refuse building access to any of Sprint's personnel who have been identified to have misdemeanor criminal convictions. Notwithstanding the foregoing, in the event Sprint chooses not to advise AT&T of the nature and gravity of any misdemeanor conviction, Sprint may, in the alternative, certify to AT&T that it shall not assign to the AT&T Premises any personnel with records of misdemeanor convictions (other than misdemeanor traffic violations).

12.4.1 Sprint shall not knowingly assign to the AT&T Premises any individual who was a former employee of AT&T and whose employment with AT&T was terminated for a criminal offense, whether or not AT&T sought prosecution of the individual for the criminal offense.

12.4.2 Sprint shall not knowingly assign to the AT&T Premises any individual who was a former supplier of AT&T and whose access to a AT&T Premises was revoked due to the commission of a criminal offense, whether or not AT&T sought prosecution of the individual for the criminal offense.

12.5 For each Sprint employee or agent hired by Sprint within the last five (5) years, who requires access to a AT&T Premises to perform work in Sprint Collocation Space(s), Sprint shall furnish AT&T certification that the aforementioned background check and security training were completed. This certification must be provided to and approved by AT&T before an employee or agent will be granted such access to a AT&T Premises. The certification will contain a statement that no felony convictions were found and certify that the employee completed the security training. If the employee's criminal history includes misdemeanor convictions, Sprint will disclose the nature of the convictions to AT&T at that time. In the alternative, Sprint may certify to AT&T that it shall not assign to the AT&T Premises any personnel with records of misdemeanor convictions, other than misdemeanor traffic violations.

12.5.1 For all other Sprint employees requiring access to a AT&T Premises pursuant to this Attachment, Sprint shall furnish AT&T, prior to an employee gaining such access, a certification that the employee is not subject to the requirements of Section 12.5 above and that security training was completed by the employee.

12.6 At AT&T's request, Sprint shall promptly remove from the AT&T Premises any

employee of Sprint that AT&T does not wish to grant access to a AT&T Premises: 1) pursuant to any investigation conducted by AT&T, or 2) prior to the initiation of an investigation if an employee of Sprint is found interfering with the property or personnel of AT&T or another collocated telecommunications carrier, provided that an investigation shall be promptly commenced by AT&T.

12.7 Security Violations. AT&T reserves the right to interview Sprint's employees, agents, suppliers, or Guests in the event of wrongdoing in or around a AT&T Premises or involving AT&T's or another collocated telecommunications carrier's property or personnel, provided that AT&T shall provide reasonable notice to Sprint's Security representative of such interview. Sprint and its employees, agents, suppliers, or Guests shall reasonably cooperate with AT&T's investigation into allegations of wrongdoing or criminal conduct committed by, witnessed by, or involving Sprint's employees, agents, suppliers, or Guests. Additionally, AT&T reserves the right to bill Sprint for all reasonable costs associated with investigations involving its employees, agents, suppliers, or Guests if it is established and mutually agreed in good faith that Sprint's employees, agents, suppliers, or Guests are responsible for the alleged act(s). AT&T shall bill Sprint for AT&T property, which is stolen or damaged, where an investigation determines the culpability of Sprint's employees, agents, suppliers, or Guests and where Sprint agrees, in good faith, with the results of such investigation. Sprint shall notify AT&T in writing immediately in the event that Sprint discovers one of its employees, agents, suppliers, or Guests already working on the AT&T Premises is a possible security risk. Upon request of the other Party, the Party who is the employer shall discipline consistent with its employment practices, up to and including removal from AT&T's Premises, any employee found to have violated the security and safety requirements of this Section. Sprint shall hold AT&T harmless for any damages resulting from such removal of Sprint's personnel from a AT&T Premises.

12.8 Use of Supplies. Unauthorized use of equipment, supplies or other property by either Party, whether or not used routinely to provide telephone service will be strictly prohibited and handled appropriately. Costs associated with such unauthorized use may be charged to the offending Party, as may be all associated investigative costs.

12.9 Use of Official Lines. Except for non-toll calls necessary in the performance of their work, neither Party shall use the telephone(s) of the other Party on AT&T's Premises. Charges for unauthorized telephone calls may be charged to the offending Party, as may be all associated investigative costs.

12.10 Accountability. Full compliance with the Security requirements of this Section shall in no way limit the accountability of either Party to the other for the improper actions of its employees, agents, suppliers, or Guests.

13 Destruction of Collocation Space

13.1 In the event a Collocation Space is wholly or partially damaged by fire, windstorm, hurricane, tornado, flood or by similar force majeure circumstances to

such an extent as to be rendered wholly unsuitable for Sprint's permitted use hereunder, then either Party may elect within ten (10) days after such damage, to terminate occupancy of the damaged Collocation Space, and if either Party shall so elect, by giving the other written notice of termination, both Parties shall stand released of and from further liability under the terms hereof. If the Collocation Space shall suffer only minor damage and shall not be rendered wholly unsuitable for Sprint's permitted use, or is damaged and the option to terminate is not exercised by either Party, AT&T covenants and agrees to proceed promptly without expense to Sprint, except for improvements not to the property of AT&T, to repair the damage. AT&T shall have a reasonable time within which to rebuild or make any repairs, and such rebuilding and repairing shall be subject to delays caused by storms, shortages of labor and materials, government regulations, strikes, walkouts, and causes beyond the control of AT&T, which causes shall not be construed as limiting factors, but as exemplary only. Sprint may, at its own expense, accelerate the rebuild of its Collocation Space and equipment provided, however, that a AT&T Certified Supplier is used and the necessary space preparation has been completed. If Sprint's acceleration of the project increases the cost of the project, then those additional charges will be incurred at Sprint's expense. Where allowed and where practical, Sprint may erect a temporary facility while AT&T rebuilds or makes repairs. In all cases where the Collocation Space shall be rebuilt or repaired, Sprint shall be entitled to an equitable abatement of rent and other charges, depending upon the unsuitability of the Collocation Space for Sprint's permitted use, until such Collocation Space is fully repaired and restored and Sprint's equipment installed therein (but in no event later than thirty (30) days after the Collocation Space is fully repaired and restored). Where Sprint has placed an Adjacent Arrangement pursuant to Section 3.4 above, Sprint shall have the sole responsibility to repair or replace said Adjacent Arrangement provided herein. Pursuant to this Section, AT&T will restore the associated services to the Adjacent Arrangement.

14 Eminent Domain

14.1 If the whole of a Collocation Space or Adjacent Arrangement shall be taken by any public authority under the power of eminent domain, then this Attachment shall terminate with respect to such Collocation Space or Adjacent Arrangement as of the date possession shall be taken by such public authority and rent and other charges for the Collocation Space or Adjacent Arrangement shall be paid up to that day with a proportionate refund by AT&T of such rent and charges as may have been paid in advance for a period subsequent to the date of the taking. If any part of the Collocation Space or Adjacent Arrangement shall be taken under eminent domain, AT&T and Sprint shall each have the right to terminate this Attachment with respect to such Collocation Space or Adjacent Arrangement and declare the same null and void, by written notice of such intention to the other Party within ten (10) days after such taking.

15 Nonexclusivity

15.1 Sprint understands that this Attachment is not exclusive and that AT&T may enter into similar agreements with other Parties. Assignment of Collocation Space pursuant to all such agreements shall be determined by space availability and made on a first come, first serve basis.

ENVIRONMENTAL AND SAFETY PRINCIPLES

The following principles provide basic guidance on environmental and safety issues when applying for and establishing physical collocation arrangements.

1. General Principles

1.1 Compliance with Applicable Law. AT&T and Sprint agree to comply with applicable federal, state, and local environmental and safety laws and regulations including U.S. Environmental Protection Agency (USEPA) regulations issued under the Clean Air Act (CAA), Clean Water Act (CWA), Resource Conservation and Recovery Act (RCRA), Comprehensive Environmental Response, Compensation and Liability Act (CERCLA), Superfund Amendments and Reauthorization Act (SARA), the Toxic SuAT&Tances Control Act (TSCA), and Occupational Safety and Healthy Act (OSHA) regulations issued under the OSHA of 1970, as amended and National Fire Protection Association (NFPA), NEC and NESC (Applicable Laws) requirements. Each Party shall notify the other if compliance inspections are conducted by regulatory agencies and/or citations are issued that relate to any aspect of this Attachment.

1.2 Notice. AT&T and Sprint shall provide notice to the other, including any Material Safety Data Sheets (MSDSs), of known and recognized physical hazards or Hazardous Chemicals existing on site or brought on site. A Hazardous Chemical inventory list is posted on an OSHA Poster and updated annually at each Central Office. This Poster is normally located near the front entrance of the building or in the lounge area. Each Party is required to provide specific notice for known potential Imminent Danger conditions. Sprint should contact 1-800-743-6737 for any AT&T MSDS required.

1.3 Practices/Procedures. AT&T may make available additional environmental control procedures for Sprint to follow when working at a AT&T Premises (See Section 2, below). These practices/procedures will represent the regular work practices required to be followed by the employees and suppliers of AT&T for environmental protection. Sprint will require its suppliers, agents, Guests, and others accessing the AT&T Premises to comply with these practices. Section 2 below lists the Environmental categories where AT&T practices should be followed by Sprint when operating in the AT&T Premises.

1.4 Environmental and Safety Inspections. AT&T reserves the right to inspect the Sprint space with proper notification. AT&T reserves the right to stop any Sprint work operation that imposes Imminent Danger to the environment, employees or other persons in or around a AT&T Premises.

1.5 Hazardous Materials Brought On Site. Any hazardous materials brought into, used, stored or abandoned at a AT&T Premises by Sprint are owned by and considered the property of Sprint. Sprint will indemnify AT&T for claims, lawsuits or damages to persons or property caused by these materials. Without

prior written AT&T approval, no suAT&Tantial new safety or environmental hazards can be created by Sprint or different hazardous materials used by Sprint at a AT&T Premises. Sprint must demonstrate adequate emergency response capabilities for the materials used by Sprint or remaining at a AT&T Premises.

1.6 Spills and Releases. When contamination is discovered at a AT&T Premises, either Party discovering the condition must notify the other Party. All Spills or Releases of regulated materials will immediately be reported by Sprint to AT&T.

1.7 Coordinated Environmental Plans and Permits. AT&T and Sprint will coordinate plans, permits or information required to be submitted to government agencies, such as emergency response plans, spill prevention control and countermeasures (SPCC) plans and community reporting. If fees are associated with filing, AT&T and Sprint will develop a cost sharing procedure. If AT&T's permit or EPA identification number must be used, Sprint must comply with all of AT&T's permit conditions and environmental processes, including environmental "best management practices (BMP)" (see Section 2, below) and the selection of AT&T disposition vendors and disposal sites.

1.8 Environmental and Safety Indemnification. AT&T and Sprint shall indemnify, defend and hold harmless the other Party from and against any claims (including, without limitation, third-party claims for personal injury or death or real or personal property damage), judgments, damages (including direct and indirect damages and punitive damages), penalties, fines, forfeitures, costs, liabilities, interest and losses arising in connection with the violation or alleged violation of any Applicable Law or contractual obligation or the presence or alleged presence of contamination arising out of the acts or omissions of the indemnifying Party, its employees, agents, suppliers, or Guests concerning its operations at a AT&T Premises.

2. Categories for Consideration of Environmental Issues

2.1 When performing functions that fall under the following Environmental categories on AT&T's Premises, Sprint agrees to comply with the applicable sections of the current issue of AT&T's Environmental and Safety Methods and Procedures (M&Ps), incorporated herein by this reference. Sprint further agrees to cooperate with AT&T to ensure that Sprint's employees, agents, suppliers and/or Guests are knowledgeable of and satisfy those provisions of AT&T's Environmental M&Ps, which apply to the specific Environmental function being performed by Sprint, its employees, agents, suppliers, and/or Guests.

2.2 The most current version of the reference documentation must be requested from Sprint's AT&T Regional Contract Manager (RCM).

Environmental Categories	Environmental Issues	Addressed By The Following Documentation

Disposal of hazardous material or other regulated material (e.g., batteries, fluorescent tubes, solvents & cleaning materials)	Compliance with all applicable local, state & federal laws and regulations Pollution liability insurance EVET approval of supplier	Std T&C 450 Fact Sheet Series 17000 Std T&C 660-3 Approved Environmental Vendor List (Contact RCM Representative)
Emergency response	Hazmat/waste release/spill fire safety emergency	Fact Sheet Series 17000 Building Emergency Operations Plan (EOP) (specific to and located on AT&T's Premises)
Contract labor/outsourcing for services with environmental implications to be performed on AT&T Premises (e.g., disposition of hazardous material/waste; maintenance of storage tanks)	Compliance with all applicable local, state and federal laws and regulations Performance of services in accordance with AT&T's environmental M&Ps Insurance	Std T&C 450 Std T&C 450-B (Contact RCM Representative for copy of appropriate E/S M&Ps.) Std T&C 660
Transportation of hazardous material	Compliance with all applicable local, state & federal laws and regulations Pollution liability insurance EVET approval of supplier	Std T&C 450 Fact Sheet Series 17000 Std T&C 660-3 Approved Environmental Vendor List (Contact RCM Representative)
Maintenance/operations work which may produce a waste Other maintenance work	Compliance with all applicable local, state & federal laws and regulations Protection of AT&T employees and equipment	Std T&C 450 29 C.F.R. § 1910.147 (OSHA Standard) 29 C.F.R. § 1910 Subpart O (OSHA Standard)
Janitorial service	All waste removal and disposal must conform to all applicable federal, state and local regulations All Hazardous Material and Waste Asbestos notification and protection of employees and equipment	Procurement Manager (CRES Related Matters)-AT&T Supply Chain Services Fact Sheet Series 17000 GU-BTEN-001BT, Chapter 3 BSP 010-170-001BS (Hazcom)
Manhole cleaning	Compliance with all applicable local, state & federal laws and regulations Pollution liability insurance EVET approval of supplier	Std T&C 450 Fact Sheet 14050 BSP 620-145-011PR Issue A, August 1996 Std T&C 660-3 Approved Environmental Vendor List (Contact RCM Representative)
Removing or disturbing building materials that may contain asbestos	Asbestos work practices	GU-BTEN-001BT, Chapter 3 for questions regarding removing or disturbing materials that contain asbestos, call the AT&T Building Service Center: AL, MS, TN, KY & LA (local area code) 557-6194 FL, GA, NC & SC (local area code) 780-2740

3. Definitions

Generator. Under RCRA, the person whose act produces a Hazardous Waste, as

defined in 40 C.F.R. § 261, or whose act first causes a Hazardous Waste to become subject to regulation. The Generator is legally responsible for the proper management and disposal of Hazardous Wastes in accordance with regulations.

Hazardous Chemical. As defined in the U.S. OSHA hazard communications standard (29 C.F.R. § 1910.1200), any chemical which is a health hazard or physical hazard.

Hazardous Waste. As defined in Section 1004 of RCRA.

Imminent Danger. Any conditions or practices at a AT&T Premises which are such that a danger exists which could reasonably be expected to cause immediate death or serious harm to people or immediate significant damage to the environment or natural resources.

Spill or Release. As defined in Section 101 of CERCLA.

4. Acronyms

RCM – Regional Collocation Manager (f/k/a Account Team Collocation Coordinator)

CRES – Corporate Real Estate and Services (formerly PS&M)

DEC/LDEC – Department Environmental Coordinator/Local Department Environmental Coordinator

E/S – Environmental/Safety

EVET – Environmental Vendor Evaluation Team

GU-BTEN-001BT – AT&T Environmental Methods and Procedures

NESC – National Electrical Safety Codes

P&SM – Property & Services Management

Std T&C – Standard Terms & Conditions

COLLOCATION - Alabama

Att: 4 Exh: B

CATEGORY	RATE ELEMENTS	Interim	Zone	BCS	USOC	RATES($) Rec	Nonrecurring First	Nonrecurring Add'l	Nonrecurring Disconnect First	Nonrecurring Disconnect Add'l	Svc Order Submitted Elec per LSR	Svc Order Submitted Manually per LSR	Incremental Charge - Manual Svc Order vs. Electronic-1st	Incremental Charge - Manual Svc Order vs. Electronic-Add'l	Incremental Charge - Manual Svc Order vs. Electronic-Disc 1st	Incremental Charge - Manual Svc Order vs. Electronic-Disc Add'l
											OSS Rates($)					
							First	Add'l	First	Add'l	SOMEC	SOMAN	SOMAN	SOMAN	SOMAN	SOMAN
PHYSICAL COLLOCATION																
Application																
	Physical Collocation - Initial Application Fee			CLO	PE1BA		1,879.48		0.51							
	Physical Collocation - Subsequent Application Fee			CLO	PE1CA		1,566.60		0.51							
	Physical Collocation - Co-Carrier Cross Connects/Direct Connect, Application Fee, per application			CLO	PE1DT		584.22									
	Physical Collocation Administrative Only - Application Fee			CLO	PE1BL		742.15									
	Physical Collocation - Application Cost, Simple Augment			CLO	PE1KS		594.41		1.21							
	Physical Collocation - Application Cost, Minor Augment			CLO	PE1KM		833.47		1.21							
	Physical Collocation - Application Cost, Intermediate Augment			CLO	PE1K1		1,058.00		1.21							
	Physical Collocation - Application Cost - Major Augment			CLO	PE1KJ		2,410.00		1.21							
Space Preparation																
	Physical Collocation - Floor Space, per sq feet			CLO	PE1PJ	3.22										
	Physical Collocation - Space Enclosure, welded wire, first 50 square feet			CLO	PE1BX	140.99										
	Physical Collocation - Space enclosure, welded wire, first 100 square feet			CLO	PE1BW	156.33										
	Physical Collocation - Space enclosure, welded wire, each additional 50 square feet			CLO	PE1CW	15.34										
	Physical Collocation - Space Preparation - C.O. Modification per square ft.			CLO	PE1SK	1.96										
	Physical Collocation - Space Preparation, Common Systems Modifications-Cageless, per square foot			CLO	PE1SL	2.62										
	Physical Collocation - Space Preparation - Common Systems Modifications-Caged, per cage			CLO	PE1SM	88.86										
	Physical Collocation - Space Preparation - Firm Order Processing			CLO	PE1SJ		600.71									
	Physical Collocation - Space Availability Report, per Central Office Requested			CLO	PE1SR		1,075.17									
Power																
	Physical Collocation - Power, -48V DC Power - per Fused Amp Requested			CLO	PE1PL	7.83										
	Physical Collocation - Power, 120V AC Power, Single Phase, per Breaker Amp			CLO	PE1FB	4.91										
	Physical Collocation - Power, 240V AC Power, Single Phase, per Breaker Amp			CLO	PE1FD	9.84										
	Physical Collocation - Power, 120V AC Power, Three Phase, per Breaker Amp			CLO	PE1FE	14.74										
	Physical Collocation - Power, 277V AC Power, Three Phase, per Breaker Amp			CLO	PE1FG	34.06										
Cross Connects (Cross Connects, Co-Carrier Cross Connects, and Ports)																
	Physical Collocation - 2-wire cross-connect, loop, provisioning			UEANL,UEQ, UNCNX, UEA, UCL, UAL, UHL, UDN, UNCVX	PE1P2	0.03	12.30	11.80	6.03	5.44						
	Physical Collocation - 4-wire cross-connect, loop, provisioning			UEA, UHL, UNCVX, UNCDX, UCL, UDL	PE1P4	0.05	12.39	11.87	6.39	5.73						
	Physical Collocation -DS1 Cross-Connect for Physical Collocation, provisioning			WDS1L, WDS1S, UXTD1, ULDD1, USLEL, UNLD1, U1TD1, UNC1X, UEPSR, UEPSB, UEPSE, UEPSP, USL, UEPEX, UEPDX	PE1P1	1.11	22.03	15.93	6.40	5.79						
	Physical Collocation - DS3 Cross-Connect, provisioning			UE3, U1TD3, UXTD3, UXTS1, UNC3X, UNCSX, ULDD3, U1TS1, ULDS1, UNLD3, UEPEX, UEPDX, UEPSR, UEPSB, UEPSE, UEPSP	PE1P3	14.16	20.89	15.20	7.38	5.92						

COLLOCATION - Alabama

Att: 4 Exh: B

CATEGORY	RATE ELEMENTS	Interim	Zone	BCS	USOC	RATES($) Rec	Nonrecurring First	Nonrecurring Add'l	Nonrecurring Disconnect First	Nonrecurring Disconnect Add'l	Svc Order Submitted Elec per LSR	Svc Order Submitted Manually per LSR	Incremental Charge - Manual Svc Order vs. Electronic- 1st	Incremental Charge - Manual Svc Order vs. Electronic- Add'l	Incremental Charge - Manual Svc Order vs. Electronic- Disc 1st	Incremental Charge - Manual Svc Order vs. Electronic- Disc Add'l
											OSS Rates($)					
							First	Add'l	First	Add'l	SOMEC	SOMAN	SOMAN	SOMAN	SOMAN	SOMAN
	Physical Collocation - 2-Fiber Cross-Connect			CLO, ULDO3, ULD12, ULD48, U1TO3, U1T12, U1T48, UDLO3, UDL12, UDF	PE1F2	2.81	20.89	15.20	7.38	5.92						
	Physical Collocation - 4-Fiber Cross-Connect			ULDO3, ULD12, ULD48, U1TO3, U1T12, U1T48, UDLO3, UDL12, UDF, UDFCX	PE1F4	4.99	25.55	19.86	9.71	8.25						
	Physical Collocation - Co-Carrier Cross Connects/Direct Connect - Fiber Cable Support Structure, per linear foot, per Cable.			CLO	PE1ES	0.0011										
	Physical Collocation - Co-Carrier Cross Connect/Direct Connect - Copper/Coax Cable Support Structure, per linear foot, per cable.			CLO	PE1DS	0.0016										
	Physical Collocation 2-Wire Cross Connect, Port			UEPSR, UEPSP, UEPSE, UEPSB, UEPSX, UEP2C	PE1R2	0.03	12.30	11.80	6.03	5.44						
	Physical Collocation 4-Wire Cross Connect, Port			UEPEX, UEPDD	PE1R4	0.05	12.39	11.87	6.39	5.73						
Security																
	Physical Collocation - Security Escort for Basic Time - normally scheduled work, per half hour			CLO	PE1BT		16.93	10.73								
	Physical Collocation - Security Escort for Overtime - outside of normally scheduled working hours on a scheduled work day, per half hour			CLO	PE1OT		22.05	13.86								
	Physical Collocation - Security Escort for Premium Time - outside of scheduled work day, per half hour			CLO	PE1PT		27.17	16.98								
	Physical Collocation - Security Access System - Security System per Central Office			CLO	PE1AX	45.70										
	Physical Collocation -Security Access System - New Card Activation, per Card Activation (First), per State			CLO	PE1A1	0.05	27.79									
	Physical Collocation-Security Access System-Administrative Change, existing Access Card, per Request, per State, per Card			CLO	PE1AA		7.79									
	Physical Collocation - Security Access System - Replace Lost or Stolen Card, per Card			CLO	PE1AR		22.78									
	Physical Collocation - Security Access - Initial Key, per Key			CLO	PE1AK		13.10									
	Physical Collocation - Security Access - Key, Replace Lost or Stolen Key, per Key			CLO	PE1AL		13.10									
CFA																
	Physical Collocation - CFA Information Resend Request, per premises, per arrangement, per request			CLO	PE1C9		77.56									
Cable Records - Note: The rates in the First & Additional columns will actually be billed as "Initial I" and "Subsequent S" respectively																
	Physical Collocation - Cable Records, per request			CLO	PE1CR		I 759.29	S 488.11	133.00							
	Physical Collocation, Cable Records, VG/DS0 Cable, per cable record (maximum 3600 records)			CLO	PE1CD		326.92		189.12							
	Physical Collocation, Cable Records, VG/DS0 Cable, per each 100 pair			CLO	PE1CO		4.81		5.90							
	Physical Collocation, Cable Records, DS1, per T1 TIE			CLO	PE1C1		2.25		2.76							
	Physical Collocation, Cable Records, DS3, per T3 TIE			CLO	PE1C3		7.88		9.66							
	Physical Collocation - Cable Records, Fiber Cable, per cable record (maximum 99 records)			CLO	PE1CB		84.49		77.13							
	Physical Collocation, Cable Records,CAT5/RJ45			CLO	PE1C5		2.25		2.76							
Virtual to Physical																
	Physical Collocation - Virtual to Physical Collocation Relocation, per Voice Grade Circuit			CLO	PE1BV		33.00									
	Physical Collocation - Virtual to Physical Collocation Relocation, per DSO Circuit			CLO	PE1BO		33.00									
	Physical Collocation - Virtual to Physical Collocation Relocation, per DS1 Circuit			CLO	PE1B1		52.00									
	Physical Collocation - Virtual to Physical Collocation Relocation, per DS3 Circuit			CLO	PE1B3		52.00									

COLLOCATION - Alabama

Att: 4 Exh: B

CATEGORY	RATE ELEMENTS	Interim	Zone	BCS	USOC	RATES($) Rec	Nonrecurring First	Nonrecurring Add'l	Nonrecurring Disconnect First	Nonrecurring Disconnect Add'l	Svc Order Submitted Elec per LSR	Svc Order Submitted Manually per LSR	Incremental Charge - Manual Svc Order vs. Electronic-1st	Incremental Charge - Manual Svc Order vs. Electronic-Add'l	Incremental Charge - Manual Svc Order vs. Electronic-Disc 1st	Incremental Charge - Manual Svc Order vs. Electronic-Disc Add'l
											OSS Rates($)					
							First	Add'l	First	Add'l	SOMEC	SOMAN	SOMAN	SOMAN	SOMAN	SOMAN
	Physical Collocation - Virtual to Physical Collocation In-Place, Per Voice Grade Circuit			CLO	PE1BR		22.44									
	Physical Collocation Virtual to Physical Collocation In-Place, Per DSO Circuit			CLO	PE1BP		22.44									
	Physical Collocation - Virtual to Physical Collocation In-Place, Per DS1 Circuit			CLO	PE1BS		32.62									
	Physical Collocation - Virtual to Physical Collocation In-Place, per DS3 Circuit			CLO	PE1BE		32.62									
Entrance Cable																
	Physical Collocation - Fiber Cable Installation, Pricing, non-recurring charge, per Entrance Cable			CLO	PE1BD		859.71		22.49							
	Physical Collocation - Fiber Cable Support Structure, per Entrance Cable			CLO	PE1PM	17.11										
	Physical Collocation - Fiber Entrance Cable Installation, per Fiber			CLO	PE1ED		3.87									
VIRTUAL COLLOCATION																
Application																
	Virtual Collocation - Application Fee			AMTFS	EAF		1,205.26		0.51							
	Virtual Collocation - Co-Carrier Cross Connects/Direct Connect, Application Fee, per application			AMTFS	VE1CA		584.22									
	Virtual Collocation Administrative Only - Application Fee			AMTFS	VE1AF		742.15									
Space Preparation																
	Virtual Collocation - Floor Space, per sq. ft.			AMTFS	ESPVX	3.22										
Power																
	Virtual Collocation - Power, per fused amp			AMTFS	ESPAX	7.83										
Cross Connects (Cross Connects, Co-Carrier Cross Connects, and Ports)																
	Virtual Collocation - 2-wire cross-connect, loop, provisioning			UEANL, UEA, UDN, UAL, UHL, UCL, UEQ, UNCVX, UNCDX, UNCNX	UEAC2	0.03	12.30	11.80	6.03	5.44						
	Virtual Collocation - 4-wire cross-connect, loop, provisioning			UEA, UHL, UCL, UDL, UNCVX, UNCDX	UEAC4	0.05	12.39	11.87	6.39	5.73						
	Virtual collocation - Special Access & UNE, cross-connect per DS1			ULR, UXTD1, UNC1X, ULDD1, U1TD1, USLEL, UNLD1, USL, UEPEX, UEPDX	CNC1X	1.11	22.03	15.93	6.40	5.79						
	Virtual collocation - Special Access & UNE, cross-connect per DS3			USL, UE3, U1TD3, UXTS1, UXTD3, UNC3X, UNCSX, ULDD3, U1TS1, ULDS1, UDLSX, UNLD3, XDEST	CND3X	14.16	20.89	15.20	7.38	5.92						
	Virtual Collocation - 2-Fiber Cross Connects			UDL12, UDLO3, U1T48, U1T12, U1TO3, ULDO3, ULD12, ULD48, UDF	CNC2F	2.84	20.89	15.20	7.38	5.92						
	Virtual Collocation - 4-Fiber Cross Connects			UDL12, UDLO3, U1T48, U1T12, U1TO3, ULDO3, ULD12, ULD48, UDF	CNC4F	5.69	25.55	19.86	9.71	8.25						
	Virtual Collocation - Co-Carrier Cross Connects/Direct Connect - Fiber Cable Support Structure, per linear foot, per cable			AMTFS	VE1CB	0.0011										
	Virtual Collocation - Co-Carrier Cross Connects/Direct Connect - Copper/Coax Cable Support Structure, per linear foot, per cable			AMTFS	VE1CD	0.0016										
	Virtual Collocation 2-Wire Cross Connect, Port			UEPSX, UEPSB, UEPSE, UEPSP, UEPSR, UEP2C	VE1R2	0.03	12.30	11.80	6.03	5.44						
	Virtual Collocation 4-Wire Cross Connect, Port			UEPDD, UEPEX	VE1R4	0.05	12.39	11.87	6.39	5.73						

COLLOCATION - Alabama

Att: 4 Exh: B

CATEGORY	RATE ELEMENTS	Interim	Zone	BCS	USOC	RATES($) Rec	Nonrecurring First	Nonrecurring Add'l	Nonrecurring Disconnect First	Nonrecurring Disconnect Add'l	Svc Order Submitted Elec per LSR	Svc Order Submitted Manually per LSR	Incremental Charge - Manual Svc Order vs. Electronic- 1st	Incremental Charge - Manual Svc Order vs. Electronic- Add'l	Incremental Charge - Manual Svc Order vs. Electronic- Disc 1st	Incremental Charge - Manual Svc Order vs. Electronic- Disc Add'l
											OSS Rates($)					
							First	Add'l	First	Add'l	SOMEC	SOMAN	SOMAN	SOMAN	SOMAN	SOMAN
CFA																
	Virtual Collocation - CFA Information Resend Request, per Premises, per Arrangement, per request			AMTFS	VE1QR		77.56									
Cable Records - Note: The rates in the First & Additional columns will actually be billed as "Initial I" & "Subsequent S" respectively																
	Virtual Collocation Cable Records - per request			AMTFS	VE1BA		I 759.29	S 488.11	133.00							
	Virtual Collocation Cable Records - VG/DS0 Cable, per cable record			AMTFS	VE1BB		326.92		189.12							
	Virtual Collocaiton Cable Records - VG/DS0 Cable, per each 100 pair			AMTFS	VE1BC		4.81		5.90							
	Virtual Collocation Cable Records - DS1, per T1TIE			AMTFS	VE1BD		2.25		2.76							
	Virtual Collocation Cable Records - DS3, per T3TIE			AMTFS	VE1BE		7.88		9.66							
	Virtual Collocation Cable Records - Fiber Cable, per 99 fiber records			AMTFS	VE1BF		84.49		77.13							
	Virtual Collocation Cable Records - CAT 5/RJ45			AMTFS	VE1B5		2.25		2.76							
Security																
	Virtual collocation - Security escort, basic time, normally scheduled work hours			AMTFS	SPTBX		16.93	10.73								
	Virtual collocation - Security escort, overtime, outside of normally scheduled work hours on a normal working day			AMTFS	SPTOX		22.05	13.86								
	Virtual collocation - Security escort, premium time, outside of a scheduled work day			AMTFS	SPTPX		27.17	16.98								
Maintenance																
	Virtual collocation - Maintenance in CO - Basic, per half hour			AMTFS	CTRLX		27.93	10.73								
	Virtual collocation - Maintenance in CO - Overtime, per half hour			AMTFS	SPTOM		36.47	13.86								
	Virtual collocation - Maintenance in CO - Premium per half hour			AMTFS	SPTPM		45.02	16.98								
Entrance Cable																
	Virtual Collocation - Cable Installation Charge, per cable			AMTFS	ESPCX		859.71		22.49							
	Virtual Collocation - Cable Support Structure, per cable			AMTFS	ESPSX	14.97										
COLLOCATION IN THE REMOTE SITE																
Physical Remote Site Collocation																
	Physical Collocation in the Remote Site - Application Fee			CLORS	PE1RA		307.70		168.22							
	Cabinet Space in the Remote Site per Bay/ Rack			CLORS	PE1RB	201.42										
	Physical Collocation in the Remote Site - Security Access - Key			CLORS	PE1RD		13.10									
	Physical Collocation in the Remote Site - Space Availability Report per Premises Requested			CLORS	PE1SR		115.87									
	Physical Collocation in the Remote Site - Remote Site CLLI Code Request, per CLLI Code Requested			CLORS	PE1RE		37.56									
	Remote Site DLEC Data (BRSDD), per Compact Disk, per CO			CLORS	PE1RR		233.38									
	Power, DC Power Provisioning (Alabama Only ICB Rate)															
	Physical Collocation - Security Escort for Basic Time - normally scheduled work, per half hour			CLORS	PE1BT		16.93	10.73								
	Physical Collocation - Security Escort for Overtime - outside of normally scheduled working hours on a scheduled work day, per half hour			CLORS	PE1OT		22.05	13.86								
	Physical Collocation - Security Escort for Premium Time - outside of scheduled work day, per half hour			CLORS	PE1PT		27.17	16.98								
Adjacent Remote Site Collocation																
	Remote Site-Adjacent Collocation-Application Fee			CLORS	PE1RU		755.62	755.62								
	Remote Site-Adjacent Collocation - Real Estate, per square foot			CLORS	PE1RT	0.134										
	Remote Site-Adjacent Collocation - AC Power, per breaker amp			CLORS	PE1RS	6.27										
NOTE: If Security Escort and/or Add'l Engineering Fees become necessary for adjacent remote site collocation, the Parties will negotiate appropriate rates.																
Virtual Remote Site Collocation																
	Virtual Collocation in the Remote Site - Application Fee			VE1RS	VE1RB		307.70	307.70	168.22	168.22						
	Virtual Collocation in the Remote Site - Per Bay/Rack of Space			VE1RS	VE1RC	201.42										
	Virtual Collocation in the Remote Site - Space Availability Report per Premises requested			VE1RS	VE1RR		115.87	115.87								
	Virtual Collocation in the Remote Site - Remote Site CLLI Code Request, per CLLI Code Requested			VE1RS	VE1RL		37.56	37.56								

COLLOCATION - Alabama

Att: 4 Exh: B

CATEGORY		RATE ELEMENTS	Interim	Zone	BCS	USOC	RATES($)					Svc Order Submitted Elec per LSR	Svc Order Submitted Manually per LSR	Incremental Charge - Manual Svc Order vs. Electronic-1st	Incremental Charge - Manual Svc Order vs. Electronic-Add'l	Incremental Charge - Manual Svc Order vs. Electronic-Disc 1st	Incremental Charge - Manual Svc Order vs. Electronic-Disc Add'l
							Rec	Nonrecurring		Nonrecurring Disconnect		OSS Rates($)					
								First	Add'l	First	Add'l	SOMEC	SOMAN	SOMAN	SOMAN	SOMAN	SOMAN
ADJACENT COLLOCATION																	
		Adjacent Collocation - Space Charge per Sq. Ft.			CLOAC	PE1JA	0.14										
		Adjacent Collocation - Electrical Facility Charge per Linear Ft.			CLOAC	PE1JC	5.41										
		Adjacent Collocation - 2-Wire Cross-Connects			UEANL,UEQ,UEA,UCL, UAL, UHL, UDN	PE1JE	0.02	12.30	11.80	6.03	5.44						
		Adjacent Collocation - 4-Wire Cross-Connects			UEA,UHL,UDL,UCL	PE1JF	0.04	12.39	11.87	6.39	5.73						
		Adjacent Collocation - DS1 Cross-Connects			USL	PE1JG	1.03	22.03	15.93	6.40	5.79						
		Adjacent Collocation - DS3 Cross-Connects			UE3	PE1JH	13.95	20.89	15.20	7.38	5.92						
		Adjacent Collocation - 2-Fiber Cross-Connect			CLOAC	PE1JJ	2.36	20.89	15.20	7.38	5.92						
		Adjacent Collocation - 4-Fiber Cross-Connect			CLOAC	PE1JK	4.52	25.55	19.86	9.71	8.25						
		Adjacent Collocation - Application Fee			CLOAC	PE1JB		1,576.69		0.51							
		Adjacent Collocation - 120V, Single Phase Standby Power Rate per AC Breaker Amp			CLOAC	PE1JL	4.91										
		Adjacent Collocation - 240V, Single Phase Standby Power Rate per AC Breaker Amp			CLOAC	PE1JM	9.84										
		Adjacent Collocation - 120V, Three Phase Standby Power Rate per AC Breaker Amp			CLOAC	PE1JN	14.74										
		Adjacent Collocation - 277V, Three Phase Standby Power Rate per AC Breaker Amp			CLOAC	PE1JO	34.06										
		Adjacent Collocation - DC power provisioning (Alabama Only Mandate ICB)															
		Note: ICB means Individual Case Basis															

COLLOCATION - Florida

Att: 4 Exh: B

CATEGORY	RATE ELEMENTS	Interim	Zone	BCS	USOC	RATES($) Rec	Nonrecurring First	Nonrecurring Add'l	Nonrecurring Disconnect First	Nonrecurring Disconnect Add'l	Svc Order Submitted Elec per LSR	Svc Order Submitted Manually per LSR	Incremental Charge - Manual Svc Order vs. Electronic-1st	Incremental Charge - Manual Svc Order vs. Electronic-Add'l	Incremental Charge - Manual Svc Order vs. Electronic-Disc 1st	Incremental Charge - Manual Svc Order vs. Electronic-Disc Add'l
											OSS Rates($)					
											SOMEC	SOMAN	SOMAN	SOMAN	SOMAN	SOMAN
PHYSICAL COLLOCATION																
Application																
	Physical Collocation - Initial Application Fee			CLO	PE1BA		2,785.00		1.20							
	Physical Collocation - Subsequent Application Fee			CLO	PE1CA		2,236.00		1.20							
	Physical Collocation - Co-Carrier Cross Connects/Direct Connect, Application Fee, per application			CLO	PE1DT		564.81									
	Physical Collocation - Power Reconfiguration Only, Application Fee			CLO	PE1PR		409.50									
	Physical Collocation Administrative Only - Application Fee			CLO	PE1BL		760.91		1.20							
Space Preparation																
	Physical Collocation - Floor Space, per sq feet			CLO	PE1PJ	5.28										
	Physical Collocation - Space Enclosure, welded wire, first 50 square feet			CLO	PE1BX	171.12										
	Physical Collocation - Space enclosure, welded wire, first 100 square feet			CLO	PE1BW	189.73										
	Physical Collocation - Space enclosure, welded wire, each additional 50 square feet			CLO	PE1CW	18.61										
	Physical Collocation - Space Preparation - C.O. Modification per square ft.			CLO	PE1SK	2.38										
	Physical Collocation - Space Preparation, Common Systems Modifications-Cageless, per square foot			CLO	PE1SL	2.50										
	Physical Collocation - Space Preparation - Common Systems Modifications-Caged, per cage			CLO	PE1SM	84.93										
	Physical Collocation - Space Preparation - Firm Order Processing			CLO	PE1SJ		287.36									
	Physical Collocation - Space Availability Report, per Central Office Requested			CLO	PE1SR		572.66									
Power																
	Physical Collocation - Power, -48V DC Power - per Fused Amp Requested			CLO	PE1PL	7.80										
	Physical Collocation - Power, 120V AC Power, Single Phase, per Breaker Amp			CLO	PE1FB	5.26										
	Physical Collocation - Power, 240V AC Power, Single Phase, per Breaker Amp			CLO	PE1FD	10.53										
	Physical Collocation - Power, 120V AC Power, Three Phase, per Breaker Amp			CLO	PE1FE	15.80										
	Physical Collocation - Power, 277V AC Power, Three Phase, per Breaker Amp			CLO	PE1FG	36.47										
	Physical Collocation - Power - DC power, per Used Amp			CLO	PE1FN	10.69										
Cross Connects (Cross Connects, Co-Carrier Cross Connects, and Ports)																
	Physical Collocation - 2-wire cross-connect, loop, provisioning			UEANL,UEQ,UNCNX, UEA, UCL, UAL, UHL, UDN, UNCVX	PE1P2	0.0208	7.32	5.37	4.58	2.71						
	Physical Collocation - 4-wire cross-connect, loop, provisioning			UEA, UHL, UNCVX, UNCDX, UCL, UDL	PE1P4	0.0416	8.00	5.75	5.00	2.69						
	Physical Collocation -DS1 Cross-Connect for Physical Collocation, provisioning			WDS1L, WDS1S, UXTD1, ULDD1, USLEL, UNLD1, U1TD1, UNC1X, UEPSR, UEPSB, UEPSE, UEPSP, USL, UEPEX, UEPDX	PE1P1	0.3786	7.88	6.25	1.35	0.9899						
	Physical Collocation - DS3 Cross-Connect, provisioning			UE3, U1TD3, UXTD3, UXTS1, UNC3X, UNCSX, ULDD3, U1TS1, ULDS1, UNLD3, UEPEX, UEPDX, UEPSR, UEPSB, UEPSE, UEPSP	PE1P3	4.16	32.40	31.03	11.15	10.98						

COLLOCATION - Florida

Att: 4 Exh: B

CATEGORY	RATE ELEMENTS	Interim	Zone	BCS	USOC	RATES($) Rec	Nonrecurring First	Nonrecurring Add'l	Nonrecurring Disconnect First	Nonrecurring Disconnect Add'l	Svc Order Submitted Elec per LSR	Svc Order Submitted Manually per LSR	Incremental Charge - Manual Svc Order vs. Electronic- 1st	Incremental Charge - Manual Svc Order vs. Electronic- Add'l	Incremental Charge - Manual Svc Order vs. Electronic- Disc 1st	Incremental Charge - Manual Svc Order vs. Electronic- Disc Add'l
											OSS Rates($)					
							First	Add'l	First	Add'l	SOMEC	SOMAN	SOMAN	SOMAN	SOMAN	SOMAN
	Physical Collocation - 2-Fiber Cross-Connect			CLO, ULDO3, ULD12, ULD48, U1TO3, U1T12, U1T48, UDLO3, UDL12, UDF	PE1F2	1.71	28.26	25.85	13.78	11.01						
	Physical Collocation - 4-Fiber Cross-Connect			ULDO3, ULD12, ULD48, U1TO3, U1T12, U1T48, UDLO3, UDL12, UDF, UDFCX	PE1F4	3.34	37.92	35.51	18.20	15.44						
	Physical Collocation - Co-Carrier Cross Connects/Direct Connect - Fiber Cable Support Structure, per linear foot, per cable.			CLO	PE1ES	0.0008										
	Physical Collocation - Co-Carrier Cross Connect/Direct Connect - Copper/Coax Cable Support Structure, per linear foot, per cable.			CLO	PE1DS	0.0012										
	Physical Collocation 2-Wire Cross Connect, Port			UEPSR, UEPSP, UEPSE, UEPSB, UEPSX, UEP2C	PE1R2	0.0208	7.32	5.37	4.58	2.71						
	Physical Collocation 4-Wire Cross Connect, Port			UEPEX, UEPDD	PE1R4	0.0416	8.00	5.75	5.00	2.69						
Security																
	Physical Collocation - Security Escort for Basic Time - normally scheduled work, per half hour			CLO	PE1BT		33.65	22.05								
	Physical Collocation - Security Escort for Overtime - outside of normally scheduled working hours on a scheduled work day, per half hour			CLO	PE1OT		44.63	28.89								
	Physical Collocation - Security Escort for Premium Time - outside of scheduled work day, per half hour			CLO	PE1PT		55.62	35.73								
	Physical Collocation - Security Access System - Security System per Central Office, per Sq. Ft.			CLO	PE1AY	0.0101										
	Physical Collocation -Security Access System - New Card Activation, per Card Activation (First), per State			CLO	PE1A1		38.95									
	Physical Collocation-Security Access System-Administrative Change, existing Access Card, per Request, per State, per Card			CLO	PE1AA		8.84									
	Physical Collocation - Security Access System - Replace Lost or Stolen Card, per Card			CLO	PE1AR		28.78									
	Physical Collocation - Security Access - Initial Key, per Key			CLO	PE1AK		23.28									
	Physical Collocation - Security Access - Key, Replace Lost or Stolen Key, per Key			CLO	PE1AL		23.28									
CFA																
	Physical Collocation - CFA Information Resend Request, per premises, per arrangement, per request			CLO	PE1C9		79.52									
Cable Records - Note: The rates in the First & Additional columns will actually be billed as "Initial I" and "Subsequent S" respectively																
	Physical Collocation - Cable Records, per request			CLO	PE1CR		I 1515.00	S 973.64	256.35							
	Physical Collocation, Cable Records, VG/DS0 Cable, per cable record (maximum 3600 records)			CLO	PE1CD		646.84		362.41							
	Physical Collocation, Cable Records, VG/DS0 Cable, per each 100 pair			CLO	PE1CO		9.11		10.80							
	Physical Collocation, Cable Records, DS1, per T1 TIE			CLO	PE1C1		4.52		5.35							
	Physical Collocation, Cable Records, DS3, per T3 TIE			CLO	PE1C3		15.81		18.73							
	Physical Collocation - Cable Records, Fiber Cable, per cable record (maximum 99 records)			CLO	PE1CB		169.96		149.97							
	Physical Collocation, Cable Records,CAT5/RJ45			CLO	PE1C5		4.52		5.35							
Virtual to Physical																
	Physical Collocation - Virtual to Physical Collocation Relocation, per Voice Grade Circuit			CLO	PE1BV		33.00									
	Physical Collocation - Virtual to Physical Collocation Relocation, per DSO Circuit			CLO	PE1BO		33.00									
	Physical Collocation - Virtual to Physical Collocation Relocation, per DS1 Circuit			CLO	PE1B1		52.00									
	Physical Collocation - Virtual to Physical Collocation Relocation, per DS3 Circuit			CLO	PE1B3		52.00									

COLLOCATION - Florida

Att: 4 Exh: B

CATEGORY		RATE ELEMENTS	Interim	Zone	BCS	USOC	RATES($)					Svc Order Submitted Elec per LSR	Svc Order Submitted Manually per LSR	Incremental Charge - Manual Svc Order vs. Electronic-1st	Incremental Charge - Manual Svc Order vs. Electronic-Add'l	Incremental Charge - Manual Svc Order vs. Electronic-Disc 1st	Incremental Charge - Manual Svc Order vs. Electronic-Disc Add'l
							Rec	Nonrecurring		Nonrecurring Disconnect		OSS Rates($)					
								First	Add'l	First	Add'l	SOMEC	SOMAN	SOMAN	SOMAN	SOMAN	SOMAN
		Physical Collocation - Virtual to Physical Collocation In-Place, Per Voice Grade Circuit			CLO	PE1BR		22.51									
		Physical Collocation Virtual to Physical Collocation In-Place, Per DSO Circuit			CLO	PE1BP		22.51									
		Physical Collocation - Virtual to Physical Collocation In-Place, Per DS1 Circuit			CLO	PE1BS		32.73									
		Physical Collocation - Virtual to Physical Collocation In-Place, per DS3 Circuit			CLO	PE1BE		32.73									
	Entrance Cable																
		Physical Collocation - Fiber Cable Support Structure, per Entrance Cable			CLO	PE1PM	5.19										
		Physical Collocation - Fiber Entrance Cable per Cable (CO manhole to vault splice)			CLO	PE1EC		994.12		43.84							
		Physical Collocation - Fiber Entrance Cable Installation, per Fiber			CLO	PE1ED		7.43									
VIRTUAL COLLOCATION																	
	Application																
		Virtual Collocation - Application Fee			AMTFS	EAF		1,241.00		1.20							
		Virtual Collocation - Co-Carrier Cross Connects/Direct Connect, Application Fee, per application			AMTFS	VE1CA		564.81									
		Virtual Collocation Administrative Only - Application Fee			AMTFS	VE1AF		760.91		1.20							
	Space Preparation																
		Virtual Collocation - Floor Space, per sq. ft.			AMTFS	ESPVX	5.28										
	Power																
		Virtual Collocation - Power, per fused amp			AMTFS	ESPAX	6.95										
		Virtual Collocation - Power, DC power, per Used Amp			AMTFS	VE1PF	10.69										
	Cross Connects (Cross Connects, Co-Carrier Cross Connects, and Ports)																
		Virtual Collocation - 2-wire cross-connect, loop, provisioning			UEANL, UEA, UDN, UAL, UHL, UCL, UEQ, UNCVX, UNCDX, UNCNX	UEAC2	0.0201	7.32	5.37	4.58	2.71						
		Virtual Collocation - 4-wire cross-connect, loop, provisioning			UEA, UHL, UCL, UDL, UNCVX, UNCDX	UEAC4	0.0403	8.00	5.75	5.00	2.69						
		Virtual collocation - Special Access & UNE, cross-connect per DS1			ULR, UXTD1, UNC1X, ULDD1, U1TD1, USLEL, UNLD1, USL, UEPEX, UEPDX	CNC1X	0.3786	7.88	6.26	1.35	0.9915						
		Virtual collocation - Special Access & UNE, cross-connect per DS3			USL, UE3, U1TD3, UXTS1, UXTD3, UNC3X, UNCSX, ULDD3, U1TS1, ULDS1, UDLSX, UNLD3, XDEST	CND3X	4.16	32.40	31.03	11.15	10.98						
		Virtual Collocation - 2-Fiber Cross Connects			UDL12, UDLO3, U1T48, U1T12, U1TO3, ULDO3, ULD12, ULD48, UDF	CNC2F	1.75	28.26	25.85	13.78	11.01						
		Virtual Collocation - 4-Fiber Cross Connects			UDL12, UDLO3, U1T48, U1T12, U1TO3, ULDO3, ULD12, ULD48, UDF	CNC4F	3.50	37.92	35.51	18.20	15.44						
		Virtual Collocation - Co-Carrier Cross Connects/Direct Connect - Fiber Cable Support Structure, per linear foot, per cable			AMTFS	VE1CB	0.0008										
		Virtual Collocation - Co-Carrier Cross Connects/Direct Connect - Copper/Coax Cable Support Structure, per linear foot, per cable			AMTFS	VE1CD	0.0012										
		Virtual Collocation 2-Wire Cross Connect, Port			UEPSX, UEPSB, UEPSE, UEPSP, UEPSR, UEP2C	VE1R2	0.0201	7.32	5.37	4.58	2.71						

COLLOCATION - Florida																	Att: 4 Exh: B
CATEGORY		RATE ELEMENTS	Interim	Zone	BCS	USOC	RATES($)					Svc Order Submitted Elec per LSR	Svc Order Submitted Manually per LSR	Incremental Charge - Manual Svc Order vs. Electronic-1st	Incremental Charge - Manual Svc Order vs. Electronic-Add'l	Incremental Charge - Manual Svc Order vs. Electronic-Disc 1st	Incremental Charge - Manual Svc Order vs. Electronic-Disc Add'l
							Rec	Nonrecurring		Nonrecurring Disconnect		OSS Rates($)					
								First	Add'l	First	Add'l	SOMEC	SOMAN	SOMAN	SOMAN	SOMAN	SOMAN
		Virtual Collocation 4-Wire Cross Connect, Port			UEPDD, UEPEX	VE1R4	0.0403	8.00	5.75	5.00	2.69						
	CFA																
		Virtual Collocation - CFA Information Resend Request, per Premises, per Arrangement, per request			AMTFS	VE1QR		79.52									
	Cable Records - Note: The rates in the First & Additional columns will actually be billed as "Initial I" & "Subsequent S" respectively																
		Virtual Collocation Cable Records - per request			AMTFS	VE1BA		I 1515.00	S 973.64	256.35							
		Virtual Collocation Cable Records - VG/DS0 Cable, per cable record			AMTFS	VE1BB		646.84		362.41							
		Virtual Collocation Cable Records - VG/DS0 Cable, per each 100 pair			AMTFS	VE1BC		9.11		10.80							
		Virtual Collocation Cable Records - DS1, per T1TIE			AMTFS	VE1BD		4.52		5.35							
		Virtual Collocation Cable Records - DS3, per T3TIE			AMTFS	VE1BE		15.81		18.73							
		Virtual Collocation Cable Records - Fiber Cable, per 99 fiber records			AMTFS	VE1BF		169.96		149.97							
		Virtual Collocation Cable Records - CAT 5/RJ45			AMTFS	VE1B5		4.52		5.35							
	Security																
		Virtual collocation - Security escort, basic time, normally scheduled work hours			AMTFS	SPTBX		33.65	22.05								
		Virtual collocation - Security escort, overtime, outside of normally scheduled work hours on a normal working day			AMTFS	SPTOX		44.63	28.89								
		Virtual collocation - Security escort, premium time, outside of a scheduled work day			AMTFS	SPTPX		55.62	35.73								
	Maintenance																
		Virtual collocation - Maintenance in CO - Basic, per half hour			AMTFS	CTRLX		54.05	22.05								
		Virtual collocation - Maintenance in CO - Overtime, per half hour			AMTFS	SPTOM		72.18	28.89								
		Virtual collocation - Maintenance in CO - Premium per half hour			AMTFS	SPTPM		90.31	35.73								
	Entrance Cable																
		Virtual Collocation - Cable Installation Charge, per cable			AMTFS	ESPCX		1,473.00		43.84							
		Virtual Collocation - Cable Support Structure, per cable			AMTFS	ESPSX	4.54										
COLLOCATION IN THE REMOTE SITE																	
	Physical Remote Site Collocation																
		Physical Collocation in the Remote Site - Application Fee			CLORS	PE1RA		612.23		270.35							
		Cabinet Space in the Remote Site per Bay/ Rack			CLORS	PE1RB	154.59										
		Physical Collocation in the Remote Site - Security Access - Key			CLORS	PE1RD		23.28									
		Physical Collocation in the Remote Site - Space Availability Report per Premises Requested			CLORS	PE1SR		223.91									
		Physical Collocation in the Remote Site - Remote Site CLLI Code Request, per CLLI Code Requested			CLORS	PE1RE		73.39									
		Remote Site DLEC Data (BRSDD), per Compact Disk, per CO			CLORS	PE1RR		208.02									
		Physical Collocation - Security Escort for Basic Time - normally scheduled work, per half hour			CLORS	PE1BT		33.65	22.05								
		Physical Collocation - Security Escort for Overtime - outside of normally scheduled working hours on a scheduled work day, per half hour			CLORS	PE1OT		44.63	28.89								
		Physical Collocation - Security Escort for Premium Time - outside of scheduled work day, per half hour			CLORS	PE1PT		55.62	35.73								
	Adjacent Remote Site Collocation																
		Remote Site-Adjacent Collocation-Application Fee			CLORS	PE1RU		755.62	755.62								
		Remote Site-Adjacent Collocation - Real Estate, per square foot			CLORS	PE1RT	0.134										
		Remote Site-Adjacent Collocation - AC Power, per breaker amp			CLORS	PE1RS	6.27										
	NOTE: If Security Escort and/or Add'l Engineering Fees become necessary for adjacent remote site collocation, the Parties will negotiate appropriate rates.																
	Virtual Remote Site Collocation																
		Virtual Collocation in the Remote Site - Application Fee			VE1RS	VE1RB		612.23		270.35							
		Virtual Collocation in the Remote Site - Per Bay/Rack of Space			VE1RS	VE1RC	154.59										
		Virtual Collocation in the Remote Site - Space Availability Report per Premises requested			VE1RS	VE1RR		223.91									
		Virtual Collocation in the Remote Site - Remote Site CLLI Code Request, per CLLI Code Requested			VE1RS	VE1RL		73.39									

COLLOCATION - Florida																	Att: 4 Exh: B			
CATEGORY		RATE ELEMENTS	Interim	Zone	BCS	USOC	RATES($)					Svc Order Submitted Elec per LSR	Svc Order Submitted Manually per LSR	Incremental Charge - Manual Svc Order vs. Electronic-1st	Incremental Charge - Manual Svc Order vs. Electronic-Add'l	Incremental Charge - Manual Svc Order vs. Electronic-Disc 1st	Incremental Charge - Manual Svc Order vs. Electronic-Disc Add'l
							Rec	Nonrecurring		Nonrecurring Disconnect		OSS Rates($)					
								First	Add'l	First	Add'l	SOMEC	SOMAN	SOMAN	SOMAN	SOMAN	SOMAN
ADJACENT COLLOCATION																	
		Adjacent Collocation - Space Charge per Sq. Ft.			CLOAC	PE1JA	0.1666										
		Adjacent Collocation - Electrical Facility Charge per Linear Ft.			CLOAC	PE1JC	4.62										
		Adjacent Collocation - 2-Wire Cross-Connects			UEANL,UEQ,UEA,UCL, UAL, UHL, UDN	PE1JE	0.0194	7.32	5.37	4.58	2.71						
		Adjacent Collocation - 4-Wire Cross-Connects			UEA,UHL,UDL,UCL	PE1JF	0.0388	8.00	5.75	5.00	2.69						
		Adjacent Collocation - DS1 Cross-Connects			USL	PE1JG	0.3708	7.88	6.26	1.35	0.9915						
		Adjacent Collocation - DS3 Cross-Connects			UE3	PE1JH	4.14	32.40	31.03	11.15	10.98						
		Adjacent Collocation - 2-Fiber Cross-Connect			CLOAC	PE1JJ	1.70	28.26	25.85	13.78	11.01						
		Adjacent Collocation - 4-Fiber Cross-Connect			CLOAC	PE1JK	3.33	37.92	35.51	18.20	15.44						
		Adjacent Collocation - Application Fee			CLOAC	PE1JB		2,763.00		1.02							
		Adjacent Collocation - 120V, Single Phase Standby Power Rate per AC Breaker Amp			CLOAC	PE1JL	5.26										
		Adjacent Collocation - 240V, Single Phase Standby Power Rate per AC Breaker Amp			CLOAC	PE1JM	10.53										
		Adjacent Collocation - 120V, Three Phase Standby Power Rate per AC Breaker Amp			CLOAC	PE1JN	15.80										
		Adjacent Collocation - 277V, Three Phase Standby Power Rate per AC Breaker Amp			CLOAC	PE1JO	36.47										
		Adjacent Collocation - Cable Support Structure per Entrance Cable			CLOAC	PE1JP	5.19										

COLLOCATION - Georgia														Att: 4 Exh: B			
CATEGORY		RATE ELEMENTS	Interim	Zone	BCS	USOC	RATES($)					Svc Order Submitted Elec per LSR	Svc Order Submitted Manually per LSR	Incremental Charge - Manual Svc Order vs. Electronic-1st	Incremental Charge - Manual Svc Order vs. Electronic-Add'l	Incremental Charge - Manual Svc Order vs. Electronic-Disc 1st	Incremental Charge - Manual Svc Order vs. Electronic-Disc Add'l
							Rec	Nonrecurring		Nonrecurring Disconnect		OSS Rates($)					
								First	Add'l	First	Add'l	SOMEC	SOMAN	SOMAN	SOMAN	SOMAN	SOMAN
PHYSICAL COLLOCATION																	
	Application																
		Physical Collocation - Initial Application Fee			CLO	PE1BA		1,284.72		0.59							
		Physical Collocation - Subsequent Application Fee			CLO	PE1CA		1,084.41		0.59							
		Physical Collocation - Co-Carrier Cross Connects/Direct Connect, Application Fee, per application			CLO	PE1DT		583.18									
		Physical Collocation Administrative Only - Application Fee			CLO	PE1BL		740.83									
		Physical Collocation - Application Cost, Simple Augment			CLO	PE1KS		594.05		1.21							
		Physical Collocation - Application Cost, Minor Augment			CLO	PE1KM		832.95		1.21							
		Physical Collocation - Application Cost, Intermediate Augment			CLO	PE1K1		1,057.00		1.21							
		Physical Collocation - Application Cost - Major Augment			CLO	PE1KJ		2,408.00		1.21							
	Space Preparation																
		Physical Collocation - Floor Space, per sq feet			CLO	PE1PJ	4.71										
		Physical Collocation - Space Enclosure, welded wire, first 50 square feet			CLO	PE1BX	144.71										
		Physical Collocation - Space enclosure, welded wire, first 100 square feet			CLO	PE1BW	167.00										
		Physical Collocation - Space enclosure, welded wire, each additional 50 square feet			CLO	PE1CW	16.38										
		Physical Collocation - Space Preparation - C.O. Modification per square ft.			CLO	PE1SK	2.10										
		Physical Collocation - Space Preparation, Common Systems Modifications-Cageless, per square foot			CLO	PE1SL	2.27										
		Physical Collocation - Space Preparation - Common Systems Modifications-Caged, per cage			CLO	PE1SM	77.24										
		Physical Collocation - Space Preparation - Firm Order Processing			CLO	PE1SJ		140.96									
		Physical Collocation - Space Availability Report, per Central Office Requested			CLO	PE1SR		248.50									
	Power																
		Physical Collocation - Power, -48V DC Power - per Fused Amp Requested			CLO	PE1PL	4.84										
		Physical Collocation - Power, 120V AC Power, Single Phase, per Breaker Amp			CLO	PE1FB	5.16										
		Physical Collocation - Power, 240V AC Power, Single Phase, per Breaker Amp			CLO	PE1FD	10.34										
		Physical Collocation - Power, 120V AC Power, Three Phase, per Breaker Amp			CLO	PE1FE	15.50										
		Physical Collocation - Power, 277V AC Power, Three Phase, per Breaker Amp			CLO	PE1FG	35.79										
		Physical Collocation - Power - DC power using a CLEC BDFB, per Used Amp			CLO	PE1PW	6.45										
		Physical Collocation - Power, -48V DC Power using a CLEC BDFB - per Fused Amp Requested			CLO	PE1PX	4.31										
		Physical Collocation-Physical Meter Reading Expense			CLO	PE1FL	5.00										
		Physical Collocation - Power - DC power, per Used Amp			CLO	PE1FN	7.24										
		Physical Collocation-Additional Meter Reading Trip Charge, per Central Office per Occurrence			CLO	PE1FM		15.00									
	Cross Connects (Cross Connects, Co-Carrier Cross Connects, and Ports)																
		Physical Collocation - 2-wire cross-connect, loop, provisioning			UEANL,UEQ, UNCNX, UEA, UCL, UAL, UHL, UDN, UNCVX	PE1P2	0.0202										
		Physical Collocation - 4-wire cross-connect, loop, provisioning			UEA, UHL, UNCVX, UNCDX, UCL, UDL	PE1P4	0.0403										
		Physical Collocation -DS1 Cross-Connect for Physical Collocation, provisioning			WDS1L, WDS1S, UXTD1, ULDD1, USLEL, UNLD1, U1TD1, UNC1X, UEPSR, UEPSB, UEPSE, UEPSP, USL, UEPEX, UEPDX	PE1P1	0.3807										

COLLOCATION - Georgia																	Att: 4 Exh: B
CATEGORY		RATE ELEMENTS	Interim	Zone	BCS	USOC	RATES($)					Svc Order Submitted Elec per LSR	Svc Order Submitted Manually per LSR	Incremental Charge - Manual Svc Order vs. Electronic-1st	Incremental Charge - Manual Svc Order vs. Electronic-Add'l	Incremental Charge - Manual Svc Order vs. Electronic-Disc 1st	Incremental Charge - Manual Svc Order vs. Electronic-Disc Add'l
							Rec	Nonrecurring		Nonrecurring Disconnect		OSS Rates($)					
								First	Add'l	First	Add'l	SOMEC	SOMAN	SOMAN	SOMAN	SOMAN	SOMAN
		Physical Collocation - DS3 Cross-Connect, provisioning			UE3, U1TD3, UXTD3, UXTS1, UNC3X, UNCSX, ULDD3, U1TS1, ULDS1, UNLD3, UEPEX, UEPDX, UEPSR, UEPSB, UEPSE, UEPSP	PE1P3	4.15										
		Physical Collocation - 2-Fiber Cross-Connect			CLO, ULDO3, ULD12, ULD48, U1TO3, U1T12, U1T48, UDLO3, UDL12, UDF	PE1F2	1.76										
		Physical Collocation - 4-Fiber Cross-Connect			ULDO3, ULD12, ULD48, U1TO3, U1T12, U1T48, UDLO3, UDL12, UDF, UDFCX	PE1F4	3.38										
		Physical Collocation - Co-Carrier Cross Connects/Direct Connect - Fiber Cable Support Structure, per linear foot, per cable.			CLO	PE1ES	0.001										
		Physical Collocation - Co-Carrier Cross Connect/Direct Connect - Copper/Coax Cable Support Structure, per linear foot, per cable.			CLO	PE1DS	0.0015										
		Physical Collocation 2-Wire Cross Connect, Port			UEPSR, UEPSP, UEPSE, UEPSB, UEPSX, UEP2C	PE1R2	0.0202										
		Physical Collocation 4-Wire Cross Connect, Port			UEPEX, UEPDD	PE1R4	0.0403										
	Security																
		Physical Collocation - Security Escort for Basic Time - normally scheduled work, per half hour			CLO	PE1BT		16.51	10.82								
		Physical Collocation - Security Escort for Overtime - outside of normally scheduled working hours on a scheduled work day, per half hour			CLO	PE1OT		21.90	14.17								
		Physical Collocation - Security Escort for Premium Time - outside of scheduled work day, per half hour			CLO	PE1PT		27.29	17.53								
		Physical Collocation - Security Access System - Security System per Central Office, per Sq. Ft.			CLO	PE1AY	0.011										
		Physical Collocation -Security Access System - New Card Activation, per Card Activation (First), per State			CLO	PE1A1		21.98									
		Physical Collocation - Security Access System - New Access Card Deactivation, per Card			CLO	PE1A4		8.72	8.72								
		Physical Collocation-Security Access System-Administrative Change, existing Access Card, per Request, per State, per Card			CLO	PE1AA		5.37									
		Physical Collocation - Security Access System - Replace Lost or Stolen Card, per Card			CLO	PE1AR		16.99									
		Physical Collocation - Security Access - Initial Key, per Key			CLO	PE1AK		13.19									
		Physical Collocation - Security Access - Key, Replace Lost or Stolen Key, per Key			CLO	PE1AL		13.19									
	CFA																
		Physical Collocation - CFA Information Resend Request, per premises, per arrangement, per request			CLO	PE1C9		77.42									
	Cable Records - Note: The rates in the First & Additional columns will actually be billed as "Initial I" and "Subsequent S" respectively																
		Physical Collocation - Cable Records, per request			CLO	PE1CR		I 742.92	S 477.59	125.63							
		Physical Collocation, Cable Records, VG/DS0 Cable, per cable record (maximum 3600 records)			CLO	PE1CD		317.29		177.60							
		Physical Collocation, Cable Records, VG/DS0 Cable, per each 100 pair			CLO	PE1CO		4.47		5.29							
		Physical Collocation, Cable Records, DS1, per T1 TIE			CLO	PE1C1		2.22		2.62							
		Physical Collocation, Cable Records, DS3, per T3 TIE			CLO	PE1C3		7.76		9.18							
		Physical Collocation - Cable Records, Fiber Cable, per cable record (maximum 99 records)			CLO	PE1CB		83.37		73.49							
		Physical Collocation, Cable Records,CAT5/RJ45			CLO	PE1C5		2.22		2.62							

COLLOCATION - Georgia																	Att: 4 Exh: B
CATEGORY		RATE ELEMENTS	Interim	Zone	BCS	USOC	RATES($)					Svc Order Submitted Elec per LSR	Svc Order Submitted Manually per LSR	Incremental Charge - Manual Svc Order vs. Electronic-1st	Incremental Charge - Manual Svc Order vs. Electronic-Add'l	Incremental Charge - Manual Svc Order vs. Electronic-Disc 1st	Incremental Charge - Manual Svc Order vs. Electronic-Disc Add'l
							Rec	Nonrecurring		Nonrecurring Disconnect		OSS Rates($)					
								First	Add'l	First	Add'l	SOMEC	SOMAN	SOMAN	SOMAN	SOMAN	SOMAN
	Virtual to Physical																
		Physical Collocation - Virtual to Physical Collocation Relocation, per Voice Grade Circuit			CLO	PE1BV		33.00									
		Physical Collocation - Virtual to Physical Collocation Relocation, per DSO Circuit			CLO	PE1BO		33.00									
		Physical Collocation - Virtual to Physical Collocation Relocation, per DS1 Circuit			CLO	PE1B1		52.00									
		Physical Collocation - Virtual to Physical Collocation Relocation, per DS3 Circuit			CLO	PE1B3		52.00									
		Physical Collocation - Virtual to Physical Collocation In-Place, Per Voice Grade Circuit			CLO	PE1BR		22.59									
		Physical Collocation Virtual to Physical Collocation In-Place, Per DSO Circuit			CLO	PE1BP		22.59									
		Physical Collocation - Virtual to Physical Collocation In-Place, Per DS1 Circuit			CLO	PE1BS		32.85									
		Physical Collocation - Virtual to Physical Collocation In-Place, per DS3 Circuit			CLO	PE1BE		32.85									
	Entrance Cable																
		Physical Collocation - Fiber Cable Installation, Pricing, non-recurring charge, per Entrance Cable			CLO	PE1BD		736.20		21.49							
		Physical Collocation - Fiber Cable Support Structure, per Entrance Cable			CLO	PE1PM	7.37										
		Physical Collocation, Entrance Cable Support Structure, Copper, per each 100 pairs or fraction thereof (CO Manhole to Collocation Space)			CLO	PE1EE	0.2686										
		Physical Collocation, Entrance Cable Installation, Copper, per Cable (CO Manhole to Collocation Space)			CLO	PE1EF		754.41		21.49							
		Physical Collocation, Entrance Cable Installation, Copper, per each 100 pairs or fraction thereof (CO Manhole to Collocation Space)			CLO	PE1EG		9.11									
		Physical Collocation - Fiber Entrance Cable Installation, per Fiber			CLO	PE1ED		3.90									
VIRTUAL COLLOCATION																	
	Application																
		Virtual Collocation - Application Fee			AMTFS	EAF		608.92		0.59							
		Virtual Collocation - Co-Carrier Cross Connects/Direct Connect, Application Fee, per application			AMTFS	VE1CA		583.18									
		Virtual Collocation Administrative Only - Application Fee			AMTFS	VE1AF		609.52									
	Space Preparation																
		Virtual Collocation - Floor Space, per sq. ft.			AMTFS	ESPVX	4.71										
	Power																
		Virtual Collocation - Power, per fused amp			AMTFS	ESPAX	4.84										
	Cross Connects (Cross Connects, Co-Carrier Cross Connects, and Ports)																
		Virtual Collocation - 2-wire cross-connect, loop, provisioning			UEANL, UEA, UDN, UAL, UHL, UCL, UEQ, UNCVX, UNCDX, UNCNX	UEAC2	0.0192										
		Virtual Collocation - 4-wire cross-connect, loop, provisioning			UEA, UHL, UCL, UDL, UNCVX, UNCDX	UEAC4	0.0385										
		Virtual collocation - Special Access & UNE, cross-connect per DS1			ULR, UXTD1, UNC1X, ULDD1, U1TD1, USLEL, UNLD1, USL, UEPEX, UEPDX	CNC1X	0.3807										
		Virtual collocation - Special Access & UNE, cross-connect per DS3			USL, UE3, U1TD3, UXTS1, UXTD3, UNC3X, UNCSX, ULDD3, U1TS1, ULDS1, UDLSX, UNLD3, XDEST	CND3X	4.15										

COLLOCATION - Georgia																	Att: 4 Exh: B
CATEGORY		RATE ELEMENTS	Interim	Zone	BCS	USOC	RATES($)					Svc Order Submitted Elec per LSR	Svc Order Submitted Manually per LSR	Incremental Charge - Manual Svc Order vs. Electronic-1st	Incremental Charge - Manual Svc Order vs. Electronic-Add'l	Incremental Charge - Manual Svc Order vs. Electronic-Disc 1st	Incremental Charge - Manual Svc Order vs. Electronic-Disc Add'l
							Rec	Nonrecurring		Nonrecurring Disconnect		OSS Rates($)					
								First	Add'l	First	Add'l	SOMEC	SOMAN	SOMAN	SOMAN	SOMAN	SOMAN
		Virtual Collocation - 2-Fiber Cross Connects			UDL12, UDLO3, U1T48, U1T12, U1TO3, ULDO3, ULD12, ULD48, UDF	CNC2F	1.76										
		Virtual Collocation - 4-Fiber Cross Connects			UDL12, UDLO3, U1T48, U1T12, U1TO3, ULDO3, ULD12, ULD48, UDF	CNC4F	3.53										
		Virtual Collocation - Co-Carrier Cross Connects/Direct Connect - Fiber Cable Support Structure, per linear foot, per cable			AMTFS	VE1CB	0.001										
		Virtual Collocation - Co-Carrier Cross Connects/Direct Connect - Copper/Coax Cable Support Structure, per linear foot, per cable			AMTFS	VE1CD	0.0015										
		Virtual Collocation 2-Wire Cross Connect, Port			UEPSX, UEPSB, UEPSE, UEPSP, UEPSR, UEP2C	VE1R2	0.0192										
		Virtual Collocation 4-Wire Cross Connect, Port			UEPDD, UEPEX	VE1R4	0.0385										
	CFA																
		Virtual Collocation - CFA Information Resend Request, per Premises, per Arrangement, per request			AMTFS	VE1QR		77.42									
	Cable Records - Note: The rates in the First & Additional columns will actually be billed as "Initial I" & "Subsequent S" respectively																
		Virtual Collocation Cable Records - per request			AMTFS	VE1BA		I 742.92	S 477.59	125.63							
		Virtual Collocation Cable Records - VG/DS0 Cable, per cable record			AMTFS	VE1BB		317.29		177.60							
		Virtual Collocation Cable Records - VG/DS0 Cable, per each 100 pair			AMTFS	VE1BC		4.47		5.29							
		Virtual Collocation Cable Records - DS1, per T1TIE			AMTFS	VE1BD		2.22		2.62							
		Virtual Collocation Cable Records - DS3, per T3TIE			AMTFS	VE1BE		7.76		9.18							
		Virtual Collocation Cable Records - Fiber Cable, per 99 fiber records			AMTFS	VE1BF		83.37		73.49							
		Virtual Collocation Cable Records - CAT 5/RJ45			AMTFS	VE1B5		2.22		2.62							
	Security																
		Virtual collocation - Security escort, basic time, normally scheduled work hours			AMTFS	SPTBX		16.51	10.82								
		Virtual collocation - Security escort, overtime, outside of normally scheduled work hours on a normal working day			AMTFS	SPTOX		21.90	14.17								
		Virtual collocation - Security escort, premium time, outside of a scheduled work day			AMTFS	SPTPX		27.29	17.53								
	Maintenance																
		Virtual collocation - Maintenance in CO - Basic, per half hour			AMTFS	CTRLX		26.52	10.82								
		Virtual collocation - Maintenance in CO - Overtime, per half hour			AMTFS	SPTOM		35.41	14.17								
		Virtual collocation - Maintenance in CO - Premium per half hour			AMTFS	SPTPM		44.30	17.53								
	Entrance Cable																
		Virtual Collocation - Cable Installation Charge, per cable			AMTFS	ESPCX		736.20		21.49							
		Virtual Collocation - Cable Support Structure, per cable			AMTFS	ESPSX	7.74										
		Virtual Collocation, Entrance Cable Support Structure, Copper, per each 100 pairs or fraction thereof (CO Manhole to Frame)			AMTFS	VE1EE	0.235										
		Virtual Collocation, Entrance Cable Installation, Copper, per Cable (CO Manhole to Frame)			AMTFS	VE1EF		754.41		21.49							
		Virtual Collocation, Entrance Cable Installation, Copper, per each 100 pairs or fraction thereof (CO Manhole to Frame)			AMTFS	VE1EG		9.11									
COLLOCATION IN THE REMOTE SITE																	
	Physical Remote Site Collocation																
		Physical Collocation in the Remote Site - Application Fee			CLORS	PE1RA		300.31		132.49							
		Cabinet Space in the Remote Site per Bay/ Rack			CLORS	PE1RB	148.11										
		Physical Collocation in the Remote Site - Security Access - Key			CLORS	PE1RD		13.19									

COLLOCATION - Georgia																	Att: 4 Exh: B
CATEGORY		RATE ELEMENTS	Interim	Zone	BCS	USOC	RATES($)					Svc Order Submitted Elec per LSR	Svc Order Submitted Manually per LSR	Incremental Charge - Manual Svc Order vs. Electronic-1st	Incremental Charge - Manual Svc Order vs. Electronic-Add'l	Incremental Charge - Manual Svc Order vs. Electronic-Disc 1st	Incremental Charge - Manual Svc Order vs. Electronic-Disc Add'l
							Rec	Nonrecurring		Nonrecurring Disconnect		OSS Rates($)					
								First	Add'l	First	Add'l	SOMEC	SOMAN	SOMAN	SOMAN	SOMAN	SOMAN
		Physical Collocation in the Remote Site - Space Availability Report per Premises Requested			CLORS	PE1SR		109.83									
		Physical Collocation in the Remote Site - Remote Site CLLI Code Request, per CLLI Code Requested			CLORS	PE1RE		36.00									
		Remote Site DLEC Data (BRSDD), per Compact Disk, per CO			CLORS	PE1RR		116.71									
		Physical Collocation - Security Escort for Basic Time - normally scheduled work, per half hour			CLORS	PE1BT		16.51	10.82								
		Physical Collocation - Security Escort for Overtime - outside of normally scheduled working hours on a scheduled work day, per half hour			CLORS	PE1OT		21.90	14.17								
		Physical Collocation - Security Escort for Premium Time - outside of scheduled work day, per half hour			CLORS	PE1PT		27.29	17.53								
	Adjacent Remote Site Collocation																
		Remote Site-Adjacent Collocation-Application Fee			CLORS	PE1RU		755.62	755.62								
		Remote Site-Adjacent Collocation - Real Estate, per square foot			CLORS	PE1RT	0.134										
		Remote Site-Adjacent Collocation - AC Power, per breaker amp			CLORS	PE1RS	6.27										
	NOTE: If Security Escort and/or Add'l Engineering Fees become necessary for adjacent remote site collocation, the Parties will negotiate appropriate rates.																
	Virtual Remote Site Collocation																
		Virtual Collocation in the Remote Site - Application Fee			VE1RS	VE1RB		300.31		132.49							
		Virtual Collocation in the Remote Site - Per Bay/Rack of Space			VE1RS	VE1RC	148.11										
		Virtual Collocation in the Remote Site - Space Availability Report per Premises requested			VE1RS	VE1RR		109.83									
		Virtual Collocation in the Remote Site - Remote Site CLLI Code Request, per CLLI Code Requested			VE1RS	VE1RL		36.00									
ADJACENT COLLOCATION																	
		Adjacent Collocation - Space Charge per Sq. Ft.			CLOAC	PE1JA	0.1725										
		Adjacent Collocation - Electrical Facility Charge per Linear Ft.			CLOAC	PE1JC	4.12										
		Adjacent Collocation - 2-Wire Cross-Connects			UEANL,UEQ,UEA,UCL, UAL, UHL, UDN	PE1JE	0.0176										
		Adjacent Collocation - 4-Wire Cross-Connects			UEA,UHL,UDL,UCL	PE1JF	0.0353										
		Adjacent Collocation - DS1 Cross-Connects			USL	PE1JG	0.3686										
		Adjacent Collocation - DS3 Cross-Connects			UE3	PE1JH	4.83										
		Adjacent Collocation - 2-Fiber Cross-Connect			CLOAC	PE1JJ	1.69										
		Adjacent Collocation - 4-Fiber Cross-Connect			CLOAC	PE1JK	3.31										
		Adjacent Collocation - Application Fee			CLOAC	PE1JB		1,380.83		0.50							
		Adjacent Collocation - 120V, Single Phase Standby Power Rate per AC Breaker Amp			CLOAC	PE1JL	5.16										
		Adjacent Collocation - 240V, Single Phase Standby Power Rate per AC Breaker Amp			CLOAC	PE1JM	10.34										
		Adjacent Collocation - 120V, Three Phase Standby Power Rate per AC Breaker Amp			CLOAC	PE1JN	15.50										
		Adjacent Collocation - 277V, Three Phase Standby Power Rate per AC Breaker Amp			CLOAC	PE1JO	35.79										
		Adjacent Collocation - 240V, Three Phase Standby Power Rate per AC Breaker Amp			CLOAC	PE1JD	35.79										

COLLOCATION - Kentucky														Att: 4 Exh: B			
CATEGORY		RATE ELEMENTS	Interim	Zone	BCS	USOC	RATES($)					Svc Order Submitted Elec per LSR	Svc Order Submitted Manually per LSR	Incremental Charge - Manual Svc Order vs. Electronic-1st	Incremental Charge - Manual Svc Order vs. Electronic-Add'l	Incremental Charge - Manual Svc Order vs. Electronic-Disc 1st	Incremental Charge - Manual Svc Order vs. Electronic-Disc Add'l
							Rec	Nonrecurring		Nonrecurring Disconnect		OSS Rates($)					
								First	Add'l	First	Add'l	SOMEC	SOMAN	SOMAN	SOMAN	SOMAN	SOMAN
PHYSICAL COLLOCATION																	
	Application																
		Physical Collocation - Initial Application Fee			CLO	PE1BA		3,773.54		1.01							
		Physical Collocation - Subsequent Application Fee			CLO	PE1CA		3,145.35		1.01							
		Physical Collocation - Co-Carrier Cross Connects/Direct Connect, Application Fee, per application			CLO	PE1DT		584.20									
		Physical Collocation Administrative Only - Application Fee			CLO	PE1BL		742.12									
		Physical Collocation - Application Cost, Simple Augment			CLO	PE1KS		594.98		1.21							
		Physical Collocation - Application Cost, Minor Augment			CLO	PE1KM		834.26		1.21							
		Physical Collocation - Application Cost, Intermediate Augment			CLO	PE1K1		1,059.00		1.21							
		Physical Collocation - Application Cost - Major Augment			CLO	PE1KJ		2,412.00		1.21							
	Space Preparation																
		Physical Collocation - Floor Space, per sq feet			CLO	PE1PJ	7.99										
		Physical Collocation - Space Enclosure, welded wire, first 50 square feet			CLO	PE1BX	166.83										
		Physical Collocation - Space enclosure, welded wire, first 100 square feet			CLO	PE1BW	184.97										
		Physical Collocation - Space enclosure, welded wire, each additional 50 square feet			CLO	PE1CW	18.14										
		Physical Collocation - Space Preparation - C.O. Modification per square ft.			CLO	PE1SK	2.32										
		Physical Collocation - Space Preparation, Common Systems Modifications-Cageless, per square foot			CLO	PE1SL	3.26										
		Physical Collocation - Space Preparation - Common Systems Modifications-Caged, per cage			CLO	PE1SM	110.57										
		Physical Collocation - Space Preparation - Firm Order Processing			CLO	PE1SJ		1,206.07									
		Physical Collocation - Space Availability Report, per Central Office Requested			CLO	PE1SR		2,158.67									
	Power																
		Physical Collocation - Power, -48V DC Power - per Fused Amp Requested			CLO	PE1PL	8.06										
		Physical Collocation - Power, 120V AC Power, Single Phase, per Breaker Amp			CLO	PE1FB	5.44										
		Physical Collocation - Power, 240V AC Power, Single Phase, per Breaker Amp			CLO	PE1FD	10.88										
		Physical Collocation - Power, 120V AC Power, Three Phase, per Breaker Amp			CLO	PE1FE	16.32										
		Physical Collocation - Power, 277V AC Power, Three Phase, per Breaker Amp			CLO	PE1FG	37.68										
	Cross Connects (Cross Connects, Co-Carrier Cross Connects, and Ports)																
		Physical Collocation - 2-wire cross-connect, loop, provisioning			UEANL,UEQ, UNCNX, UEA, UCL, UAL, UHL, UDN, UNCVX	PE1P2	0.0333	24.68	23.68	12.14	10.95						
		Physical Collocation - 4-wire cross-connect, loop, provisioning			UEA, UHL, UNCVX, UNCDX, UCL, UDL	PE1P4	0.0665	24.88	23.82	12.77	11.46						
		Physical Collocation -DS1 Cross-Connect for Physical Collocation, provisioning			WDS1L, WDS1S, UXTD1, ULDD1, USLEL, UNLD1, U1TD1, UNC1X, UEPSR, UEPSB, UEPSE, UEPSP, USL, UEPEX, UEPDX	PE1P1	1.48	44.23	31.98	12.81	11.57						
		Physical Collocation - DS3 Cross-Connect, provisioning			UE3, U1TD3, UXTD3, UXTS1, UNC3X, UNCSX, ULDD3, U1TS1, ULDS1, UNLD3, UEPEX, UEPDX, UEPSR, UEPSB, UEPSE, UEPSP	PE1P3	18.89	41.93	30.51	14.75	11.83						

COLLOCATION - Kentucky

Att: 4 Exh: B

CATEGORY	RATE ELEMENTS	Interim	Zone	BCS	USOC	RATES($) Rec	Nonrecurring First	Nonrecurring Add'l	Nonrecurring Disconnect First	Nonrecurring Disconnect Add'l	Svc Order Submitted Elec per LSR	Svc Order Submitted Manually per LSR	Incremental Charge - Manual Svc Order vs. Electronic- 1st	Incremental Charge - Manual Svc Order vs. Electronic- Add'l	Incremental Charge - Manual Svc Order vs. Electronic- Disc 1st	Incremental Charge - Manual Svc Order vs. Electronic- Disc Add'l
											OSS Rates($)					
											SOMEC	SOMAN	SOMAN	SOMAN	SOMAN	SOMAN
	Physical Collocation - 2-Fiber Cross-Connect			CLO, ULDO3, ULD12, ULD48, U1TO3, U1T12, U1T48, UDLO3, UDL12, UDF	PE1F2	3.75	41.93	30.51	14.76	11.84						
	Physical Collocation - 4-Fiber Cross-Connect			ULDO3, ULD12, ULD48, U1TO3, U1T12, U1T48, UDLO3, UDL12, UDF, UDFCX	PE1F4	6.65	51.29	39.87	19.41	16.49						
	Physical Collocation - Co-Carrier Cross Connects/Direct Connect - Fiber Cable Support Structure, per linear foot, per cable.			CLO	PE1ES	0.0012										
	Physical Collocation - Co-Carrier Cross Connect/Direct Connect - Copper/Coax Cable Support Structure, per linear foot, per cable.			CLO	PE1DS	0.0018										
	Physical Collocation 2-Wire Cross Connect, Port			UEPSR, UEPSP, UEPSE, UEPSB, UEPSX, UEP2C	PE1R2	0.0333	24.68	23.68	12.14	10.95						
	Physical Collocation 4-Wire Cross Connect, Port			UEPEX, UEPDD	PE1R4	0.0665	24.88	23.82	12.77	11.46						
Security																
	Physical Collocation - Security Escort for Basic Time - normally scheduled work, per half hour			CLO	PE1BT		33.98	21.53								
	Physical Collocation - Security Escort for Overtime - outside of normally scheduled working hours on a scheduled work day, per half hour			CLO	PE1OT		44.26	27.81								
	Physical Collocation - Security Escort for Premium Time - outside of scheduled work day, per half hour			CLO	PE1PT		54.54	34.09								
	Physical Collocation - Security Access System, Security System, per Central Office			CLO	PE1AX	76.10										
	Physical Collocation -Security Access System - New Card Activation, per Card Activation (First), per State			CLO	PE1A1	0.058	55.79									
	Physical Collocation-Security Access System-Administrative Change, existing Access Card, per Request, per State, per Card			CLO	PE1AA		15.64									
	Physical Collocation - Security Access System - Replace Lost or Stolen Card, per Card			CLO	PE1AR		45.74									
	Physical Collocation - Security Access - Initial Key, per Key			CLO	PE1AK		26.29									
	Physical Collocation - Security Access - Key, Replace Lost or Stolen Key, per Key			CLO	PE1AL		26.29									
CFA																
	Physical Collocation - CFA Information Resend Request, per premises, per arrangement, per request			CLO	PE1C9		77.55									
Cable Records - Note: The rates in the First & Additional columns will actually be billed as "Initial I" and "Subsequent S" respectively																
	Physical Collocation - Cable Records, per request			CLO	PE1CR		I 1524.45	S 980.01	267.02							
	Physical Collocation, Cable Records, VG/DS0 Cable, per cable record (maximum 3600 records)			CLO	PE1CD		656.37		379.70							
	Physical Collocation, Cable Records, VG/DS0 Cable, per each 100 pair			CLO	PE1CO		9.65		11.84							
	Physical Collocation, Cable Records, DS1, per T1 TIE			CLO	PE1C1		4.52		5.54							
	Physical Collocation, Cable Records, DS3, per T3 TIE			CLO	PE1C3		15.81		19.39							
	Physical Collocation - Cable Records, Fiber Cable, per cable record (maximum 99 records)			CLO	PE1CB		169.63		154.85							
	Physical Collocation, Cable Records,CAT5/RJ45			CLO	PE1C5		4.52		5.54							
Virtual to Physical																
	Physical Collocation - Virtual to Physical Collocation Relocation, per Voice Grade Circuit			CLO	PE1BV		33.00									
	Physical Collocation - Virtual to Physical Collocation Relocation, per DSO Circuit			CLO	PE1BO		33.00									
	Physical Collocation - Virtual to Physical Collocation Relocation, per DS1 Circuit			CLO	PE1B1		52.00									
	Physical Collocation - Virtual to Physical Collocation Relocation, per DS3 Circuit			CLO	PE1B3		52.00									

COLLOCATION - Kentucky

Att: 4 Exh: B

CATEGORY	RATE ELEMENTS	Interim	Zone	BCS	USOC	RATES($) Rec	Nonrecurring First	Nonrecurring Add'l	Nonrecurring Disconnect First	Nonrecurring Disconnect Add'l	Svc Order Submitted Elec per LSR	Svc Order Submitted Manually per LSR	Incremental Charge - Manual Svc Order vs. Electronic- 1st	Incremental Charge - Manual Svc Order vs. Electronic- Add'l	Incremental Charge - Manual Svc Order vs. Electronic- Disc 1st	Incremental Charge - Manual Svc Order vs. Electronic- Disc Add'l
											OSS Rates($)					
							First	Add'l	First	Add'l	SOMEC	SOMAN	SOMAN	SOMAN	SOMAN	SOMAN
	Physical Collocation - Virtual to Physical Collocation In-Place, Per Voice Grade Circuit			CLO	PE1BR		22.49									
	Physical Collocation Virtual to Physical Collocation In-Place, Per DSO Circuit			CLO	PE1BP		22.49									
	Physical Collocation - Virtual to Physical Collocation In-Place, Per DS1 Circuit			CLO	PE1BS		32.71									
	Physical Collocation - Virtual to Physical Collocation In-Place, per DS3 Circuit			CLO	PE1BE		32.71									
Entrance Cable																
	Physical Collocation - Fiber Cable Installation, Pricing, non-recurring charge, per Entrance Cable			CLO	PE1BD		1,729.11		45.16							
	Physical Collocation - Fiber Cable Support Structure, per Entrance Cable			CLO	PE1PM	19.86										
	Physical Collocation - Fiber Entrance Cable Installation, per Fiber			CLO	PE1ED		7.75									
VIRTUAL COLLOCATION																
Application																
	Virtual Collocation - Application Fee			AMTFS	EAF		2,419.86		1.01							
	Virtual Collocation - Co-Carrier Cross Connects/Direct Connect, Application Fee, per application			AMTFS	VE1CA		584.20									
	Virtual Collocation Administrative Only - Application Fee			AMTFS	VE1AF		742.12									
Space Preparation																
	Virtual Collocation - Floor Space, per sq. ft.			AMTFS	ESPVX	7.99										
Power																
	Virtual Collocation - Power, per fused amp			AMTFS	ESPAX	8.06										
Cross Connects (Cross Connects, Co-Carrier Cross Connects, and Ports)																
	Virtual Collocation - 2-wire cross-connect, loop, provisioning			UEANL, UEA, UDN, UAL, UHL, UCL, UEQ, UNCVX, UNCDX, UNCNX	UEAC2	0.0309	24.68	23.68	12.14	10.95						
	Virtual Collocation - 4-wire cross-connect, loop, provisioning			UEA, UHL, UCL, UDL, UNCVX, UNCDX	UEAC4	0.0619	24.88	23.82	12.77	11.46						
	Virtual collocation - Special Access & UNE, cross-connect per DS1			ULR, UXTD1, UNC1X, ULDD1, U1TD1, USLEL, UNLD1, USL, UEPEX, UEPDX	CNC1X	1.48	44.23	31.98	12.81	11.57						
	Virtual collocation - Special Access & UNE, cross-connect per DS3			USL, UE3, U1TD3, UXTS1, UXTD3, UNC3X, UNCSX, ULDD3, U1TS1, ULDS1, UDLSX, UNLD3, XDEST	CND3X	18.89	41.93	30.51	14.75	11.83						
	Virtual Collocation - 2-Fiber Cross Connects			UDL12, UDLO3, U1T48, U1T12, U1TO3, ULDO3, ULD12, ULD48, UDF	CNC2F	3.80	41.94	30.51	14.76	11.84						
	Virtual Collocation - 4-Fiber Cross Connects			UDL12, UDLO3, U1T48, U1T12, U1TO3, ULDO3, ULD12, ULD48, UDF	CNC4F	7.59	51.29	39.87	19.41	16.49						
	Virtual Collocation - Co-Carrier Cross Connects/Direct Connect - Fiber Cable Support Structure, per linear foot, per cable			AMTFS	VE1CB	0.0012										
	Virtual Collocation - Co-Carrier Cross Connects/Direct Connect - Copper/Coax Cable Support Structure, per linear foot, per cable			AMTFS	VE1CD	0.0018										
	Virtual Collocation 2-Wire Cross Connect, Port			UEPSX, UEPSB, UEPSE, UEPSP, UEPSR, UEP2C	VE1R2	0.0309	24.68	23.68	12.14	10.95						
	Virtual Collocation 4-Wire Cross Connect, Port			UEPDD, UEPEX	VE1R4	0.0619	24.88	23.82	12.77	11.46						

COLLOCATION - Kentucky														Att: 4 Exh: B			
CATEGORY		RATE ELEMENTS	Interim	Zone	BCS	USOC	RATES($)					Svc Order Submitted Elec per LSR	Svc Order Submitted Manually per LSR	Incremental Charge - Manual Svc Order vs. Electronic-1st	Incremental Charge - Manual Svc Order vs. Electronic-Add'l	Incremental Charge - Manual Svc Order vs. Electronic-Disc 1st	Incremental Charge - Manual Svc Order vs. Electronic-Disc Add'l
							Rec	Nonrecurring		Nonrecurring Disconnect		OSS Rates($)					
								First	Add'l	First	Add'l	SOMEC	SOMAN	SOMAN	SOMAN	SOMAN	SOMAN
	CFA																
		Virtual Collocation - CFA Information Resend Request, per Premises, per Arrangement, per request			AMTFS	VE1QR		77.55									
	Cable Records - Note: The rates in the First & Additional columns will actually be billed as "Initial I" & "Subsequent S" respectively																
		Virtual Collocation Cable Records - per request			AMTFS	VE1BA		I 1524.45	S 980.01	267.02							
		Virtual Collocation Cable Records - VG/DS0 Cable, per cable record			AMTFS	VE1BB		656.37		379.70							
		Virtual Collocation Cable Records - VG/DS0 Cable, per each 100 pair			AMTFS	VE1BC		9.65		11.84							
		Virtual Collocation Cable Records -DS1, per T1TIE			AMTFS	VE1BD		4.52		5.54							
		Virtual Collocation Cable Records - DS3, per T3TIE			AMTFS	VE1BE		15.81		19.39							
		Virtual Collocation Cable Records - Fiber Cable, per 99 fiber records			AMTFS	VE1BF		169.63		154.85							
		Virtual Collocation Cable Records - CAT 5/RJ45			AMTFS	VE1B5		4.52		5.54							
	Security																
		Virtual collocation - Security escort, basic time, normally scheduled work hours			AMTFS	SPTBX		33.98	21.53								
		Virtual collocation - Security escort, overtime, outside of normally scheduled work hours on a normal working day			AMTFS	SPTOX		44.26	27.81								
		Virtual collocation - Security escort, premium time, outside of a scheduled work day			AMTFS	SPTPX		54.54	34.09								
	Maintenance																
		Virtual collocation - Maintenance in CO - Basic, per half hour			AMTFS	CTRLX		56.07	21.53								
		Virtual collocation - Maintenance in CO - Overtime, per half hour			AMTFS	SPTOM		73.23	27.81								
		Virtual collocation - Maintenance in CO - Premium per half hour			AMTFS	SPTPM		90.39	34.09								
	Entrance Cable																
		Virtual Collocation - Cable Installation Charge, per cable			AMTFS	ESPCX		1,729.11		45.16							
		Virtual Collocation - Cable Support Structure, per cable			AMTFS	ESPSX	17.38										
COLLOCATION IN THE REMOTE SITE																	
	Physical Remote Site Collocation																
		Physical Collocation in the Remote Site - Application Fee			CLORS	PE1RA		617.78		338.89							
		Cabinet Space in the Remote Site per Bay/ Rack			CLORS	PE1RB	219.67										
		Physical Collocation in the Remote Site - Security Access - Key			CLORS	PE1RD		26.29									
		Physical Collocation in the Remote Site - Space Availability Report per Premises Requested			CLORS	PE1SR		232.64									
		Physical Collocation in the Remote Site - Remote Site CLLI Code Request, per CLLI Code Requested			CLORS	PE1RE		75.40									
		Remote Site DLEC Data (BRSDD), per Compact Disk, per CO			CLORS	PE1RR		233.42									
		Physical Collocation - Security Escort for Basic Time - normally scheduled work, per half hour			CLORS	PE1BT		33.98	21.53								
		Physical Collocation - Security Escort for Overtime - outside of normally scheduled working hours on a scheduled work day, per half hour			CLORS	PE1OT		44.26	27.81								
		Physical Collocation - Security Escort for Premium Time - outside of scheduled work day, per half hour			CLORS	PE1PT		54.54	34.09								
	Adjacent Remote Site Collocation																
		Remote Site-Adjacent Collocation-Application Fee			CLORS	PE1RU		755.62	755.62								
		Remote Site-Adjacent Collocation - Real Estate, per square foot			CLORS	PE1RT	0.134										
		Remote Site-Adjacent Collocation - AC Power, per breaker amp			CLORS	PE1RS	6.27										
	NOTE: If Security Escort and/or Add'l Engineering Fees become necessary for adjacent remote site collocation, the Parties will negotiate appropriate rates.																
	Virtual Remote Site Collocation																
		Virtual Collocation in the Remote Site - Application Fee			VE1RS	VE1RB		617.78		338.89							
		Virtual Collocation in the Remote Site - Per Bay/Rack of Space			VE1RS	VE1RC	219.67										
		Virtual Collocation in the Remote Site - Space Availability Report per Premises requested			VE1RS	VE1RR		232.64									
		Virtual Collocation in the Remote Site - Remote Site CLLI Code Request, per CLLI Code Requested			VE1RS	VE1RL		75.40									
ADJACENT COLLOCATION																	

COLLOCATION - Kentucky																	Att: 4 Exh: B
CATEGORY		RATE ELEMENTS	Interim	Zone	BCS	USOC	RATES($)					Svc Order Submitted Elec per LSR	Svc Order Submitted Manually per LSR	Incremental Charge - Manual Svc Order vs. Electronic-1st	Incremental Charge - Manual Svc Order vs. Electronic-Add'l	Incremental Charge - Manual Svc Order vs. Electronic-Disc 1st	Incremental Charge - Manual Svc Order vs. Electronic-Disc Add'l
							Rec	Nonrecurring		Nonrecurring Disconnect		OSS Rates($)					
								First	Add'l	First	Add'l	SOMEC	SOMAN	SOMAN	SOMAN	SOMAN	SOMAN
		Adjacent Collocation - Space Charge per Sq. Ft.			CLOAC	PE1JA	0.0173										
		Adjacent Collocation - Electrical Facility Charge per Linear Ft.			CLOAC	PE1JC	5.35										
		Adjacent Collocation - 2-Wire Cross-Connects			UEANL,UEQ,UEA,UCL, UAL, UHL, UDN	PE1JE	0.0258	24.68	23.68	12.14	10.95						
		Adjacent Collocation - 4-Wire Cross-Connects			UEA,UHL,UDL,UCL	PE1JF	0.0515	24.88	23.82	12.77	11.46						
		Adjacent Collocation - DS1 Cross-Connects			USL	PE1JG	1.37	44.23	31.98	12.81	11.57						
		Adjacent Collocation - DS3 Cross-Connects			UE3	PE1JH	18.61	41.93	30.51	14.75	11.83						
		Adjacent Collocation - 2-Fiber Cross-Connect			CLOAC	PE1JJ	3.15	41.93	30.51	14.76	11.84						
		Adjacent Collocation - 4-Fiber Cross-Connect			CLOAC	PE1JK	6.02	51.29	39.87	19.41	16.49						
		Adjacent Collocation - Application Fee			CLOAC	PE1JB		3,165.50									
		Adjacent Collocation - 120V, Single Phase Standby Power Rate per AC Breaker Amp			CLOAC	PE1JL	5.44										
		Adjacent Collocation - 240V, Single Phase Standby Power Rate per AC Breaker Amp			CLOAC	PE1JM	10.88										
		Adjacent Collocation - 120V, Three Phase Standby Power Rate per AC Breaker Amp			CLOAC	PE1JN	16.32										
		Adjacent Collocation - 277V, Three Phase Standby Power Rate per AC Breaker Amp			CLOAC	PE1JO	37.68										

COLLOCATION - Louisiana														Att: 4 Exh: B			
CATEGORY		RATE ELEMENTS	Interim	Zone	BCS	USOC	RATES($)					Svc Order Submitted Elec per LSR	Svc Order Submitted Manually per LSR	Incremental Charge - Manual Svc Order vs. Electronic-1st	Incremental Charge - Manual Svc Order vs. Electronic-Add'l	Incremental Charge - Manual Svc Order vs. Electronic-Disc 1st	Incremental Charge - Manual Svc Order vs. Electronic-Disc Add'l
							Rec	Nonrecurring		Nonrecurring Disconnect		OSS Rates($)					
								First	Add'l	First	Add'l	SOMEC	SOMAN	SOMAN	SOMAN	SOMAN	SOMAN
PHYSICAL COLLOCATION																	
	Application																
		Physical Collocation - Initial Application Fee			CLO	PE1BA		1,837.24									
		Physical Collocation - Subsequent Application Fee			CLO	PE1CA		1,533.41									
		Physical Collocation - Co-Carrier Cross Connects/Direct Connect, Application Fee, per application			CLO	PE1DT		583.30									
		Physical Collocation Administrative Only - Application Fee			CLO	PE1BL		741.97									
		Physical Collocation - Application Cost, Simple Augment			CLO	PE1KS		596.35		1.22							
		Physical Collocation - Application Cost, Minor Augment			CLO	PE1KM		836.18		1.22							
		Physical Collocation - Application Cost, Intermediate Augment			CLO	PE1K1		1,061.00		1.22							
		Physical Collocation - Application Cost - Major Augment			CLO	PE1KJ		2,418.00		1.22							
	Space Preparation																
		Physical Collocation - Floor Space, per sq feet			CLO	PE1PJ	5.30										
		Physical Collocation - Space Enclosure, welded wire, first 50 square feet			CLO	PE1BX	166.40										
		Physical Collocation - Space enclosure, welded wire, first 100 square feet			CLO	PE1BW	184.50										
		Physical Collocation - Space enclosure, welded wire, each additional 50 square feet			CLO	PE1CW	18.10										
		Physical Collocation - Space Preparation - C.O. Modification per square ft.			CLO	PE1SK	2.31										
		Physical Collocation - Space Preparation, Common Systems Modifications-Cageless, per square foot			CLO	PE1SL	2.70										
		Physical Collocation - Space Preparation - Common Systems Modifications-Caged, per cage			CLO	PE1SM	91.60										
		Physical Collocation - Space Preparation - Firm Order Processing			CLO	PE1SJ		583.33									
		Physical Collocation - Space Availability Report, per Central Office Requested			CLO	PE1SR		1,044.07									
	Power																
		Physical Collocation - Power, -48V DC Power - per Fused Amp Requested			CLO	PE1PL	8.32										
		Physical Collocation - Power, 120V AC Power, Single Phase, per Breaker Amp			CLO	PE1FB	5.45										
		Physical Collocation - Power, 240V AC Power, Single Phase, per Breaker Amp			CLO	PE1FD	10.92										
		Physical Collocation - Power, 120V AC Power, Three Phase, per Breaker Amp			CLO	PE1FE	16.37										
		Physical Collocation - Power, 277V AC Power, Three Phase, per Breaker Amp			CLO	PE1FG	37.80										
	Cross Connects (Cross Connects, Co-Carrier Cross Connects, and Ports)																
		Physical Collocation - 2-wire cross-connect, loop, provisioning			UEANL,UEQ, UNCNX, UEA, UCL, UAL, UHL, UDN, UNCVX	PE1P2	0.0318	11.94	11.46								
		Physical Collocation - 4-wire cross-connect, loop, provisioning			UEA, UHL, UNCVX, UNCDX, UCL, UDL	PE1P4	0.0636	12.04	11.53								
		Physical Collocation -DS1 Cross-Connect for Physical Collocation, provisioning			WDS1L, WDS1S, UXTD1, ULDD1, USLEL, UNLD1, U1TD1, UNC1X, UEPSR, UEPSB, UEPSE, UEPSP, USL, UEPEX, UEPDX	PE1P1	1.04	21.39	15.47								
		Physical Collocation - DS3 Cross-Connect, provisioning			UE3, U1TD3, UXTD3, UXTS1, UNC3X, UNCSX, ULDD3, U1TS1, ULDS1, UNLD3, UEPEX, UEPDX, UEPSR, UEPSB, UEPSE, UEPSP	PE1P3	13.21	20.28	14.76								

COLLOCATION - Louisiana

Att: 4 Exh: B

CATEGORY	RATE ELEMENTS	Interim	Zone	BCS	USOC	RATES($) Rec	Nonrecurring First	Nonrecurring Add'l	Nonrecurring Disconnect First	Nonrecurring Disconnect Add'l	Svc Order Submitted Elec per LSR	Svc Order Submitted Manually per LSR	Incremental Charge - Manual Svc Order vs. Electronic-1st	Incremental Charge - Manual Svc Order vs. Electronic-Add'l	Incremental Charge - Manual Svc Order vs. Electronic-Disc 1st	Incremental Charge - Manual Svc Order vs. Electronic-Disc Add'l
											OSS Rates($)					
							First	Add'l	First	Add'l	SOMEC	SOMAN	SOMAN	SOMAN	SOMAN	SOMAN
	Physical Collocation - 2-Fiber Cross-Connect			CLO, ULDO3, ULD12, ULD48, U1TO3, U1T12, U1T48, UDLO3, UDL12, UDF	PE1F2	2.62	20.28	14.76								
	Physical Collocation - 4-Fiber Cross-Connect			ULDO3, ULD12, ULD48, U1TO3, U1T12, U1T48, UDLO3, UDL12, UDF, UDFCX	PE1F4	4.65	24.81	19.29								
	Physical Collocation - Co-Carrier Cross Connects/Direct Connect - Fiber Cable Support Structure, per linear foot, per cable.			CLO	PE1ES	0.001										
	Physical Collocation - Co-Carrier Cross Connect/Direct Connect - Copper/Coax Cable Support Structure, per linear foot, per cable.			CLO	PE1DS	0.0015										
	Physical Collocation 2-Wire Cross Connect, Port			UEPSR, UEPSP, UEPSE, UEPSB, UEPSX, UEP2C	PE1R2	0.0318	11.94	11.46								
	Physical Collocation 4-Wire Cross Connect, Port			UEPEX, UEPDD	PE1R4	0.0636	12.04	11.53								
Security																
	Physical Collocation - Security Escort for Basic Time - normally scheduled work, per half hour			CLO	PE1BT		16.44	10.42								
	Physical Collocation - Security Escort for Overtime - outside of normally scheduled working hours on a scheduled work day, per half hour			CLO	PE1OT		21.41	13.45								
	Physical Collocation - Security Escort for Premium Time - outside of scheduled work day, per half hour			CLO	PE1PT		26.38	16.49								
	Physical Collocation - Security Access System - Security System per Central Office, per Sq. Ft.			CLO	PE1AY	0.0224										
	Physical Collocation -Security Access System - New Card Activation, per Card Activation (First), per State			CLO	PE1A1	0.0579	27.50									
	Physical Collocation-Security Access System-Administrative Change, existing Access Card, per Request, per State, per Card			CLO	PE1AA		7.74									
	Physical Collocation - Security Access System - Replace Lost or Stolen Card, per Card			CLO	PE1AR		22.64									
	Physical Collocation - Security Access - Initial Key, per Key			CLO	PE1AK		13.01									
	Physical Collocation - Security Access - Key, Replace Lost or Stolen Key, per Key			CLO	PE1AL		13.01									
CFA																
	Physical Collocation - CFA Information Resend Request, per premises, per arrangement, per request			CLO	PE1C9		77.43									
Cable Records																
	Recurring Collocation Cable Records - per request			CLO	PE1CU	10.97										
	Recurring Collocation Cable Records - VG/DS0 Cable, per cable record			CLO	PE1CE	5.29										
	Recurring Collocation Cable Records - VG/DS0 Cable, per each 100 pair			CLO	PE1CT	0.08										
	Recurring Collocation Cable Records - DS1, per T1TIE			CLO	PE1C2	0.04										
	Recurring Collocation Cable Records - DS3, per T3TIE			CLO	PE1C4	0.13										
	Recurring Collocation Cable Records - Fiber Cable, per 99 fiber records			CLO	PE1CG	1.37										
	Physical Collocation, Cable Records,CAT5/RJ45			CLO	PE1C6	0.04										
Virtual to Physical																
	Physical Collocation - Virtual to Physical Collocation Relocation, per Voice Grade Circuit			CLO	PE1BV		33.00									
	Physical Collocation - Virtual to Physical Collocation Relocation, per DSO Circuit			CLO	PE1BO		33.00									
	Physical Collocation - Virtual to Physical Collocation Relocation, per DS1 Circuit			CLO	PE1B1		52.00									
	Physical Collocation - Virtual to Physical Collocation Relocation, per DS3 Circuit			CLO	PE1B3		52.00									

COLLOCATION - Louisiana

Att: 4 Exh: B

CATEGORY	RATE ELEMENTS	Interim	Zone	BCS	USOC	RATES($) Rec	Nonrecurring First	Nonrecurring Add'l	Nonrecurring Disconnect First	Nonrecurring Disconnect Add'l	Svc Order Submitted Elec per LSR SOMEC	Svc Order Submitted Manually per LSR SOMAN	Incremental Charge - Manual Svc Order vs. Electronic-1st SOMAN	Incremental Charge - Manual Svc Order vs. Electronic-Add'l SOMAN	Incremental Charge - Manual Svc Order vs. Electronic-Disc 1st SOMAN	Incremental Charge - Manual Svc Order vs. Electronic-Disc Add'l SOMAN
											OSS Rates($)					
	Physical Collocation - Virtual to Physical Collocation In-Place, Per Voice Grade Circuit			CLO	PE1BR		22.52									
	Physical Collocation Virtual to Physical Collocation In-Place, Per DSO Circuit			CLO	PE1BP		22.52									
	Physical Collocation - Virtual to Physical Collocation In-Place, Per DS1 Circuit			CLO	PE1BS		32.74									
	Physical Collocation - Virtual to Physical Collocation In-Place, per DS3 Circuit			CLO	PE1BE		32.74									
Entrance Cable																
	Physical Collocation - Fiber Cable Installation, Pricing, non-recurring charge, per Entrance Cable			CLO	PE1BD		841.54									
	Physical Collocation - Fiber Cable Support Structure, per Entrance Cable			CLO	PE1PM	18.31										
	Physical Collocation - Fiber Entrance Cable Installation, per Fiber			CLO	PE1ED		3.88									
VIRTUAL COLLOCATION																
Application																
	Virtual Collocation - Application Fee			AMTFS	EAF		1,770.40									
	Virtual Collocation - Co-Carrier Cross Connects/Direct Connect, Application Fee, per application			AMTFS	VE1CA		583.30									
	Virtual Collocation Administrative Only - Application Fee			AMTFS	VE1AF		741.97									
Space Preparation																
	Virtual Collocation - Floor Space, per sq. ft.			AMTFS	ESPVX	5.30										
Power																
	Virtual Collocation - Power, per fused amp			AMTFS	ESPAX	8.32										
Cross Connects (Cross Connects, Co-Carrier Cross Connects, and Ports)																
	Virtual Collocation - 2-wire cross-connect, loop, provisioning			UEANL, UEA, UDN, UAL, UHL, UCL, UEQ, UNCVX, UNCDX, UNCNX	UEAC2	0.0296	11.94	11.46								
	Virtual Collocation - 4-wire cross-connect, loop, provisioning			UEA, UHL, UCL, UDL, UNCVX, UNCDX	UEAC4	0.0591	12.04	11.53								
	Virtual collocation - Special Access & UNE, cross-connect per DS1			ULR, UXTD1, UNC1X, ULDD1, U1TD1, USLEL, UNLD1, USL, UEPEX, UEPDX	CNC1X	1.04	21.39	15.47								
	Virtual collocation - Special Access & UNE, cross-connect per DS3			USL, UE3, U1TD3, UXTS1, UXTD3, UNC3X, UNCSX, ULDD3, U1TS1, ULDS1, UDLSX, UNLD3, XDEST	CND3X	13.21	20.28	14.76								
	Virtual Collocation - 2-Fiber Cross Connects			UDL12, UDLO3, U1T48, U1T12, U1TO3, ULDO3, ULD12, ULD48, UDF	CNC2F	2.65	20.29	14.76								
	Virtual Collocation - 4-Fiber Cross Connects			UDL12, UDLO3, U1T48, U1T12, U1TO3, ULDO3, ULD12, ULD48, UDF	CNC4F	5.31	24.81	19.29								
	Virtual Collocation - Co-Carrier Cross Connects/Direct Connect - Fiber Cable Support Structure, per linear foot, per cable			AMTFS	VE1CB	0.001										
	Virtual Collocation - Co-Carrier Cross Connects/Direct Connect - Copper/Coax Cable Support Structure, per linear foot, per cable			AMTFS	VE1CD	0.0015										
	Virtual Collocation 2-Wire Cross Connect, Port			UEPSX, UEPSB, UEPSE, UEPSP, UEPSR, UEP2C	VE1R2	0.0296	11.94	11.46								
	Virtual Collocation 4-Wire Cross Connect, Port			UEPDD, UEPEX	VE1R4	0.0591	12.04	11.53								

COLLOCATION - Louisiana																	Att: 4 Exh: B
CATEGORY	RATE ELEMENTS	Interim	Zone	BCS	USOC	RATES($)					Svc Order Submitted Elec per LSR	Svc Order Submitted Manually per LSR	Incremental Charge - Manual Svc Order vs. Electronic-1st	Incremental Charge - Manual Svc Order vs. Electronic-Add'l	Incremental Charge - Manual Svc Order vs. Electronic-Disc 1st	Incremental Charge - Manual Svc Order vs. Electronic-Disc Add'l
						Rec	Nonrecurring		Nonrecurring Disconnect		OSS Rates($)					
							First	Add'l	First	Add'l	SOMEC	SOMAN	SOMAN	SOMAN	SOMAN	SOMAN
CFA																
	Virtual Collocation - CFA Information Resend Request, per Premises, per Arrangement, per request			AMTFS	VE1QR		77.43									
Cable Records																
	Virtual Collocation Cable Records - per request(LA only)			AMTFS	VE1BG	10.97										
	Virtual Collocation Cable Records - VG/DS0 Cable, per cable record(LA only)			AMTFS	VE1BH	5.29										
	Virtual Collocation Cable Records - VG/DS0 Cable, per each 100 pair(LA only)			AMTFS	VE1BJ	0.08										
	Virtual Collocation Cable Records - DS1, per T1TIE(LA only)			AMTFS	VE1BK	0.04										
	Virtual Collocation Cable Records - DS3, per T3TIE(LA only)			AMTFS	VE1BL	0.13										
	Virtual Collocation Cable Records - Fiber Cable, per 99 fiber records(LA only)			AMTFS	VE1BM	1.37										
	Virtual Collocation Cable Records - CAT 5/RJ45 (LA only)			AMTFS	VE1B6	0.04										
Security																
	Virtual collocation - Security escort, basic time, normally scheduled work hours			AMTFS	SPTBX		16.44	10.42								
	Virtual collocation - Security escort, overtime, outside of normally scheduled work hours on a normal working day			AMTFS	SPTOX		21.41	13.45								
	Virtual collocation - Security escort, premium time, outside of a scheduled work day			AMTFS	SPTPX		26.38	16.49								
Maintenance																
	Virtual collocation - Maintenance in CO - Basic, per half hour			AMTFS	CTRLX		27.12	10.42								
	Virtual collocation - Maintenance in CO - Overtime, per half hour			AMTFS	SPTOM		35.42	13.45								
	Virtual collocation - Maintenance in CO - Premium per half hour			AMTFS	SPTPM		43.72	16.49								
Entrance Cable																
	Virtual Collocation - Cable Installation Charge, per cable			AMTFS	ESPCX		841.54									
	Virtual Collocation - Cable Support Structure, per cable			AMTFS	ESPSX	16.02										
COLLOCATION IN THE REMOTE SITE																
Physical Remote Site Collocation																
	Physical Collocation in the Remote Site - Application Fee			CLORS	PE1RA		298.80									
	Cabinet Space in the Remote Site per Bay/ Rack			CLORS	PE1RB	225.39										
	Physical Collocation in the Remote Site - Security Access - Key			CLORS	PE1RD		13.01									
	Physical Collocation in the Remote Site - Space Availability Report per Premises Requested			CLORS	PE1SR		112.52									
	Physical Collocation in the Remote Site - Remote Site CLLI Code Request, per CLLI Code Requested			CLORS	PE1RE		36.47									
	Remote Site DLEC Data (BRSDD), per Compact Disk, per CO			CLORS	PE1RR		233.21									
	Physical Collocation - Security Escort for Basic Time - normally scheduled work, per half hour			CLORS	PE1BT		16.44	10.42								
	Physical Collocation - Security Escort for Overtime - outside of normally scheduled working hours on a scheduled work day, per half hour			CLORS	PE1OT		21.41	13.45								
	Physical Collocation - Security Escort for Premium Time - outside of scheduled work day, per half hour			CLORS	PE1PT		26.38	16.49								
Adjacent Remote Site Collocation																
	Remote Site-Adjacent Collocation-Application Fee			CLORS	PE1RU		755.62	755.62								
	Remote Site-Adjacent Collocation - Real Estate, per square foot			CLORS	PE1RT	0.134										
	Remote Site-Adjacent Collocation - AC Power, per breaker amp			CLORS	PE1RS	6.27										
NOTE: If Security Escort and/or Add'l Engineering Fees become necessary for adjacent remote site collocation, the Parties will negotiate appropriate rates.																
Virtual Remote Site Collocation																
	Virtual Collocation in the Remote Site - Application Fee			VE1RS	VE1RB		298.80									
	Virtual Collocation in the Remote Site - Per Bay/Rack of Space			VE1RS	VE1RC	225.39										
	Virtual Collocation in the Remote Site - Space Availability Report per Premises requested			VE1RS	VE1RR		112.52									
	Virtual Collocation in the Remote Site - Remote Site CLLI Code Request, per CLLI Code Requested			VE1RS	VE1RL		36.47									
ADJACENT COLLOCATION																

COLLOCATION - Louisiana

Att: 4 Exh: B

CATEGORY		RATE ELEMENTS	Interim	Zone	BCS	USOC	RATES($)					Svc Order Submitted Elec per LSR	Svc Order Submitted Manually per LSR	Incremental Charge - Manual Svc Order vs. Electronic-1st	Incremental Charge - Manual Svc Order vs. Electronic-Add'l	Incremental Charge - Manual Svc Order vs. Electronic-Disc 1st	Incremental Charge - Manual Svc Order vs. Electronic-Disc Add'l
							Rec	Nonrecurring		Nonrecurring Disconnect		OSS Rates($)					
								First	Add'l	First	Add'l	SOMEC	SOMAN	SOMAN	SOMAN	SOMAN	SOMAN
		Adjacent Collocation - Space Charge per Sq. Ft.			CLOAC	PE1JA	0.0552										
		Adjacent Collocation - Electrical Facility Charge per Linear Ft.			CLOAC	PE1JC	5.61										
		Adjacent Collocation - 2-Wire Cross-Connects			UEANL,UEQ,UEA,UCL, UAL, UHL, UDN	PE1JE	0.0245	11.94	11.46								
		Adjacent Collocation - 4-Wire Cross-Connects			UEA,UHL,UDL,UCL	PE1JF	0.0491	12.04	11.53								
		Adjacent Collocation - DS1 Cross-Connects			USL	PE1JG	0.9605	21.39	15.47								
		Adjacent Collocation - DS3 Cross-Connects			UE3	PE1JH	13.01	20.28	14.76								
		Adjacent Collocation - 2-Fiber Cross-Connect			CLOAC	PE1JJ	2.20	20.28	14.76								
		Adjacent Collocation - 4-Fiber Cross-Connect			CLOAC	PE1JK	4.21	24.81	19.29								
		Adjacent Collocation - Application Fee			CLOAC	PE1JB		1,543.20									
		Adjacent Collocation - 120V, Single Phase Standby Power Rate per AC Breaker Amp			CLOAC	PE1JL	5.45										
		Adjacent Collocation - 240V, Single Phase Standby Power Rate per AC Breaker Amp			CLOAC	PE1JM	10.92										
		Adjacent Collocation - 120V, Three Phase Standby Power Rate per AC Breaker Amp			CLOAC	PE1JN	16.37										
		Adjacent Collocation - 277V, Three Phase Standby Power Rate per AC Breaker Amp			CLOAC	PE1JO	37.80										

COLLOCATION - Mississippi

Att: 4 Exh: B

CATEGORY	RATE ELEMENTS	Interim	Zone	BCS	USOC	RATES($) Rec	Nonrecurring First	Nonrecurring Add'l	Nonrecurring Disconnect First	Nonrecurring Disconnect Add'l	Svc Order Submitted Elec per LSR	Svc Order Submitted Manually per LSR	Incremental Charge - Manual Svc Order vs. Electronic-1st	Incremental Charge - Manual Svc Order vs. Electronic-Add'l	Incremental Charge - Manual Svc Order vs. Electronic-Disc 1st	Incremental Charge - Manual Svc Order vs. Electronic-Disc Add'l
											OSS Rates($)					
							First	Add'l	First	Add'l	SOMEC	SOMAN	SOMAN	SOMAN	SOMAN	SOMAN
PHYSICAL COLLOCATION																
Application																
	Physical Collocation - Initial Application Fee			CLO	PE1BA		1,890.38									
	Physical Collocation - Subsequent Application Fee			CLO	PE1CA		1,575.69									
	Physical Collocation - Co-Carrier Cross Connects/Direct Connect, Application Fee, per application			CLO	PE1DT		583.13									
	Physical Collocation Administrative Only - Application Fee			CLO	PE1BL		740.76									
	Physical Collocation - Application Cost, Simple Augment			CLO	PE1KS		597.34		1.22							
	Physical Collocation - Application Cost, Minor Augment			CLO	PE1KM		837.57		1.22							
	Physical Collocation - Application Cost, Intermediate Augment			CLO	PE1K1		1,063.00		1.22							
	Physical Collocation - Application Cost - Major Augment			CLO	PE1KJ		2,422.00		1.22							
Space Preparation																
	Physical Collocation - Floor Space, per sq feet			CLO	PE1PJ	5.74										
	Physical Collocation - Space Enclosure, welded wire, first 50 square feet			CLO	PE1BX	165.23										
	Physical Collocation - Space enclosure, welded wire, first 100 square feet			CLO	PE1BW	183.20										
	Physical Collocation - Space enclosure, welded wire, each additional 50 square feet			CLO	PE1CW	17.97										
	Physical Collocation - Space Preparation - C.O. Modification per square ft.			CLO	PE1SK	2.30										
	Physical Collocation - Space Preparation, Common Systems Modifications-Cageless, per square foot			CLO	PE1SL	2.52										
	Physical Collocation - Space Preparation - Common Systems Modifications-Caged, per cage			CLO	PE1SM	85.67										
	Physical Collocation - Space Preparation - Firm Order Processing			CLO	PE1SJ		604.19									
	Physical Collocation - Space Availability Report, per Central Office Requested			CLO	PE1SR		1,081.40									
Power																
	Physical Collocation - Power, -48V DC Power - per Fused Amp Requested			CLO	PE1PL	7.33										
	Physical Collocation - Power, 120V AC Power, Single Phase, per Breaker Amp			CLO	PE1FB	5.29										
	Physical Collocation - Power, 240V AC Power, Single Phase, per Breaker Amp			CLO	PE1FD	10.58										
	Physical Collocation - Power, 120V AC Power, Three Phase, per Breaker Amp			CLO	PE1FE	15.87										
	Physical Collocation - Power, 277V AC Power, Three Phase, per Breaker Amp			CLO	PE1FG	36.65										
Cross Connects (Cross Connects, Co-Carrier Cross Connects, and Ports)																
	Physical Collocation - 2-wire cross-connect, loop, provisioning			UEANL,UEQ, UNCNX, UEA, UCL, UAL, UHL, UDN, UNCVX	PE1P2	0.0288	12.37	11.87	6.04	5.45						
	Physical Collocation - 4-wire cross-connect, loop, provisioning			UEA, UHL, UNCVX, UNCDX, UCL, UDL	PE1P4	0.0576	12.47	11.94	6.59	5.91						
	Physical Collocation -DS1 Cross-Connect for Physical Collocation, provisioning			WDS1L, WDS1S, UXTD1, ULDD1, USLEL, UNLD1, U1TD1, UNC1X, UEPSR, UEPSB, UEPSE, UEPSP, USL, UEPEX, UEPDX	PE1P1	1.14	22.16	16.02	6.60	5.97						
	Physical Collocation - DS3 Cross-Connect, provisioning			UE3, U1TD3, UXTD3, UXTS1, UNC3X, UNCSX, ULDD3, U1TS1, ULDS1, UNLD3, UEPEX, UEPDX, UEPSR, UEPSB, UEPSE, UEPSP	PE1P3	14.49	21.01	15.29	7.61	6.10						

COLLOCATION - Mississippi

Att: 4 Exh: B

CATEGORY	RATE ELEMENTS	Interim	Zone	BCS	USOC	RATES($) Rec	Nonrecurring First	Nonrecurring Add'l	Nonrecurring Disconnect First	Nonrecurring Disconnect Add'l	Svc Order Submitted Elec per LSR	Svc Order Submitted Manually per LSR	Incremental Charge - Manual Svc Order vs. Electronic- 1st	Incremental Charge - Manual Svc Order vs. Electronic- Add'l	Incremental Charge - Manual Svc Order vs. Electronic- Disc 1st	Incremental Charge - Manual Svc Order vs. Electronic- Disc Add'l
											OSS Rates($)					
							First	Add'l	First	Add'l	SOMEC	SOMAN	SOMAN	SOMAN	SOMAN	SOMAN
	Physical Collocation - 2-Fiber Cross-Connect			CLO, ULDO3, ULD12, ULD48, U1TO3, U1T12, U1T48, UDLO3, UDL12, UDF	PE1F2	2.87	21.01	15.29	7.61	6.10						
	Physical Collocation - 4-Fiber Cross-Connect			ULDO3, ULD12, ULD48, U1TO3, U1T12, U1T48, UDLO3, UDL12, UDF, UDFCX	PE1F4	5.10	25.70	19.97	10.01	8.50						
	Physical Collocation - Co-Carrier Cross Connects/Direct Connect - Fiber Cable Support Structure, per linear foot, per cable.			CLO	PE1ES	0.001										
	Physical Collocation - Co-Carrier Cross Connect/Direct Connect - Copper/Coax Cable Support Structure, per linear foot, per cable.			CLO	PE1DS	0.0015										
	Physical Collocation 2-Wire Cross Connect, Port			UEPSR, UEPSP, UEPSE, UEPSB, UEPSX, UEP2C	PE1R2	0.0288	12.37	11.87	6.04	5.45		15.75				
	Physical Collocation 4-Wire Cross Connect, Port			UEPEX, UEPDD	PE1R4	0.0576	12.47	11.94	6.59	5.91		15.75				
Security																
	Physical Collocation - Security Escort for Basic Time - normally scheduled work, per half hour			CLO	PE1BT		17.02	10.79								
	Physical Collocation - Security Escort for Overtime - outside of normally scheduled working hours on a scheduled work day, per half hour			CLO	PE1OT		22.17	13.94								
	Physical Collocation - Security Escort for Premium Time - outside of scheduled work day, per half hour			CLO	PE1PT		27.32	17.08								
	Physical Collocation - Security Access System, Security System, per Central Office			CLO	PE1AX	75.23										
	Physical Collocation -Security Access System - New Card Activation, per Card Activation (First), per State			CLO	PE1A1	0.0576	27.95									
	Physical Collocation-Security Access System-Administrative Change, existing Access Card, per Request, per State, per Card			CLO	PE1AA		7.84									
	Physical Collocation - Security Access System - Replace Lost or Stolen Card, per Card			CLO	PE1AR		22.91									
	Physical Collocation - Security Access - Initial Key, per Key			CLO	PE1AK		13.17									
	Physical Collocation - Security Access - Key, Replace Lost or Stolen Key, per Key			CLO	PE1AL		13.17									
CFA																
	Physical Collocation - CFA Information Resend Request, per premises, per arrangement, per request			CLO	PE1C9		77.41									
Cable Records - Note: The rates in the First & Additional columns will actually be billed as "Initial I" and "Subsequent S" respectively																
	Physical Collocation - Cable Records, per request			CLO	PE1CR		I 763.69	S 490.94	133.77							
	Physical Collocation, Cable Records, VG/DS0 Cable, per cable record (maximum 3600 records)			CLO	PE1CD		328.81		190.22							
	Physical Collocation, Cable Records, VG/DS0 Cable, per each 100 pair			CLO	PE1CO		4.84		5.93							
	Physical Collocation, Cable Records, DS1, per T1 TIE			CLO	PE1C1		2.27		2.78							
	Physical Collocation, Cable Records, DS3, per T3 TIE			CLO	PE1C3		7.92		9.72							
	Physical Collocation - Cable Records, Fiber Cable, per cable record (maximum 99 records)			CLO	PE1CB		84.98		77.58							
	Physical Collocation, Cable Records,CAT5/RJ45			CLO	PE1C5		2.27		2.78							
Virtual to Physical																
	Physical Collocation - Virtual to Physical Collocation Relocation, per Voice Grade Circuit			CLO	PE1BV		33.00									
	Physical Collocation - Virtual to Physical Collocation Relocation, per DSO Circuit			CLO	PE1BO		33.00									
	Physical Collocation - Virtual to Physical Collocation Relocation, per DS1 Circuit			CLO	PE1B1		52.00									
	Physical Collocation - Virtual to Physical Collocation Relocation, per DS3 Circuit			CLO	PE1B3		52.00									

COLLOCATION - Mississippi

Att: 4 Exh: B

CATEGORY	RATE ELEMENTS	Interim	Zone	BCS	USOC	RATES($) Rec	Nonrecurring First	Nonrecurring Add'l	Nonrecurring Disconnect First	Nonrecurring Disconnect Add'l	Svc Order Submitted Elec per LSR SOMEC	Svc Order Submitted Manually per LSR SOMAN	Incremental Charge - Manual Svc Order vs. Electronic- 1st SOMAN	Incremental Charge - Manual Svc Order vs. Electronic- Add'l SOMAN	Incremental Charge - Manual Svc Order vs. Electronic- Disc 1st SOMAN	Incremental Charge - Manual Svc Order vs. Electronic- Disc Add'l SOMAN
											OSS Rates($)					
	Physical Collocation - Virtual to Physical Collocation In-Place, Per Voice Grade Circuit			CLO	PE1BR		22.54									
	Physical Collocation Virtual to Physical Collocation In-Place, Per DSO Circuit			CLO	PE1BP		22.54									
	Physical Collocation - Virtual to Physical Collocation In-Place, Per DS1 Circuit			CLO	PE1BS		32.78									
	Physical Collocation - Virtual to Physical Collocation In-Place, per DS3 Circuit			CLO	PE1BE		32.78									
Entrance Cable																
	Physical Collocation - Fiber Cable Installation, Pricing, non-recurring charge, per Entrance Cable			CLO	PE1BD		926.27		22.62							
	Physical Collocation - Fiber Cable Support Structure, per Entrance Cable			CLO	PE1PM	17.42										
	Physical Collocation - Fiber Entrance Cable Installation, per Fiber			CLO	PE1ED		3.89									
VIRTUAL COLLOCATION																
Application																
	Virtual Collocation - Application Fee			AMTFS	EAF		1,212.25		0.51							
	Virtual Collocation - Co-Carrier Cross Connects/Direct Connect, Application Fee, per application			AMTFS	VE1CA		583.13									
	Virtual Collocation Administrative Only - Application Fee			AMTFS	VE1AF		740.76									
Space Preparation																
	Virtual Collocation - Floor Space, per sq. ft.			AMTFS	ESPVX	5.74										
Power																
	Virtual Collocation - Power, per fused amp			AMTFS	ESPAX	7.33										
Cross Connects (Cross Connects, Co-Carrier Cross Connects, and Ports)																
	Virtual Collocation - 2-wire cross-connect, loop, provisioning			UEANL, UEA, UDN, UAL, UHL, UCL, UEQ, UNCVX, UNCDX, UNCNX	UEAC2	0.0268	12.37	11.87	6.04	5.45						
	Virtual Collocation - 4-wire cross-connect, loop, provisioning			UEA, UHL, UCL, UDL, UNCVX, UNCDX	UEAC4	0.0536	12.47	11.94	6.59	5.91						
	Virtual Collocation - Special Access & UNE, cross-connect per DS1			ULR, UXTD1, UNC1X, ULDD1, U1TD1, USLEL, UNLD1, USL, UEPEX, UEPDX	CNC1X	1.14	22.16	16.02	6.60	5.97						
	Virtual collocation - Special Access & UNE, cross-connect per DS3			USL, UE3, U1TD3, UXTS1, UXTD3, UNC3X, UNCSX, ULDD3, U1TS1, ULDS1, UDLSX, UNLD3, XDEST	CND3X	14.49	21.01	15.29	7.61	6.10						
	Virtual Collocation - 2-Fiber Cross Connects			UDL12, UDLO3, U1T48, U1T12, U1TO3, ULDO3, ULD12, ULD48, UDF	CNC2F	2.91	21.01	15.29	7.61	6.10						
	Virtual Collocation - 4-Fiber Cross Connects			UDL12, UDLO3, U1T48, U1T12, U1TO3, ULDO3, ULD12, ULD48, UDF	CNC4F	5.82	25.70	19.97	10.01	8.50						
	Virtual Collocation - Co-Carrier Cross Connects/Direct Connect - Fiber Cable Support Structure, per linear foot, per cable			AMTFS	VE1CB	0.001										
	Virtual Collocation - Co-Carrier Cross Connects/Direct Connect - Copper/Coax Cable Support Structure, per linear foot, per cable			AMTFS	VE1CD	0.0015										
	Virtual Collocation 2-Wire Cross Connect, Port			UEPSX, UEPSB, UEPSE, UEPSP, UEPSR, UEP2C	VE1R2	0.0268	12.37	11.87	6.04	5.45						
	Virtual Collocation 4-Wire Cross Connect, Port			UEPDD, UEPEX	VE1R4	0.0536	12.47	11.94	6.59	5.91						

COLLOCATION - Mississippi																	Att: 4 Exh: B
CATEGORY		RATE ELEMENTS	Interim	Zone	BCS	USOC	RATES($)					Svc Order Submitted Elec per LSR	Svc Order Submitted Manually per LSR	Incremental Charge - Manual Svc Order vs. Electronic-1st	Incremental Charge - Manual Svc Order vs. Electronic-Add'l	Incremental Charge - Manual Svc Order vs. Electronic-Disc 1st	Incremental Charge - Manual Svc Order vs. Electronic-Disc Add'l
							Rec	Nonrecurring		Nonrecurring Disconnect		OSS Rates($)					
								First	Add'l	First	Add'l	SOMEC	SOMAN	SOMAN	SOMAN	SOMAN	SOMAN
	CFA																
		Virtual Collocation - CFA Information Resend Request, per Premises, per Arrangement, per request			AMTFS	VE1QR		77.41									
	Cable Records - Note: The rates in the First & Additional columns will actually be billed as "Initial I" & "Subsequent S" respectively																
		Virtual Collocation Cable Records - per request			AMTFS	VE1BA		I 763.69	S 490.94	133.77							
		Virtual Collocation Cable Records - VG/DS0 Cable, per cable record			AMTFS	VE1BB		328.81		190.22							
		Virtual Collocation Cable Records - VG/DS0 Cable, per each 100 pair			AMTFS	VE1BC		4.84		5.93							
		Virtual Collocation Cable Records - DS1, per T1TIE			AMTFS	VE1BD		2.27		2.78							
		Virtual Collocation Cable Records - DS3, per T3TIE			AMTFS	VE1BE		7.92		9.72							
		Virtual Collocation Cable Records - Fiber Cable, per 99 fiber records			AMTFS	VE1BF		84.98		77.58							
		Virtual Collocation Cable Records - CAT 5/RJ45			AMTFS	VE1B5		2.27		2.78							
	Security																
		Virtual collocation - Security escort, basic time, normally scheduled work hours			AMTFS	SPTBX		17.02	10.79								
		Virtual collocation - Security escort, overtime, outside of normally scheduled work hours on a normal working day			AMTFS	SPTOX		22.17	13.94								
		Virtual collocation - Security escort, premium time, outside of a scheduled work day			AMTFS	SPTPX		27.32	17.08								
	Maintenance																
		Virtual collocation - Maintenance in CO - Basic, per half hour			AMTFS	CTRLX		28.09	10.79								
		Virtual collocation - Maintenance in CO - Overtime, per half hour			AMTFS	SPTOM		36.69	13.94								
		Virtual collocation - Maintenance in CO - Premium per half hour			AMTFS	SPTPM		45.28	17.08								
	Entrance Cable																
		Virtual Collocation - Cable Installation Charge, per cable			AMTFS	ESPCX		926.27		22.62							
		Virtual Collocation - Cable Support Structure, per cable			AMTFS	ESPSX	15.24										
COLLOCATION IN THE REMOTE SITE																	
	Physical Remote Site Collocation																
		Physical Collocation in the Remote Site - Application Fee			CLORS	PE1RA		309.48		168.63							
		Cabinet Space in the Remote Site per Bay/ Rack			CLORS	PE1RB	210.05										
		Physical Collocation in the Remote Site - Security Access - Key			CLORS	PE1RD		13.17									
		Physical Collocation in the Remote Site - Space Availability Report per Premises Requested			CLORS	PE1SR		116.54									
		Physical Collocation in the Remote Site - Remote Site CLLI Code Request, per CLLI Code Requested			CLORS	PE1RE		37.77									
		Remote Site DLEC Data (BRSDD), per Compact Disk, per CO			CLORS	PE1RR		233.14									
		Physical Collocation - Security Escort for Basic Time - normally scheduled work, per half hour			CLORS	PE1BT		17.02	10.79								
		Physical Collocation - Security Escort for Overtime - outside of normally scheduled working hours on a scheduled work day, per half hour			CLORS	PE1OT		22.17	13.94								
		Physical Collocation - Security Escort for Premium Time - outside of scheduled work day, per half hour			CLORS	PE1PT		27.32	17.08								
	Adjacent Remote Site Collocation																
		Remote Site-Adjacent Collocation-Application Fee			CLORS	PE1RU		755.62	755.62								
		Remote Site-Adjacent Collocation - Real Estate, per square foot			CLORS	PE1RT	0.134										
		Remote Site-Adjacent Collocation - AC Power, per breaker amp			CLORS	PE1RS	6.27										
	NOTE: If Security Escort and/or Add'l Engineering Fees become necessary for adjacent remote site collocation, the Parties will negotiate appropriate rates.																
	Virtual Remote Site Collocation																
		Virtual Collocation in the Remote Site - Application Fee			VE1RS	VE1RB		309.48		168.63							
		Virtual Collocation in the Remote Site - Per Bay/Rack of Space			VE1RS	VE1RC	210.05										
		Virtual Collocation in the Remote Site - Space Availability Report per Premises requested			VE1RS	VE1RR		116.54									
		Virtual Collocation in the Remote Site - Remote Site CLLI Code Request, per CLLI Code Requested			VE1RS	VE1RL		37.77									
ADJACENT COLLOCATION																	

COLLOCATION - Mississippi																	Att: 4 Exh: B
CATEGORY		RATE ELEMENTS	Interim	Zone	BCS	USOC	RATES($)					Svc Order Submitted Elec per LSR	Svc Order Submitted Manually per LSR	Incremental Charge - Manual Svc Order vs. Electronic-1st	Incremental Charge - Manual Svc Order vs. Electronic-Add'l	Incremental Charge - Manual Svc Order vs. Electronic-Disc 1st	Incremental Charge - Manual Svc Order vs. Electronic-Disc Add'l
							Rec	Nonrecurring		Nonrecurring Disconnect		OSS Rates($)					
								First	Add'l	First	Add'l	SOMEC	SOMAN	SOMAN	SOMAN	SOMAN	SOMAN
		Adjacent Collocation - Space Charge per Sq. Ft.			CLOAC	PE1JA	0.0678										
		Adjacent Collocation - Electrical Facility Charge per Linear Ft.			CLOAC	PE1JC	4.68										
		Adjacent Collocation - 2-Wire Cross-Connects			UEANL,UEQ,UEA,UCL, UAL, UHL, UDN	PE1JE	0.0223	12.37	11.87	6.04	5.45						
		Adjacent Collocation - 4-Wire Cross-Connects			UEA,UHL,UDL,UCL	PE1JF	0.0446	12.47	11.94	6.59	5.91						
		Adjacent Collocation - DS1 Cross-Connects			USL	PE1JG	1.05	22.16	16.02	6.60	5.97						
		Adjacent Collocation - DS3 Cross-Connects			UE3	PE1JH	14.27	21.01	15.29	7.61	6.10						
		Adjacent Collocation - 2-Fiber Cross-Connect			CLOAC	PE1JJ	2.42	21.01	15.29	7.61	6.10						
		Adjacent Collocation - 4-Fiber Cross-Connect			CLOAC	PE1JK	4.62	25.70	19.97	10.01	8.50						
		Adjacent Collocation - Application Fee			CLOAC	PE1JB		1,585.83									
		Adjacent Collocation - 120V, Single Phase Standby Power Rate per AC Breaker Amp			CLOAC	PE1JL	5.29										
		Adjacent Collocation - 240V, Single Phase Standby Power Rate per AC Breaker Amp			CLOAC	PE1JM	10.58										
		Adjacent Collocation - 120V, Three Phase Standby Power Rate per AC Breaker Amp			CLOAC	PE1JN	15.87										
		Adjacent Collocation - 277V, Three Phase Standby Power Rate per AC Breaker Amp			CLOAC	PE1JO	36.65										

COLLOCATION - North Carolina														Att: 4 Exh: B			
CATEGORY		RATE ELEMENTS	Interim	Zone	BCS	USOC	RATES($)					Svc Order Submitted Elec per LSR	Svc Order Submitted Manually per LSR	Incremental Charge - Manual Svc Order vs. Electronic-1st	Incremental Charge - Manual Svc Order vs. Electronic-Add'l	Incremental Charge - Manual Svc Order vs. Electronic-Disc 1st	Incremental Charge - Manual Svc Order vs. Electronic-Disc Add'l
							Rec	Nonrecurring		Nonrecurring Disconnect		OSS Rates($)					
								First	Add'l	First	Add'l	SOMEC	SOMAN	SOMAN	SOMAN	SOMAN	SOMAN
PHYSICAL COLLOCATION																	
	Application																
		Physical Collocation - Initial Application Fee			CLO	PE1BA		2,322.00									
		Physical Collocation - Subsequent Application Fee			CLO	PE1CA		2,311.00									
		Physical Collocation - Co-Carrier Cross Connects/Direct Connect, Application Fee, per application			CLO	PE1DT		317.20									
		Physical Collocation Administrative Only - Application Fee			CLO	PE1BL		741.44									
		Physical Collocation - Application Cost, Simple Augment			CLO	PE1KS		269.83		1.15							
		Physical Collocation - Application Cost, Minor Augment			CLO	PE1KM		493.40		1.15							
		Physical Collocation - Application Cost, Intermediate Augment			CLO	PE1K1		1,012.00		1.15							
		Physical Collocation - Application Cost - Major Augment			CLO	PE1KJ		2,343.00		1.15							
	Space Preparation																
		Physical Collocation - Floor Space, per sq feet			CLO	PE1PJ	2.69										
		Physical Collocation - Space Enclosure, welded wire, first 50 square feet			CLO	PE1BX		534.44									
		Physical Collocation - Space enclosure, welded wire, first 100 square feet			CLO	PE1BW		559.81									
		Physical Collocation - Space enclosure, welded wire, each additional 50 square feet			CLO	PE1CW		25.37									
		Physical Collocation - Space Preparation - C.O. Modification per square ft.			CLO	PE1SK	2.42										
		Physical Collocation - Space Preparation, Common Systems Modifications-Cageless, per square foot			CLO	PE1SL	2.88										
		Physical Collocation - Space Preparation - Common Systems Modifications-Caged, per cage			CLO	PE1SM	97.98										
		Physical Collocation - Space Preparation - Firm Order Processing			CLO	PE1SJ		1,196.00									
		Physical Collocation - Space Availability Report, per Central Office Requested			CLO	PE1SR		2,140.00									
	Power																
		Physical Collocation - Power, -48V DC Power - per Fused Amp Requested			CLO	PE1PL	7.65										
		Physical Collocation - Power, 120V AC Power, Single Phase, per Breaker Amp			CLO	PE1FB	5.50										
		Physical Collocation - Power, 240V AC Power, Single Phase, per Breaker Amp			CLO	PE1FD	11.01										
		Physical Collocation - Power, 120V AC Power, Three Phase, per Breaker Amp			CLO	PE1FE	16.51										
		Physical Collocation - Power, 277V AC Power, Three Phase, per Breaker Amp			CLO	PE1FG	38.12										
	Cross Connects (Cross Connects, Co-Carrier Cross Connects, and Ports)																
		Physical Collocation - 2-wire cross-connect, loop, provisioning			UEANL,UEQ, UNCNX, UEA, UCL, UAL, UHL, UDN, UNCVX	PE1P2	0.0309	19.77	14.95								
		Physical Collocation - 4-wire cross-connect, loop, provisioning			UEA, UHL, UNCVX, UNCDX, UCL, UDL	PE1P4	0.0618	19.95	15.05								
		Physical Collocation -DS1 Cross-Connect for Physical Collocation, provisioning			WDS1L, WDS1S, UXTD1, ULDD1, USLEL, UNLD1, U1TD1, UNC1X, UEPSR, UEPSB, UEPSE, UEPSP, USL, UEPEX, UEPDX	PE1P1	1.38	39.15	23.20								
		Physical Collocation - DS3 Cross-Connect, provisioning			UE3, U1TD3, UXTD3, UXTS1, UNC3X, UNCSX, ULDD3, U1TS1, ULDS1, UNLD3, UEPEX, UEPDX, UEPSR, UEPSB, UEPSE, UEPSP	PE1P3	17.62	38.25	21.94								

COLLOCATION - North Carolina

Att: 4 Exh: B

CATEGORY	RATE ELEMENTS	Interim	Zone	BCS	USOC	RATES($) Rec	Nonrecurring First	Nonrecurring Add'l	Nonrecurring Disconnect First	Nonrecurring Disconnect Add'l	Svc Order Submitted Elec per LSR	Svc Order Submitted Manually per LSR	Incremental Charge - Manual Svc Order vs. Electronic-1st	Incremental Charge - Manual Svc Order vs. Electronic-Add'l	Incremental Charge - Manual Svc Order vs. Electronic-Disc 1st	Incremental Charge - Manual Svc Order vs. Electronic-Disc Add'l
											OSS Rates($)					
							First	Add'l	First	Add'l	SOMEC	SOMAN	SOMAN	SOMAN	SOMAN	SOMAN
	Physical Collocation - 2-Fiber Cross-Connect			CLO, ULDO3, ULD12, ULD48, U1TO3, U1T12, U1T48, UDLO3, UDL12, UDF	PE1F2	3.50	38.25	21.94								
	Physical Collocation - 4-Fiber Cross-Connect			ULDO3, ULD12, ULD48, U1TO3, U1T12, U1T48, UDLO3, UDL12, UDF, UDFCX	PE1F4	6.20	43.96	26.17								
	Physical Collocation - Co-Carrier Cross Connects/Direct Connect - Fiber Cable Support Structure, per linear foot, per cable.			CLO	PE1ES	0.0028										
	Physical Collocation - Co-Carrier Cross Connect/Direct Connect - Copper/Coax Cable Support Structure, per linear foot, per cable.			CLO	PE1DS	0.0041										
	Physical Collocation 2-Wire Cross Connect, Port			UEPSR, UEPSP, UEPSE, UEPSB, UEPSX, UEP2C	PE1R2	0.0309	19.77	14.95					26.94	12.76		
	Physical Collocation 4-Wire Cross Connect, Port			UEPEX, UEPDD	PE1R4	0.0618	19.95	15.05					26.94	12.76		
Security																
	Physical Collocation - Security Escort for Basic Time - normally scheduled work, per half hour			CLO	PE1BT		33.68	21.34								
	Physical Collocation - Security Escort for Overtime - outside of normally scheduled working hours on a scheduled work day, per half hour			CLO	PE1OT		43.87	27.57								
	Physical Collocation - Security Escort for Premium Time - outside of scheduled work day, per half hour			CLO	PE1PT		54.06	33.80								
	Physical Collocation - Security Access System - Security System per Central Office, per Sq. Ft.			CLO	PE1AY	0.0135										
	Physical Collocation -Security Access System - New Card Activation, per Card Activation (First), per State			CLO	PE1A1	0.0622	15.00									
	Physical Collocation-Security Access System-Administrative Change, existing Access Card, per Request, per State, per Card			CLO	PE1AA		15.51									
	Physical Collocation - Security Access System - Replace Lost or Stolen Card, per Card			CLO	PE1AR		15.00									
	Physical Collocation - Security Access - Initial Key, per Key			CLO	PE1AK		15.00									
	Physical Collocation - Security Access - Key, Replace Lost or Stolen Key, per Key			CLO	PE1AL		15.00									
CFA																
	Physical Collocation - CFA Information Resend Request, per premises, per arrangement, per request			CLO	PE1C9		77.48									
Cable Records - Note: The rates in the First & Additional columns will actually be billed as "Initial I" and "Subsequent S" respectively																
	Physical Collocation - Cable Records, per request			CLO	PE1CR		I 1458.00	S 937.29	245.00	245.00						
	Physical Collocation, Cable Records, VG/DS0 Cable, per cable record (maximum 3600 records)			CLO	PE1CD		622.69	622.69	346.35	346.35						
	Physical Collocation, Cable Records, VG/DS0 Cable, per each 100 pair			CLO	PE1CO		8.77	8.77	10.32	10.32						
	Physical Collocation, Cable Records, DS1, per T1 TIE			CLO	PE1C1		4.35	4.35	5.11	5.11						
	Physical Collocation, Cable Records, DS3, per T3 TIE			CLO	PE1C3		15.22	15.22	17.90	17.90						
	Physical Collocation - Cable Records, Fiber Cable, per cable record (maximum 99 records)			CLO	PE1CB		163.61	163.61	143.32	143.32						
	Physical Collocation, Cable Records,CAT5/RJ45			CLO	PE1C5		2.27		2.78							
Virtual to Physical																
	Physical Collocation - Virtual to Physical Collocation Relocation, per Voice Grade Circuit			CLO	PE1BV		33.00									
	Physical Collocation - Virtual to Physical Collocation Relocation, per DSO Circuit			CLO	PE1BO		33.00									
	Physical Collocation - Virtual to Physical Collocation Relocation, per DS1 Circuit			CLO	PE1B1		52.00									
	Physical Collocation - Virtual to Physical Collocation Relocation, per DS3 Circuit			CLO	PE1B3		52.00									

COLLOCATION - North Carolina

Att: 4 Exh: B

CATEGORY	RATE ELEMENTS	Interim	Zone	BCS	USOC	RATES($) Rec	Nonrecurring First	Nonrecurring Add'l	Nonrecurring Disconnect First	Nonrecurring Disconnect Add'l	Svc Order Submitted Elec per LSR	Svc Order Submitted Manually per LSR	Incremental Charge - Manual Svc Order vs. Electronic- 1st	Incremental Charge - Manual Svc Order vs. Electronic- Add'l	Incremental Charge - Manual Svc Order vs. Electronic- Disc 1st	Incremental Charge - Manual Svc Order vs. Electronic- Disc Add'l
											OSS Rates($)					
							First	Add'l	First	Add'l	SOMEC	SOMAN	SOMAN	SOMAN	SOMAN	SOMAN
	Physical Collocation - Virtual to Physical Collocation In-Place, Per Voice Grade Circuit			CLO	PE1BR		69.51	20.45								
	Physical Collocation Virtual to Physical Collocation In-Place, Per DSO Circuit			CLO	PE1BP		69.51	20.45								
	Physical Collocation - Virtual to Physical Collocation In-Place, Per DS1 Circuit			CLO	PE1BS		78.93	29.87								
	Physical Collocation - Virtual to Physical Collocation In-Place, per DS3 Circuit			CLO	PE1BE		75.11	26.04								
Entrance Cable																
	Physical Collocation - Fiber Cable Installation, Pricing, non-recurring charge, per Entrance Cable			CLO	PE1BD		1,233.00									
	Physical Collocation - Fiber Cable Support Structure, per Entrance Cable			CLO	PE1PM	20.57										
	Physical Collocation - Fiber Entrance Cable Installation, per Fiber			CLO	PE1ED		7.79									
VIRTUAL COLLOCATION																
Application																
	Virtual Collocation - Application Fee			AMTFS	EAF		1,195.00									
	Virtual Collocation - Co-Carrier Cross Connects/Direct Connect, Application Fee, per application			AMTFS	VE1CA		317.20									
	Virtual Collocation Administrative Only - Application Fee			AMTFS	VE1AF		741.44									
Space Preparation																
	Virtual Collocation - Floor Space, per sq. ft.	I		AMTFS	ESPVX	2.69										
Power																
	Virtual Collocation - Power, per fused amp	I		AMTFS	ESPAX	7.65										
Cross Connects (Cross Connects, Co-Carrier Cross Connects, and Ports)																
	Virtual Collocation - 2-wire cross-connect, loop, provisioning			UEANL, UEA, UDN, UAL, UHL, UCL, UEQ, UNCVX, UNCDX, UNCNX	UEAC2	0.0225	19.77	14.95								
	Virtual Collocation - 4-wire cross-connect, loop, provisioning			UEA, UHL, UCL, UDL, UNCVX, UNCDX	UEAC4	0.0449	19.95	15.05								
	Virtual collocation - Special Access & UNE, cross-connect per DS1			ULR, UXTD1, UNC1X, ULDD1, U1TD1, USLEL, UNLD1, USL, UEPEX, UEPDX	CNC1X	0.4195	39.15	23.20								
	Virtual collocation - Special Access & UNE, cross-connect per DS3			USL, UE3, U1TD3, UXTS1, UXTD3, UNC3X, UNCSX, ULDD3, U1TS1, ULDS1, UDLSX, UNLD3, XDEST	CND3X	4.41	38.25	21.94								
	Virtual Collocation - 2-Fiber Cross Connects			UDL12, UDLO3, U1T48, U1T12, U1TO3, ULDO3, ULD12, ULD48, UDF	CNC2F	1.96	38.25	21.94								
	Virtual Collocation - 4-Fiber Cross Connects			UDL12, UDLO3, U1T48, U1T12, U1TO3, ULDO3, ULD12, ULD48, UDF	CNC4F	3.93	43.96	26.17								
	Virtual Collocation - Co-Carrier Cross Connects/Direct Connect - Fiber Cable Support Structure, per linear foot, per cable			AMTFS	VE1CB	0.0028										
	Virtual Collocation - Co-Carrier Cross Connects/Direct Connect - Copper/Coax Cable Support Structure, per linear foot, per cable			AMTFS	VE1CD	0.0041										
	Virtual Collocation 2-Wire Cross Connect, Port			UEPSX, UEPSB, UEPSE, UEPSP, UEPSR, UEP2C	VE1R2	0.0225	19.77	14.95								
	Virtual Collocation 4-Wire Cross Connect, Port			UEPDD, UEPEX	VE1R4	0.0449	19.95	15.05								

COLLOCATION - North Carolina														Att: 4 Exh: B			
CATEGORY		RATE ELEMENTS	Interim	Zone	BCS	USOC	RATES($)					Svc Order Submitted Elec per LSR	Svc Order Submitted Manually per LSR	Incremental Charge - Manual Svc Order vs. Electronic-1st	Incremental Charge - Manual Svc Order vs. Electronic-Add'l	Incremental Charge - Manual Svc Order vs. Electronic-Disc 1st	Incremental Charge - Manual Svc Order vs. Electronic-Disc Add'l
							Rec	Nonrecurring		Nonrecurring Disconnect		OSS Rates($)					
								First	Add'l	First	Add'l	SOMEC	SOMAN	SOMAN	SOMAN	SOMAN	SOMAN
	CFA																
		Virtual Collocation - CFA Information Resend Request, per Premises, per Arrangement, per request			AMTFS	VE1QR		77.48									
	Cable Records - Note: The rates in the First & Additional columns will actually be billed as "Initial I" & "Subsequent S" respectively																
		Virtual Collocation Cable Records - per request			AMTFS	VE1BA		I 1458.00	S 937.29	245.00	245.00						
		Virtual Collocation Cable Records - VG/DS0 Cable, per cable record			AMTFS	VE1BB		622.69	622.69	346.35	346.35						
		Virtual Collocation Cable Records - VG/DS0 Cable, per each 100 pair			AMTFS	VE1BC		8.77	8.77	10.32	10.32						
		Virtual Collocation Cable Records - DS1, per T1TIE			AMTFS	VE1BD		4.35	4.35	5.11	5.11						
		Virtual Collocation Cable Records - DS3, per T3TIE			AMTFS	VE1BE		15.22	15.22	17.90	17.90						
		Virtual Collocation Cable Records - Fiber Cable, per 99 fiber records			AMTFS	VE1BF		163.61	163.61	143.32	143.32						
		Virtual Collocation Cable Records - CAT 5/RJ45			AMTFS	VE1B5		4.35	4.35	5.11	5.11						
	Security																
		Virtual collocation - Security escort, basic time, normally scheduled work hours			AMTFS	SPTBX		33.68	21.34								
		Virtual collocation - Security escort, overtime, outside of normally scheduled work hours on a normal working day			AMTFS	SPTOX		43.87	27.57								
		Virtual collocation - Security escort, premium time, outside of a scheduled work day			AMTFS	SPTPX		54.06	33.80								
	Maintenance																
		Virtual collocation - Maintenance in CO - Basic, per half hour			AMTFS	CTRLX		52.03	21.22								
		Virtual collocation - Maintenance in CO - Overtime, per half hour			AMTFS	SPTOM		69.48	27.81								
		Virtual collocation - Maintenance in CO - Premium per half hour			AMTFS	SPTPM		86.94	34.40								
	Entrance Cable																
		Virtual Collocation - Cable Installation Charge, per cable			AMTFS	ESPCX		1,233.00									
		Virtual Collocation - Cable Support Structure, per cable			AMTFS	ESPSX	13.28										
COLLOCATION IN THE REMOTE SITE																	
	Physical Remote Site Collocation																
		Physical Collocation in the Remote Site - Application Fee			CLORS	PE1RA		589.38		258.38							
		Cabinet Space in the Remote Site per Bay/ Rack			CLORS	PE1RB	218.07										
		Physical Collocation in the Remote Site - Security Access - Key			CLORS	PE1RD		15.00									
		Physical Collocation in the Remote Site - Space Availability Report per Premises Requested			CLORS	PE1SR		215.55									
		Physical Collocation in the Remote Site - Remote Site CLLI Code Request, per CLLI Code Requested			CLORS	PE1RE		70.65									
		Remote Site DLEC Data (BRSDD), per Compact Disk, per CO			CLORS	PE1RR		232.94									
		Physical Collocation - Security Escort for Basic Time - normally scheduled work, per half hour			CLORS	PE1BT		33.68	21.34								
		Physical Collocation - Security Escort for Overtime - outside of normally scheduled working hours on a scheduled work day, per half hour			CLORS	PE1OT		43.87	27.57								
		Physical Collocation - Security Escort for Premium Time - outside of scheduled work day, per half hour			CLORS	PE1PT		54.06	33.80								
	Adjacent Remote Site Collocation																
		Remote Site-Adjacent Collocation-Application Fee			CLORS	PE1RU		755.62	755.62								
		Remote Site-Adjacent Collocation - Real Estate, per square foot			CLORS	PE1RT	0.134										
		Remote Site-Adjacent Collocation - AC Power, per breaker amp			CLORS	PE1RS	6.27										
	NOTE: If Security Escort and/or Add'l Engineering Fees become necessary for adjacent remote site collocation, the Parties will negotiate appropriate rates.																
	Virtual Remote Site Collocation																
		Virtual Collocation in the Remote Site - Application Fee			VE1RS	VE1RB		589.38		258.38							
		Virtual Collocation in the Remote Site - Per Bay/Rack of Space			VE1RS	VE1RC	218.07										
		Virtual Collocation in the Remote Site - Space Availability Report per Premises requested			VE1RS	VE1RR		215.55									
		Virtual Collocation in the Remote Site - Remote Site CLLI Code Request, per CLLI Code Requested			VE1RS	VE1RL		70.65									
ADJACENT COLLOCATION																	

COLLOCATION - North Carolina

Att: 4 Exh: B

CATEGORY		RATE ELEMENTS	Interim	Zone	BCS	USOC	RATES($)					Svc Order Submitted Elec per LSR	Svc Order Submitted Manually per LSR	Incremental Charge - Manual Svc Order vs. Electronic-1st	Incremental Charge - Manual Svc Order vs. Electronic-Add'l	Incremental Charge - Manual Svc Order vs. Electronic-Disc 1st	Incremental Charge - Manual Svc Order vs. Electronic-Disc Add'l
							Rec	Nonrecurring		Nonrecurring Disconnect		OSS Rates($)					
								First	Add'l	First	Add'l	SOMEC	SOMAN	SOMAN	SOMAN	SOMAN	SOMAN
		Adjacent Collocation - Space Charge per Sq. Ft.			CLOAC	PE1JA	0.1555										
		Adjacent Collocation - Electrical Facility Charge per Linear Ft.			CLOAC	PE1JC	5.78										
		Adjacent Collocation - 2-Wire Cross-Connects			UEANL,UEQ,UEA,UCL, UAL, UHL, UDN	PE1JE	0.0239	19.77	14.95								
		Adjacent Collocation - 4-Wire Cross-Connects			UEA,UHL,UDL,UCL	PE1JF	0.0477	19.95	15.05								
		Adjacent Collocation - DS1 Cross-Connects			USL	PE1JG	1.28	39.15	23.20								
		Adjacent Collocation - DS3 Cross-Connects			UE3	PE1JH	17.35	38.25	21.94								
		Adjacent Collocation - 2-Fiber Cross-Connect			CLOAC	PE1JJ	2.94	38.25	21.94								
		Adjacent Collocation - 4-Fiber Cross-Connect			CLOAC	PE1JK	5.62	43.96	26.17								
		Adjacent Collocation - Application Fee			CLOAC	PE1JB		2,266.00		0.5842							
		Adjacent Collocation - 120V, Single Phase Standby Power Rate per AC Breaker Amp			CLOAC	PE1JL	5.50										
		Adjacent Collocation - 240V, Single Phase Standby Power Rate per AC Breaker Amp			CLOAC	PE1JM	11.01										
		Adjacent Collocation - 120V, Three Phase Standby Power Rate per AC Breaker Amp			CLOAC	PE1JN	16.51										
		Adjacent Collocation - 277V, Three Phase Standby Power Rate per AC Breaker Amp			CLOAC	PE1JO	38.12										
	Note: Rates displaying an "I" in Interim column are interim as a result of a Commission order.																

COLLOCATION - South Carolina

Att: 4 Exh: B

CATEGORY	RATE ELEMENTS	Interim	Zone	BCS	USOC	RATES($) Rec	Nonrecurring First	Nonrecurring Add'l	Nonrecurring Disconnect First	Nonrecurring Disconnect Add'l	Svc Order Submitted Elec per LSR	Svc Order Submitted Manually per LSR	Incremental Charge - Manual Svc Order vs. Electronic-1st	Incremental Charge - Manual Svc Order vs. Electronic-Add'l	Incremental Charge - Manual Svc Order vs. Electronic-Disc 1st	Incremental Charge - Manual Svc Order vs. Electronic-Disc Add'l
											OSS Rates($)					
											SOMEC	SOMAN	SOMAN	SOMAN	SOMAN	SOMAN
PHYSICAL COLLOCATION																
Application																
	Physical Collocation - Initial Application Fee			CLO	PE1BA		1,883.67		0.51							
	Physical Collocation - Subsequent Application Fee			CLO	PE1CA		1,570.10		0.51							
	Physical Collocation - Co-Carrier Cross Connects/Direct Connect, Application Fee, per application			CLO	PE1DT		584.42									
	Physical Collocation Administrative Only - Application Fee			CLO	PE1BL		743.66									
	Physical Collocation - Application Cost, Simple Augment			CLO	PE1KS		594.27		1.21							
	Physical Collocation - Application Cost, Minor Augment			CLO	PE1KM		833.26		1.21							
	Physical Collocation - Application Cost, Intermediate Augment			CLO	PE1K1		1,058.00		1.21							
	Physical Collocation - Application Cost - Major Augment			CLO	PE1KJ		2,409.00		1.21							
Space Preparation																
	Physical Collocation - Floor Space, per sq feet			CLO	PE1PJ	3.95										
	Physical Collocation - Space Enclosure, welded wire, first 50 square feet			CLO	PE1BX	197.69										
	Physical Collocation - Space enclosure, welded wire, first 100 square feet			CLO	PE1BW	219.19										
	Physical Collocation - Space enclosure, welded wire, each additional 50 square feet			CLO	PE1CW	21.50										
	Physical Collocation - Space Preparation - C.O. Modification per square ft.			CLO	PE1SK	2.75										
	Physical Collocation - Space Preparation, Common Systems Modifications-Cageless, per square foot			CLO	PE1SL	3.24										
	Physical Collocation - Space Preparation - Common Systems Modifications-Caged, per cage			CLO	PE1SM	110.16										
	Physical Collocation - Space Preparation - Firm Order Processing			CLO	PE1SJ		602.05									
	Physical Collocation - Space Availability Report, per Central Office Requested			CLO	PE1SR		1,077.57									
Power																
	Physical Collocation - Power, -48V DC Power - per Fused Amp Requested			CLO	PE1PL	9.19										
	Physical Collocation - Power, 120V AC Power, Single Phase, per Breaker Amp			CLO	PE1FB	5.67										
	Physical Collocation - Power, 240V AC Power, Single Phase, per Breaker Amp			CLO	PE1FD	11.36										
	Physical Collocation - Power, 120V AC Power, Three Phase, per Breaker Amp			CLO	PE1FE	17.03										
	Physical Collocation - Power, 277V AC Power, Three Phase, per Breaker Amp			CLO	PE1FG	39.33										
Cross Connects (Cross Connects, Co-Carrier Cross Connects, and Ports)																
	Physical Collocation - 2-wire cross-connect, loop, provisioning			UEANL,UEQ, UNCNX, UEA, UCL, UAL, UHL, UDN, UNCVX	PE1P2	0.0341	12.32	11.83	6.04	5.45						
	Physical Collocation - 4-wire cross-connect, loop, provisioning			UEA, UHL, UNCVX, UNCDX, UCL, UDL	PE1P4	0.0682	12.42	11.90	6.40	5.74						
	Physical Collocation -DS1 Cross-Connect for Physical Collocation, provisioning			WDS1L, WDS1S, UXTD1, ULDD1, USLEL, UNLD1, U1TD1, UNC1X, UEPSR, UEPSB, UEPSE, UEPSP, USL, UEPEX, UEPDX	PE1P1	1.12	22.08	15.96	6.42	5.80						
	Physical Collocation - DS3 Cross-Connect, provisioning			UE3, U1TD3, UXTD3, UXTS1, UNC3X, UNCSX, ULDD3, U1TS1, ULDS1, UNLD3, UEPEX, UEPDX, UEPSR, UEPSB, UEPSE, UEPSP	PE1P3	14.21	20.94	15.23	7.39	5.93						

COLLOCATION - South Carolina

Att: 4 Exh: B

CATEGORY	RATE ELEMENTS	Interim	Zone	BCS	USOC	RATES($) Rec	Nonrecurring First	Nonrecurring Add'l	Nonrecurring Disconnect First	Nonrecurring Disconnect Add'l	Svc Order Submitted Elec per LSR	Svc Order Submitted Manually per LSR	Incremental Charge - Manual Svc Order vs. Electronic- 1st	Incremental Charge - Manual Svc Order vs. Electronic- Add'l	Incremental Charge - Manual Svc Order vs. Electronic- Disc 1st	Incremental Charge - Manual Svc Order vs. Electronic- Disc Add'l
											OSS Rates($)					
											SOMEC	SOMAN	SOMAN	SOMAN	SOMAN	SOMAN
	Physical Collocation - 2-Fiber Cross-Connect			CLO, ULDO3, ULD12, ULD48, U1TO3, U1T12, U1T48, UDLO3, UDL12, UDF	PE1F2	2.82	20.94	15.23	7.40	5.93						
	Physical Collocation - 4-Fiber Cross-Connect			ULDO3, ULD12, ULD48, U1TO3, U1T12, U1T48, UDLO3, UDL12, UDF, UDFCX	PE1F4	5.01	25.61	19.90	9.73	8.26						
	Physical Collocation - Co-Carrier Cross Connects/Direct Connect - Fiber Cable Support Structure, per linear foot, per cable.			CLO	PE1ES	0.001										
	Physical Collocation - Co-Carrier Cross Connect/Direct Connect - Copper/Coax Cable Support Structure, per linear foot, per cable.			CLO	PE1DS	0.0015										
	Physical Collocation 2-Wire Cross Connect, Port			UEPSR, UEPSP, UEPSE, UEPSB, UEPSX, UEP2C	PE1R2	0.0341	12.32	11.83	6.04	5.45		15.69				
	Physical Collocation 4-Wire Cross Connect, Port			UEPEX, UEPDD	PE1R4	0.0682	12.42	11.90	6.40	5.74		15.69				
Security																
	Physical Collocation - Security Escort for Basic Time - normally scheduled work, per half hour			CLO	PE1BT		16.96	10.75								
	Physical Collocation - Security Escort for Overtime - outside of normally scheduled working hours on a scheduled work day, per half hour			CLO	PE1OT		22.10	13.89								
	Physical Collocation - Security Escort for Premium Time - outside of scheduled work day, per half hour			CLO	PE1PT		27.23	17.02								
	Physical Collocation - Security Access System, Security System, per Central Office			CLO	PE1AX	74.72										
	Physical Collocation -Security Access System - New Card Activation, per Card Activation (First), per State			CLO	PE1A1	0.0601	27.85									
	Physical Collocation-Security Access System-Administrative Change, existing Access Card, per Request, per State, per Card			CLO	PE1AA		7.81									
	Physical Collocation - Security Access System - Replace Lost or Stolen Card, per Card			CLO	PE1AR		22.83									
	Physical Collocation - Security Access - Initial Key, per Key			CLO	PE1AK		13.13									
	Physical Collocation - Security Access - Key, Replace Lost or Stolen Key, per Key			CLO	PE1AL		13.13									
CFA																
	Physical Collocation - CFA Information Resend Request, per premises, per arrangement, per request			CLO	PE1C9		77.71									
Cable Records - Note: The rates in the First & Additional columns will actually be billed as "Initial I" and "Subsequent S" respectively																
	Physical Collocation - Cable Records, per request			CLO	PE1CR		I 760.98	S 489.20	133.29							
	Physical Collocation, Cable Records, VG/DS0 Cable, per cable record (maximum 3600 records)			CLO	PE1CD		327.65		189.54							
	Physical Collocation, Cable Records, VG/DS0 Cable, per each 100 pair			CLO	PE1CO		4.82		5.91							
	Physical Collocation, Cable Records, DS1, per T1 TIE			CLO	PE1C1		2.26		2.77							
	Physical Collocation, Cable Records, DS3, per T3 TIE			CLO	PE1C3		7.90		9.68							
	Physical Collocation - Cable Records, Fiber Cable, per cable record (maximum 99 records)			CLO	PE1CB		84.68		77.30							
	Physical Collocation, Cable Records,CAT5/RJ45			CLO	PE1C5		2.26		2.77							
Virtual to Physical																
	Physical Collocation - Virtual to Physical Collocation Relocation, per Voice Grade Circuit			CLO	PE1BV		33.00									
	Physical Collocation - Virtual to Physical Collocation Relocation, per DSO Circuit			CLO	PE1BO		33.00									
	Physical Collocation - Virtual to Physical Collocation Relocation, per DS1 Circuit			CLO	PE1B1		52.00									
	Physical Collocation - Virtual to Physical Collocation Relocation, per DS3 Circuit			CLO	PE1B3		52.00									

COLLOCATION - South Carolina

Att: 4 Exh: B

CATEGORY	RATE ELEMENTS	Interim	Zone	BCS	USOC	RATES($) Rec	Nonrecurring First	Nonrecurring Add'l	Nonrecurring Disconnect First	Nonrecurring Disconnect Add'l	Svc Order Submitted Elec per LSR	Svc Order Submitted Manually per LSR	Incremental Charge - Manual Svc Order vs. Electronic- 1st	Incremental Charge - Manual Svc Order vs. Electronic- Add'l	Incremental Charge - Manual Svc Order vs. Electronic- Disc 1st	Incremental Charge - Manual Svc Order vs. Electronic- Disc Add'l
											OSS Rates($)					
							First	Add'l	First	Add'l	SOMEC	SOMAN	SOMAN	SOMAN	SOMAN	SOMAN
	Physical Collocation - Virtual to Physical Collocation In-Place, Per Voice Grade Circuit			CLO	PE1BR		22.43									
	Physical Collocation Virtual to Physical Collocation In-Place, Per DSO Circuit			CLO	PE1BP		22.43									
	Physical Collocation - Virtual to Physical Collocation In-Place, Per DS1 Circuit			CLO	PE1BS		32.61									
	Physical Collocation - Virtual to Physical Collocation In-Place, per DS3 Circuit			CLO	PE1BE		32.61									
Entrance Cable																
	Physical Collocation - Fiber Cable Installation, Pricing, non-recurring charge, per Entrance Cable			CLO	PE1BD		794.22		22.54							
	Physical Collocation - Fiber Cable Support Structure, per Entrance Cable			CLO	PE1PM	21.33										
	Physical Collocation - Fiber Entrance Cable Installation, per Fiber			CLO	PE1ED		3.87									
VIRTUAL COLLOCATION																
Application																
	Virtual Collocation - Application Fee			AMTFS	EAF		1,207.95		0.51							
	Virtual Collocation - Co-Carrier Cross Connects/Direct Connect, Application Fee, per application			AMTFS	VE1CA		584.42									
	Virtual Collocation Administrative Only - Application Fee			AMTFS	VE1AF		743.66									
Space Preparation																
	Virtual Collocation - Floor Space, per sq. ft.			AMTFS	ESPVX	3.95										
Power																
	Virtual Collocation - Power, per fused amp			AMTFS	ESPAX	9.19										
Cross Connects (Cross Connects, Co-Carrier Cross Connects, and Ports)																
	Virtual Collocation - 2-wire cross-connect, loop, provisioning			UEANL, UEA, UDN, UAL, UHL, UCL, UEQ, UNCVX, UNCDX, UNCNX	UEAC2	0.0317	12.32	11.83	6.04	5.45						
	Virtual Collocation - 4-wire cross-connect, loop, provisioning			UEA, UHL, UCL, UDL, UNCVX, UNCDX	UEAC4	0.0634	12.42	11.90	6.40	5.74						
	Virtual collocation - Special Access & UNE,cross-connect per DS1			ULR, UXTD1, UNC1X, ULDD1, U1TD1, USLEL, UNLD1, USL, UEPEX, UEPDX	CNC1X	1.12	22.08	15.96	6.42	5.80						
	Virtual collocation - Special Access & UNE, cross-connect per DS3			USL, UE3, U1TD3, UXTS1, UXTD3, UNC3X, UNCSX, ULDD3, U1TS1, ULDS1, UDLSX, UNLD3, XDEST	CND3X	14.21	20.94	15.23	7.39	5.93						
	Virtual Collocation - 2-Fiber Cross Connects			UDL12, UDLO3, U1T48, U1T12, U1TO3, ULDO3, ULD12, ULD48, UDF	CNC2F	2.86	20.94	15.23	7.40	5.93						
	Virtual Collocation - 4-Fiber Cross Connects			UDL12, UDLO3, U1T48, U1T12, U1TO3, ULDO3, ULD12, ULD48, UDF	CNC4F	5.71	25.61	19.90	9.73	8.26						
	Virtual Collocation - Co-Carrier Cross Connects/Direct Connect - Fiber Cable Support Structure, per linear foot, per cable			AMTFS	VE1CB	0.001										
	Virtual Collocation - Co-Carrier Cross Connects/Direct Connect - Copper/Coax Cable Support Structure, per linear foot, per cable			AMTFS	VE1CD	0.0015										
	Virtual Collocation 2-Wire Cross Connect, Port			UEPSX, UEPSB, UEPSE, UEPSP, UEPSR, UEP2C	VE1R2	0.0317	12.32	11.83	6.04	5.45						
	Virtual Collocation 4-Wire Cross Connect, Port			UEPDD, UEPEX	VE1R4	0.0634	12.42	11.90	6.40	5.74						

COLLOCATION - South Carolina														Att: 4 Exh: B			
CATEGORY	RATE ELEMENTS	Interim	Zone	BCS	USOC	RATES($)					Svc Order Submitted Elec per LSR	Svc Order Submitted Manually per LSR	Incremental Charge - Manual Svc Order vs. Electronic-1st	Incremental Charge - Manual Svc Order vs. Electronic-Add'l	Incremental Charge - Manual Svc Order vs. Electronic-Disc 1st	Incremental Charge - Manual Svc Order vs. Electronic-Disc Add'l
						Rec	Nonrecurring		Nonrecurring Disconnect		OSS Rates($)					
							First	Add'l	First	Add'l	SOMEC	SOMAN	SOMAN	SOMAN	SOMAN	SOMAN
CFA																
	Virtual Collocation - CFA Information Resend Request, per Premises, per Arrangement, per request			AMTFS	VE1QR		77.71									
Cable Records - Note: The rates in the First & Additional columns will actually be billed as "Initial I" & "Subsequent S" respectively																
	Virtual Collocation Cable Records - per request			AMTFS	VE1BA		I 760.98	S 489.20	133.29							
	Virtual Collocation Cable Records - VG/DS0 Cable, per cable record			AMTFS	VE1BB		327.65		189.54							
	Virtual Collocation Cable Records - VG/DS0 Cable, per each 100 pair			AMTFS	VE1BC		4.82		5.91							
	Virtual Collocation Cable Records - DS1, per T1TIE			AMTFS	VE1BD		2.26		2.77							
	Virtual Collocation Cable Records - DS3, per T3TIE			AMTFS	VE1BE		7.90		9.68							
	Virtual Collocation Cable Records - Fiber Cable, per 99 fiber records			AMTFS	VE1BF		84.68		77.30							
	Virtual Collocation Cable Records - CAT 5/RJ45			AMTFS	VE1B5		2.26		2.77							
Security																
	Virtual collocation - Security escort, basic time, normally scheduled work hours			AMTFS	SPTBX		16.96	10.75								
	Virtual collocation - Security escort, overtime, outside of normally scheduled work hours on a normal working day			AMTFS	SPTOX		22.10	13.89								
	Virtual collocation - Security escort, premium time, outside of a scheduled work day			AMTFS	SPTPX		27.23	17.02								
Maintenance																
	Virtual collocation - Maintenance in CO - Basic, per half hour			AMTFS	CTRLX		27.99	10.75								
	Virtual collocation - Maintenance in CO - Overtime, per half hour			AMTFS	SPTOM		36.56	13.89								
	Virtual collocation - Maintenance in CO - Premium per half hour			AMTFS	SPTPM		45.12	17.02								
Entrance Cable																
	Virtual Collocation - Cable Installation Charge, per cable			AMTFS	ESPCX		794.22		22.54							
	Virtual Collocation - Cable Support Structure, per cable			AMTFS	ESPSX	18.66										
COLLOCATION IN THE REMOTE SITE																
Physical Remote Site Collocation																
	Physical Collocation in the Remote Site - Application Fee			CLORS	PE1RA		308.38		168.60							
	Cabinet Space in the Remote Site per Bay/ Rack			CLORS	PE1RB	246.44										
	Physical Collocation in the Remote Site - Security Access - Key			CLORS	PE1RD		13.13									
	Physical Collocation in the Remote Site - Space Availability Report per Premises Requested			CLORS	PE1SR		116.13									
	Physical Collocation in the Remote Site - Remote Site CLLI Code Request, per CLLI Code Requested			CLORS	PE1RE		37.64									
	Remote Site DLEC Data (BRSDD), per Compact Disk, per CO			CLORS	PE1RR		234.50									
	Physical Collocation - Security Escort for Basic Time - normally scheduled work, per half hour			CLORS	PE1BT		16.96	10.75								
	Physical Collocation - Security Escort for Overtime - outside of normally scheduled working hours on a scheduled work day, per half hour			CLORS	PE1OT		22.10	13.89								
	Physical Collocation - Security Escort for Premium Time - outside of scheduled work day, per half hour			CLORS	PE1PT		27.23	17.02								
Adjacent Remote Site Collocation																
	Remote Site-Adjacent Collocation-Application Fee			CLORS	PE1RU		755.62	755.62								
	Remote Site-Adjacent Collocation - Real Estate, per square foot			CLORS	PE1RT	0.134										
	Remote Site-Adjacent Collocation - AC Power, per breaker amp			CLORS	PE1RS	6.27										
NOTE: If Security Escort and/or Add'l Engineering Fees become necessary for adjacent remote site collocation, the Parties will negotiate appropriate rates.																
Virtual Remote Site Collocation																
	Virtual Collocation in the Remote Site - Application Fee			VE1RS	VE1RB		616.76		337.19							
	Virtual Collocation in the Remote Site - Per Bay/Rack of Space			VE1RS	VE1RC	246.44										
	Virtual Collocation in the Remote Site - Space Availability Report per Premises requested			VE1RS	VE1RR		232.25									
	Virtual Collocation in the Remote Site - Remote Site CLLI Code Request, per CLLI Code Requested			VE1RS	VE1RL		75.27									
ADJACENT COLLOCATION																

COLLOCATION - South Carolina																	Att: 4 Exh: B
CATEGORY		RATE ELEMENTS	Interim	Zone	BCS	USOC	RATES($)					Svc Order Submitted Elec per LSR	Svc Order Submitted Manually per LSR	Incremental Charge - Manual Svc Order vs. Electronic-1st	Incremental Charge - Manual Svc Order vs. Electronic-Add'l	Incremental Charge - Manual Svc Order vs. Electronic-Disc 1st	Incremental Charge - Manual Svc Order vs. Electronic-Disc Add'l
							Rec	Nonrecurring		Nonrecurring Disconnect		OSS Rates($)					
								First	Add'l	First	Add'l	SOMEC	SOMAN	SOMAN	SOMAN	SOMAN	SOMAN
		Adjacent Collocation - Space Charge per Sq. Ft.			CLOAC	PE1JA	0.0939										
		Adjacent Collocation - Electrical Facility Charge per Linear Ft.			CLOAC	PE1JC	6.40										
		Adjacent Collocation - 2-Wire Cross-Connects			UEANL,UEQ,UEA,UCL, UAL, UHL, UDN	PE1JE	0.0264	12.32	11.83	6.04	5.45						
		Adjacent Collocation - 4-Wire Cross-Connects			UEA,UHL,UDL,UCL	PE1JF	0.0527	12.42	11.90	6.40	5.74						
		Adjacent Collocation - DS1 Cross-Connects			USL	PE1JG	1.03	22.08	15.96	6.42	5.80						
		Adjacent Collocation - DS3 Cross-Connects			UE3	PE1JH	14.00	20.94	15.23	7.39	5.93						
		Adjacent Collocation - 2-Fiber Cross-Connect			CLOAC	PE1JJ	2.37	20.94	15.23	7.40	5.93						
		Adjacent Collocation - 4-Fiber Cross-Connect			CLOAC	PE1JK	4.53	25.61	19.90	9.73	8.26						
		Adjacent Collocation - Application Fee			CLOAC	PE1JB		1,580.20									
		Adjacent Collocation - 120V, Single Phase Standby Power Rate per AC Breaker Amp			CLOAC	PE1JL	5.67										
		Adjacent Collocation - 240V, Single Phase Standby Power Rate per AC Breaker Amp			CLOAC	PE1JM	11.36										
		Adjacent Collocation - 120V, Three Phase Standby Power Rate per AC Breaker Amp			CLOAC	PE1JN	17.03										
		Adjacent Collocation - 277V, Three Phase Standby Power Rate per AC Breaker Amp			CLOAC	PE1JO	39.33										

COLLOCATION - Tennessee																	Att: 4 Exh: B
CATEGORY		RATE ELEMENTS	Interim	Zone	BCS	USOC	RATES($)					Svc Order Submitted Elec per LSR	Svc Order Submitted Manually per LSR	Incremental Charge - Manual Svc Order vs. Electronic-1st	Incremental Charge - Manual Svc Order vs. Electronic-Add'l	Incremental Charge - Manual Svc Order vs. Electronic-Disc 1st	Incremental Charge - Manual Svc Order vs. Electronic-Disc Add'l
							Rec	Nonrecurring		Nonrecurring Disconnect		OSS Rates($)					
								First	Add'l	First	Add'l	SOMEC	SOMAN	SOMAN	SOMAN	SOMAN	SOMAN
PHYSICAL COLLOCATION																	
	Application																
		Physical Collocation - Initial Application Fee			CLO	PE1BA		1,285.98									
		Physical Collocation - Subsequent Application Fee			CLO	PE1CA		1,085.48									
		Physical Collocation - Co-Carrier Cross Connects/Direct Connect, Application Fee, per application			CLO	PE1DT		585.09									
		Physical Collocation - Power Reconfiguration Only, Application Fee			CLO	PE1PR		400.10									
		Physical Collocation Administrative Only - Application Fee			CLO	PE1BL		743.25									
	Space Preparation																
		Physical Collocation - Floor Space, per sq feet			CLO	PE1PJ	5.94										
		Physical Collocation - Space Enclosure, welded wire, first 50 square feet			CLO	PE1BX	197.09										
		Physical Collocation - Space enclosure, welded wire, first 100 square feet			CLO	PE1BW	218.53										
		Physical Collocation - Space enclosure, welded wire, each additional 50 square feet			CLO	PE1CW	21.44										
		Physical Collocation - Space Preparation - C.O. Modification per square ft.			CLO	PE1SK	2.74										
		Physical Collocation - Space Preparation, Common Systems Modifications-Cageless, per square foot			CLO	PE1SL	2.95										
		Physical Collocation - Space Preparation - Common Systems Modifications-Caged, per cage			CLO	PE1SM	100.14										
		Physical Collocation - Space Preparation - Firm Order Processing			CLO	PE1SJ		1,204.00									
		Physical Collocation - Space Availability Report, per Central Office Requested	I		CLO	PE1SR		2,027.00									
	Power																
		Physical Collocation - Power, -48V DC Power - per Fused Amp Requested			CLO	PE1PL	8.87										
		Physical Collocation - Power, 120V AC Power, Single Phase, per Breaker Amp			CLO	PE1FB	5.60										
		Physical Collocation - Power, 240V AC Power, Single Phase, per Breaker Amp			CLO	PE1FD	11.22										
		Physical Collocation - Power, 120V AC Power, Three Phase, per Breaker Amp			CLO	PE1FE	16.82										
		Physical Collocation - Power, 277V AC Power, Three Phase, per Breaker Amp			CLO	PE1FG	38.84										
	Cross Connects (Cross Connects, Co-Carrier Cross Connects, and Ports)																
		Physical Collocation - 2-wire cross-connect, loop, provisioning			UEANL,UEQ, UNCNX, UEA, UCL, UAL, UHL, UDN, UNCVX	PE1P2	0.033	33.82	31.92								
		Physical Collocation - 4-wire cross-connect, loop, provisioning			UEA, UHL, UNCVX, UNCDX, UCL, UDL	PE1P4	0.066	33.94	31.95								
		Physical Collocation -DS1 Cross-Connect for Physical Collocation, provisioning			WDS1L, WDS1S, UXTD1, ULDD1, USLEL, UNLD1, U1TD1, UNC1X, UEPSR, UEPSB, UEPSE, UEPSP, USL, UEPEX, UEPDX	PE1P1	1.51	53.27	40.16								
		Physical Collocation - DS3 Cross-Connect, provisioning			UE3, U1TD3, UXTD3, UXTS1, UNC3X, UNCSX, ULDD3, U1TS1, ULDS1, UNLD3, UEPEX, UEPDX, UEPSR, UEPSB, UEPSE, UEPSP	PE1P3	19.26	52.37	38.89								

COLLOCATION - Tennessee

Att: 4 Exh: B

CATEGORY	RATE ELEMENTS	Interim	Zone	BCS	USOC	RATES($) Rec	Nonrecurring First	Nonrecurring Add'l	Nonrecurring Disconnect First	Nonrecurring Disconnect Add'l	Svc Order Submitted Elec per LSR	Svc Order Submitted Manually per LSR	Incremental Charge - Manual Svc Order vs. Electronic- 1st	Incremental Charge - Manual Svc Order vs. Electronic- Add'l	Incremental Charge - Manual Svc Order vs. Electronic- Disc 1st	Incremental Charge - Manual Svc Order vs. Electronic- Disc Add'l
											OSS Rates($)					
							First	Add'l	First	Add'l	SOMEC	SOMAN	SOMAN	SOMAN	SOMAN	SOMAN
	Physical Collocation - 2-Fiber Cross-Connect			CLO, ULDO3, ULD12, ULD48, U1TO3, U1T12, U1T48, UDLO3, UDL12, UDF	PE1F2	15.64	41.56	29.82	12.96	10.34			2.69	2.69	1.56	1.56
	Physical Collocation - 4-Fiber Cross-Connect			ULDO3, ULD12, ULD48, U1TO3, U1T12, U1T48, UDLO3, UDL12, UDF, UDFCX	PE1F4	28.11	50.53	38.78	16.97	14.35			2.69	2.69	1.56	1.56
	Physical Collocation - Co-Carrier Cross Connects/Direct Connect - Fiber Cable Support Structure, per linear foot, per cable.			CLO	PE1ES	0.0013										
	Physical Collocation - Co-Carrier Cross Connect/Direct Connect - Copper/Coax Cable Support Structure, per linear foot, per cable.			CLO	PE1DS	0.0019										
	Physical Collocation 2-Wire Cross Connect, Port			UEPSR, UEPSP, UEPSE, UEPSB, UEPSX, UEP2C	PE1R2	0.033	33.82	31.92					20.35	10.54	13.32	1.40
	Physical Collocation 4-Wire Cross Connect, Port			UEPEX, UEPDD	PE1R4	0.066	33.94	31.95					20.35	10.54	13.32	1.40
Security																
	Physical Collocation - Security Escort for Basic Time - normally scheduled work, per half hour			CLO	PE1BT		33.91	21.49								
	Physical Collocation - Security Escort for Overtime - outside of normally scheduled working hours on a scheduled work day, per half hour			CLO	PE1OT		44.17	27.76								
	Physical Collocation - Security Escort for Premium Time - outside of scheduled work day, per half hour			CLO	PE1PT		54.42	34.02								
	Physical Collocation - Security Access System - Security System per Central Office			CLO	PE1AX	55.99										
	Physical Collocation -Security Access System - New Card Activation, per Card Activation (First), per State			CLO	PE1A1	0.059	55.67									
	Physical Collocation-Security Access System-Administrative Change, existing Access Card, per Request, per State, per Card			CLO	PE1AA		15.61									
	Physical Collocation - Security Access System - Replace Lost or Stolen Card, per Card			CLO	PE1AR		45.64									
	Physical Collocation - Security Access - Initial Key, per Key			CLO	PE1AK		26.24									
	Physical Collocation - Security Access - Key, Replace Lost or Stolen Key, per Key			CLO	PE1AL		26.24									
CFA																
	Physical Collocation - CFA Information Resend Request, per premises, per arrangement, per request			CLO	PE1C9		77.67									
Cable Records																
	Physical Collocation - Cable Records, per request			CLO	PE1CR		1,711.00									
	Physical Collocation, Cable Records, VG/DS0 Cable, per cable record (maximum 3600 records)			CLO	PE1CD		925.06									
	Physical Collocation, Cable Records, VG/DS0 Cable, per each 100 pair			CLO	PE1CO		18.05									
	Physical Collocation, Cable Records, DS1, per T1 TIE			CLO	PE1C1		8.45									
	Physical Collocation, Cable Records, DS3, per T3 TIE			CLO	PE1C3		29.57									
	Physical Collocation - Cable Records, Fiber Cable, per cable record (maximum 99 records)			CLO	PE1CB		279.42									
	Physical Collocation, Cable Records,CAT5/RJ45			CLO	PE1C5		8.45									
Virtual to Physical																
	Physical Collocation - Virtual to Physical Collocation Relocation, per Voice Grade Circuit			CLO	PE1BV		33.00									
	Physical Collocation - Virtual to Physical Collocation Relocation, per DSO Circuit			CLO	PE1BO		33.00									
	Physical Collocation - Virtual to Physical Collocation Relocation, per DS1 Circuit			CLO	PE1B1		52.00									
	Physical Collocation - Virtual to Physical Collocation Relocation, per DS3 Circuit			CLO	PE1B3		52.00									

COLLOCATION - Tennessee

Att: 4 Exh: B

CATEGORY	RATE ELEMENTS	Interim	Zone	BCS	USOC	RATES($) Rec	Nonrecurring First	Nonrecurring Add'l	Nonrecurring Disconnect First	Nonrecurring Disconnect Add'l	Svc Order Submitted Elec per LSR	Svc Order Submitted Manually per LSR	Incremental Charge - Manual Svc Order vs. Electronic- 1st	Incremental Charge - Manual Svc Order vs. Electronic- Add'l	Incremental Charge - Manual Svc Order vs. Electronic- Disc 1st	Incremental Charge - Manual Svc Order vs. Electronic- Disc Add'l
											OSS Rates($)					
							First	Add'l	First	Add'l	SOMEC	SOMAN	SOMAN	SOMAN	SOMAN	SOMAN
	Physical Collocation - Virtual to Physical Collocation In-Place, Per Voice Grade Circuit			CLO	PE1BR		21.11									
	Physical Collocation Virtual to Physical Collocation In-Place, Per DSO Circuit			CLO	PE1BP		21.11									
	Physical Collocation - Virtual to Physical Collocation In-Place, Per DS1 Circuit			CLO	PE1BS		30.69									
	Physical Collocation - Virtual to Physical Collocation In-Place, per DS3 Circuit			CLO	PE1BE		30.69									
Entrance Cable																
	Physical Collocation - Fiber Cable Support Structure, per Entrance Cable			CLO	PE1PM	19.80										
	Physical Collocation - Fiber Entrance Cable per Cable (CO manhole to vault splice)			CLO	PE1EC		1,071.00		43.10							
	Physical Collocation - Fiber Entrance Cable Installation, per Fiber			CLO	PE1ED		7.29									
VIRTUAL COLLOCATION																
Application																
	Virtual Collocation - Application Fee			AMTFS	EAF		2,633.00						2.07	2.81	0.67	1.41
	Virtual Collocation - Co-Carrier Cross Connects/Direct Connect, Application Fee, per application			AMTFS	VE1CA		585.09									
	Virtual Collocation Administrative Only - Application Fee			AMTFS	VE1AF		743.25									
Space Preparation																
	Virtual Collocation - Floor Space, per sq. ft.			AMTFS	ESPVX	3.91										
Power																
	Virtual Collocation - Power, per fused amp			AMTFS	ESPAX	6.79										
Cross Connects (Cross Connects, Co-Carrier Cross Connects, and Ports)																
	Virtual Collocation - 2-wire cross-connect, loop, provisioning			UEANL, UEA, UDN, UAL, UHL, UCL, UEQ, UNCVX, UNCDX, UNCNX	UEAC2	0.57	11.62	9.90	10.38	8.66			2.07	2.81	0.67	1.41
	Virtual Collocation - 4-wire cross-connect, loop, provisioning			UEA, UHL, UCL, UDL, UNCVX, UNCDX	UEAC4	0.57	11.81	10.04	10.44	8.67			2.07	2.81	0.67	1.41
	Virtual collocation - Special Access & UNE, cross-connect per DS1			ULR, UXTD1, UNC1X, ULDD1, U1TD1, USLEL, UNLD1, USL, UEPEX, UEPDX	CNC1X	1.32	32.22	17.76	10.46	8.75			2.07	2.81	0.67	1.41
	Virtual collocation - Special Acess & UNE, cross-connect per DS3			USL, UE3, U1TD3, UXTS1, UXTD3, UNC3X, UNCSX, ULDD3, U1TS1, ULDS1, UDLSX, UNLD3, XDEST	CND3X	12.32	29.97	16.30	12.03	8.99			2.07	2.81	0.67	1.41
	Virtual Collocation - 2-Fiber Cross Connects			UDL12, UDLO3, U1T48, U1T12, U1TO3, ULDO3, ULD12, ULD48, UDF	CNC2F	3.03	41.56	29.82	12.96	10.34			2.69	2.69	1.56	1.56
	Virtual Collocation - 4-Fiber Cross Connects			UDL12, UDLO3, U1T48, U1T12, U1TO3, ULDO3, ULD12, ULD48, UDF	CNC4F	6.06	50.53	38.78	16.97	14.35			2.69	2.69	1.56	1.56
	Virtual Collocation - Co-Carrier Cross Connects/Direct Connect - Fiber Cable Support Structure, per linear foot, per cable			AMTFS	VE1CB	0.0013										
	Virtual Collocation - Co-Carrier Cross Connects/Direct Connect - Copper/Coax Cable Support Structure, per linear foot, per cable			AMTFS	VE1CD	0.0019										
	Virtual Collocation 2-Wire Cross Connect, Port			UEPSX, UEPSB, UEPSE, UEPSP, UEPSR, UEP2C	VE1R2	0.57	11.62	9.90	10.38	8.66			20.35	10.54	13.32	1.40
	Virtual Collocation 4-Wire Cross Connect, Port			UEPDD, UEPEX	VE1R4	0.57	11.81	10.04	10.44	8.67			20.35	10.54	13.32	1.40

COLLOCATION - Tennessee																	Att: 4 Exh: B
CATEGORY	RATE ELEMENTS	Interim	Zone	BCS	USOC	RATES($)					Svc Order Submitted Elec per LSR	Svc Order Submitted Manually per LSR	Incremental Charge - Manual Svc Order vs. Electronic-1st	Incremental Charge - Manual Svc Order vs. Electronic-Add'l	Incremental Charge - Manual Svc Order vs. Electronic-Disc 1st	Incremental Charge - Manual Svc Order vs. Electronic-Disc Add'l
						Rec	Nonrecurring		Nonrecurring Disconnect		OSS Rates($)					
							First	Add'l	First	Add'l	SOMEC	SOMAN	SOMAN	SOMAN	SOMAN	SOMAN
CFA																
	Virtual Collocation - CFA Information Resend Request, per Premises, per Arrangement, per request			AMTFS	VE1QR		77.67									
Cable Records																
	Virtual Collocation Cable Records - per request			AMTFS	VE1BA		1,711.00									
	Virtual Collocation Cable Records - VG/DS0 Cable, per cable record			AMTFS	VE1BB		925.06									
	Virtual Collocation Cable Records - VG/DS0 Cable, per each 100 pair			AMTFS	VE1BC		18.05									
	Virtual Collocation Cable Records - DS1, per T1TIE			AMTFS	VE1BD		8.45									
	Virtual Collocation Cable Records - DS3, per T3TIE			AMTFS	VE1BE		29.57									
	Virtual Collocation Cable Records - Fiber Cable, per 99 fiber records			AMTFS	VE1BF		279.42									
	Virtual Collocation Cable Records - CAT 5/RJ45			AMTFS	VE1B5		8.45									
Security																
	Virtual collocation - Security escort, basic time, normally scheduled work hours			AMTFS	SPTBX		33.15	20.44					2.07	2.81	0.67	1.41
	Virtual collocation - Security escort, overtime, outside of normally scheduled work hours on a normal working day			AMTFS	SPTOX		41.50	25.61					2.07	2.81	0.67	1.41
	Virtual collocation - Security escort, premium time, outside of a scheduled work day			AMTFS	SPTPX		49.86	30.79					2.07	2.81	0.67	1.41
Maintenance																
	Virtual collocation - Maintenance in CO - Basic, per half hour			AMTFS	CTRLX		30.64						2.07	2.81	0.67	1.41
	Virtual collocation - Maintenance in CO - Overtime, per half hour			AMTFS	SPTOM		35.77						2.07	2.81	0.67	1.41
	Virtual collocation - Maintenance in CO - Premium per half hour			AMTFS	SPTPM		40.90						2.07	2.81	0.67	1.41
Entrance Cable																
	Virtual Collocation - Cable Installation Charge, per cable			AMTFS	ESPCX		1,749.00						2.07	2.81	0.67	1.41
	Virtual Collocation - Cable Support Structure, per cable			AMTFS	ESPSX	17.87										
COLLOCATION IN THE REMOTE SITE																
Physical Remote Site Collocation																
	Physical Collocation in the Remote Site - Application Fee			CLORS	PE1RA		580.20		312.76							
	Cabinet Space in the Remote Site per Bay/ Rack			CLORS	PE1RB	220.41										
	Physical Collocation in the Remote Site - Security Access - Key			CLORS	PE1RD		24.69									
	Physical Collocation in the Remote Site - Space Availability Report per Premises Requested			CLORS	PE1SR		218.49									
	Physical Collocation in the Remote Site - Remote Site CLLI Code Request, per CLLI Code Requested			CLORS	PE1RE		70.81									
	Remote Site DLEC Data (BRSDD), per Compact Disk, per CO			CLORS	PE1RR		234.15									
	Physical Collocation - Security Escort for Basic Time - normally scheduled work, per half hour			CLORS	PE1BT		33.91	21.49								
	Physical Collocation - Security Escort for Overtime - outside of normally scheduled working hours on a scheduled work day, per half hour			CLORS	PE1OT		44.17	27.76								
	Physical Collocation - Security Escort for Premium Time - outside of scheduled work day, per half hour			CLORS	PE1PT		54.42	34.02								
Adjacent Remote Site Collocation																
	Remote Site-Adjacent Collocation-Application Fee			CLORS	PE1RU		755.62	755.62								
	Remote Site-Adjacent Collocation - Real Estate, per square foot			CLORS	PE1RT	0.134										
	Remote Site-Adjacent Collocation - AC Power, per breaker amp			CLORS	PE1RS	6.27										
NOTE: If Security Escort and/or Add'l Engineering Fees become necessary for adjacent remote site collocation, the Parties will negotiate appropriate rates.																
Virtual Remote Site Collocation																
	Virtual Collocation in the Remote Site - Application Fee			VE1RS	VE1RB		580.20		312.76							
	Virtual Collocation in the Remote Site - Per Bay/Rack of Space			VE1RS	VE1RC	220.41										
	Virtual Collocation in the Remote Site - Space Availability Report per Premises requested			VE1RS	VE1RR		218.49									
	Virtual Collocation in the Remote Site - Remote Site CLLI Code Request, per CLLI Code Requested			VE1RS	VE1RL		70.81									
ADJACENT COLLOCATION																

COLLOCATION - Tennessee																	Att: 4 Exh: B
CATEGORY		RATE ELEMENTS	Interim	Zone	BCS	USOC	RATES($)					Svc Order Submitted Elec per LSR	Svc Order Submitted Manually per LSR	Incremental Charge - Manual Svc Order vs. Electronic-1st	Incremental Charge - Manual Svc Order vs. Electronic-Add'l	Incremental Charge - Manual Svc Order vs. Electronic-Disc 1st	Incremental Charge - Manual Svc Order vs. Electronic-Disc Add'l
							Rec	Nonrecurring		Nonrecurring Disconnect		OSS Rates($)					
								First	Add'l	First	Add'l	SOMEC	SOMAN	SOMAN	SOMAN	SOMAN	SOMAN
		Adjacent Collocation - Space Charge per Sq. Ft.			CLOAC	PE1JA	0.0656										
		Adjacent Collocation - Electrical Facility Charge per Linear Ft.			CLOAC	PE1JC	5.53										
		Adjacent Collocation - 2-Wire Cross-Connects			UEANL,UEQ,UEA,UCL, UAL, UHL, UDN	PE1JE	0.34	11.12	10.18	11.33	10.23			1.77	1.77	1.12	1.12
		Adjacent Collocation - 4-Wire Cross-Connects			UEA,UHL,UDL,UCL	PE1JF	0.33	11.30	10.31	11.62	10.44			1.77	1.77	1.12	1.12
		Adjacent Collocation - DS1 Cross-Connects			USL	PE1JG	1.70	28.39	16.88	11.65	10.54			1.77	1.77	1.12	1.12
		Adjacent Collocation - DS3 Cross-Connects			UE3	PE1JH	19.03	26.23	15.51	13.40	10.77			1.77	1.77	1.12	1.12
		Adjacent Collocation - 2-Fiber Cross-Connect			CLOAC	PE1JJ	3.49	26.23	15.51	13.41	10.78			1.77	1.77	1.12	1.12
		Adjacent Collocation - 4-Fiber Cross-Connect			CLOAC	PE1JK	6.50	29.75	19.02	17.60	14.97			1.77	1.77	1.12	1.12
		Adjacent Collocation - Application Fee			CLOAC	PE1JB		2,973.00		0.95				0.00	0.00	0.00	0.00
		Adjacent Collocation - 120V, Single Phase Standby Power Rate per AC Breaker Amp			CLOAC	PE1JL	5.81										
		Adjacent Collocation - 240V, Single Phase Standby Power Rate per AC Breaker Amp			CLOAC	PE1JM	11.64										
		Adjacent Collocation - 120V, Three Phase Standby Power Rate per AC Breaker Amp			CLOAC	PE1JN	17.45										
		Adjacent Collocation - 277V, Three Phase Standby Power Rate per AC Breaker Amp			CLOAC	PE1JO	40.30										
	Note: Rates displaying an "I" in Interim column are interim as a result of a Commission order.																

Attachment 5

Access to Numbers and Number Portability

TABLE OF CONTENTS

1. Non-Discriminatory Access to Telephone Numbers 3

2. Local Number Portability 4

3. Service Order Charges..... 5

4. Wireless Local Number Portability (WLNP) 5

5. White Pages Listings……7

ACCESS TO NUMBERS AND NUMBER PORTABILITY

1. Non-Discriminatory Access to Telephone Numbers

1.1 During the term of this Agreement, where Sprint is utilizing its own switch, Sprint shall contact the North American Numbering Plan Administrator (NANPA), or, where applicable, the relevant Number Pool Administrator for the assignment of numbering resources.

1.2 Where AT&T provides local switching or resold services to Sprint CLEC, AT&T will provide Sprint CLEC with online access to available telephone numbers as defined by applicable FCC rules and regulations on a first come first served basis. Sprint CLEC acknowledges that such access to numbers shall be in accordance with the appropriate FCC rules and regulations. Sprint CLEC may designate up to a forecasted six (6) months supply of available numbers as intermediate (an available number provided to Sprint CLEC) telephone numbers per rate center if the following conditions are met.

1.2.1 Sprint CLEC must: (1) indicate that all of the intermediate numbers currently held by Sprint CLEC in each rate center where Sprint CLEC will be requesting intermediate telephone numbers have six (6) or less months to exhaust; (2) supply projected monthly telephone number demand on a rate center basis for the coming twelve (12) months for each rate center where Sprint CLEC will be requesting intermediate telephone numbers; and, (3) demonstrate that the utilization level on current intermediate numbers held by Sprint CLEC in the rate center where Sprint CLEC is requesting telephone numbers has reached at least seventy-five percent (75%).

1.2.2 The above information will be provided by Sprint CLEC by submitting to AT&T a fully completed "CO Code Assignments Months To Exhaust Certification Worksheet – TN Level" (MTE Worksheet), Appendix B to the Central Office Code (NXX) Assignments Guidelines, INC 95-0407-008 for each rate center where Sprint CLEC will be requesting intermediate telephone numbers. The utilization level is calculated by dividing all intermediate numbers currently assigned by Sprint CLEC to customers by the total number of intermediate numbers held by Sprint CLEC in the rate center and multiplying the result by one hundred (100).

1.2.3 If fulfilling Sprint CLEC's request for intermediate numbers results in AT&T having to submit a request for additional telephone numbers to a national numbering administrator (either NANPA CO Code Administration or NeuStar Pooling Administration or their successors), AT&T will submit the required numbering request to the national numbering administrator to satisfy Sprint CLEC's request for intermediate numbers. AT&T will also pursue all appropriate steps (including submitting a safety valve request (petition) to the appropriate Commission if the numbering request is denied by the national administrator) to satisfy Sprint CLEC's request for intermediate numbers. In these cases, AT&T is not obligated to fulfill

the request by Sprint CLEC for intermediate numbers unless, and until, AT&T's request for additional numbering resources is granted.

1.2.4 Sprint CLEC agrees to supply supporting information for any numbering request and/or safety valve request that AT&T files pursuant to Section 1.2.3 above.

1.2.5 Sprint CLEC acknowledges that there may be instances where there is an industry shortage of available telephone numbers in a number plan area (NPA). These instances occur where a jeopardy status has been declared by NANPA and the industry has determined that limiting the assignment of new numbers is the appropriate method to employ until the jeopardy can be alleviated. In such NPA jeopardy situations where assignment of new numbers is restricted per the jeopardy guidelines developed by the industry, AT&T may request that Sprint CLEC cancel all or a portion of its unassigned intermediate numbers. Sprint CLEC's consent to AT&T's request shall not be unreasonably withheld.

2. CLEC Local Number Portability

2.1 AT&T and Sprint CLEC will offer LNP in accordance with rules, regulations and guidelines adopted by the Commission, the FCC and industry fora.

2.2 Service Management System (SMS) Administration. AT&T and Sprint CLEC will work cooperatively with other local service providers to establish and maintain contracts for the LNP SMS.

2.3 Network Architecture. AT&T and Sprint CLEC agree to adhere to applicable FCC rules and orders governing LNP network architecture.

2.4 Signaling. In connection with LNP, each Party agrees to use SS7 signaling in accordance with applicable FCC rules and orders.

2.5 N-1 Query. AT&T and Sprint CLEC agree to adhere to applicable FCC rules and orders governing LNP N-1 queries.

2.6 Porting of Reserved Numbers and Suspended Lines. Customers of AT&T and Sprint CLEC may port numbers, via LNP, that are in a denied state or that are on suspend status. In addition, customers of AT&T and Sprint CLEC may port reserved numbers that the customer has paid to reserve. Portable reserved numbers are identified on the Customer Service Record (CSR). In anticipation of porting from one Party to the other Party, a Party's customer may reserve additional telephone numbers and include them with the numbers that are subsequently ported to the other Party. It is not necessary to restore a denied number before it is ported.

2.7 Splitting of Number Groups. AT&T and Sprint CLEC shall permit blocks of subscriber numbers (including, but not limited to, Direct Inward Dial (DID) numbers and MultiServ groups) to be split in connection with an LNP request. AT&T and Sprint CLEC shall permit customers who port a portion of DID numbers to retain DID service on the remaining portion of numbers. If a Party requests porting a range of DID numbers smaller than a whole block, that Party shall pay the applicable

OSS (i.e., SOMEC, SOMAN, SOMGA) charges for doing so as set forth in Attachment 2.

2.8 The Parties will set Location Routing Number (LRN) unconditional or ten (10) digit triggers where applicable. Where triggers are set, the porting Party will remove the ported number at the same time the trigger is removed.

2.9 A trigger order is a service order issued in advance of the porting of a number. A trigger order 1) initiates call queries to the AIN SS7 network in advance of the number being ported; and 2) provides for the new service provider to be in control of when a number ports.

2.10 Where triggers are not set, AT&T and Sprint CLEC shall coordinate the porting of the number between service providers so as to minimize service interruptions to the customer.

2.11 AT&T and Sprint CLEC will work cooperatively to implement changes to LNP process flows ordered by the FCC or as recommended by standard industry foras addressing LNP.

2.12 Where Sprint CLEC or AT&T performs an LNP query for the other Party, each shall pay the appropriate query charge as follows: i) AT&T shall bill and Sprint CLEC shall pay the query charge as set forth in Attachment 2; and ii) Sprint CLEC shall bill and AT&T shall pay the query charge listed in Sprint CLEC's Interstate Access Tariff. For Sprint to receive the LNP Query Service as set forth in Attachment 2, Sprint shall fill out and submit the Interconnection data sheet for AT&T LNP Query Service. The form can be obtained on AT&T's Interconnection Web site under AT&T LNP Query Service and click on forms. Once the form has been filled out and submitted the LNP Query charge will take effect on the approved date. This charge is not subject to the resale discount set forth in Attachment 1.

3. Service Order Charges

3.1 The terms, conditions and rates for OSS utilized in connection with LNP are as set forth in Attachment 6 and Exhibit A of Attachment 2.

4. Wireless Local Number Portability (WLNP)

4.1 Wireless Local Number Portability (WLNP) is a method by which a subscriber may change service providers and/or service but retain and transfer their local telephone number. FCC Report and Order 95-116 mandated the implementation of Local Number Portability - Service Provider Portability (LNP-SPP) for both Local Exchange Carriers (LEC) and Commercial Mobile Radio Services (CMRS) providers.

4.2 AT&T will provide Sprint PCS access to the Local Number Portability (LNP) database at the applicable OSS (i.e., SOMEC, SOMAN, SOMGA) charge and terms, and conditions as set forth on AT&T's Interconnection Web site:

http://interconnection.bellsouth.com/products_and_services/wireless/wlnp/rtc.html

4.3 Where Sprint CMRS or AT&T performs an LNP query for the other Party, each shall pay the appropriate query charge as follows: i) AT&T shall bill and Sprint PCS shall pay the query charge as set forth in Attachment 2; and ii) Sprint PCS shall bill and AT&T shall pay the query charge of $.02896**.**

5 White Pages Listings

5.1 AT&T shall provide Sprint and its end users access to white pages directory listings under the following terms:

5.1.1 Listings. Sprint shall provide all new, changed and deleted listings on a timely basis and AT&T or its agent will include Sprint end user residential and business listings in the appropriate White Pages (residential and business) or alphabetical directories in the geographic areas covered by this Agreement. Directory listings will make no distinction between Sprint and AT&T customers. Sprint shall provide listing information in accordance with the procedures set forth in The AT&T Business Rules for Local Ordering found at AT&T's Interconnection Services Web site.

5.1.1 Non-Listed (Semi-Private)/Non-Published (Private) Customers. Sprint will be required to provide to AT&T the names, addresses and telephone numbers of all Sprint customers who wish to have Non-Listed or Non-Published listings.. Listings will be subject to the rates as set forth in AT&T's GSST and shall not be subject to the wholesale discount. To the extent Sprint does not wish to have its customer's listing Listed, Non-Listed, or Non-Published, Sprint may remove such listing from AT&T's database via the industry standard process using the LSR.

5.1.2 Inclusion of Sprint Customers in Directory Assistance (DA) Database. AT&T will include and maintain Sprint customer listings, as requested, in AT&T's DA databases. Sprint shall provide such DA listings to AT&T at no charge.

5.1.3 Listing Information Confidentiality. AT&T will afford Sprint's directory listing information the same level of confidentiality that AT&T affords its own directory listing information.

5.1.4 Additional and Designer Listings. Additional and designer listings will be offered by AT&T at tariffed rates as set forth in AT&T's GSST and shall not be subject to the wholesale discount.

5.1.5 Rates. So long as Sprint provides listing information to AT&T as set forth in Section 5.1.2 above, AT&T shall provide to Sprint one (1) basic White Pages directory listing per Sprint customer at no charge other than the manual service order charge or the electronic service order charge, as appropriate, as described in Attachment 6.

5.2 Directories. AT&T or its agent shall make available White Pages directories to Sprint customer at no charge or as specified in a separate agreement between Sprint

and AT&T's agent.

5.3 Procedures for submitting Sprint Subscriber Listing Information (SLI) are found in The AT&T Business Rules for Local Ordering found at AT&T's Interconnection Services Web site.

5.3.1 Sprint authorizes AT&T to release all Sprint SLI provided to AT&T by Sprint to qualifying third parties pursuant to either a license agreement or AT&T's Directory Publishers Database Service (DPDS) in AT&T's GSST. Such Sprint SLI shall be intermingled with AT&T's own customer listings and listings of any other CLEC that has authorized a similar release of SLI.

5.3.2 No compensation shall be paid to Sprint for AT&T's receipt of Sprint's SLI, or for the subsequent release to third parties of such SLI. In addition, to the extent AT&T incurs costs to modify its systems to enable the release of Sprint's SLI or costs on an ongoing basis to administer the release of Sprint's SLI, Sprint shall pay to AT&T its proportionate share of the reasonable costs associated therewith. At any time that costs may be incurred to administer the release of Sprint's SLI, Sprint will be notified. If Sprint does not wish to pay its proportionate share of these reasonable costs, Sprint may instruct AT&T that is does not wish to release its SLI to independent publishers, and Sprint shall amend this Agreement accordingly. Sprint will be liable for all costs incurred until the effective date of the amendment.

5.3.3 Neither AT&T nor any agent shall be liable for the content or accuracy of any SLI provided by Sprint under this Agreement. Sprint shall indemnify, except to the extent caused by AT&T's gross negligence or willful misconduct, hold harmless and defend AT&T and its agents from and against any damages, losses, liabilities, demands, claims, suits, judgments, costs and expenses (including but not limited to reasonable attorneys' fees and expenses) arising from AT&T's Tariff obligations or otherwise and resulting from or arising out of any third party's claim of inaccurate Sprint listings or use of the SLI provided pursuant to this Agreement. AT&T may forward to Sprint any complaints received by AT&T relating to the accuracy or quality of Sprint listings.

5.3.4 Listings and subsequent updates will be released consistent with AT&T system changes and/or update scheduling requirements.

Attachment 6

Pre-Ordering, Ordering, Provisioning, Maintenance and Repair

TABLE OF CONTENTS

1. Quality of Pre-Ordering, Ordering, Provisioning, Maintenance and Repair 3

2. Access to Operations Support Systems 3

3. Miscellaneous 8

PRE-ORDERING, ORDERING, PROVISIONING, MAINTENANCE AND REPAIR

1. Quality of Pre-Ordering, Ordering, Provisioning, Maintenance and Repair

1.1 AT&T shall provide to Sprint nondiscriminatory access to its OSS and the necessary information contained therein in order that Sprint can perform the functions of pre-ordering, ordering, provisioning, maintenance and repair, and billing. AT&T shall provide Sprint with all relevant documentation (manuals, user guides, specifications, etc.) regarding business rules and other formatting information as well as practices and procedures necessary to ensure requests are efficiently processed. All documentation will be readily accessible at AT&T's Interconnection Web site. AT&T shall ensure that its OSS are designed to accommodate requests for both current and projected demands of Sprint and other CLECs in the aggregate.

2. Access to Operations Support Systems

2.1 AT&T shall provide nondiscriminatory access to the OSS through manual and/or electronic interfaces as described in this Attachment. It is the sole responsibility of Sprint to obtain the technical capability to access and utilize AT&T's OSS interfaces. Specifications for Sprint's access and use of AT&T's electronic interfaces are set forth at AT&T's Interconnection Web site.

2.1.1 Sprint Agrees to comply with the provisions of the OSS Interconnection Volume Guidelines as set forth at AT&T's Interconnection Web site.

2.2 <u>Pre-Ordering</u>

2.2.1 AT&T will provide electronic access to its OSS and the information contained therein in order that Sprint can perform the following pre-ordering functions: service address validation, telephone number selection, service and feature availability, due date information, customer record information and loop makeup information. Mechanized access is provided by electronic interfaces whose specifications for access and use are set forth at AT&T's Interconnection Web site. The process by which the Parties will manage these electronic interfaces to include the development and introduction of new interfaces will be governed by the change management process as described in Section 2.7 below.

2.2.2 AT&T shall provide to Sprint electronic access to customer service record information in accordance with the applicable performance intervals referenced in Attachment 9. Such access shall include access for resold customers that Sprint has acquired as its own customer and has obtained a valid LOA from such customer authorizing Sprint to access the customer's information. If electronic

access is not available, AT&T shall provide to Sprint such information within twenty-four (24) hours. Sprint shall provide to AT&T access to customer record information, including circuit numbers associated with each telephone number where applicable. Sprint shall use commercially reasonable efforts to provide such customer service record information within forty-eight (48) hours of a valid request, exclusive of Saturdays, Sundays and holidays. In the event Sprint develops electronic access during the term of this Agreement, the Parties shall negotiate in good faith to establish an interval for the provision of such information. In the event the Parties are unable to agree upon an interval, either Party may pursue Dispute Resolution in accordance with the General Terms and Conditions of this Agreement.

2.2.3 The Parties agree not to view, copy, or otherwise obtain access to the customer record information of any customer without that customer's permission. The Parties will obtain access to customer record information only in strict compliance with applicable federal and state laws, rules, or regulations regarding such access. If either Party has a reasonable belief that the other Party may not be accessing customer record information in accordance with such laws, rules, and regulations, then the alleging Party may take action in accordance with General Terms and Conditions, Sections 3.5.2 and 3.5.3, pertaining to Unauthorized Use of Facilities or Services.

2.3 Ordering

2.3.1 AT&T will make available to Sprint electronic interfaces for the purpose of ‘exchanging order information, including order status and completion notification, for non-complex and certain complex resale requests and certain network elements. Specifications for access and use of AT&T’s electronic interfaces are set forth at AT&T’s Interconnection Web site. The process by which the Parties will manage these electronic interfaces to include the development and introduction of new interfaces will be governed by the change management process as described in Section 2.7 below.

2.3.2 Sprint shall place orders for services by submitting a LSR to AT&T. AT&T shall bill Sprint an electronic service order charge at the rate set forth in the applicable Attachment to this Agreement for each LSR submitted by means of an electronic interface. AT&T shall bill Sprint a manual service order charge at the rate set forth in the applicable Attachment to this Agreement for each LSR submitted by means other than the electronic Interfaces (e.g., mail, fax, courier, etc.). An individual LSR will be identified for billing purposes by its PON. AT&T shall bill Sprint OSS rates pursuant to the terms, conditions and rates for OSS as set forth in Exhibit A of Attachment 2. Sprint shall bill AT&T a single manual OSS charge per LSR associated with the “port back” of a telephone number to AT&T at a rate no higher than as set forth in Exhibit A of Attachment 2 until such time as electronic ordering is provided by Sprint to AT&T. When Sprint has the capability

of electronic ordering, the electronic OSS charge set forth in Exhibit A to Attachment 2 will apply or the Parties will agree to negotiate such a rate at that time. In the event the Parties enter into negotiating an electronic ordering rate, the Parties agree to use the electronic OSS charges set forth in Exhibit A to Attachment 2 until such time as the Parties mutually agree on an alternative rate.

2.3.2.1 Sprint may submit an LSR to request that a customer's service be temporarily suspended, denied, or restored. Alternatively, Sprint may submit a list of such customers if Sprint provides a separate PON for each location on the list. AT&T will bill an electronic or manual service order charge for each location.

2.3.2.2 AT&T will bill the electronic or manual service order charge, as applicable, for an LSR, regardless of whether that LSR is later supplemented, clarified or cancelled. .

2.3.2.3 Notwithstanding the foregoing, AT&T will not bill an additional electronic or manual service order charge for supplements to any LSR submitted to clarify, correct, change or cancel a previously submitted LSR per PON.

2.3.2.4 AT&T shall return a Firm Order Confirmation (FOC) or LSR clarification in accordance with the applicable performance intervals referenced in Attachment 9. Sprint shall use commercially reasonable efforts to provide to AT&T a FOC within forty-eight (48) hours of the receipt from AT&T of a complete and accurate LSR, exclusive of Saturdays, Sundays and holidays. Sprint shall use commercially reasonable efforts to provide to AT&T an LSR clarification within forty-eight (48) hours of the receipt from AT&T of an incomplete and inaccurate LSR, exclusive of Saturdays, Sundays and holidays. . In the event Sprint develops electronic access during the term of this Agreement, the Parties shall negotiate in good faith to establish an interval for the provision of such information. In the event the Parties are unable to agree upon an interval, either Party may pursue Dispute Resolution in accordance with the General Terms and Conditions of this Agreement.

2.4 <u>Provisioning</u>

2.4.1 AT&T shall provision services during its regular working hours. To the extent Sprint requests provisioning of service to be performed outside AT&T's regular working hours, or the work so requested requires AT&T's technicians or project managers to work outside of regular working hours, overtime charges set forth in AT&T's intrastate Access Services Tariff, Section E13.2, shall apply. Notwithstanding the foregoing, if such work is performed outside of regular working hours by a AT&T technician or project manager during his or her scheduled shift and AT&T does not incur any overtime charges in performing the work on behalf of Sprint, AT&T will not assess Sprint additional charges beyond the rates and charges specified in this Agreement.

2.4.2 In the event AT&T must dispatch to the customer's location more than once due to incorrect or incomplete information provided by Sprint (e.g., incomplete address, incorrect contact name/number, etc.), AT&T will bill Sprint for each additional dispatch required to provision the circuit due to the incorrect/incomplete information provided. AT&T will assess the applicable Maintenance of Service rates from BellSouth's FCC No. 1 Tariff, Section 13.3.1.

2.4.3 Cancellation Charges. If Sprint cancels an LSR for network elements or resold services subsequent to AT&T's generation of a service order, any costs incurred by AT&T in conjunction with provisioning of Services as requested on the cancelled LSR will be recovered in accordance with the cancellation methodology set forth in the Cancellation Charge Percentage Chart found on AT&T's Interconnection Web site. In addition, AT&T reserves the right to assess cancellation charges if Sprint fails to respond within nine (9) business days to a Missed Appointment order notification.

2.4.3.1 Notwithstanding the foregoing, if Sprint places an LSR based upon AT&T's loop makeup information, and such information is inaccurate resulting in the inability of AT&T to provision the network elements requested and another spare compatible facility cannot be found with the transmission characteristics of the network elements originally requested, cancellation charges described in this Section shall not apply. Where Sprint places a single LSR for multiple network elements or services based upon loop makeup information, and information as to some, but not all, of the network elements or services is inaccurate, if AT&T cannot provision the network elements or services that were the subject of the inaccurate loop makeup information, Sprint may cancel its request for those network elements or services without incurring cancellation charges as described in this Section. In such instance, should Sprint elect to cancel the entire LSR, cancellation charges as described in this Section shall apply to those elements and services that were not the subject of inaccurate loop makeup.

2.4.4 Service Date Advancement Charges (Expedites). For Service Date Advancement requests by Sprint, Service Date Advancement charges will apply for intervals less than the standard interval as outlined in the AT&T Product and Services Interval Guide. The charges are as set forth in Exhibit A of Attachment 2.

2.4.5 Order Modification Charges. If Sprint modifies an order after being sent a FOC from AT&T, the Order Modification Charge (OMC) or Order Modification Charge Additional Dispatch (OMCAD) will be paid by Sprint in accordance with Exhibit A of Attachment 2.

2.5 Maintenance and Repair

2.5.1 AT&T will make available to Sprint electronic interfaces for the purpose of reporting and monitoring service troubles. Specifications for access and use of

AT&T's maintenance and repair electronic interfaces are set forth at AT&T's Interconnection Web site. The process by which the Parties will manage these electronic interfaces to include the development and introduction of new interfaces will be governed by the change management process as described in Section 2.7 below. Requests for trouble repair are billed in accordance with the provisions of this Agreement. AT&T and Sprint agree to adhere to AT&T's Operational Understanding. The Operational Understanding may be accessed via AT&T's Interconnection Web site.

2.5.2 If Sprint reports a trouble on a AT&T Network Element and no trouble is found in AT&T's network, AT&T will charge Sprint a Maintenance of Service Charge for any dispatching and testing (both inside and outside the CO) required by AT&T in order to confirm the working status. AT&T will assess the Maintenance of Service rates as set forth in BellSouth's FCC No. 1 Tariff, Section 13.3.1.

2.5.2.1 In the event AT&T must dispatch to the customer's location more than once due to incorrect or incomplete information provided by Sprint (e.g., incomplete address, incorrect contact name/number, etc.), AT&T will bill Sprint for each additional dispatch required to repair the circuit due to the incorrect/incomplete information provided. AT&T will assess the Maintenance of Service rates as set forth in BellSouth's FCC No. 1 Tariff, Section 13.3.1.

2.5.3 If Sprint reports a trouble on a resold service and no trouble is found in AT&T's network, AT&T will charge Sprint a Trouble Determination Charge or Trouble Location Charge for any dispatching and testing (both inside and outside the CO) required by AT&T in order to confirm the working status. AT&T will assess the Trouble Determination Charge or Trouble Location Charge from the applicable AT&T tariff.

2.5.3.1 In the event AT&T must dispatch to the customer's location more than once due to incorrect or incomplete information provided by Sprint (e.g., incomplete address, incorrect contact name/number, etc.), AT&T will bill Sprint for each additional dispatch required to repair the circuit due to the incorrect/incomplete information provided. AT&T will assess the Trouble Determination Charge or Trouble Location Charge from the applicable AT&T tariff.

2.6 Billing. AT&T will provide Sprint nondiscriminatory access to billing information as specified in Attachment 7.

2.7 Change Management**.** The Parties agree that the AT&T established collaborative change management process known as the Change Control Process (CCP) will be used to manage changes to existing interfaces, introduction of new interfaces and retirement of interfaces. The Parties agree to comply with the provisions of the documented CCP as may be amended from time to time and incorporated herein by reference. The change management process will cover changes to AT&T's

electronic interfaces, AT&T's testing environment, associated manual process improvements, and relevant documentation. The Parties agree that the change management process as it relates to ATIS and ANSI standards will be utilized. The process will define a procedure for resolution of change management disputes. Documentation of the CCP as well as related information and processes will be clearly organized and readily accessible to Sprint at AT&T's Interconnection Web site.

2.8 Rates. Unless otherwise specified herein, charges for the use of AT&T's OSS, and other charges applicable to pre-ordering, ordering, provisioning and maintenance and repair, shall be at the rates set forth in the applicable Attachment of this Agreement.

2.9 The Commissions in some states have ordered per element manual additive nonrecurring charges for Network Elements and Other Services ordered by means other than one of the interactive interfaces. These ordered Network Elements and Other Services manual additive nonrecurring charges will apply in these states, rather than the charge per LSR. The per element charges are listed in Exhibit A of Attachment 2.

3. Miscellaneous

3.1 Pending Orders. To the extent that a Party submits an LSR with incomplete, incorrect or conflicting information, the other Party will return the LSR to the submitting Party for clarification. The submitting Party shall respond to the request for clarification within thirty (30) days by submitting a supplemental LSR. If the Party submitting the LSR does not submit a supplement LSR within thirty (30) days, the other Party will cancel the original LSR and the submitting Party shall be required to submit a new LSR, with a new PON.

3.2 Single Point of Contact. Sprint will be the single point of contact with AT&T for ordering activity for network elements and other services used by Sprint to provide services to its customers, except that AT&T may accept a request directly from another CLEC, or AT&T, acting with authorization of the affected customer. Sprint and AT&T shall each execute a blanket LOA with respect to customer requests so that prior proof of customer authorization will not be necessary with every request (except in the case of a local service freeze). The Parties shall each be entitled to adopt their own internal processes for verification of customer authorization for requests, provided, however, that such processes shall comply with applicable state and federal law and industry and regulatory guidelines. Pursuant to a request from another carrier, AT&T may disconnect any network element being used by Sprint to provide service to that customer and may reuse such network elements or facilities to enable such other carrier to provide service to the customer. AT&T will notify Sprint that such a request has been processed but will not be required to notify Sprint in advance of such processing.

3.2.1 Neither Party shall prevent or delay a customer from migrating to another carrier because of unpaid bills, denied service, or contract terms.

3.2.2 Use of Facilities. When a customer of Sprint elects to discontinue service and to transfer service to another local exchange carrier, including AT&T, AT&T shall have the right to reuse the facilities provided to Sprint by AT&T. In addition, where AT&T provides local switching, AT&T may disconnect and reuse facilities when the facility is in a denied state and AT&T has received a request to establish new service or transfer service from a customer or from a CLEC. AT&T will notify Sprint that such a request has been processed after the disconnect order has been completed.

3.3 Contact Numbers. The Parties agree to provide one another with toll-free nation-wide (50 states) contact numbers for the purpose of ordering, provisioning and maintenance of services. Contact numbers for maintenance/repair of services shall be staffed twenty-four (24) hours per day, seven (7) days per week. AT&T will close trouble tickets after making a reasonable effort to contact Sprint for authorization to close a ticket. AT&T will place trouble tickets in delayed maintenance status after making a reasonable effort to contact Sprint to request additional information or to request authorization for additional work deemed necessary by AT&T.

3.4 Subscription Functions. In cases where AT&T performs subscription functions for an IXC (i.e., PIC and LPIC changes via Customer Account Record Exchange (CARE)), AT&T will in all possible instances provide the affected IXCs with the OCN of the local provider for the purpose of obtaining customer billing account and other customer information required under subscription requirements.

3.4.1 When Sprint's customer, served by resale or loop and port combinations, changes its PIC or LPIC, and per AT&T/BellSouth's FCC or state tariff the interexchange carrier elects to charge the customer the PIC or LPIC change charge, AT&T will bill the PIC or LPIC change charge to Sprint, which has the billing relationship with that customer, and Sprint may pass such charge to the customer.

Attachment 7

Billing

TABLE OF CONTENTS

1. Payment and Billing Arrangements 3

2. Billing Disputes 10

3. RAO Hosting 11

BILLING

1. Payment and Billing Arrangements

The terms and conditions set forth in this Attachment shall apply to all services ordered and provisioned pursuant to this Agreement.

1.1 AT&T will bill through the Carrier Access Billing System (CABS), Integrated Billing System (IBS) and/or the Customer Records Information Systems (CRIS) depending on the particular service(s) provided to Sprint under this Agreement. AT&T will format all bills in CABS Billing Output Specification (CBOS) Standard or CLUB/EDI format, depending on the type of service provided. For those services where standards have not yet been developed, AT&T's billing format may change in accordance with applicable industry standards.

1.1.1 For any service(s) AT&T receives from Sprint, Sprint shall bill AT&T in BOS and OBF industry standard format.

1.1.2 Any switched access charges associated with interexchange carrier access to the resold local exchange lines will be billed by, and due to AT&T.

1.1.3 The billing Party will render bills each month on established bill days for each of the billed Party's accounts. If either Party requests multiple billing media or additional copies of the bills, the billing Party will provide these at the rates set forth in BellSouth's FCC No. 1 Tariff, Section 13.3.6.3, except for resold services which shall be at the rates set forth in AT&T's Non-Regulated Services Pricing List N6. AT&T will work with the appropriate Sprint person to determine if all the required information is passed electronically in a standard and useable format. If both Parties agree that the pertinent information is present in the electronic version, then AT&T, after ninety (90) days, will commence billing Sprint if paper is needed as a second medium, but AT&T will not charge Sprint for infrequent requests for paper.

1.1.4 The billing Party will bill in advance for all services to be provided during the ensuing billing period except charges associated with service usage and nonrecurring charges, which will be billed in arrears. Each Party will not be liable for any charges that may become due pursuant to this Agreement if the other Party does not invoice them within twelve (12) months after the date in which the services were provided.

1.1.4.1 For resold services for Sprint CLEC, charges for services will be calculated on an individual customer account level, including, if applicable, any charge for usage or usage allowances. AT&T will also bill Sprint CLEC, and Sprint CLEC will be responsible for and remit to AT&T, all appropriate charges to said services including but not limited to 911 and E911 charges, EUCL charges, federal subscriber line charges, telecommunications relay charges, and franchise fees, unless otherwise ordered by a Commission to the extent the charges are valid.

1.1.5 AT&T will not perform billing and collection services for Sprint as a result of the execution of this Agreement.

1.2 Establishing Accounts and Subsequent State Certifications. After submitting a credit profile and deposit, if required, and after receiving certification as a local exchange carrier from the appropriate Commission, Sprint CLEC will provide the appropriate AT&T Local Contract Manager responsible for new CLEC activation, the necessary documentation to enable AT&T to establish accounts for Local Interconnection, Network Elements and Other Services and/or resold services. Such documentation shall include the Application for Master Account, if applicable, proof of authority to provide Telecommunications Services, the appropriate OCN for each state as assigned by the NECA, CIC, if applicable, ACNA, if applicable, AT&T's blanket form Letter of Authorization (LOA), Misdirected Number form, if applicable, and a tax exemption certificate, if applicable. Notwithstanding anything to the contrary in this Agreement, Sprint may not order services under a new account and/or subsequent state certifications established in accordance with this Section until thirty (30) days after all information specified in this Section is received from Sprint.

1.2.1 Sprint shall provide AT&T with documentation from Telcordia identifying the ACNAs assigned to it by Telcordia (as applicable) in the same legal name as reflected in the preamble and Exhibit A in the General Terms and Conditions of this Agreement. Such ACNAs will be used by Sprint to order services pursuant to this Agreement by the specific Sprint entity assigned to the ACNA via Telcordia. Each of the entities listed in Exhibit A of the General Terms and Conditions will either use its Telcordia assigned ACNA or, if one of the Sprint PCS entities is ordering on behalf of Sprint Spectrum L.P., the Telcordia assigned ACNA of Sprint Spectrum L.P. (and related national/state OCNs where necessary) to order facilities and services. Except for an entity's use of Sprint Spectrum L.P. ACNA/OCNs, ACNAs may not otherwise be shared among the entities listed in Exhibit A.

1.2.2 Company Identifiers. If Sprint needs to change, add to, eliminate or convert its OCN(s), ACNAs and other identifying codes (collectively "Company Identifiers") under which it operates when Sprint has already been conducting business utilizing those Company Identifiers, the Parties will separately address such matters through separate negotiations.

1.2.3 Tax Exemption. It is the responsibility of each Party to provide the other Party with a properly completed tax exemption certificate at intervals required by the appropriate taxing authorities. A tax exemption certificate must be supplied for each individual entity purchasing Services under this Agreement. Upon the billing Party's receipt of a properly completed tax exemption certificate, subsequent billings to the billed Party will not include those taxes or fees from which the billed Party claims an exemption. Prior to receipt of a properly completed exemption certificate, the Billing Party shall bill, and the billed Party shall pay all applicable taxes and fees. In the event that billed Party believes that it is entitled to an

exemption from and refund of taxes with respect to the amount billed prior to the billing Party's receipt of a properly completed exemption certificate, the Billed Party shall assign to the Billing Party its rights to claim a refund of such taxes. If applicable law prohibits the assignment of tax refund rights or requires the claim for refund of such taxes to be filed by the billing Party, the billing Party shall, after receiving a written request from the billed Party and at the billed Party's sole expense, pursue such refund claim on behalf of the billed Party, provided that the billed Party promptly reimburses the billing Party for any reasonable costs and expenses incurred by the billing Party in pursuing such refund claim and provided further that the billed Party shall have the righ, by mutual agreement of the Parties, to deduct any such reasonable outstanding costs and expenses from the amount of any refund obtained prior to remitting such refund to Sprint. The billed Party shall be solely responsible for the computation, tracking, reporting and payment of all taxes and fees associated with the services provided by the billed Party to its customers.

1.3 Deposit Policy.

1.3.1 To the extent satisfactory credit has not already been established, Sprint shall complete the AT&T Credit Profile (AT&T form) and provide information to AT&T regarding Sprint's credit worthiness and financial condition. Based on AT&T's analysis of the AT&T Credit Profile and other relevant information regarding Sprint's credit and financial condition, AT&T reserves the right to require Sprint to provide AT&T with a suitable form of security deposit for Sprint's account(s). If, in the reasonable opinion of AT&T, circumstances so warrant, AT&T reserves the right to request additional security, or to require a security deposit if none was previously requested. In determining whether an additional security deposit is required, AT&T may request an updated Credit Profile and will review Sprint's D & B rating and report details, Sprint's payment history with AT&T, and to the extent available, Sprint's financial information. Upon the conclusion of this review, if AT&T continues to insist on additional security, at Sprint's request, AT&T will provide an explanation in writing to Sprint justifying the decision for additional deposit.

1.3.2 Security deposit shall take the form of cash, an Irrevocable Letter of Credit (AT&T form), Surety Bond (AT&T form or another form substantially similar in its substantive provisions) or, some other form of security as the Parties may mutually agree. Any such security deposit shall in no way release Sprint from its obligation to make complete and timely payments of its bill(s). If the Parties agree that Sprint is to provide a security deposit, pursuant to Sec.1.2, Sprint shall provide such security deposits prior to the inauguration of service unless service has already been established pursuant to this Agreement, or within fifteen (15) days of AT&T's request, as applicable. Deposit request notices will be sent to Sprint via certified mail or overnight delivery. Such notice period will start the day after the deposit request notice is rendered by certified mail or overnight delivery. Interest on a cash security deposit shall accrue and be applied or refunded in accordance with the terms in AT&T's GSST.

1.3.3 Security deposits collected under this Section shall not exceed two (2) months' estimated billing. Estimated billings are calculated based upon the monthly average of the previous six (6) months current billings, if Sprint has received service from AT&T during such period at a level comparable to that anticipated to occur over the next six (6) months. If either Sprint or AT&T has reason to believe that the level of service to be received during the next six (6) months will be materially higher or lower than received in the previous six (6) months, Sprint and AT&T shall agree on a level of estimated billings based on all relevant information.

1.3.4 In the event Sprint fails to remit to AT&T any undisputed deposit requested pursuant to this Section within thirty (30) days of Sprint's receipt of such request, service to Sprint may be Suspended, Discontinued or Terminated in accordance with the terms of Section 1.5 below. Upon Termination of services, AT&T shall apply any security deposit to Sprint's final bill for its account(s).

1.3.4.1 At least sixty (60) days prior to the expiration of any letter of credit provided by Sprint as security under this Agreement, AT&T will provide to Sprint a letter of notice stating that Sprint must renew such letter of credit or provide AT&T with evidence that Sprint has obtained a suitable replacement for the letter of credit. At least seven (7) days prior to the expiration of any letter of credit provided by Sprint as security under this Agreement, Sprint shall renew such letter of credit or provide AT&T with evidence that Sprint has obtained a suitable replacement for the letter of credit. If Sprint fails to comply with the foregoing, AT&T shall thereafter be authorized to draw down the full amount of such letter of credit and utilize the cash proceeds as security for Sprint accounts(s). If Sprint provides a security deposit or additional security deposit in the form of a surety bond as required herein, at least sixty (60) days prior to the cancellation of any surety bond provided by Sprint as security under this Agreement, AT&T will provide to Sprint a letter of notice stating that Sprint must renew the surety bond or provide AT&T with evidence that Sprint has obtained a suitable replacement for the surety bond. Sprint shall renew the surety bond or provide AT&T with evidence that Sprint has obtained a suitable replacement for the surety bond at least seven (7) days prior to the cancellation date of the surety bond. If Sprint fails to comply with the foregoing, AT&T shall thereafter be authorized to take action on the surety bond and utilize the cash proceeds as security for Sprint's account(s). If the credit rating of any bonding company that has provided Sprint with a surety bond provided as security hereunder has fallen below B, AT&T will provide written notice to Sprint that Sprint must provide a replacement bond or other suitable security within fifteen (15) days of AT&T's written notice. If Sprint fails to comply with the foregoing, AT&T shall thereafter be authorized to take action on the surety bond and utilize the cash proceeds as security for Sprint's account(s). Notwithstanding anything contained in this Agreement to the contrary, AT&T shall be authorized to draw down the full amount of any letter of credit or take action on any surety bond provided by Sprint as security hereunder if Sprint defaults on its account(s) or otherwise fails to make any payment or payments

required under this Agreement in the manner and within the time, as required herein.

1.3.5 The Parties will work together to determine the need for or amount of a reasonable initial or increase in deposit. If the Parties are unable to agree, then Sprint must file a petition for resolution of the dispute. Such petition shall be filed with the Commission in the state in which Sprint does the most business with AT&T. The Parties agree that the decision ordered by such Commission will be binding for all states covered by this Agreement. In the event Sprint fails to file a petition with the Commission then AT&T may terminate service to Sprint in accordance with the terms of Section 1.5 below, and any security deposits will be applied to Sprint's account.

1.4 Payment Responsibility. Payment of all charges for services ordered by the billed Party will be the responsibility of the billed Party. The billed Party shall pay invoices by utilizing wire transfer services, automatic clearing house services or manual checks. The billed Party shall make payment to the billing Party for all services billed excluding disputed amounts.

1.4.1 Payment Due. Payment for services provided, excluding disputed charges, is due on or before the next bill date. Information required to apply payments must accompany the payment. The information must notify the billing Party of Billing Account Numbers (BAN) paid invoices paid, if applicable, and the amount to be applied to each BANand invoice (Remittance Information). Payment is considered to have been made when the payment and Remittance Information are received by the billing Party. If the Remittance Information is not received with payment, the billing Party will be unable to apply amounts paid to the billed Party's accounts. In such event, the billing Party shall hold such funds until the Remittance Information is received. If the billed Party does not supply the remittance information by the payment due date on a persistent basis, late payment charges may apply.

1.4.1.1 Due Dates. If the payment due date falls on a Sunday or on a holiday that is observed on a Monday, the payment due date shall be the first non-holiday day following such Sunday or holiday. If the payment due date falls on a Saturday or on a holiday which is observed on Tuesday, Wednesday, Thursday, or Friday, the payment due date shall be the last non-holiday day preceding such Saturday or holiday. If payment is not received by the payment due date, a late payment charge, as set forth below, shall apply.

1.4.1.2 Late Payment to AT&T. If any portion of the payment, less disputes, is not received by AT&T on or before the payment due date as set forth above, or if any portion of the payment is received by AT&T in funds that are not immediately available to AT&T, then a late payment and/or interest charge shall be due to AT&T. The late payment and/or interest charge shall apply to the portion of the payment, less disputes, not received and shall be assessed as set forth in Section A2 of AT&T's GSST, Section B2 of the Private Line Service Tariff or Section E2 of the AT&T intrastate Access Services Tariff, or pursuant to the applicable state

law as determined by AT&T. In addition to any applicable late payment and/or interest charges, Sprint may be charged a fee for all returned checks at the rate set forth in Section A2 of AT&T's GSST or pursuant to the applicable state law.

1.4.1.3 Late Payment to Sprint. If any portion of the payment, less disputes, is not received by Sprint on or before the payment due date as set forth above, or if any portion of the payment is received by Sprint in funds that are not immediately available to Sprint, then a late payment interest charge shall be due to Sprint. The late payment interest charge shall apply to the portion of the payment, less disputes, not received and shall be assessed at 1.5% per month.

1.5 Discontinuing Service. The procedures for discontinuing service are as follows, subject to applicable law:

1.5.1 In order of severity, Suspend/Suspension, Discontinue/Discontinuance and Terminate/Termination are defined as follows for the purposes of this Attachment:

1.5.1.1 Suspend/Suspension is the temporary restriction of the billed Party's access to the ordering systems and/or access to the billed Party's ability to initiate PIC-related changes. In addition, during Suspension, pending orders may not be completed and orders for new service or changes to existing services may not be accepted.

1.5.1.2 Discontinue/Discontinuance is the denial of service by the billing Party to the billed Party that will result in the disruption and discontinuation of service to the billed Party's customers. Additionally, at the time of Discontinuance, the billing Party will remove any Local Service Freezes in place on the billed Party's customers.

1.5.1.3 Terminate/Termination is the disconnection of service by the billing Party to the billed Party.

1.5.2 Discontinuing Service to Sprint

1.5.2.1 Suspension**.** For Local Services provided under this Agreement, if payment of amounts for services ordered by Sprint net of disputes due as described herein is not received by the bill date in the month after the original bill date, or as required in Section 1.3.1 above in the case of deposit requests, AT&T will notify the Sprint department designated for bill verification and provide written notice to Sprint that Sprint ordered services will be Suspended if payment of such amounts, and all other amounts that become past due before Suspension, is not received by wire transfer, automatic clearing house, or check in the manner set forth in Section 1.4 above or, in the case of a security deposit request in the manner set forth in Section 1.3.1 above: (1) within fifteen (15) days following such notice; and (2) within seven (7) days following such notice for security deposit requests.

1.5.2.1.1 The Suspension notice shall also provide that all past due charges for CRIS and IBS billed services, and all other amounts that become past due for such services before Discontinuance, must be paid within thirty (30) days from the date of the Suspension notice to avoid Discontinuance of CRIS and IBS billed services.

1.5.2.1.2 For CABS billed services, AT&T will provide a Discontinuance notice that is separate from the Suspension notice, that all past due charges for CABS billed services, and all other amounts that become past due for such services before Discontinuance, must be paid within thirty (30) days from the date of the Suspension notice to avoid Discontinuance of CABS billed services. This Discontinuance notice may be provided at the same time that AT&T provides the Suspension notice.

1.5.2.2 Discontinuance. For all services provided under this Agreement, if payment of amounts for services ordered by Sprint net of disputes due as described herein is not received by the bill date in the month after the original bill date, AT&T will provide written notice that AT&T may Discontinue the provision of existing services to Sprint if payment of such amounts, and all other amounts that become past due before Discontinuance, including requested security deposits, is not received by wire transfer, automatic clearing house or check in the manner set forth in Section 1.4 above, or in the case of a deposit in accordance with Section 1.2 above, within thirty (30) days following such written notice; provided, however, that AT&T may provide written notice that such existing services may be Discontinued within fifteen (15) days following such notice, subject to the criteria described below.

1.5.2.2.1 AT&T may take the action to Discontinue the provision of existing Sprint ordered service upon fifteen (15) days from the day after AT&T provides written notice of such Discontinuance if (a) such notice is sent by certified mail or overnight delivery; (b) Sprint has not paid all amounts, less disputes, due pursuant to a subject bill(s), or has not provided adequate security pursuant to a deposit pursuant to the deposit provisions of this Agreement and (c) either:

(1) AT&T has sent the subject bill(s) to Sprint within seven (7) business days of the bill date(s), verifiable by records maintained by AT&T:

i. in paper or CDROM form via the United States Postal Service (USPS), or
ii. in magnetic tape form via overnight delivery, or
iii. via electronic transmission; or

(2) AT&T has sent the subject bill(s) to Sprint, using one of the media described in (1) above, more than thirty (30) days before notice to Discontinue service has been rendered.

1.5.2.2.2 In the case of Discontinuance of services, all undisputed billed charges, as well as applicable disconnect charges, shall become due.

1.5.2.2.3 Sprint is solely responsible for notifying the customer of the Discontinuance of service. If, within fourteen (14) days after Sprint's services have been Discontinued, Sprint pays, by wire transfer, automatic clearing house or check, all

past due undisputed charges and any applicable restoral charges as set forth in Section A4 of AT&T's GSST, then AT&T will reestablish service for Sprint.

1.5.2.3 Termination. If within fourteen (14) days after Sprint's service has been Discontinued and Sprint has failed to pay all past due charges as described above, then Sprint's service will be Terminated.

1.5.3 Discontinuing Service to AT&T

1.5.3.1 For facilities and services provided under this agreement, if payment of amounts for such facilities and services, net of disputes, due as described herein is not received by the bill date in the month after the original bill date, Sprint will provide written notice to the AT&T department designated for bill verification notifying AT&T ordering will be Suspended in fifteen (15) days if payment of such amounts, and all other amounts that become past due before Suspension, is not received by wire transfer, automatic clearing house, or check, as noted in Section 1.4 above. Additionally, Sprint will advise AT&T in the aforementioned notice that Sprint may Discontinue the provision of existing services to AT&T if payment of such amounts, and all other amounts that become past due before Discontinuance, is not received in a form noted above within thirty (30) days following such written notice. If within fourteen (14) days after AT&T's service has been Discontinued and AT&T has failed to pay all past due charges as described above, then AT&T's service will be Terminated.

2. Billing Disputes

2.1 The Parties shall electronically submit all billing disputes to each other utilizing email or other electronic method upon agreement. The Parties will utilize a mutually agreed upon format. The Parties will continue to use a mutually agreed upon format while jointly pursuing commercially reasonable process improvement efforts. In the event of a billing dispute, the Parties will endeavor to resolve the dispute within sixty (60) days of the notification date. If the billed Party disagrees with the billing Party's denial or partial denial of a billing dispute, or if no response has been received by the 60th day after submission, the parties agree to use the escalation process that is currently in place between the companies.

2.1.1 If the billed Party does not elect to pursue the dispute by utilizing the escalation process, the billing Party's resolution will be considered as accepted by the billed Party and the dispute will be closed.

2.1.1.2 If after escalation, the Parties are unable to reach resolution, then the aggrieved Party, if it elects to pursue the dispute shall pursue Dispute Resolution in accordance with the General Terms and Conditions of this Agreement.

2.2 For purposes of this Section 2, a billing dispute means a reported dispute submitted pursuant to Section 2.1 above of a specific amount of money actually billed by the billing Party within twelve (12) months of the submission of such

dispute. The billed Party agrees to not submit billing disputes for amounts billed more than twelve (12) months prior to submission of a billing dispute filed for amounts billed. The billing dispute must be clearly explained by the billed Party and supported by written documentation, which clearly shows the basis for disputing charges. Disputes that are not clearly explained or those that do not provide complete information may be rejected by the billing Party. The billing Party will notify the billed Party that the dispute has been rejected. The rejection notice will be sent by email to the Party who submitted the original dispute and will specify the reason that the dispute was rejected so that the billed Party may resubmit with the appropriate information. Claims will not be rejected solely for information required to load the dispute into AT&T's dispute systems. Claims by the billed Party for damages of any kind will not be considered a billing dispute for purposes of this Section. If the billing Party resolves the billing dispute, in whole or in part, in favor of the billed Party, any credits and interest due to the billed Party as a result thereof shall be applied to the billed Party's account by the billed Party upon resolution of the billing dispute. If the billing Party resolves the billing dispute, in whole or in part, in favor of the billing Party, the billed Party will remit all monies withheld, including Late Payment charges and interest, pursuant to Sections 1.4.1.2 and 1.4.1.3 above, during the next complete billing cycle.

3. RAO Hosting

3.1 RAO Hosting, Calling Card and Third Number Settlement System (CATS) and Non-Intercompany Settlement System (NICS) services provided to Sprint by AT&T will be in accordance the Sprint/AT&T Contract Provisions for RAO Hosting and ICS which is incorporated herein by reference, or as subsequently modified by the Parties.

ATTACHMENT 8

LICENSE

for

RIGHTS OF WAY (ROW), CONDUITS, AND POLE ATTACHMENTS

Dated: _____ , _____

Between

BELLSOUTH TELECOMMUNICATIONS, INC.
d/b/a
AT&T ALABAMA, AT&T FLORIDA, AT&T GEORGIA,
AT&T KENTUCKY, AT&T LOUISIANA, AT&T MISSISSIPPI,
AT&T NORTH CAROLINA, AT&T SOUTH CAROLINA AND AT&T TENNESSEE
(Licensor)

And

Sprint's legal name to be inserted

(Licensee)

Sprint desires to conduct business in the following area(s):

☐ AL ☐ KY ☐ LA ☐ MS ☐ TN ☐ FL ☐ GA ☐ NC ☐ SC

or

☐ AT&T Region

AT&T License Number - _____

Sprintrv4.doc

C O N T E N T S

SECTION		PAGE
1	Definitions	1
2	Scope of Agreement	5
3	Requirements and Specifications	9
4	Additional Legal Requirements	16
5	Facilities and Licenses	17
6	Make-Ready Work	18
7	Application Forms and Fees	19
8	Processing of Applications	22
9	Issuance of Licenses	23
10	Construction of Sprint's Facilities	24
11	Use and Routine Maintenance of Sprint's Facilities	26
12	Modification and Replacement of Sprint's Facilities	28
13	Rearrangement of Facilities at request of Another	28
14	Emergency Repairs and Pole Replacements	30
15	Inspection by AT&T of Sprint's Facilities	30
16	Notice of Noncompliance	31
17	Unauthorized Occupancy or Utilization of AT&T's Facilities	32
18	Removal of Sprint's Facilities	33
19	Fees, Charges, and Billing	33
20	Advance Payment and Imputation	34
21	Assurance of Payment	34
22	Insurance	35
23	Indemnification	36
24	Authorization Not Exclusive	38
25	Assignment of Rights	38
26	Failure to Enforce	38
27	Term of Agreement	38
28	Supersedure of Agreement(s)	39

APPENDICES

I Schedule of Fees, Charges, and Attachment Transfer Rate Schedule

II Records Maintenance Centers

EXHIBITS

I Administrative Forms and Notices

RIGHTS OF WAY (ROW), CONDUITS AND POLE ATTACHMENTS

This Attachment, together with the General Terms and Conditions Sections of this Agreement, sets forth the terms and conditions under which AT&T shall afford to Sprint access to AT&T's Poles, Ducts, Conduits and Rights-of-Way, pursuant to the Act

1. DEFINITIONS

Definitions in General. Except as the context otherwise requires, the terms defined in this Attachment shall, as used herein, have the meanings set forth in this Section 1.

1.1 Anchor. The term Anchor refers to a device, structure, or assembly which stabilizes a Pole and holds it in place. An Anchor assembly may consist of a rod and fixed object or plate, typically embedded in the ground, which is attached to a guy strand or guy wire, which, in turn, is attached to the Pole. The term Anchor does not include the guy strand which connects the Anchor to the Pole and includes only those Anchors which are owned by AT&T, as distinguished from Anchors which are owned and controlled by other persons or entities.

1.2 Anchor/Guy Strand. The term Anchor/Guy Strand refers to supporting wires, typically stranded together, or other devices attached to a Pole and connecting that Pole to an Anchor or to another Pole for the purpose of increasing Pole stability. The term Anchor/Guy Strand includes, but is not limited to, strands sometimes referred to as Anchor strands, down guys, guy strands, and Pole-to-Pole guys.

1.3 Application. The process of requesting information related to records, Pole and/or Conduit availability, or make-ready requirements for AT&T owned or controlled Facilities. Each Application is limited in size to a maximum of (1) 100 consecutive Poles or (2) 10 consecutive Manhole sections or 5000 feet, whichever is greater. The Application includes (but is not limited to) request for records, records investigation and/or a field investigation, and Make-Ready Work.

1.4 Communications Act of 1934. The terms Communications Act of 1934 and Communications Act refer to the Communications Act of June 19, 1934, 48 Stat. 1064, as amended, including the provisions codified as 47 U.S.C. Sections 151 et seq. The Communications Act includes the Pole Attachment Act of 1978, as defined in 1.23 following.

1.5 Assigned. The term Assigned, when used with respect to Conduit or Duct space or Poles, refers to any space in such Conduit or Duct or on such Pole that is occupied by a telecommunications service provider or a municipal or other governmental authority. To ensure the judicious use of Poles and Conduits, space Assigned to a telecommunications service provider must be physically occupied by the service provider, be it AT&T or a new entrant, within twelve (12) months of the space being Assigned.

1.6 Available. The term Available, when used with respect to Conduit or Duct space or Poles, refers to any usable space in such Conduit or Duct or on such Pole not Assigned to a specific provider at the applicable time.

1.7 Conduit. The term Conduit means a structure containing one or more Ducts, usually placed in the ground, in which cables or wires may be installed.

1.8 Conduit Occupancy. The terms Conduit Occupancy and Occupancy refer to the presence of wire, cable, optical conductors, or other Facilities within any portion of AT&T's Conduit System.

1.9 Conduit System. The term Conduit System refers to any combination of Ducts, Conduits, Manholes, and Handholes joined to form an integrated whole. In this Agreement, the term refers to Conduit Systems owned or controlled by AT&T.

1.10 Cost. The term Cost as used herein refers to charges made by AT&T to Sprint for specific work performed, and shall be (a) the reasonable actual charges made by subcontractors to AT&T for work and/or, (b) if the work was performed by AT&T employees, it shall be calculated on an individual case basis, based on the estimated amount of work to be performed.

1.11 Duct. The term Duct refers to a single enclosed tube, pipe, or channel for enclosing and carrying cables, wires, and other Facilities. As used in this Agreement, the term Duct includes Inner-ducts created by subdividing a Duct into smaller channels.

1.12 Facilities. The terms facility and Facilities refer to any property or equipment utilized in the provision of telecommunication services.

1.13 The acronym FCC refers to the Federal Communications Commission.

1.14 Handholes. The term Handhole refers to an enclosure, usually below ground level, used for the purpose of installing, operating, and maintaining Facilities in a Conduit. A Handhole is too small to permit personnel to physically enter.

1.15 Inner-Duct. The term Inner-duct refers to a pathway created by subdividing a Duct into smaller channels.

1.16 Joint User. The term Joint User refers to a utility which has entered into an agreement with AT&T providing reciprocal rights of attachment of Facilities owned by each party to the Poles, Ducts, Conduits and Rights-of-Way owned by the other party.

1.17 Lashing. The term Lashing refers to the attachment of a Sprint Sheath or Inner-duct to a supporting strand.

1.18 License. The term License refers to any License issued pursuant to this Agreement and may, if the context requires, refer to Conduit Occupancy or Pole attachment Licenses issued by AT&T prior to the date of this Agreement.

1.19 Licensee. The term Licensee refers to a third person or entity which has entered or may enter into an agreement or arrangement with AT&T permitting such person or entity to place its Facilities in AT&T's Conduit System or attach its Facilities to AT&T's Poles or Anchors.

1.20 Make-Ready Work. The term Make-Ready Work refers to all work performed or to be performed to prepare AT&T's Conduit Systems, Poles or Anchors and related Facilities for the requested Occupancy or attachment of Sprint's Facilities. Make-Ready Work includes, but is not limited to, clearing obstructions (e.g., by rodding Ducts to ensure clear passage), the rearrangement, transfer, replacement, and removal of existing Facilities on a Pole or in a Conduit System where such work is required solely to accommodate Sprint's Facilities and not to meet AT&T's business needs or convenience. Make-Ready Work may require "dig-ups" of existing Facilities and may include the repair, enlargement or modification of AT&T's Facilities (including, but not limited to, Conduits, Ducts, Handholes and Manholes) or the performance of other work required to make a Pole, Anchor, Conduit or Duct usable for the initial placement of Sprint's Facilities.

1.21 Manhole. The term Manhole refers to an enclosure, usually below ground level and entered through a hole on the surface covered with a cast iron or concrete Manhole cover, which personnel may enter and use for the purpose of installing, operating, and maintaining Facilities in a Conduit.

1.22 Occupancy. The term occupancy shall refer to the physical presence of telecommunication Facilities in a Duct, on a Pole, or within a Right-of-way.

1.23 Owner. The term Owner is defined as the person in whom is vested the ownership, or title of property; proprietor.

1.24 Person Acting on Sprint's Behalf. The terms Person Acting on Sprint's Behalf, personnel performing work on Sprint's behalf, and similar terms include both natural persons and firms and ventures of every type, including, but not limited to, corporations, partnerships, limited liability companies, sole proprietorships, and joint ventures. The terms Person Acting on Sprint's Behalf, personnel performing work on Sprint's behalf, and similar terms specifically include, but are not limited to, Sprint, its officers, directors, employees, agents, representatives, attorneys, contractors, subcontractors, and other persons or entities performing services at the request of or as directed by Sprint and their respective officers, directors, employees, agents, and representatives.

1.25 Person Acting on AT&T's Behalf. The terms Person Acting on AT&T's Behalf, personnel performing work on AT&T's behalf, and similar terms include both natural persons and firms and ventures of every type, including but not limited to corporations, partnerships, limited liability companies, sole proprietorships, and joint ventures. The terms Person Acting on AT&T's Behalf, personnel performing work on AT&T's behalf, and similar terms specifically include, but are not limited to, AT&T, its officers, directors, employees, agents, representatives, attorneys, contractors, subcontractors, and other persons or entities performing services at the request or on behalf of AT&T and their respective officers, directors, employees, agents, and representatives.

1.26 Pole. The term Pole refers to both utility Poles and Anchors but only to those utility Poles and Anchors owned or controlled by AT&T, and does not include utility Poles or Anchors with respect to which AT&T has no legal authority to permit attachments by other persons or entities.

1.27 Pole Attachment Act. The terms Pole Attachment Act and Pole Attachment Act of 1978 refer to those provisions of the Communications Act of 1934, as amended, now codified as 47 U.S.C. § 224.

1.28 Pre-License Survey. The term Pre-License Survey refers to all work and activities performed or to be performed to determine whether there is adequate capacity on a Pole or in a Conduit or Conduit System (including Manholes and Handholes) to accommodate Sprint's Facilities and to determine what Make-Ready Work, if any, is required to prepare the Pole, Conduit or Conduit System to accommodate Sprint's Facilities.

1.29 Right-of-Way (ROW). The term Right-of-Way refers to the right to use the land or other property of another party to place Poles, Conduits, cables, other structures and equipment, or to provide passage to access such structures and equipment. A Right of Way may run under, on, or above public or private property (including air space above public or private property) and may include the right to use discrete space in buildings, building complexes, or other locations.

1.30 Sheath. The term Sheath refers to a single outer covering containing communications wires, fibers, or other communications media.

1.31 Spare Capacity. The term Spare Capacity refers to any Poles, Conduit, Duct or Inner-duct not currently Assigned or subject to a pending Application for attachment/Occupancy. Spare capacity does not include an Inner-duct (not to exceed one Inner-duct per party) reserved by AT&T, Sprint, or a Third Party for maintenance, repair, or emergency restoration.

1.32 Intentionally left blank.

1.33 Third Party. The terms Third Party and third parties refer to persons and entities other than Sprint and AT&T. Use of the term Third Party does not signify that any such person or entity is a party to this Agreement or has any contractual rights hereunder.

2. SCOPE OF AGREEMENT

2.1 Undertaking of AT&T. AT&T shall provide Sprint with equal and nondiscriminatory access to Poles, Conduits, Ducts, and Rights-of-Way on terms and conditions equal to those provided by AT&T to itself or to any other telecommunications service provider. Further, AT&T shall not withhold or delay assignment of such Facilities to Sprint because of the potential or forecasted needs of itself or other parties.

2.2 Attachments and Occupancies Authorized by this Agreement. AT&T shall issue one or more Licenses to Sprint authorizing Sprint to attach Facilities to AT&T's owned or controlled Poles and to place Facilities within AT&T's owned or controlled Conduits, Ducts or Rights-of-Way under the terms and conditions set forth in this Section and the Telecommunications Act of 1996.

2.2.1 Unless otherwise provided herein, authority to attach Facilities to AT&T's owned or controlled Poles, to place Facilities within AT&T's owned or controlled Conduits, Ducts or Rights-of-Way shall be granted only in individual Licenses granted under this Agreement and the placement or use of such Facilities shall be determined in accordance with such Licenses and procedures established in this Agreement.

2.2.2 Sprint agrees that its attachment of Facilities to AT&T's owned or controlled Poles, Occupancy of AT&T's owned or controlled Conduits, Ducts or Rights-of-Way shall take place pursuant to the licensing procedures set forth herein, and AT&T agrees that it shall not unreasonably withhold or delay issuance of such Licenses.

2.2.3 Sprint may not sublease or otherwise authorize any Third Party to use any part of the AT&T Facilities licensed to Sprint under this Attachment, except that Sprint may lease its own Facilities to third parties. Notwithstanding the above, upon notice to AT&T, Sprint may permit Third Parties who have an agreement with AT&T to overlash to existing Sprint attachments in accordance with the terms and conditions of such Third Party’s agreement with AT&T, and Sprint may lease dark fiber to a Third Party.

2.3 Licenses. Subject to the terms and conditions set forth in this Agreement, AT&T shall issue to Sprint one or more Licenses authorizing Sprint to place or attach Facilities in or to specified Poles, Conduits, Ducts or Rights-of-Way owned or controlled by AT&T located within this state on a first come, first served basis. AT&T may deny a License Application if AT&T determines that the Pole, Conduit or Duct space specifically requested by Sprint is necessary to meet AT&T's plans that are anticipated/projected for the next 1-year planning period, or is licensed by AT&T to another Licensee, or is otherwise unavailable based on engineering concerns. AT&T shall provide written notice to Sprint within a reasonable time specifying in detail the reasons for denying Sprint's request. AT&T shall have the right to designate the particular Duct(s) to be occupied, the location and manner in which Sprint's Facilities will enter and exit AT&T's Conduit System and the specific location and manner of installation for any associated equipment which is permitted by AT&T to occupy the Conduit System.

2.4 Access and Use of Rights-of-Way. AT&T acknowledges that it is required by the Telecommunications Act of 1996 to afford Sprint access to and use of all associated Rights-of-Way to any sites where AT&T's owned or controlled Poles, Manholes, Conduits, Ducts or other parts of AT&T's owned or controlled Conduit Systems are located.

2.4.1 AT&T shall provide Sprint with access to and use of such Rights-of-Way to the same extent and for the same purposes that AT&T may access or use such Rights-of-Way, including but not limited to access for ingress, egress or other access and to construct, utilize, maintain, modify, and remove Facilities for which Pole attachment, Conduit Occupancy, or ROW use Licenses have been issued, provided that any agreement with a Third Party under which AT&T holds such rights expressly or impliedly grants AT&T the right to provide such rights to others.

2.4.2 Where AT&T notifies Sprint that AT&T's agreement with a Third Party does not expressly or impliedly grant AT&T the ability to provide such access and use rights to others, upon Sprint's request, AT&T will use its best efforts to obtain the Owner's consent and to otherwise secure such rights for Sprint. Sprint agrees to reimburse AT&T for the reasonable and demonstrable Costs incurred by AT&T in obtaining such rights for Sprint.

2.4.3 In cases where a Third Party agreement does not grant AT&T the right to provide access and use rights to others as contemplated in 2.4.1 and AT&T, despite its best efforts, is unable to secure such access and use rights for Sprint in accordance with 2.4.2, or, in the case where Sprint elects not to invoke its rights under 2.4.1 or 2.4.2, Sprint shall be responsible for obtaining such permission to access and use such Rights-of-Way. AT&T shall cooperate with Sprint in obtaining such permission and shall not prevent or delay any Third Party assignment of ROW's to Sprint.

2.4.4 Where AT&T has any ownership or Rights-of-Way to buildings or building complexes, or within buildings or building complexes, AT&T shall offer to Sprint through a License or other attachment:

2.4.4.1 The right to use any Available space owned or controlled by AT&T in the building or building complex to install Sprint equipment and Facilities; and

2.4.4.2 Ingress and egress to such space.

2.4.5 Except to the extent necessary to meet the requirements of the Telecommunications Act of 1996, neither this Agreement nor any License granted hereunder shall constitute a conveyance or assignment of any of either party's rights to use any public or private Rights-of-Way, and nothing contained in this Agreement or in any License granted hereunder shall be construed as conferring on one party any right to interfere with the other party's access to any such public or private Rights-of-Way.

2.5 No Effect on AT&T's Right to Convey Property. Nothing contained in this Agreement or in any License issued hereunder shall in any way affect the right of AT&T to convey to any other person or entity any interest in real or personal property, including any Poles, Conduit or Ducts to or in which Sprint has attached or placed Facilities pursuant to Licenses issued under this Agreement provided however that AT&T shall give Sprint reasonable advance written notice of such intent to convey.

2.6 No Effect on AT&T's Rights to Manage its Own Facilities. This Agreement shall not be construed as limiting or interfering with AT&T's rights set forth below, except to the extent expressly provided by the provisions of this Agreement or Licenses issued hereunder or by the Telecommunications Act of 1996 or other applicable laws, rules or regulations:

2.6.1 To locate, relocate, move, replace, modify, maintain, and operate AT&T's own Facilities within AT&T's Conduits, Ducts or rights-of way or any of AT&T's Facilities attached to AT&T's Poles at any time and in any reasonable manner which AT&T deems appropriate to serve its customers, avail itself of new business opportunities, or otherwise meet its business needs; or

2.6.2 To enter into new agreements or arrangements with other persons or entities permitting them to attach or place their Facilities to or in AT&T's Poles, Conduits or Ducts; provided, however, that such relocations, moves, replacements, modifications, maintenance and operations or new agreements or arrangements shall not substantially interfere with Sprint's Pole attachment, Conduit Occupancy or ROW use, rights provided by Licenses issued pursuant to this Agreement.

2.7 No Effect on Sprint's Rights to Manage its Own Facilities. This Agreement shall not be construed as limiting or interfering with Sprint's rights set forth below, except to the extent expressly provided by the provisions of this Agreement or Licenses issued hereunder or by the Telecommunications Act of 1996 or other applicable laws, rules or regulations:

2.7.1 To locate, relocate, move, replace, modify, maintain, and operate its own Facilities within AT&T's Conduits, Ducts or Rights-of-Way or its Facilities attached to AT&T's Poles at any time and in any reasonable manner which Sprint deems appropriate to serve its customers, avail itself of new business opportunities, or otherwise meet its business needs; or

2.7.2 To enter into new agreements or arrangements with other persons or entities permitting Sprint to attach or place its Facilities to or in such other persons' or entities' Poles, Conduits or Ducts, or Rights-of-Way; provided, however, that such relocations, moves, replacements, modifications, maintenance and operations or new agreements or arrangements shall not conflict with Sprint's obligations under Licenses issued pursuant to this Agreement.

2.8 No Right to Interfere with Facilities of Others. The provisions of this Agreement or any License issued hereunder shall not be construed as authorizing either party to this Agreement to rearrange or interfere in any way with any of the other party's Facilities, with the Facilities of other persons or entities, or with the use of or access to such Facilities by such other party or such other persons or entities, except to the extent expressly provided by the provisions of this Agreement or any License issued hereunder or by the Telecommunications Act of 1996 or other applicable laws, rules or regulations.

2.8.1 Sprint acknowledges that the Facilities of persons or entities other than AT&T and Sprint may be attached to or occupy AT&T's Poles, Conduits, Ducts and Rights-of-Way.

2.8.2 AT&T shall not attach, or give permission to any third parties to attach Facilities to, existing Sprint Facilities without Sprint's prior written consent. If AT&T becomes aware of any such unauthorized attachment to Sprint Facilities, AT&T shall notify Sprint of any such unauthorized attachments. AT&T shall coordinate with Sprint, and AT&T shall use its best efforts to rectify the situation.

2.8.3 With respect to Facilities occupied by Sprint or the subject of an Application for attachment by Sprint, AT&T will give to Sprint 60 calendar days' written notice for Conduit extensions or reinforcements, 60 calendar days' written notice for Pole line extensions, 60 calendar days' written notice for Pole replacements, and 60 calendar days' written notice of AT&T's intention to construct, reconstruct, expand or place such Facilities or of AT&T's intention not to maintain or use any existing facility. Where AT&T elects to abandon or remove AT&T Facilities, the Facilities will be offered to existing occupants on a first-in, first-right to maintain basis. The party first electing to exercise this option will be required to execute the appropriate agreement with AT&T to transfer (purchase agreement) ownership from AT&T to new party, subject to then-existing Licenses pertaining to such Facilities. If no party elects to maintain such Facilities, all parties will be required to remove their existing Facilities within ninety (90) calendar days of written notice from AT&T. If an emergency or provisions of an applicable joint use agreement require AT&T to construct, reconstruct, expand or replace Poles, Conduits or Ducts occupied by Sprint or the subject of an Application for attachment by Sprint, AT&T will notify Sprint as soon as reasonably practicable of such proposed construction, reconstruction, expansion or replacement to enable Sprint, if it so desires, to request that a Pole, Conduit or Duct of greater height or capacity be utilized to accommodate an anticipated facility need of Sprint.

2.8.4 Upon Sprint's request and at its expense, AT&T shall remove any retired cable from Conduit Systems to accommodate Sprint's Facilities and allow for the efficient use of Conduit space within a reasonable period of time. AT&T retains salvage rights on any cable removed. In order to safeguard its structures and Facilities, AT&T reserves the right to remove retired cables and is under no obligation to allow Licensee the right to remove such cables. Based on sound engineering judgement, there may be situations where it would neither be feasible nor practical to remove retired cables. If the parties are unable to agree, on such removal arrangements, the matter may be resolved pursuant to the Dispute Resolution procedure set forth in the General Terms and Conditions of this Agreement.

2.8.5 AT&T shall allow Sprint to reserve spares and space for maintenance and emergency purposes as permitted by federal or state legal or regulatory authority.

2.9 Assignment of Space. Assignment of space on Poles, in Conduits or Ducts and within ROW's will be made pursuant to Licenses granted by AT&T on an equal basis to AT&T, Sprint and other telecommunication service providers.

3. REQUIREMENTS AND SPECIFICATIONS

3.1 Published Standards Incorporated in this Section by Reference. Sprint agrees that its Facilities shall be placed, constructed, maintained, repaired, and removed in accordance with current (as of the date when such work is performed) editions of the following publications, each of which is incorporated by reference as part of this Section :

3.1.1 The Blue Book Manual of Construction Procedures, Special Report SR-TAP-001421, published by Telcordia Technologies, f/k/a Bell Communications Research, Inc. ("BellCore"), and sometimes referred to as the "Blue Book";

3.1.2 The National Electrical Code (NEC); and

3.1.3 The National Electrical Safety Code (NESC).

3.2 Changes in Published Standards. Sprint agrees to rearrange its Facilities in accordance with changes in the standards published in the publications specified in Article 3.1 of this Agreement if required by law to do so or upon the mutual agreement of the parties.

3.3 Additional Electrical Design Specifications. Sprint agrees that, in addition to specifications and requirements referred to in Article 3.1 above, Sprint's Facilities placed in AT&T's Conduit System shall meet all of the following electrical design specifications:

3.3.1 No facility shall be placed in AT&T's Conduit System in violation of FCC regulations.

3.3.2 Sprint's Facilities placed in AT&T's Conduit System shall not be designed to use the earth as the sole conductor for any part of Sprint's circuits.

3.3.3 Sprint's Facilities carrying more than 50 volts AC (rms) to ground or 135 volts DC to ground shall be enclosed in an effectively grounded Sheath or shield.

3.3.4 No coaxial cable of Sprint shall occupy a Conduit System containing AT&T's cable unless such cable of Sprint meets the voltage limitations of Article 820 of the National Electrical Code.

3.3.5 Sprint's coaxial cable may carry continuous DC voltages up to 1800 volts to ground where the conductor current will not exceed one-half amperes and where such cable has two separate grounded metal sheaths or shields and a suitable insulating jacket over the outer Sheath or shield. The power supply shall be so designed and maintained that the total current carried over the outer Sheath shall not exceed 200 micro amperes under normal conditions. Conditions which would increase the current over this level shall be cleared promptly.

3.3.6 Neither party shall circumvent the other party's corrosion mitigation measures. Each party's new Facilities shall be compatible with the other party's Facilities so as not to damage any Facilities of the other party by corrosion or other chemical reaction.

3.4 Additional Physical Design Specifications. Sprint's Facilities placed in AT&T's Conduit System must meet all of the following physical design specifications:

3.4.1 Cables bound or wrapped with cloth or having any kind of fibrous coverings or impregnated with an adhesive material shall not be placed in AT&T's Conduit or Ducts.

3.4.2 The integrity of AT&T's Conduit System and overall safety of AT&T's personnel and other personnel working in AT&T's Conduit System requires that "dielectric cable" be required when Sprint's cable facility utilizes an alternative Duct or route that is shared in the same trench by any current carrying facility of a power utility.

3.4.3 New construction splices in Sprint's fiber optic and twisted pair cables shall be located in Manholes, pull boxes or Handholes.

3.5 Additional Specifications Applicable to Connections. The following specifications apply to connections of Sprint's Conduit to AT&T's Conduit System:

3.5.1 Sprint will be permitted to connect its Conduit or Duct only at the point of a AT&T Manhole. No attachment will be made by entering or breaking into Conduit between Manholes. All necessary work to install Sprint Facilities will be performed by Sprint or its contractor at Sprint’s expense. In no event shall Sprint or its contractor “core bore” or make any other modification to AT&T Manhole(s) without the prior written approval of AT&T, which approval will not be unreasonably delayed or withheld.

3.5.2 AT&T may monitor, at Sprint’s expense, the entrance and exit of Sprint's Facilities into AT&T's Manholes and the placement of Sprint's Facilities in AT&T's Manholes.

3.5.3 If Sprint constructs or utilizes a Duct connected to AT&T's Manhole, the Duct and all connections between that Duct and AT&T's Manhole shall be sealed, to the extent practicable, to prevent the entry of gases or liquids into AT&T's Conduit System. If Sprint's Duct enters a building, it shall also be sealed where it enters the building and at all other locations necessary to prevent the entry of gases and liquids from the building into AT&T's Conduit System.

3.6 Requirements Relating to Personnel, Equipment, Material, and Construction Procedures Generally. Duct clearing, rodding or modifications required to grant Sprint access to AT&T's Conduit Systems may be performed by AT&T at Sprint's expense at charges which represent AT&T's actual Costs. Alternatively (at Sprint's option) such work may be performed by a contractor who demonstrates compliance with AT&T certification requirements, which certification requirements shall be consistent with F.C.C. rules. The parties acknowledge that Sprint, its contractors, and other persons acting on Sprint's behalf will perform work for Sprint (e.g., splicing Sprint's Facilities) within AT&T's Conduit System. Sprint represents and warrants that neither Sprint nor any Person Acting on Sprint's Behalf shall permit any person to climb or work on or in any of AT&T's Poles or to enter AT&T's Manholes or work within AT&T's Conduit System unless such person has the training, skill, and experience required to recognize potentially dangerous conditions relating to Pole or the Conduit Systems and to perform the work safely.

3.6.1 Sprint's Facilities within AT&T's Conduit System shall be constructed, placed, rearranged, modified, and removed upon receipt of License specified in 5.1. However, no such License will be required for the inspection, maintenance, repair or non-physical modifications of Sprint's Facilities.

3.6.2 "Rodding" or clearing of Ducts in AT&T's Conduit System shall be done only when specific authorization for such work has been obtained in advance from AT&T, which authorization shall not be unreasonably delayed or withheld by AT&T. The parties agree that such rodding or clearing shall be performed according to existing industry standards and practices. Sprint may contract with AT&T for performance of such work or (at Sprint's option) with a contractor who demonstrates compliance with AT&T certification requirements.

3.6.3 Personnel performing work on AT&T's or Sprint's behalf in AT&T's Conduit System shall not climb on, step on, or otherwise disturb the other party's or any Third Party's cables, air pipes, equipment, or other Facilities located in any Manhole or other part of AT&T's Conduit System.

3.6.4 Personnel performing work on AT&T's or Sprint's behalf within AT&T's Conduit System (including any Manhole) shall, upon completing their work, make reasonable efforts to remove all tools, unused materials, wire clippings, cable sheathing and other materials brought by them to the work site.

3.6.5 All of Sprint's Facilities shall be firmly secured and supported in accordance with Telcordia Technologies, f/k/a Bell Communications Research, Inc. (BellCore") and industry standards.

3.6.6 Identification of Facilities in Conduit/Manholes. Sprint's Facilities shall be plainly identified with Sprint's name in each Manhole with a firmly affixed permanent tag that meets standards set by AT&T for its own Facilities.

3.6.6.1 Identification of Pole Attachments. Sprint's Facilities attached to AT&T Poles shall be plainly identified with Sprint's name firmly affixed at each Pole by a permanent tag that meets industry standards.

3.6.7 Manhole pumping and purging required in order to allow Sprint's work operations to proceed shall be performed by a vendor approved by AT&T in compliance with AT&T Practice Sec. 620-145-011BT, "Manhole Contaminants, Water, Sediment or Debris Removal and Reporting Procedures," and any amendments, revisions or supplements thereto and in compliance with all regulations and standards established by the United States Environmental Protection Agency and by any applicable state or local environmental regulators.

3.6.8 Planks or other types of platforms shall not be installed using cables, pipes or other equipment as a means of support. Platforms shall be supported only by cable racks.

3.6.9 Any leak detection liquid or device used by Sprint or personnel performing work on Sprint's Facilities within AT&T's Conduit System shall be of a type approved by AT&T or Telcordia Technologies, f/k/a Bell Communications Research, Inc. (BellCore").

3.6.10 When Sprint or personnel performing work on Sprint's behalf are working within or in the vicinity of any part of AT&T's Poles or Conduit System which is located within, under, over, or adjacent to streets, highways, alleys or other traveled Rights-of-Way, Sprint and all personnel performing work on Sprint's behalf shall follow procedures which Sprint deems appropriate for the protection of persons and property. Sprint shall be responsible, at all times, for determining and implementing the specific steps required to protect persons and property at the site. Sprint will provide all traffic control and warning devices required to protect pedestrian and vehicular traffic, workers and property from danger. AT&T shall have no responsibility for the safety of personnel performing work on Sprint's behalf, or for the safety of bystanders. Sprint also has responsibility for insuring that all operations conform to current OSHA regulations and all other governmental rules, ordinances or statutes. AT&T reserves the right to suspend Sprint's activities on, in or in the vicinity of AT&T's Poles or Conduit System if, in AT&T's reasonable judgment, any hazardous condition arises due to the activity (including both acts and omissions) of Sprint or any personnel performing work on Sprint's behalf, which suspension shall cease when the condition has been rectified.

3.6.11 Except for protective screens, no temporary cover shall be placed by Sprint or personnel performing work on Sprint's behalf over an open Manhole unless it is at least four feet above the surface level of the Manhole opening.

3.6.12 Smoking or the use of any open flame is prohibited in AT&T's Manholes, in any other portion of AT&T's Conduit System, or within 10 feet of any open Manhole entrance; provided that this provision will not prohibit the use of spark producing tools such as electric drills, fusion splicers, etc.

3.6.13 Artificial lighting, when required, will be provided by Sprint. Only explosion-proof lighting fixtures shall be used.

3.6.14 Neither Sprint nor personnel performing work on Sprint's behalf shall allow any combustible gas, vapor, liquid, or material to accumulate in AT&T's Conduit System (including any Manhole) during work operations performed within or in the vicinity of AT&T's Conduit System.

3.6.15 Sprint will abide by any laws, regulations or ordinances regarding the use of spark producing tools, equipment or devices in AT&T's Manholes, in any other portions of AT&T's Conduit System, or within 10 feet of any open Manhole opening. This includes, but is not limited to, such tools as electric drills and hammers, meggers, breakdown sets, induction sets, and the like.

3.7 Opening of Manholes. The following requirements apply to the opening of AT&T's Manholes and the authority of AT&T personnel present when work on Sprint's behalf is being performed within or in the vicinity of AT&T's Conduit System.

3.7.1 AT&T's Manholes shall be opened only as permitted by AT&T's authorized employees or agents, which permission shall not be unreasonably denied or delayed.

3.7.2 Sprint shall notify AT&T forty-eight (48) hours in advance of any routine work operation requiring entry into any of AT&T’s Manholes.

3.7.3 Sprint shall be responsible for obtaining any necessary authorization from appropriate authorities to open Manholes for Conduit work operations therein.

3.7.4 AT&T's authorized employee or agent shall not direct or control the conduct of Sprint's work at the work site. The presence of AT&T's authorized employee or agent at the work site shall not relieve Sprint or personnel performing work on Sprint's behalf of their responsibility to conduct all work operations within AT&T's Conduit System in a safe and workmanlike manner.

3.7.5 Although AT&T's authorized employee or agent shall not direct or control the conduct of Sprint's work at the work site, AT&T's employee or agent shall have the authority to suspend Sprint's work operations within AT&T's Conduit System if, in the reasonable discretion of such AT&T employee or agent, it appears that any hazardous conditions arise or any unsafe practices are being followed by Sprint or personnel performing work on Sprint's behalf.

3.8 OSHA Compliance: Notice to AT&T of Unsafe Conditions. Sprint agrees that:

3.8.1 Its Facilities shall be constructed, placed, maintained, repaired, and removed in accordance with the Occupational Safety and Health Act (OSHA) and all rules and regulations promulgated thereunder;

3.8.2 All persons acting on Sprint's behalf, including but not limited to Sprint's employees, agents, contractors, and subcontractors shall, when working on or within AT&T's Poles or Conduit System, comply with OSHA and all rules and regulations thereunder;

3.8.3 Sprint shall establish appropriate procedures and controls to assure compliance with all requirements of this section; and

3.8.4 Sprint (and any Person Acting on Sprint's Behalf) may report unsafe conditions on, in or in the vicinity of AT&T's Poles or Conduit System to AT&T.

3.9 Compliance with Environmental Laws and Regulations. Sprint acknowledges that, from time to time, environmental contaminants may enter AT&T's Conduit System and accumulate in Manholes or other Conduit Facilities and that certain Conduits (transite) are constructed with asbestos-containing materials. If AT&T has knowledge of the presence of such contaminants in a Conduit for which Sprint has applied for or holds a License, AT&T will promptly notify Sprint of such fact.

Notwithstanding any of AT&T's notification requirements in this Attachment, Sprint acknowledges that some of AT&T's Conduit is fabricated from asbestos-containing materials. Such Conduit is generally marked with a designation of "C Fiber Cement Conduit, " "Transite," or "Johns-Manville." Until proven otherwise, Sprint will presume that all Conduit not fabricated of plastic, tile, or wood is asbestos-containing and will handle it pursuant to all applicable regulations relating to worker safety and protection of the environment. AT&T makes no representations to Sprint or personnel performing work on Sprint's behalf that AT&T's Conduit System or any specific portions thereof will be free from environmental contaminants at any particular time. The acknowledgments and representations set forth in the two preceding sentences are not intended to relieve AT&T of any liability which it would otherwise have under applicable law for the presence of environmental contaminants in its Conduit Facilities. Sprint agrees to comply with the following provisions relating to compliance with environmental laws and regulations:

3.9.1 Sprint's Facilities shall be constructed, placed, maintained, repaired, and removed in accordance with all applicable federal, state, and local environmental statutes, ordinances, rules, regulations, and other laws, including but not limited to the Resource Conservation and Recovery Act (42 U.S.C. §§ 9601 et. seq.), the Toxic Substance Control Act (15 U.S.C. §§ 2601-2629), the Clean Water Act (33 U.S.C. §§ 1251 et. seq.), and the Safe Drinking Water Act (42 U.S.C. §§ 300f-300j).

3.9.2 All persons acting on Sprint's behalf, including but not limited to Sprint's employees, agents, contractors, and subcontractors, shall, when working on, within or in the vicinity of AT&T's Poles or Conduit System, comply with all applicable federal, state, and local environmental laws, including but not limited to all environmental statutes, ordinances, rules, and regulations.

3.9.3 Sprint shall establish appropriate procedures and controls to assure compliance with all requirements of this section. AT&T will be afforded a reasonable opportunity to review such procedures and controls and provide comments that will be reasonably considered in advance of their implementation. Review and comment by AT&T pursuant to this section will be provided in a timely manner.

3.9.4 Sprint and all personnel performing work on Sprint's behalf shall comply with such standards and practices as AT&T and Sprint may from time to time mutually agree to adopt to comply with environmental laws and regulations including, without limitation, AT&T Practice Sec. 620-145-011BT, "Manhole Contaminants, Water, Sediment or Debris Removal and Reporting Procedures". Pursuant to this practice, neither Sprint nor AT&T nor personnel performing work on either party's behalf shall discharge water or any other substance from any AT&T Manhole or other Conduit facility onto public or private property, including any storm water drainage system, without first testing such water or substance for contaminants in accordance with mutually agreed standards and practices and determining that such discharge would not violate any environmental law, create any environmental risk or hazard, or damage the property of any person. No such waste material shall be deposited on AT&T premises for storage or disposal.

3.10 Compliance with Other Governmental Requirements. Sprint agrees that its Facilities attached to AT&T's Facilities shall be constructed, placed, maintained, and removed in accordance with the ordinances, rules, and regulations of any governing body having jurisdiction of the subject matter. Sprint shall comply with all statutes, ordinances, rules, regulations and other laws requiring the marking and lighting of aerial wires, cables and other structures to ensure that such wires, cables and structures are not a hazard to aeronautical navigation. Sprint shall establish appropriate controls to assure such compliance by all persons acting on Sprint's behalf, including but not limited to, Sprint's employees, agents, contractors, and subcontractors.

3.11 Differences in Standards or Specifications. To the extent that there may be differences in any applicable standards or specifications referred to in this Article 3, the most stringent standard or specification shall apply.

3.12 Sprint Solely Responsible for the Condition of Its Facilities. Sprint shall be responsible at all times for the condition of its Facilities and its compliance with the requirements, specifications, rules, regulations, ordinances, and laws specified above. In this regard, AT&T shall have no duty to Sprint to inspect or monitor the condition of Sprint's Facilities (including but not limited to splices and other Facilities connections) located within AT&T's Conduit and Ducts or any attachment of Sprint's Facilities to AT&T's Poles, Anchors, Anchor/Guy Strands or other Pole Facilities. AT&T may, however, conduct such inspections and audits of its Poles and Conduit System as AT&T determines reasonable or necessary. Such inspection and audits shall be conducted at AT&T's expense with the exception of (1) follow-up inspection to confirm remedial action after an observed Sprint violation of the requirements of this Agreement; and (2) inspection of Sprint Facilities in compliance with a specific mandate of appropriate governmental authority for which inspections the Cost shall be borne by Sprint. Either party may audit the other party's compliance with the terms of this Section. Observed safety hazards or imminent facility failure conditions of another party shall be reported to the affected party where such party can be readily identified or, where not readily identifiable, shall be reported to AT&T.

3.13 Efficient use of Conduit. AT&T will install Inner-ducts to increase Duct space in existing Conduit as Facilities permit. The full complement of Inner-ducts will be installed which can be accommodated under sound engineering principles. The number of Inner-ducts which can reasonably be installed will be determined by AT&T.

4. ADDITIONAL LEGAL REQUIREMENTS

4.1 Third Party Property Owners. Licenses granted under this Attachment authorize Sprint to place Facilities in, or attach Facilities to, Poles, Conduits and Ducts owned or controlled by AT&T but do not affect the rights of landowners to control terms and conditions of access to their property.

4.1.1 Sprint agrees that neither Sprint nor any persons acting on Sprint's behalf, including but not limited to Sprint's employees, agents, contractors, and subcontractors, shall engage in any conduct which damages public or private property in the vicinity of AT&T's Poles or Conduit System, interferes in any way with the use or enjoyment of public or private property except as expressly permitted by the Owner of such property, or creates a hazard or nuisance on such property (including, but not limited to, a hazard or nuisance resulting from any abandonment or failure to remove Sprint's Facilities or any construction debris from the property, failure to erect warning signs or barricades as may be necessary to give notice to others of unsafe conditions on the premises while work performed on Sprint's behalf is in progress, or failure to restore the property to a safe condition after such work has been completed).

4.2 Required Permits, Certificates and Licenses. Sprint shall be responsible for obtaining any building permits or certificates from governmental authorities necessary to construct, operate, maintain and remove its Facilities on public or private property.

4.2.1 Sprint shall not attach or place its Facilities to or in AT&T's Poles, Conduit or Duct located on any property for which it or AT&T has not first obtained all required authorizations.

4.2.2 AT&T shall have the right to request evidence that all appropriate authorizations have been obtained. However, such request shall not delay AT&T's Pre-License Survey work.

4.3 Lawful Purposes. All Facilities placed by Sprint in AT&T's Conduit and Ducts or on AT&T's Poles, Anchors or Anchor/Guy Strands must serve a lawful purpose and the uses made of Sprint's Facilities must comply with all applicable federal, state, and local laws and with all federal, state, and local regulatory rules, regulations, and requirements. In this regard, Sprint shall not utilize any Facilities occupying or attached to AT&T's Conduits, Ducts or Poles for the purpose of providing any services which it is not authorized by law to provide or for the purpose of enabling any other person or entity to provide any such services.

5. FACILITIES AND LICENSES

5.1 Licenses Required. Before placing any Facilities in AT&T's Conduits or Ducts or attaching any Facilities to AT&T's Poles, Anchors or Anchor/Guy Strands, Sprint must first apply for and receive a written License from AT&T.

5.2 Provision of Records and Information to Sprint. In order to obtain information regarding Facilities, Sprint shall make a written request to AT&T, identifying with reasonable specificity the geographic area for which Facilities are required, the types and quantities of the required Facilities and the required in-service date. In response to such request, AT&T shall provide Sprint with information regarding the types, quantity and location (which may be provided by provision of route maps) and availability of AT&T Poles, Conduit and right-of-way located within the geographic area specified by Sprint. Provision of information under the terms of this section shall include the right of Sprint employees or agents to receive copies of engineering records or drawings which pertain to those Facilities within the geographic area identified in Sprint's request. Such copies of records shall be provided to Sprint via courier at the expense of Sprint or otherwishe available at the records location center set for in Appendix II. However, all requests for copies of records shall be submitted to the Competitive Structures Provisioning Center in Birmingham, Alabama. The Costs of producing and mailing copies of records, which are to be paid by Licensee, are on an individual case basis. The components which make up the total Costs are actual:

1) AT&T employee and contractor Costs based on the time spent researching, reviewing and copying records
2) Copying Costs
3) Shipping Costs

5.3 No Warranty of Record Information. Sprint acknowledges that records and information provided by AT&T pursuant to paragraph 5.2 may not reflect field conditions and that physical inspection is necessary to verify presence and condition of outside plant Facilities and Right-of-Way. In providing such records and information, AT&T assumes no liability to Sprint or any Third Party for errors/omissions contained therein.

5.4 Determination of Availability. AT&T shall provide Pole, Conduit and right-of-way availability information in response to a request from Sprint which identifies with reasonable specificity the Facilities for which such information is desired. Sprint may elect to be present at any field based survey of Facilities identified pursuant to this paragraph and AT&T shall provide Sprint at least forty-eight (48) hours notice prior to initiating such field survey. Sprint employees or agents shall be permitted to enter AT&T Manholes and inspect such structures to confirm usability and/or evaluate condition of the structure(s) with at least forty-eight (48) hours notice to AT&T, with a AT&T representative present and at Sprint's expense.

5.5 Assignment of Conduit, Duct and Poles. AT&T shall not unreasonably deny or delay issuance of any License and, in any event, AT&T shall issue such License as follows: (a) after the determination has been made that Make-Ready Work is not required, or (b) completion of Make-Ready Work.

5.5.1 No Make-Ready Work Required. If AT&T determines that no Make-Ready Work is required, AT&T shall approve Applications for Pole attachment and Conduit Occupancy Licenses and issue such Licenses within twenty (20) business days after the determination has been made that no Make-Ready Work is required, but in no event later than 45 calendar days after AT&T receives Sprint's Application, which period shall exclude any time AT&T is awaiting a response from Licensee.

5.5.2 Make-Ready Work Required. If Make-Ready Work is to be performed by AT&T, such Available space shall remain in effect until make-ready Costs are presented to Sprint and approval by Sprint pursuant to the time frames herein stated in 6.2. If Sprint approves AT&T's make-ready Costs, Sprint shall have twelve (12) months from the date of issuance of License to install its Facilities.

If Sprint rejects AT&T's Costs for Make-Ready Work, but then elects to perform the Make-Ready Work, in accordance with Section 6.3, itself or through a contractor or if Sprint elects from the time of Application to perform the Make-Ready Work itself or through a contractor, Sprint shall install its Facilities within twelve (12) months from the date that Sprint informs AT&T that Sprint will perform Make-Ready Work. In the event Sprint does not install its Facilities within the time frames set out in this Section 5.5, the assignment shall be void and such space shall become Available.

6. MAKE-READY WORK

6.1 Work Performed by AT&T. If performed by AT&T, Make-Ready Work to accommodate Sprint's Facilities shall be included in the normal work load schedule of AT&T with construction responsibilities in the geographic areas where the relevant Poles or Conduit Systems are located and shall not be entitled to priority, advancement, or preference over other work to be performed by AT&T in the ordinary course of AT&T's business.

6.1.1 If Sprint desires Make-Ready Work to be performed on an expedited basis and AT&T agrees to perform the work on such a basis, AT&T shall recalculate the estimated make-ready charges based upon the expedited timeframes requested. If Sprint accepts AT&T's offer, Sprint shall pay such additional charges.

6.2 All charges for Make-Ready Work performed by AT&T are payable in advance, with the amount of any such advance payment to be due within sixty (60) calendar days after receipt of an invoice from AT&T. AT&T will begin Make-Ready Work required to accommodate Sprint after receipt of Sprint's make-ready payment.

6.3 Work Performed by Certified Contractor. In lieu of obtaining performance of Make-Ready Work by AT&T, Sprint at its option may arrange for the performance of such work by a contractor certified by AT&T to work on or in its Facilities. Certification shall be granted based upon reasonable and customary criteria employed by AT&T in the selection of its own contract labor. Notwithstanding any other provisions of this Section, Sprint may not employ a contractor to accomplish Make-Ready Work if AT&T is likewise precluded from

contractor selection under the terms of an applicable joint use agreement. In accordance with section 3.6.7, all Manhole pumping and purging shall be performed by a vendor approved by AT&T.

6.4 Completion of Make-Ready Work. AT&T will issue a License to Sprint at the time all Make-Ready Work necessary to Sprint's attachment or Occupancy has been completed., but in no event shall the issuance exceed thirty (30) calendar days after completion of Make-Ready Work. AT&T agrees to perform Make-Ready Work at parity with itself and in the same timeframe within which AT&T would complete comparable work for its own, or its affiliates' own uses, and in a nondiscriminatory manner as among Licensees.

7. APPLICATION FORM AND FEES

Application Process. To apply for a License under this Attachment, Sprint shall submit the appropriate AT&T administrative form(s), per Exhibit 2, (two (2) sets of each and either a route map specifically indicating Sprint desired route or engineered drawings are to be included). Sprint has the option of (1) requesting copies of AT&T records only, (2) requesting a records and/or field survey to determine availability, and/or (3) requesting a make-ready estimate. Before the Application and Conduit Occupancy License or Application and Pole Attachment License form is approved for attachment, Make-Ready Work must be complete or a records or field survey has determined that Make-Ready Work is not required. Sprint shall submit with Sprint's License Application a proposed or estimated construction schedule as set forth below in Section 10. AT&T will process License Applications in the order in which they are received; provided, however, that when Sprint has multiple Applications on file with AT&T, Sprint may designate its desired priority of completion of Pre-License Surveys and Make-Ready Work with respect to all such Applications.

7.1.1 AT&T will review a complete Application and in the event of denial, will notify Sprint, in writing of such within forty-five (45) calendar days. In the event no denial is made within such forty-five (45) calendar day period, the Application will be deemed accepted.

7.1.2 Each Application for a License under this Section shall specify the proposed route of Sprint's Facilities and identify the Conduits and Ducts or Poles and Pole Facilities along the proposed route in which Sprint desires to place or attach its Facilities, and describe the physical size, weight and jacket material of the cable which Sprint desires to place in each Conduit or Duct or the number and type of cables, apparatus enclosures and other Facilities which Sprint desires to attach to each Pole.

7.1.3 Each Application for a License under this Section shall be accompanied by a proposed (or estimated) construction schedule containing the information specified below in 10.1 of this Agreement, and an indication of whether Sprint will, at its option, perform its own Make-Ready Work. If on the Application Sprint indicates that AT&T is to perform the Make-Ready Work, AT&T will provide Sprint with the Make-Ready Work estimate for approval by Sprint at Sprint's option. Sprint may proceed in accordance with section 5.

7.2 Multiple Cables, Multiple Services, Lashing or Placing Additional Cables, and Replacement of Facilities. Sprint may include multiple cables in a single License Application and multiple services (e.g., CATV and non-CATV services) may be provided by Sprint in the same cable sheath. Sprint's Lashing additional cable to existing Facilities and placing additional cables in Conduits or Ducts already occupied by Sprint's Facilities shall be permitted, and no additional fees will be applied; provided, however, that if Sprint desires to lash additional cable to existing Facilities of a Third Party, Sprint shall provide AT&T with reasonable notice, and shall obtain written permission from the Owner of the existing Facilities. If AT&T determines that the requested Lashing would violate safety or engineering requirements, AT&T shall provide written notice to Sprint within a reasonable time specifying in detail AT&T's findings. If Sprint desires to place additional cables in Conduits or Ducts which are already occupied, or to replace existing Facilities with new Facilities substantially different from those described in Licenses in effect, Sprint must apply for and acquire a new License specifically describing the physical size, weight and jacket material of the cable to be placed in AT&T's Conduits and Ducts or the physical size, weight, and jacket type of cables and the size and weight of apparatus enclosures and other Facilities to be attached to AT&T Poles.

7.3 Each party hereby designates the employees named below as their single point of contact for any and all purposes of this Section, including, but not limited to, processing Licenses and Applications and providing records and information. Each party may at any time designate a new point of contact by giving written notice of such change.

	Notices	**Billing Address**
To Licensee as follows:		
Contact	Alicia R Martin	Rachel Williams-Glenn
Title	Manager - Right of Way	Spv Project Admin
Company	Sprint Communications L.P.	Sprint Communications L.P.
Address	Mailstop: KSOPHT0101-Z2040	Attn: CRE-Lease Admin
Address	6391 Sprint Parkway	P.O. Box 12908
City, State, and Zip Code	Overland Park, KS 66251-2040	Shawnee Mission, KS 66251-2040
Telephone	913 315-4433	913 315-4416
Facsimile	913 315-3928	913 315-4459
with a copy to:	John Chapman	
	Attorney Sprint Legal Department	
	Mailstop: KSOPHT0101-Z2020	
	6391 Sprint Parkway	
	Overland Park, Kansas 66251-2020	
	Phone: 913 624-6442	
	Fax: 913 624-6388	
and to Licensor as follows:		
Contact	Arthur B. Williams	
Title	Manager	
Company	AT&T	
Address	North W3D2	
Address	3535 Colonnade Parkway	
City, State, and Zip Code	Birmingham, AL 35243	
Telephone	(205) 977-5068	
Facsimile	(205) 977-7997	

8. PROCESSING OF APPLICATIONS (INCLUDING PRELICENSE SURVEYS AND FIELD INSPECTIONS)

8.1 Sprint's Priorities. When Sprint has multiple Applications on file with AT&T, Sprint shall designate its desired priority of completion of Pre-License Surveys and Make-Ready Work with respect to all such Applications.

8.2 Pre-License Survey. After Sprint has submitted its written Application for a License, a Pre-License Survey (including a field inspection) will be performed by either party, in the company of a representative of the other party as mutually agreed, to determine whether AT&T's Poles, Anchors and Anchor/Guy Strands, or Conduit System, in their present condition, can accommodate Sprint's Facilities, without substantially interfering with the ability of AT&T or any other authorized person or entity to use or access the Pole, Anchor or Anchor/Guy Strand or any portion of AT&T's Conduit System or Facilities attached to AT&T's Pole or placed within or connected to AT&T's Conduit System. If Pre-License Survey is to be conducted by AT&T, AT&T will provide Sprint a Cost, based on its review of Licensee's Application request, to perform the Pre-License Survey. AT&T will submit to Sprint Costs to complete the Pre-License Survey; after receipt of Sprint's payment of Pre-License Survey Costs, AT&T will schedule the survey. AT&T agrees to perform Pre-License Survey Work at parity with itself and in the same timeframe within which AT&T would complete comparable work for its own, or its affiliates' own uses, and in a nondiscriminatory manner as among Licensees. If Sprint gives its prior written consent in writing, the determination of Duct availability may include the "rodding" of Ducts at Sprint's expense.

8.2.1 The purpose of the Pre-License Survey is to determine whether Sprint's proposed attachments to AT&T's Poles or Occupancy of AT&T's Conduit and Ducts will substantially interfere with use of AT&T's Facilities by AT&T and others with Facilities occupying, connected or attached to AT&T's Pole or Conduit System; and to provide information to Sprint for its determination of whether the Pole, Anchor, Anchor/Guy Strand, Conduit, Duct, or Right-of-Way is suitable for its use.

8.2.2 Based on information provided by AT&T, Sprint shall determine whether AT&T's Pole, Anchor, Anchor/Guy Strand, Conduit and Duct Facilities are suitable to meet Sprint's needs.

8.2.3 AT&T may not unreasonably refuse to continue to process an Application based on AT&T's determination that Sprint's proposed use of AT&T's Facilities will not be in compliance with applicable requirements, specifications, rules, regulations, ordinances, and laws. In the case of a dispute, the parties shall submit the issue for resolution pursuant to the procedures set forth for Dispute Resolution General Terms and Conditions, of this Agreement. Sprint shall be responsible for making its own, independent determination that its use of such Facilities will be in compliance with such requirements, specifications, rules, regulations, ordinances and laws. Sprint acknowledges that AT&T is not explicitly or implicitly warranting to Sprint that Sprint's proposed use of AT&T's Facilities will be in compliance with applicable requirements, specifications, rules, regulations, ordinances, and laws.

8.3 Administrative Processing. The administrative processing portion of the Pre-License Survey (which includes without limitation processing the Application, preparing Make-Ready Work orders, notifying Joint Users and other persons and entities of work requirements and schedules, coordinating the relocation/rearrangement of AT&T and/or other licensed Facilities) will be performed by AT&T at Sprint’s expense, Such expense shall be based on commercially reasonable estimates and will be provided to Sprint in advance pursuant to Section 8.2. Anything to the contrary herein notwithstanding, AT&T shall bear no responsibility for the relocation, rearrangement or removal of Facilities used for the transmission or distribution of electric power.

9. ISSUANCE OF LICENSES

9.1 Obligation to Issue Licenses. AT&T shall issue a License to Sprint pursuant to this 9.1. AT&T and Sprint acknowledge that each Application for a License shall be evaluated on an individual basis. Nothing contained in this section shall be construed as abridging any independent Pole attachment rights or Conduit or Duct access rights which Sprint may have under the provisions of any applicable federal or state laws or regulations governing access to AT&T's Poles, Conduits and Ducts, to the extent the same are not inconsistent with the Telecommunications Act of 1996. Each License issued hereunder shall be for an indefinite term, subject to Sprint's compliance with the provisions applicable to such License and further subject to Sprint's right to terminate such License at any time for any reason upon at least thirty (30) calendar days' prior written notice.

9.1.1 Intentionally left blank (BST standard moved to 5.1.1).

9.2 Multiple Applications. Sprint acknowledges that multiple parties including AT&T may seek to place their Facilities in AT&T's Conduit and Ducts or make attachments to Poles at or about the same time, that the Make-Ready Work required to prepare AT&T's Facilities to accommodate multiple applicants may differ from the Make-Ready Work required to accommodate a single applicant, that issues relating to the proper apportionment of Costs arise in multi-applicant situations that do not arise in single-applicant situations, and that cooperation and negotiations between all applicants and AT&T may be necessary to resolve disputes involving multiple Applications for permission to place Facilities in/on the same Pole, Conduit, Duct, or right-of-way.

9.2.1 All Applications will be processed on a first-come, first-served basis.

9.3 Agreement to Pay for All Make-Ready Work Completed. Sprint's submission of written authorization for Make-Ready Work shall also constitute Sprint's agreement to pay reasonable additional Cost-based charges, if any, for completed Make-Ready Work; provided, however, to the extent AT&T is also utilizing the facility and to the extent any modification is used to bring the Facilities into compliance with any applicable safety or other governmental requirement or to perform any necessary repairs, AT&T will be responsible for its share of the modification Cost.

9.4 Payments to Others for Expenses Incurred in Transferring or Arranging Their Facilities. Sprint shall make arrangements with the Owners of other Facilities located in or connected to AT&T's Conduit System or attached to AT&T's Poles, Anchors or Anchor/Guy Strands regarding reimbursement for any expenses incurred by them in transferring or rearranging their Facilities to accommodate the placement or attachment of Sprint's Facilities in or to AT&T's structures.

9.5 Intentionally left blank (BST standard moved to 6.1.1).

9.6 License. When Sprint's Application for a Pole attachment or Conduit Occupancy License is approved, and all required Make-Ready Work completed, AT&T will execute and return a signed authorization to Sprint, as appropriate, authorizing Sprint to attach or place the specified Facilities on AT&T's Poles or in AT&T's Conduit or Ducts.

9.6.1 Each License issued under this Section shall authorize Sprint to attach to AT&T's Poles or place or maintain in AT&T's Conduit or Ducts only those Facilities specifically described in the License, and no others.

9.6.2 Except as expressly stated to the contrary in individual Licenses issued hereunder, each License issued pursuant to this Section shall incorporate all terms and conditions of this Section whether or not such terms or conditions are expressly incorporated by reference on the face of the License itself.

10. CONSTRUCTION OF SPRINT'S FACILITIES

10.1 Construction Schedule. Sprint shall submit with Sprint's License Application a proposed or estimated construction schedule. Promptly after the issuance of a License permitting Sprint to attach Facilities to AT&T's Poles or place Facilities in AT&T's Conduit or Ducts, Sprint shall provide AT&T with an updated construction schedule and shall thereafter keep AT&T informed of significant anticipated changes in the construction schedule. Construction schedules required by this Section shall include, at a minimum, the following information:

10.1.1 The name, title, business address, and business telephone number of the manager responsible for construction of the Facilities;

10.1.2 The names of each contractor and subcontractor which will be involved in the construction activities;

10.1.3 The estimated dates when construction will begin and end; and

10.1.4 The approximate dates when Sprint or persons acting on Sprint's behalf will be performing construction work in connection with the placement of Sprint's Facilities in AT&T's Conduit or Ducts.

10.2 Additional Pre-construction Procedures for Facilities Placed in Conduit System. The following procedures shall apply before Sprint places Facilities in AT&T's Conduit System:

10.2.1 Sprint shall give written notice of the type of Facilities which are to be placed; and

10.2.2 AT&T shall designate the particular Duct or Ducts or Inner-ducts (if Available) to be occupied by Sprint's Facilities, the location and manner in which Sprint's Facilities will enter and exit AT&T's Conduit System, and the specific location and manner of installation of any associated equipment which is permitted by AT&T to occupy the Conduit System. Sprint may not occupy a Duct other than the specified Duct without the express written consent of AT&T. AT&T shall provide to Sprint space in Manholes for racking and storage of up to fifty (50) feet of cable, provided space is Available.

10.3 AT&T Not Responsible for Constructing or Placing Facilities. AT&T shall have no obligation to construct any Facilities for Sprint or to attach Sprint's Facilities to, or place Sprint's Facilities in, AT&T's Poles or Conduit System, except as may be necessary to facilitate the interconnection of unbundled network elements or except to the extent expressly provided in this Section, any License issued hereunder, or by the Telecommunications Act of 1996 or any other applicable law.

10.4 Sprint Responsible for Constructing, Attaching and Placing Facilities. Except where otherwise mutually agreed by Sprint and AT&T, Sprint shall be responsible for constructing its own Facilities and attaching those Facilities to, or placing them in AT&T's Poles, Conduit or Ducts at Sprint's sole Cost and expense. Sprint shall be solely responsible for paying all persons and entities who provide materials, labor, access to real or personal property, or other goods or services in connection with the construction and placement of Sprint's Facilities and for directing the activities of all persons acting on Sprint's behalf while they are physically present on AT&T's Pole, in any part of AT&T's Conduit System or in the vicinity of AT&T's Poles or Conduit System.

10.4.1 Intentionally left blank (BST standard moved to 3.6.6.1).

10.5 Compliance with Applicable Standards, Health and Safety Requirements, and Other Legal Requirements. Sprint shall construct its Facilities in accordance with the provisions of this Section and all Licenses issued hereunder.

10.5.1 Sprint shall construct, attach and place its Facilities in compliance with all Requirements and Specifications set forth above in this Agreement.

10.5.2 Sprint shall satisfy all legal requirements set forth above in this Agreement.

10.5.3 Sprint shall not permit any Person Acting on Sprint's Behalf to perform any work on AT&T's Poles or within AT&T's Conduit System without first verifying, to the extent practicable, on each date when such work is to be performed, that the condition of the Pole or Conduit System is suitable for the work to be performed. If Sprint or any person working on Sprint's behalf determines that the condition of the Pole or Conduit System is not suitable for the work to be performed, Sprint shall notify AT&T of the condition of the Pole or Conduit System in question and shall not proceed with construction activities until Sprint is satisfied that the work can be safely performed.

10.6 Construction Notices. If requested to do so, Sprint shall provide AT&T with information to reasonably assure AT&T that construction has been performed in accordance with all applicable standards and requirements.

10.7 Points for Attachment. AT&T shall specify, using the same selection criteria it uses for its own operating company, the point of attachment of each Pole or Anchor to be occupied by Sprint's Facilities. When the Facilities of more than one applicant are involved, AT&T will attempt, to the extent practicable, to designate the same relative position on each Pole or Anchor for each applicant's Facilities.

10.8 Manhole and Conduit Break-Outs. Sprint shall be permitted to add Conduit ports to AT&T Manholes when existing Conduits do not provide the pathway connectivity needed by Sprint; provided the structural integrity of the Manhole is maintained, and sound engineering judgment is employed.

10.9 Completion of Licensee Construction. For each Sprint attachment to or Occupancy within AT&T Facilities, Sprint will provide to AT&T's single-point of contact (within 60 calendar days of Sprint construction-complete date) a complete set of actual placement drawings for posting to AT&T records.

11. USE AND ROUTINE MAINTENANCE OF SPRINT'S FACILITIES

11.1 Use of Sprint's Facilities. Each License granted under this Section authorizes Sprint to have access to Sprint's Facilities on or in AT&T's Poles, Conduits and Ducts as needed for the purpose of serving Sprint's customers, including, but not limited to, powering electronics, monitoring Facilities, or transporting signaling.

11.2 Routine Maintenance of Sprint's Facilities. Each License granted under this Section authorizes Sprint to engage in routine maintenance of Sprint's Facilities located on or in AT&T's Poles, Conduits, Ducts and ROW pursuant to such License. Sprint shall give reasonable notice to the affected public authority or private landowner as appropriate before commencing the construction or installation of its attachments or making any material alterations thereto. Sprint shall give reasonable notice to AT&T before performing any work, whether or not of a routine nature, in AT&T's Conduit System.

11.3 Sprint Responsible for Maintenance of Sprint's Facilities. Sprint shall maintain its Facilities in accordance with the provisions of this Section (including but not limited to all requirements set forth above in this Agreement) and all Licenses issued hereunder. Sprint shall be solely responsible for paying all persons and entities who provide materials, labor, access to real or personal property, or other goods or services in connection with the maintenance of Sprint's Facilities and for directing the activities of all persons acting on Sprint's behalf while they are physically present on AT&T's Poles, within AT&T's Conduit System or in the immediate vicinity of such Poles or Conduit System.

11.4 AT&T Not Responsible for Maintaining Sprint's Facilities. AT&T shall have no obligation to maintain any Facilities which Sprint has attached or connected to, or placed in, AT&T's Poles, Conduits, Ducts or any portion of AT&T's Conduit System, except to the extent expressly provided by the provisions of this Section or any License issued hereunder, or by the Telecommunications Act of 1996 or other applicable laws, rules or regulations.

11.5 Information Concerning the Maintenance of Sprint's Facilities. Promptly after the issuance of a License permitting Sprint to attach Facilities to, or place Facilities in AT&T's Poles, Conduits or Ducts, Sprint shall provide AT&T with the name, title, business address, and business telephone number of the manager responsible for routine maintenance of Sprint's Facilities, and shall thereafter notify AT&T of changes to such information. The manager responsible for routine maintenance of Sprint's Facilities shall, on AT&T's request, identify any contractor, subcontractor, or other person performing maintenance activities on Sprint's behalf at a specified site and shall, on AT&T's request, provide such additional documentation relating to the maintenance of Sprint's Facilities as reasonably necessary to demonstrate that Sprint and all persons acting on Sprint's behalf are complying with the requirements of this Section and Licenses issued hereunder.

11.6 Identification of Personnel Authorized to Have Access to Sprint's Facilities. All personnel authorized to have access to Sprint's Facilities shall, while working on AT&T's Poles, in its Conduit System or Ducts or in the vicinity of such Poles, Ducts or Conduit Systems, carry with them suitable identification and shall, upon the request of any AT&T employee, produce such identification.

12. MODIFICATION AND REPLACEMENT OF SPRINT'S FACILITIES

12.1 Notification of Planned Modification or Replacement of Facilities. Sprint shall, when practicable, notify AT&T in writing at least 60 calendar days before adding to, relocating, replacing or otherwise modifying its Facilities attached to a AT&T Pole, Anchor or Anchor/Guy Strand or located in any AT&T Conduit or Duct. The notice shall contain sufficient information to enable AT&T to determine whether the proposed addition, relocation, replacement, or modification is permitted under Sprint's present License or requires a new or amended License.

12.2 New or Amended License Required. A new or amended License will be required if the proposed addition, relocation, replacement, or modification:

12.2.1 Requires that Sprint use additional space on AT&T's Poles or in its Conduits or Ducts (including but not limited to any additional Ducts, Inner-ducts, or substantial space in any handhole or Manhole) on either a temporary or permanent basis; or

12.2.2 Results in the size or location of Sprint's Facilities on AT&T's Poles or in its Conduit or Ducts being appreciably different from those described and authorized in Sprint's present License (e.g. different Duct or size increase causing a need to re-calculate storm loadings, guying, or Pole class).

13. REARRANGEMENT OF FACILITIES AT THE REQUEST OF ANOTHER

13.1 Make-Ready Work at the Request of Sprint. If, prior to the issuance of a License, Sprint determines that any Pole, Anchor, Anchor/Guy Strand, Conduit or Duct is inadequate to accommodate Sprint's proposed Pole attachment or Conduit Occupancy or that it will be necessary or desirable for AT&T or any other person or entity to rearrange existing Facilities or structures to accommodate Sprint, Sprint shall promptly advise AT&T of the Make-Ready Work it believes necessary to enable the accommodation of Sprint's Facilities.

13.1.1 AT&T shall determine, in the exercise of sound engineering judgment, whether or what Make-Ready Work is necessary or possible. In determining whether Make-Ready Work is necessary or what Make-Ready Work is necessary, AT&T shall endeavor to minimize its Costs to Sprint. If it is determined that such Make-Ready Work is required, AT&T shall provide Sprint with the estimated Cost for Make-Ready Work within 30 calendar days of such determination.

13.1.2 Sprint shall be solely responsible for negotiating with persons or entities other than AT&T for the rearrangement of such persons' or entities' Facilities or structures and, except where such rearrangement is for the benefit of AT&T and/or other Licensees as well as Sprint, shall be solely responsible for paying all charges attributable to the rearrangement of such Facilities; provided, however, that if Facilities rearrangements require new Licenses from AT&T, AT&T shall issue such Licenses in conjunction with the issuance of the applied-for License to Sprint. In the event Sprint encounters problems with Licensees failing to rearrange said Facilities in a timely manner AT&T will request that Licensee rearrange its Facilities at Sprint's expense.

13.2 Rearrangement of Sprint's Facilities at AT&T's Request. Sprint acknowledges that, from time to time, it may be necessary or desirable for AT&T to change out Poles, relocate, reconstruct, or modify portions of its Conduit System or rearrange Facilities contained therein or connected thereto and that such changes may be necessitated by AT&T's business needs or authorized Application of another entity seeking access to AT&T's Poles or Conduit Systems. Sprint agrees that Sprint will, upon AT&T's request, and at AT&T's expense, but at no Cost to Sprint, participate with AT&T (and other Licensees) in the relocation, reconstruction, or modification of AT&T's Conduit System or Facilities rearrangement. Sprint acknowledges that, from time to time, it may be necessary or desirable for AT&T to change out Poles, relocate, reconstruct, or modify portions of its Conduit System or rearrange Facilities contained therein or connected thereto as a result of an order by a municipality or other governmental authority. Sprint shall, upon AT&T's request, participate with AT&T (and other Licensees) in the relocation, reconstruction, or modification of AT&T's Conduit System or Facilities rearrangement and pay its proportionate share of any Costs of such relocation, reconstruction, or modification that are not reimbursed by such municipality or governmental authority.

13.2.1 Sprint shall make all rearrangements of its Facilities within such period of time as is jointly deemed reasonable by the parties based on the amount of rearrangements necessary and a desire to minimize chances for service interruption or facility-based service denial to a Sprint customer.

13.2.2 If Sprint fails to make the required rearrangements within the time prescribed or within such extended periods of time as may be granted by AT&T in writing, AT&T may perform such rearrangements with written notice to Sprint, and Sprint shall reimburse AT&T for actual Costs and expenses incurred by AT&T in connection with the rearrangement of Sprint's Facilities; provided, however, that nothing contained in this Section or any License issued hereunder shall be construed as requiring Sprint to bear any expenses which, under the Telecommunications Act of 1996 or other applicable federal or state laws or regulations, are to be allocated to persons or entities other than Sprint; and provided further, however, that Sprint shall have no responsibility for rearrangement costs and expenses relating to rearrangements performed for the purpose of meeting AT&T's business needs.

14. EMERGENCY REPAIRS AND POLE REPLACEMENTS

14.1 Sprint Responsible for Emergency Repairs to its Own Facilities. In general, Sprint shall be responsible for making emergency repairs to its own Facilities and for formulating appropriate plans and practices which will enable it to make such emergency repairs. AT&T shall be under no obligation to perform any repair or service restoration work of any kind with respect to Sprint's Facilities.

15. INSPECTION BY AT&T OF SPRINT'S FACILITIES

15.1 AT&T's Right to Make Periodic or Spot Inspections. AT&T shall have the right to make periodic or spot inspections at any time of any part of Sprint's Facilities attached to AT&T's Poles, Anchors or Anchor/Guy Strands or occupying any AT&T Conduit or Duct for the limited purpose of determining whether Sprint's Facilities are in compliance with the terms of this Section and Licenses hereunder; provided that such inspections must be non-invasive (e.g., no splice cases may be opened).

15.1.1 AT&T will give Sprint advance written notice of such inspections, and Sprint shall have the right to have a representative attend such inspections, except in those instances where safety considerations justify the need for such inspection without the delay of waiting until written notice has been forwarded to Sprint.

15.1.2 Such inspections shall be conducted at AT&T's expense; provided, however, that Sprint shall bear the Cost of inspections as delineated in 3.12.

15.2 No Duty to Sprint. Neither the act of inspection by AT&T of Sprint's Facilities nor any failure to inspect such Facilities shall operate to impose on AT&T any liability of any kind whatsoever or to relieve Sprint of any responsibility, obligations or liability under this Section or otherwise existing.

16. NOTICE OF NONCOMPLIANCE

16.1 Notice of Noncompliance. If, at any time, AT&T determines that Sprint's Facilities or any part thereof have not been placed or maintained or are not being used in accordance with the requirements of this Agreement, AT&T may send written notice to Sprint specifying the alleged noncompliance. Sprint agrees to acknowledge receipt of the notice as soon as practicable. If Sprint does not dispute AT&T's assertion that such Facilities are not in compliance, Sprint agrees to provide AT&T with a schedule for bringing such Facilities into compliance, to bring the Facilities into compliance within a reasonable time, and to notify AT&T in writing when the Facilities have been brought into compliance.

16.2 Disputes over Alleged Noncompliance. If Sprint disputes AT&T's assertion that Sprint's Facilities are not in compliance, Sprint shall notify AT&T in writing of the basis for Sprint's assertion that its Facilities are in compliance.

16.3 Failure to Bring Facilities into Compliance. If Sprint has not brought the Facilities into compliance within a reasonable time or provided AT&T with proof sufficient to persuade AT&T that AT&T erred in asserting that the Facilities were not in compliance, and if AT&T determines in good faith that the alleged noncompliance causes or is likely to cause material damage to AT&T's Facilities or those of other users, AT&T may, at its option and Sprint's expense, take such non-service affecting steps as may be required to bring Sprint's Facilities into compliance, including but not limited to correcting any conditions which do not meet the specifications of this Agreement.

16.4 Correction of Conditions by AT&T. If AT&T elects to bring Sprint's Facilities into compliance, the provisions of this Section shall apply.

16.4.1 AT&T will, whenever practicable, notify Sprint in writing before performing such work. The written notice shall describe the nature of the work to be performed and AT&T's schedule for performing the work.

16.4.2 If Sprint's Facilities have become detached or partially detached from supporting racks or wall supports located within a AT&T Manhole, AT&T may, at Sprint's expense, reattach them but shall not be obligated to do so. If AT&T does not reattach Sprint's Facilities, AT&T shall endeavor to arrange with Sprint for the reattachment of any Facilities affected.

16.4.3 AT&T shall, as soon as practicable after performing the work, advise Sprint in writing of the work performed or action taken. Upon receiving such notice, Sprint shall inspect the Facilities and take such steps as Sprint may deem necessary to insure that the Facilities meet Sprint's performance requirements.

16.5 Sprint to Bear Expenses. Sprint shall bear all expenses arising out of or in connection with any work performed to bring Sprint's Facilities into compliance with this Section; provided, however that nothing contained in this Section or any License issued hereunder shall be construed as requiring Sprint to bear any expenses which, under applicable federal or state laws or regulations, must be borne by persons or entities other than Sprint. Disputes between the parties concerning charges by AT&T to Sprint pursuant to Section 16.3 of this Attachment shall be resolved in accordance with the procedures set forth for Dispute Resolution in the General Terms and Conditions of this Agreement.

17. UNAUTHORIZED OCCUPANCY OR UTILIZATION OF AT&T'S FACILITIES

17.1 Licensing or Removal of Unauthorized Attachments. If any of Sprint's attachments shall be found attached to Pole(s) or occupying Conduit Systems for which no License is outstanding, AT&T, without prejudice to its other rights or remedies under this Agreement, including termination of Licenses, may impose a charge and require Sprint to submit in writing, within thirty (30) calendar days after receipt of written notification from AT&T of the unauthorized attachment or Conduit Occupancy, a Pole attachment or Conduit Occupancy License Application. If such Application is not received by AT&T within the specified time period, Sprint may be required at AT&T's option to remove its unauthorized attachment or Occupancy within sixty (60) calendar days of the final date for submitting the required Application, or AT&T may at AT&T's option remove Sprint's Facilities without liability, and the expense of such removal shall be borne by Sprint. Charges for any such unauthorized Occupancy shall be equal to the applicable License fees and charges which would have been payable from and after the date such Facilities were first placed on AT&T's Poles or in AT&T's Conduit System if Sprint provides reasonable documentation of such placement. If Sprint is unable to provide such reasonable documentation the matter may be submitted to the Dispute Resolution Procedures set forth in General Terms and Conditions of this Agreement.

17.1.1 Nothing contained in the Agreement or any License issued hereunder shall be construed as requiring Sprint to bear any expenses which, under applicable federal or state laws or regulations, must be borne by persons or entities other than Sprint.

17.2 Prompt Payment of Applicable Fees and Charges. Fees and charges for Pole attachments and Conduit System occupancies, as specified herein and as modified from time to time, shall be due and payable immediately for unauthorized Pole attachments or Conduit Occupancy, whether or not Sprint is permitted to continue such unauthorized Pole attachment or Conduit System Occupancy. See Appendix I for applicable annual rental fees.

17.3 No Implied Waiver or Ratification of Unauthorized Use. No act or failure to act by AT&T with regard to said unlicensed use shall be deemed as a ratification of the unlicensed use; and if any License should be subsequently issued, said License shall not operate retroactively or constitute a waiver by AT&T of any of its rights or privileges under this Agreement or otherwise; provided, however, that Sprint shall be subject to all liabilities, obligations and responsibilities of this attachment in regard to said unauthorized use from its inception.

18. REMOVAL OF SPRINT'S FACILITIES

18.1 Pole Attachments. Sprint, at its expense, will remove its attachments from any of AT&T's Poles within thirty (30) calendar days after termination of the License covering such attachments or as mutually agreed to between AT&T and Sprint. If Sprint fails to remove its attachments within such thirty (30) calendar day period or as mutually agreed to between AT&T and Sprint, AT&T shall have the right to remove such attachments at Sprint's expense and without any liability on the part of AT&T for damage or injury to Sprint's attachments unless caused by the negligence or intentional misconduct of AT&T.

18.2 Conduit Occupancy. Sprint, at its expense, will remove its communications Facilities from a Conduit System within sixty (60) calendar days after:

18.2.1 Termination of the License covering such Conduit Occupancy; or

18.2.2 The date Sprint replaces its existing Facilities in one Duct with substitute Facilities in another Duct.

18.2.3 In the event that Sprint elected to have unused or abandoned Facilities removed pursuant to section 2.8.4 of this Attachment, Sprint shall not be required to remove its Facilities from such Conduit System as required by section 18.2 to the extent such Sprint Facilities are of a similar quantity and nature to the Facilities removed. In such event, Sprint will be required to tag or otherwise physically identify the Facilities as abandoned or having been removed from service by Sprint.

18.2.3 If Sprint fails to remove its Facilities within the specified period, AT&T shall have the right to remove such Facilities at Sprint's expense and without any liability on the part of AT&T for damage or injury to such Facilities unless caused by the negligence or intentional misconduct of AT&T.

18.3 Continuing Responsibility for Fees and Charges. Sprint shall remain liable for and pay to AT&T all fees and charges pursuant to provisions of this attachment until all of Sprint's Facilities are physically removed from AT&T's Poles or Conduit System.

19. FEES, CHARGES, AND BILLING

19.1 License Charges. Sprint agrees to pay charges in Appendix 1 of this Attachment. These rates will be recalculated during the term of this Agreement in accordance with the Telecommunications Act of 1996 and applicable FCC or state Commission rules and regulations. License charges commence on the first day of the calendar month following the date a License is issued. Such charges cease as of the final day of the calendar month preceding the month in which the attachment or Occupancy is physically removed or the utilization is discontinued. A one-month minimum charge is applicable to all Licenses. Such current-year charges are normally billed on or near July 1 of each year; annual billing is for the period January 1 through December 31 (six (6) months in arrears and six (6) months in advance) and to include true-up for actual billing for previous year's advance billing for period July 1 through December 31.

19.2 Notice of Rate and Computation of Charges. On or about November 1 of each year, AT&T will notify Sprint by certified mail, return receipt requested, of the rental rate and Pole transfer rate to be applied in the subsequent calendar year. The letter of notification shall be incorporated in, and governed by, the terms and conditions of this Agreement. Attachment and Occupancy rates shall be applied to the number of Pole(s) and Duct feet of Conduit for which Licenses have been issued before December 1 of each calendar year. Charges for attachment(s) and Occupancy which commenced during the preceding twelve (12) month period will be prorated accordingly.

20. ADVANCE PAYMENT AND IMPUTATION

20.1 Attachment and Occupancy Fees. Fees for Pole attachment and Conduit Occupancy shall be based on the Facilities for which Licenses have been issued as of the date of billing by AT&T, shall be computed as set forth herein.

20.1.1 Charges associated with newly licensed attachments or occupancies and other attachments or occupancies of less than the entire annual billing period shall be prorated.

20.1.2 Charges shall be prorated retroactively in the event of the removal of Sprint's Facilities.

20.1.3 The amount of any advance payment required shall be due within sixty (60) calendar days after receipt of an invoice from AT&T.

20.2 Imputation. AT&T shall impute to its costs of providing telecommunications services (and charge any affiliate, subsidiary, or associate company engaged in the provision of such services) an equal amount to the charges set forth in this Section for all of the Conduits, Ducts, and Poles it occupies and uses.

21. ASSURANCE OF PAYMENT

21.1 Necessity and Level of Security. In the event Sprint fails to timely satisfy its financial obligations under this Attachment, Sprint may be required to furnish a bond, letter of credit or other evidence of financial security having a minimum face amount of $10,000.00 per state or $50,000.00 per region. Such bond, letter of credit or other security shall be in a form satisfactory to AT&T and may be increased from time to time as reasonably required by AT&T to guarantee the performance of all obligations of Sprint hereunder. The amount of the bond, letter of credit or other security shall not operate as a limitation upon the obligations of Sprint hereunder.

22. INSURANCE

22.1 Sprint shall obtain and maintain insurance, insuring the contractual liability and indemnification provisions of this Attachment, issued by an insurance carrier reasonably satisfactory to Licensor to protect the Licensor, other authorized Licensees, and Joint User(s) from and against claims, demands, causes of action, judgments, costs, including reasonable attorneys' fees, expenses and liabilities of which may arise or result, directly or indirectly from or by reason of such loss, injury or damage as covered in this Attachment.

22.2 Sprint shall maintain the following amounts of insurance:

22.2.1 Commercial General Liability Insurance with limits of not less than $1,000,000 per occurrence and $1,000,000 annual aggregate.

22.2.2 Umbrella or Excess Liability Insurance with limits of not less than $10,000,000 per occurrence and in the aggregate.

22.2.3 Business auto coverage for all owned, non-owned, hired and leased vehicles with limits of not less than $1,000,000 per occurrence and in the aggregate.

22.2.4 Sprint shall name AT&T as an additional insured on the general liability policy with respect to the terms and conditions of this attachment.

22.3 Sprint shall submit to AT&T certificates by each company insuring Sprint with respect to any insurance required hereunder, such certificate(s) to specify the coverage provided and that such company will not cancel or materially change any such policy of insurance issued to Sprint except after thirty (30) calendar days written notice to AT&T.

22.4 Sprint shall also carry such insurance as will protect it from claims under any Worker's Compensation Law in effect that may be applicable to it as a result of work performed pursuant to this Attachment.

22.5 All insurance required in accordance with 22.2) and 22.3) preceding must be effective before AT&T will authorize attachment to a Pole and/or Anchor, or Occupancy of a Conduit System and shall remain in force until such Sprint's Facilities have been removed from all such Pole(s), Anchor(s), Conduit System, or Right of Way. In the event that Sprint shall fail to maintain the required insurance coverage, AT&T may pay any premium thereon falling due, and Sprint shall forthwith reimburse AT&T for any such premium paid, but only for the pro-rata period of noncompliance.

22.6 Intentionally left blank

22.7 Intentionally left blank

23. DAMAGE TO FACILITIES

23.1 Licensor shall exercise precaution to avoid damaging the communications Facilities of the Licensee and shall make an immediate report to the Licensee of the occurrence of any such damage caused by its employees, agents or contractors.

23.2 Licensee shall exercise precaution to avoid damaging the Facilities of Licensor and of others attached to Pole(s), Anchor(s), or occupying a Conduit System and shall make an immediate report to the Owner of the occurrence of any such damage caused by Licensee's employees, agents or contractors.

23.3 Intentionally left blank

23.4 Intentionally left blank

23.5 Intentionally left blank

23.6 Intentionally left blank

24. AUTHORIZATION NOT EXCLUSIVE

24.1 Nothing herein contained shall be construed as a grant of any exclusive authorization, right or privilege to Sprint. AT&T shall have the right to grant, renew and extend rights and privileges to others not parties to this Agreement, by contract or otherwise, to use any Pole, Anchor, or Conduit System covered by this Attachment and Sprint's rights hereunder.

25. ASSIGNMENT OF RIGHTS

25.1 Intentionally left blank

25.2 Intentionally left blank

26. FAILURE TO ENFORCE

26.1 Intentionally left blank

27. TERM OF AGREEMENT

27.1 Intentionally left blank

27.2 Intentionally left blank

28. SUPERSEDURE OF PREVIOUS AGREEMENT(S)

28.1 All currently effective Licenses heretofore granted pursuant to such previous agreements shall be subject to the terms and conditions of this Agreement.

APPENDIX I

2006 FCC Formula Supported Fees

for attachments and/or occupancy effective 1/1/2006

(Re-calculated annually)

Licensee shall pay to Licensor the following fees:

State	Poles (ea. / yr.)		Anchors (ea. / yr.)	Conduit	
					($ / ft. / yr.)
	Non-Urban	Urban			
Alabama	$9.24	$6.13	Same as poles		$0.16
Kentucky ①					$0.70
2-user	$ 9.45	$9.45	$12.90		
3-user	$5.35	$5.35	$8.60		
Louisiana	$6.90③	$6.90③			$0.37
Mississippi	$7.57	$5.02			$ 2.50 ②
Tennessee	$10.91	$7.24			$0.26
Florida	$8.10	$5.37			$0.31
			Miami River crossing		$17.13
Georgia	$8.87	$5.88			$0.22
North Carolina	$7.58	$5.03			$0.24
South Carolina	$5.31	$3.52			$0.24

① Kentucky rates are currently equal to tariff rates; to be re-calculated annually per FCC formula

② Tariff rate in Mississippi

③ Louisiana pole rates are determined by the Louisiana PSC.

Urban and non-urban are defined by the Bureau of Census as follows: Urban is a city plus the closely-settled urban fringe that together has a minimum population of 50,000. Non-urban is less than 50,000.

Conduit rates will apply to each passageway (innerduct).

i) For the purpose of determining the Duct feet chargeable, the Duct considered occupied shall be measured from the center to center of adjacent Manhole(s), or from the center of a Manhole to the end of a Duct not terminated in a Manhole.

ii) The above rates are not applicable for crossings of any navigable waterway. Rates for navigable waterway crossings will be calculated on an individual case basis.

iii) The rates set forth above for attachments will apply to wireless attachments only if there are no apparatus cabinets and antennae attached to the pole On poles where apparatus cabinets and antennae are attached,

a flat annual rate of per pole will apply. The rates are $23.34(AL), $25.35 (KY), $21.35 (LA), $19.12 (MS), $27.57 (TN), $20.47 (FL), $22.41, (GA), $19.15, (NC) and $13.42 (SC).This flat rate will be reviewed annually by AT&T and AT&T and Licensee will amend this Agreement to reflect the new rate proposed by AT&T.

ole Attachment Transfer Rate

er Pole (throughout AT&T region)	$41.00

Appendix II

Records Maintenance Centers

For **all states.**

Plant Records	Right of Way Records
Records Maintenance Center 5228 Central Avenue Charlotte, NC 28212	Regional Landbase Admin. Center Attn.: Right of Way Records 16 GG 1 BST 301 W. Bay Street Jacksonville, FL 32201

EXHIBIT I

ADMINISTRATIVE FORMS AND NOTICES

Administrative forms and notices can be obtained at AT&T's web site located at http://interconnection.AT&T.com/.

At the menu screen, select the following:

1) Tools, Forms & Reports

2) Poles, Ducts, Conduits & Rights of Way

Attachment 9

Performance Measurements

Performance Measurements

Upon a particular Commission's issuance of an Order pertaining to Performance Measurements in a proceeding expressly applicable to all CLECs generally, AT&T shall implement in that state such Performance Measurements as of the date specified by the Commission. Performance Measurements that have been Ordered in a particular state can currently be accessed via the internet at http://pmap.bellsouth.com.

Attachment 10

AT&T Disaster Recovery Plan

CONTENTS

PAGE

1.0 Purpose 3
2.0 Single Point of Contact 3
3.0 Identifying the Problem 3
3.1 Site Control 4
3.2 Environmental Concerns 5
4.0 The Emergency Control Center (ECC) 5
5.0 Recovery Procedures 6
5.1 CLEC Outage 6
5.2 AT&T Outage 6
5.2.1 Loss of Central Office 7
5.2.2 Loss of a Central Office with Serving Wire Center Functions 7
5.2.3 Loss of a Central Office with Tandem Functions 7
5.2.4 Loss of a Facility Hub 8
5.3 Combined Outage (CLEC and AT&T Equipment) 8
6.0 T1 Identification Procedures 8
7.0 Acronyms 8

1.0 PURPOSE

In the unlikely event of a disaster occurring that affects AT&T's long-term ability to deliver traffic to a CLEC, general procedures have been developed by AT&T to hasten the recovery process in accordance with the Telecommunications Service Priority (TSP) Program established by the FCC to identify and prioritize telecommunication services that support national security or emergency preparedness (NS/EP) missions. A description of the TSP Program as it may be amended from time to time is available on the following AT&T Interconnection Services Web site. Since each location is different and could be affected by an assortment of potential problems, a detailed recovery plan is impractical. However, in the process of reviewing recovery activities for specific locations, some basic procedures emerge that appear to be common in most cases.

These general procedures should apply to any disaster that affects the delivery of traffic for an extended time period. Each CLEC will be given the same consideration during an outage, and service will be restored as quickly as possible.

This document will cover the basic recovery procedures that would apply to every CLEC.

2.0 SINGLE POINT OF CONTACT

When a problem is experienced, regardless of the severity, the AT&T Network Management Center (NMC) will observe traffic anomalies and begin monitoring the situation. Controls will be appropriately applied to insure the sanity of AT&T's network; and, in the event that a switch or facility node is lost, the NMC will attempt to circumvent the failure using available reroutes.

AT&T's NMC will remain in control of the restoration efforts until the problem has been identified as being a long-term outage. At that time, the NMC will contact AT&T's ECC and relinquish control of the recovery efforts. Even though the ECC may take charge of the situation, the NMC will continue to monitor the circumstances and restore traffic as soon as damaged network elements are revitalized.

The telephone number for the AT&T Network Management Center in Atlanta, as published in Telcordia's National Network Management Directory, is 404-321-2516.

3.0 IDENTIFYING THE PROBLEM

During the early stages of problem detection, the NMC will be able to tell which CLECs are affected by the catastrophe. Further analysis and/or first hand observation will determine if the disaster has affected CLEC equipment only, AT&T equipment only or a combination. The initial restoration activity will be largely determined by the equipment that is affected.

Once the nature of the disaster is determined and after verifying the cause of the problem, the NMC will initiate reroutes and/or transfers that are jointly agreed upon by the affected CLECs' Network Management Center and the AT&T NMC. The type and percentage of controls used will depend upon available network capacity. Controls necessary to stabilize the situation will be invoked and the NMC will attempt to re-establish as much traffic as possible.

For long-term outages, recovery efforts will be coordinated by the ECC. Traffic controls will continue to be applied by the NMC until facilities are re-established. As equipment is made available for service, the ECC will instruct the NMC to begin removing the controls and allow traffic to resume.

3.1 SITE CONTROL

In the total loss of building use scenario, what likely exists will be a smoking pile of rubble. This rubble will contain many components that could be dangerous. It could also contain any personnel on the premises at the time of the disaster. For these reasons, the local fire marshal with the assistance of the police will control the site until the building is no longer a threat to surrounding properties and the companies have secured the site from the general public.

During this time, the majority owner of the building should be arranging for a demolition contractor to mobilize to the site with the primary objective of reaching the cable entrance facility for a damage assessment. The results of this assessment would then dictate immediate plans for restoration, both short term and permanent.

In a less catastrophic event, i.e., the building is still standing and the cable entrance facility is usable, the situation is more complex. The site will initially be controlled by local authorities until the threat to adjacent property has diminished. Once the site is returned to the control of the companies, the following events should occur.

An initial assessment of the main building infrastructure systems (mechanical, electrical, fire and life safety, elevators, and others) will establish building needs. Once these needs are determined, the majority owner should lead the building restoration efforts. There may be situations where the site will not be totally restored within the confines of the building. The companies must individually determine their needs and jointly assess the cost of permanent restoration to determine the overall plan of action.

Multiple restoration trailers from each company will result in the need for designated space and installation order. This layout and control is required to maximize the amount of restoration equipment that can be placed at the site, and the priority of placements.

Care must be taken in this planning to ensure other restoration efforts have logistical access to the building. Major components of telephone and building equipment will need to be removed and replaced. A priority for this equipment must also be jointly established to facilitate overall site restoration. (Example: If the AC switchgear has sustained damage, this would be of the highest priority in order to regain power, lighting, and HVAC throughout the building.)

If the site will not accommodate the required restoration equipment, the companies would then need to quickly arrange with local authorities for street closures, rights of way or other possible options available.

3.2 ENVIRONMENTAL CONCERNS

In the worse case scenario, many environmental concerns must be addressed. Along with the police and fire marshal, the state environmental protection department will be on site to monitor the situation.

Items to be concerned with in a large central office building could include:

1. Emergency engine fuel supply. Damage to the standby equipment and the fuel handling equipment could have created "spill" conditions that have to be handled within state and federal regulations.

2. Asbestos-containing materials that may be spread throughout the wreckage. Asbestos could be in many components of building, electrical, mechanical, outside plant distribution, and telephone systems.

3. Lead and acid. These materials could be present in potentially large quantities depending upon the extent of damage to the power room.

4. Mercury and other regulated compounds resident in telephone equipment.

5. Other compounds produced by the fire or heat.

Once a total loss event occurs at a large site, local authorities will control immediate clean up (water placed on the wreckage by the fire department) and site access.

At some point, the companies will become involved with local authorities in the overall planning associated with site clean up and restoration. Depending on the clean up approach taken, delays in the restoration of several hours to several days may occur.

In a less severe disaster, items listed above are more defined and can be addressed individually depending on the damage.

In each case, the majority owner should coordinate building and environmental restoration as well as maintain proper planning and site control.

4.0 THE ECC

The ECC is located in the Midtown 1 Building in Atlanta, Georgia. During an emergency, the ECC staff will convene a group of pre-selected experts to inventory the damage and initiate corrective actions. These experts have regional access to AT&T's personnel and equipment and will assume control of the restoration activity anywhere in the nine-state area.

In the past, the ECC has been involved with restoration activities resulting from hurricanes, ice storms and floods. They have demonstrated their capabilities during these calamities as well as

during outages caused by human error or equipment failures. This group has an excellent record of restoring service as quickly as possible.

During a major disaster, the ECC may move emergency equipment to the affected location, direct recovery efforts of local personnel and coordinate service restoration activities with the CLECs. The ECC will attempt to restore service as quickly as possible using whatever means is available, leaving permanent solutions, such as the replacement of damaged buildings or equipment, for local personnel to administer.

Part of the ECC's responsibility, after temporary equipment is in place, is to support the NMC efforts to return service to the CLECs. Once service has been restored, the ECC will return control of the network to normal operational organizations. Any long-term changes required after service is restored will be made in an orderly fashion and will be conducted as normal activity.

5.0 RECOVERY PROCEDURES

The nature and severity of any disaster will influence the recovery procedures. One crucial factor in determining how AT&T will proceed with restoration is whether or not AT&T's equipment is incapacitated. Regardless of whose equipment is out of service, AT&T will move as quickly as possible to aid with service recovery; however, the approach that will be taken may differ depending upon the location of the problem.

5.1 CLEC OUTAGE

For a problem limited to one CLEC (or a building with multiple CLECs), AT&T has several options available for restoring service quickly. For those CLECs that have agreements with other CLECs, AT&T can immediately start directing traffic to a provisional CLEC for completion. This alternative is dependent upon AT&T having concurrence from the affected CLECs.

Whether or not the affected CLECs have requested a traffic transfer to another CLEC will not impact AT&T's resolve to re-establish traffic to the original destination as quickly as possible.

5.2 AT&T OUTAGE

Because AT&T's equipment has varying degrees of impact on the service provided to the CLECs, restoring service from damaged AT&T equipment is different. The outage will probably impact a number of Carriers simultaneously. However, the ECC will be able to initiate immediate actions to correct the problem.

A disaster involving any of AT&T's equipment locations could impact the CLECs, some more than others. A disaster at a Central Office (CO) would only impact the delivery of traffic to and from that one location, but the incident could affect many Carriers. If the CO is a Serving Wire Center (SWC), then traffic from the entire area to those Carriers served from that switch would also be impacted. If the switch functions as an Access Tandem, or there is a tandem in the building, traffic from every CO to every CLEC could be interrupted. A disaster that destroys a facility hub could disrupt various traffic flows, even though the switching equipment may be unaffected.

The NMC would be the first group to observe a problem involving AT&T's equipment. Shortly after a disaster, the NMC will begin applying controls and finding re-routes for the completion of as much traffic as possible. These reroutes may involve delivering traffic to alternate Carriers upon receiving approval from the CLECs involved. In some cases, changes in translations will be required. If the outage is caused by the destruction of equipment, then the ECC will assume control of the restoration.

5.2.1 Loss of a CO

When AT&T loses a CO, the ECC will

a) Place specialists and emergency equipment on notice;

b) Inventory the damage to determine what equipment and/or functions are lost;

c) Move containerized emergency equipment and facility equipment to the stricken area, if necessary;

d) Begin reconnecting service on a parity basis for Hospitals, Police and other emergency agencies or customers served by AT&T or CLEC in accordance with the TSP priority restoration coding scheme entered in the AT&T Maintenance database immediately prior to the emergency.

5.2.2 Loss of a CO with SWC Functions

The loss of a CO that also serves as a SWC will be restored as described in Section 5.2.1.

5.2.3 Loss of a CO with Tandem Functions

When AT&T loses a CO building that serves as an Access Tandem and as a SWC, the ECC will

a) Place specialists and emergency equipment on notice;

b) Inventory the damage to determine what equipment and/or functions are lost;

c) Move containerized emergency equipment and facility equipment to the stricken area, if necessary;

d) Begin reconnecting service on a parity basis for Hospitals, Police and other emergency agencies or customers served by AT&T or CLEC in accordance with the TSP priority restoration coding scheme entered in the AT&T Maintenance database immediately prior to the emergency;

e) Re-direct as much traffic as possible to the alternate access tandem (if available) for delivery to those CLECs utilizing a different location as a SWC;

f) Begin aggregating traffic to a location near the damaged building. From this location, begin re-establishing trunk groups to the CLECs for the delivery of traffic normally found on the direct trunk groups. (This aggregation point may be the alternate access tandem location or another CO on a primary facility route.)

5.2.4 Loss of a Facility Hub

In the event that AT&T loses a facility hub, the recovery process is much the same as above. Once the NMC has observed the problem and administered the appropriate controls, the ECC will assume authority for the repairs. The recovery effort will include

a) Placing specialists and emergency equipment on notice;

b) Inventorying the damage to determine what equipment and/or functions are lost;

c) Moving containerized emergency equipment to the stricken area, if necessary;

d) Reconnecting service on a parity basis for Hospitals, Police and other emergency agencies or customers served by AT&T or CLEC in accordance with the TSP priority restoration coding scheme entered in the AT&T Maintenance database immediately prior to the emergency; and

e) If necessary, AT&T will aggregate the traffic at another location and build temporary facilities. This alternative would be viable for a location that is destroyed and building repairs are required.

5.3 COMBINED OUTAGE (CLEC AND AT&T EQUIPMENT)

In some instances, a disaster may impact AT&T's equipment as well as the CLECs'. This situation will be handled in much the same way as described in Section 5.2.3. Since AT&T and the CLECs will be utilizing temporary equipment, close coordination will be required.

6.0 T1 IDENTIFICATION PROCEDURES

During the restoration of service after a disaster, AT&T may be forced to aggregate traffic for delivery to a CLEC. During this process, T1 traffic may be consolidated onto DS3s and may become unidentifiable to the Carrier. Because resources will be limited, AT&T may be forced to "package" this traffic entirely differently than normally received by the CLECs. Therefore, a method for identifying the T1 traffic on the DS3s and providing the information to the Carriers is required.

7.0 ACRONYMS

CLEC	-	Competitive Local Exchange Carrier
CO	-	Central Office (AT&T)
DS3	-	Facility that carries 28 T1s (672 circuits)
ECC	-	Emergency Control Center (AT&T)
NMC	-	Network Management Center
SWC	-	Serving Wire Center (AT&T switch)
T1	-	Facility that carries 24 circuits
TSP	-	Telecommunications Service Priority

Hurricane Information

During a hurricane, AT&T will make every effort to keep CLECs updated on the status of our network. Information centers will be set up throughout AT&T. These centers are not intended to be used for escalations, but rather to keep the CLEC informed of network related issues, area damages and dispatch conditions, etc.

Hurricane-related information can also be found on AT&T's Interconnection Web site by clicking on the link "Relief Information, in the special alert box located on the Web page. Additionally, information concerning Mechanized Disaster Reports can be found by clicking on the link "Click here for information concerning Disaster Recovery Reports" on the Hurricane Relief Page.

BST Disaster Management Plan

AT&T maintenance centers have geographical and redundant communication capabilities. In the event of a disaster removing any maintenance center from service another geographical center would assume maintenance responsibilities. The contact numbers will not change and the transfer will be transparent to the CLEC.

Attachment 11

Bona Fide Request and New Business Request Process

BONA FIDE REQUEST AND NEW BUSINESS REQUEST PROCESS

1. **Bona Fide Request**

1.1 The Parties agree that Sprint is entitled to order any Network Element, interconnection option or service option required to be made available by FCC or Commission requirements pursuant to the Act. A Bona Fide Request (BFR) is to be used when Sprint makes a request of AT&T to provide a new or modified Network Element, interconnection option or other service option pursuant to the Act that was not previously provided for in this Agreement.

1.2 A BFR shall be submitted in writing by Sprint and shall specifically identify the requested service date, technical requirements, space requirements and/or such other specifications that clearly define the request such that AT&T has sufficient information to analyze and prepare a response. Such a request shall also include Sprint's designation of the request as being pursuant to the Telecommunications Act of 1996 (i.e., a BFR). The request shall be sent to Sprint's designated AT&T Sales contact or Local Contract Manager (LCM).

1.3 Within two (2) business days of receipt of a BFR, AT&T shall acknowledge in writing its receipt and identify a single point of contact responsible for responding to the BFR and shall request any additional information needed to process the request to the extent known at that time. Notwithstanding the foregoing, AT&T may reasonably request additional information from Sprint at any time during the processing of the BFR.

1.4 Within thirty (30) business days of AT&T's receipt of the BFR, if the preliminary analysis of the requested BFR is not of such complexity that it will cause AT&T to expend extraordinary resources to evaluate the BFR, AT&T shall respond to Sprint by providing a preliminary analysis of the new or modified Network Element or interconnection option not ordered by the FCC or Commission that is the subject of the BFR. The preliminary analysis shall either confirm that AT&T will offer access to the new or modified Network Element, interconnection option or service option or confirm that AT&T will not offer the new or modified Network Element, interconnection option or service option.

1.5 For any new or modified Network Element, interconnection option or service option not ordered by the FCC or Commission, if the preliminary analysis states that AT&T will offer the new or modified Network Element, interconnection option or service option, the preliminary analysis will include an estimate of the costs of utilizing existing resources, both personnel and systems, in the development including, but not limited to, request parameters analysis, determination of impacted AT&T departments, determination of required resources, project management resources, etc. (Development Rate) including a general breakdown of such costs associated with the Network

Element, interconnection option or service option and the date the request can be met. If AT&T cannot provide the Network Element, interconnection option or service option by the requested date, AT&T shall provide an alternative proposed date together with a detailed explanation as to why AT&T is not able to meet Sprint's requested date. If the preliminary analysis states that AT&T will not offer the new or modified Network Element, interconnection option or service option, AT&T will provide an explanation of why the request is not technically feasible, does not qualify as a BFR for the new or modified Network Element, interconnection option or service option, should actually be submitted as a New Business Request (NBR) or is otherwise not required to be provided under the Act.

1.6 For any new or modified Network Element, interconnection option or service option not ordered by the FCC or Commission, if AT&T determines that the preliminary analysis of the requested BFR is of such complexity that it will cause AT&T to expend extraordinary resources to evaluate the BFR, AT&T shall notify Sprint within ten (10) business days of AT&T's receipt of BFR that a fee will be required prior to the preliminary evaluation of the BFR. Such fee shall be limited to AT&T's extraordinary expenses directly related to the complex request that require the allocation and engagement of additional resources above the existing allocated resources used on BFR cost development which include, but are not limited to, expenditure of funds to develop feasibility studies, specific resources that are required to determine request requirements (such as operation support system analysts, technical managers, software developers), software impact analysis by specific software developers; software architecture development, hardware impact analysis by specific system analysts, etc. and the request for such fee shall be accompanied with a general breakdown of such costs. If Sprint accepts the complex request evaluation fee proposed by AT&T, Sprint shall submit such fee within thirty (30) business days of AT&T's notice that a complex request evaluation fee is required. Within thirty (30) business days of AT&T's receipt of the complex request evaluation fee, AT&T shall respond to Sprint by providing a preliminary analysis, consistent with Section 1.4 above.

1.7 Sprint may cancel a BFR at any time up until thirty (30) business days after receiving AT&T's preliminary analysis. If Sprint cancels the BFR within thirty (30) business days after receipt of AT&T's preliminary analysis, AT&T shall be entitled to keep any complex request evaluation fee submitted in accordance with Section 1.6 above, minus those costs included in the fee that have not been incurred as of the date of cancellation.

1.8 Sprint will have thirty (30) business days from receipt of preliminary analysis to accept the preliminary analysis or cancel the BFR. If Sprint fails to respond within this thirty (30) business day period, the BFR will be deemed cancelled. Acceptance of the preliminary analysis must be in writing and accompanied by the estimated Development Rate for the new or modified Network

Element, interconnection option or service option quoted in the preliminary analysis**.**

1.9 Notwithstanding any other provision of this Agreement, AT&T shall propose a firm price quote, including the firm Development Rate, the firm nonrecurring rate and the firm recurring rate, and a detailed implementation plan within ten (10) business days of receipt of Sprint's accurate BFR application for a Network Element, interconnection option or service option that is operational at the time of the request; within thirty (30) business days of receipt of Sprint's accurate BFR application for a new or modified Network Element, interconnection option or service option ordered by the FCC or Commission; and within sixty (60) business days of receipt of Sprint's accurate BFR application for a new or modified Network Element, interconnection option or service option not ordered by the FCC or Commission or not operational at the time of the request. The firm nonrecurring rate will not include any of the Development Rate or the complex request evaluation fee, if required, in the calculation of this rate. Such firm price quote shall not exceed the estimate provided with the preliminary analysis by more than twenty-five percent (25%).

1.10 Sprint shall have thirty (30) business days from receipt of firm price quote to accept or deny the firm price quote and submit any additional Development or nonrecurring rates quoted in the firm price quote.

1.11 Unless Sprint agrees otherwise, all prices shall be consistent with the applicable pricing principles and provisions of the Act.

1.12 If Sprint disputes AT&T's evaluation of the BFR or believes that any price or fee associated with the BFR is not consistent with the requirements of the Act, either Party may seek dispute resolution in accordance with the dispute resolution provisions set forth in General Terms and Conditions.

1.13 Upon agreement to the rates, terms and conditions of a BFR, the Parties shall negotiate in good faith an amendment to this Agreement.

2 New Business Request

2.1 Sprint also shall be permitted to request the development of new or modified facilities or service options which may not be required by the Act. Procedures applicable to requesting the addition of such elements, services and options are specified in this Attachment. A NBR is to be used by Sprint to make a request of AT&T for a new or modified feature or capability of an existing product or service, a new product or service that is not deployed within the AT&T network or operations and business support systems, or a new or modified service option that was not previously included in this Agreement (Requested NBR Services) and is not required by the Act.

2.2 An NBR shall be submitted in writing by Sprint and shall specifically identify the requested service date, technical requirements, space requirements and/or such specifications that clearly define the request such that AT&T has sufficient information to analyze and prepare a response. The request shall be sent to Sprint's designated AT&T Sales contact or LCM.

2.3 Within two (2) business days of receipt of an NBR, AT&T shall acknowledge in writing its receipt and identify a single point of contact responsible for responding to the NBR and shall request any additional information needed to process the request to the extent known at that time. Notwithstanding the foregoing, AT&T may reasonably request additional information from Sprint at any time during the processing of the NBR.

2.4 If the preliminary analysis of the requested NBR is not of such complexity that it will cause AT&T to expend extraordinary resources to evaluate the NBR, within thirty (30) business days of its receipt of the NBR, AT&T shall respond to Sprint by providing a preliminary analysis of such Requested NBR Services that are the subject of the NBR. The preliminary analysis shall either confirm that AT&T will offer access to the Requested NBR Services or confirm that AT&T will not offer the Requested NBR Services.

2.5 If the preliminary analysis states that AT&T will offer the Requested NBR Services, the preliminary analysis will include an estimate of the Development Rate including a general breakdown of costs and the date the request can be met. If AT&T cannot provide the Requested NBR Service by the requested date, it shall provide an alternative proposed date together with a detailed explanation as to why AT&T is not able to meet Sprint's requested date.

2.6 If AT&T determines that the preliminary analysis of the requested NBR is of such complexity that it will cause AT&T to expend extraordinary resources to evaluate the NBR, AT&T shall notify Sprint within ten (10) business days of AT&T's notice that a complex request evaluation fee is required prior to the evaluation of the NBR. Such fee shall be limited to AT&T's extraordinary expenses directly related to the complex request. If Sprint accepts the complex request evaluation fee amount proposed by AT&T, Sprint shall submit such complex request evaluation fee within thirty (30) business days of AT&T's notice that a complex request evaluation fee is required.

2.7 Within thirty (30) business days of AT&T's receipt of the complex request evaluation fee, AT&T shall respond to Sprint by providing a preliminary analysis of such Requested NBR Services.

2.8 Sprint may cancel an NBR at any time. If Sprint cancels the request more than ten (10) business days after submitting it, Sprint shall pay AT&T's reasonable and demonstrable costs of processing and/or implementing the

NBR up to the date of cancellation in addition to any fee submitted in accordance with Section 1.6 above.

2.9 Sprint will have thirty (30) business days from receipt of the preliminary analysis to accept the preliminary analysis or cancel the NBR. If Sprint fails to respond within this thirty (30) business day period, the NBR will be deemed cancelled.

2.10 Acceptance of the preliminary analysis must be in writing and accompanied by the estimated Development Rate for the Requested NBR Services quoted in the preliminary analysis.

2.11 AT&T shall propose a firm price quote including the firm Development Rate, the firm nonrecurring rate, and the firm recurring rate, and a detailed implementation plan within ten (10) business days of receipt of Sprint's accurate NBR application for a Requested NBR Service that is operational at the time of the request and within sixty (60) business days of receipt of Sprint's accurate NBR application for the Requested NBR Services not operational at the time of the request. The firm nonrecurring rate will not include any of the Development Rate or the complex request evaluation fee, if required, in the calculation of this rate. Such firm price quote shall not exceed the estimate provided with the preliminary analysis by more than twenty-five percent (25%).

2.12 Sprint shall have thirty (30) business days from receipt of the firm price quote to accept or deny the firm price quote and submit any additional nonrecurring, non-refundable fees quoted in the firm price quote. If the firm price quote is less than the preliminary analysis' estimate of the Development Rate, AT&T will credit Sprint's account for the difference.

2.13 Upon agreement to the rates, terms and conditions of a NBR, an amendment to this Agreement, or a separate agreement, may be required and the Parties shall negotiate such agreement or amendment in good faith.