ELECTRONICALLY FILED - 2019 February 1 3:57 PM - SCPSC - Docket # 2019-51-E - Page 1 of 6262

Parker Poe

J. Ashley Cooper
Partner
Telephone: 843.727.2674
Direct Fax: 843.727.2680
ashleycooper@parkerpoe.com

Atlanta, GA
Charleston, SC
Charlotte, NC
Columbia, SC
Greenville, SC
Raleigh, NC
Spartanburg, SC

February 1, 2019

Via Electronic Filing

The Honorable Jocelyn G. Boyd
Chief Clerk/Administrator
Public Service Commission of South Carolina
101 Executive Center Drive
Columbia, South Carolina 29210

Re: Request of Eastover Solar LLC for Modification of Interconnection Agreement with South Carolina Electric & Gas Company
Docket Number 2019-51-E

Dear Ms. Boyd:

Enclosed for filing in connection with the above-referenced matter, please find *South Carolina Electric & Gas Company's Response in Opposition to Motion to Maintain Status Quo.*

By copy of this letter, we are serving the parties of record with a copy of the Response and attach a certificate of service to that effect.

If you have any questions, please do not hesitate to contact me.

Sincerely,

J. Ashley Cooper

JAC:vbb

Enclosure

cc: (Via Electronic Mail and First Class Mail)
Richard L. Whitt
Dawn Hipp
Jeffrey M. Nelson

ELECTRONICALLY FILED - 2019 February 1 3:57 PM - SCPSC - Docket # 2019-51-E - Page 2 of 2

BEFORE

THE PUBLIC SERVICE COMMISSION

OF SOUTH CAROLINA

DOCKET NO. 2019-51-E

IN RE: Request of Eastover Solar LLC for Modification of Interconnection Agreement with South Carolina Electric & Gas Company	))))))))))	**CERTIFICATE OF SERVICE**

This is to certify that I have caused to be served on this day one (1) copy of **SOUTH CAROLINA ELECTRIC & GAS COMPANY'S RESPONSE IN OPPOSITION TO MOTION TO MAINTAIN STATUS QUO** via electronic mail and U.S. First Class Mail upon the persons named below, addressed as follows:

Richard L. Whitt
Austin & Rogers, P.A.
508 Hampton Street, Suite 203
Columbia, South Carolina 29201
Email: rlwhitt@austinrogerspa.com

Attorney for Petitioner, Eastover Solar LLC

Dawn Hipp
Jeffrey M. Nelson
Office of Regulatory Staff
1401 Main Street, Suite 900
Columbia, South Carolina 29201
Email: dhipp@regstaff.sc.gov
Email: jnelson@regstaff.sc.gov

s/ J. Ashley Cooper

This 1ST day of February, 2019.

ELECTRONICALLY FILED - 2019 February 1 3:57 PM - SCPSC - Docket # 2019-51-E - Page 1 of 6

BEFORE

THE PUBLIC SERVICE COMMISSION

OF SOUTH CAROLINA

DOCKET NO. 2019-51-E

IN RE: Request of Eastover Solar LLC for Modification of Interconnection Agreement with South Carolina Electric & Gas Company	)))))))))	**South Carolina Electric & Gas Company's Response in Opposition to Motion to Maintain Status Quo**

Pursuant to S.C. Code Ann. Regs. § 103-829(A) and other applicable rules of practice and procedure of the Public Service Commission of South Carolina ("Commission"), South Carolina Electric & Gas Company ("SCE&G") responds in opposition to Eastover Solar, LLC's ("Solar Developer") Motion to Maintain Status Quo, filed on January 24, 2019, in the above-referenced docket (the "Motion"). For the reasons set forth below, SCE&G respectfully requests that the Motion be denied.

BACKGROUND

Solar Developer plans to construct a solar generating facility up to approximately 73.6 MW that will be a Qualifying Facility as defined by Federal Energy Regulatory Commission ("FERC") Regulation 18 C.F.R. § 292.204. Solar Developer plans to sell the output of this facility to SCE&G. Solar Developer entered into an Interconnection Agreement ("IA") with SCE&G on November 13, 2018—just prior to the Dominion/SCANA merger hearing. A copy of the IA is attached hereto as Exhibit 1 and incorporated herein. As memorialized in Appendix 4 of the IA, Solar Developer agreed to a series of project Milestones (as defined in the IA), which detail "critical" construction milestones and responsibilities "as agreed to by the Parties,"

including the first Milestone payment ("Milestone Payment 1"), which was due on or before January 29, 2019. *See* Exhibit 1 at Appendix 4.

After intervening in Docket 2018-401-E, involving a Motion to Maintain Status Quo and Request for Modification by an unrelated solar developer, Beulah Solar, LLC ("Beulah"), Solar Developer comes now with its own Motion to Maintain Status Quo and its Request for Modification, which were both filed on January 24, 2019.[1] Solar Developer subsequently failed to make Milestone Payment 1 on January 29, 2019, and its IA was terminated by the terms of Appendix 2 of the IA.[2] The Motion, similar to Beulah's, improperly seeks to have the Commission amend the IA and thereby grant an unlimited extension of Solar Developer's Milestone Payment 1, on a completely unrelated basis (i.e., a future stakeholder process) and should be denied.[3]

ARGUMENT

I. The Motion is untimely because the IA terminated by its terms.

Pursuant to the IA, Milestone Payment 1 was due on or before January 29, 2019. No payment was made on that date, and there is no modification of the IA or order from the Commission allowing for delay of Milestone Payment 1. A notice acknowledging the termination was sent by SCE&G on January 30, 2019. Simply filing the Motion does not timely extend the deadline for Milestone Payment 1, as a party similarly seeking a motion for a preliminary injunction does not automatically secure the injunction by filing, but is only able to

[1] SCE&G will respond separately to Solar Developer's Request for Modification.
[2] While Solar Developer styles this as a motion to maintain the status quo, maintaining the status quo "maintains" the termination of its IA for failure to pay the required Milestone Payment 1 on or before January 29, 2019.
[3] In Order No. 2018-804, Docket No. 2017-370-E, the Commission approved a stakeholder process "to develop a fair, reasonable, and nondiscriminatory protocol for the curtailment of all legally dispatchable generating resources in circumstances where curtailment of solar resources is necessary due to system conditions on SCE&G's Transmission System or Distribution System, or otherwise required under the terms of those solar resources' interconnection agreements with SCE&G."

ELECTRONICALLY FILED - 2019 February 4 1:18 PM - SCPSC - Docket # 2018-401-E - Page 4 of 6 262

secure the requested relief through later order of the court.[4] Without even giving SCE&G an opportunity to be heard, Solar Developer assumes that filing the Motion excuses their previously agreed-upon obligations under the IA.

II. <u>The Motion fails to set forth a basis for relief.</u>

The Motion is not based in fact or law and fails to articulate a basis for maintaining a "status quo" that is in conflict with the terms of the IA. The Motion does not present "a concise and cogent statement of the facts" to the Commission or otherwise provide appropriate grounds to grant the requested relief. *See* S.C. Code Ann. Regs. § 103-829; *see also* South Carolina Rules of Civil Procedure ("S.C.R.C.P.") § 7(b)(1) (motions should "state with particularity the grounds therefor, and . . . the relief or order sought.").

Rather than cite to sufficient facts or law, Solar Developer simply notes in the Motion that Solar Developer has been unable to secure financing based on the curtailment procedures specified in the IA. *See* Motion to Maintain Status Quo at 2, filed on January 24, 2019. This claim echoes the same unsupported assertion raised by Beulah in Docket No. 2018-401-E. After its parent company/affiliate previously developed and, upon information and belief, sold another project, with substantially similar terms, and only months after signing the IA, Solar Developer now claims that it cannot reliably estimate revenues it will receive from electricity sales due to the curtailment language of the IA—language that the Solar Developer was aware of prior to signing the IA. *See* Motion to Maintain Status Quo at 1. Solar Developer also refers to purported uncertainty stemming from a possible stakeholder process that will examine curtailment issues, but it does not explain how this process impacts or provides adequate grounds for a delay in

[4] The comparison to injunctive relief is appropriate, as a Motion to Maintain Status Quo is essentially a motion for a preliminary injunction using different terms. The South Carolina Supreme Court has repeatedly stated "[t]he sole purpose of an injunction is to preserve the status quo." *See Powell v. Immanuel Baptist Church*, 261 S.C. 219, 221, 199 S.E.2d 60, 61 (1973).

ELECTRONICALLY FILED - 2019 February 1 8:57 PM - SCPSC - Docket # 2018-401-E - Page 5 of 6262

meeting Milestone Payment 1. Because of Solar Developer's failure to allege facts or provide an adequate basis for relief, the Commission should deny the Motion as a matter of law.

III. Continuation of the Status Quo through an indefinite extension of Milestone Payment 1 is in conflict with the IA.

Pursuant to Appendix 2 of the IA, Solar Developer agreed to:

> [P]ay for the estimated Interconnection Facilities and Upgrades, in Appendix 6, which together total $4,601,100.00, which is the basis for the Milestone Payments in Appendix 4 of this Agreement. Failure to make the payment may result in the termination of the Generator Interconnection Agreement and the withdrawal of the Generator Interconnection Application.

The requirements in the IA, including Appendix 2 and Appendix 4, are plain, and the intent is clear—the Milestone Payments are to be made or termination may result. Milestone Payment 1 is not contingent upon, or in any way related to, the ability to obtain financing, nor is it related in any way to the curtailment provisions contained in Section 3.4 or Appendix 5 of the IA. Assuming, *arguendo*, the Commission were to someday revise the curtailment provisions of Appendix 5 that promote and ensure the reliability of the SCE&G system, this would not impact the language in Appendix 2 and Appendix 4 of the IA relating to the Milestone Payments (as defined in the IA).

Solar Developer states that "[t]he IA contains a number of detailed and complex provisions relating to SCE&G's ability to curtail the delivery of electricity from Eastover Solar to the grid." *See* Motion to Maintain Status Quo at 1. To the contrary, the curtailment provisions of the IA in Section 20 in Appendix 5 are clearly written, necessary, and designed to promote the operational integrity and reliability of the SCE&G system. Indeed, the Settlement Agreement among SCE&G, Dominion Energy, and the South Carolina Solar Business Alliance, filed November 30, 2018, in Docket No. 2017-370-E ("Settlement Agreement"), recognizes that "curtailment of solar resources is necessary due to system conditions on SCE&G's Transmission

ELECTRONICALLY FILED - 2019 February 18 3:57 PM - SCPSC - Docket # 2019-305-E - Page 6 of 6262

System or Distribution System, or otherwise required under the terms of those solar resources' interconnection agreements with SCE&G." *See* Settlement Agreement at 6. The curtailment provisions contained in Appendix 5 of the IA are not in flux in such a way as to cause uncertainty for Solar Developer. As is clear from the language above, a stakeholder group will discuss the adoption of clarifying curtailment protocols that are anticipated to be utilized in conjunction with existing IA language.

Solar Developer freely—and recently—negotiated the IA with SCE&G. Solar Developer reviewed those provisions and agreed to them at the time it negotiated and executed the IA. Solar Developer is a sophisticated party and affiliated with a large, sophisticated solar developer. Solar Developer's parent/affiliate has executed a prior interconnection agreement with SCE&G. The prior agreement contains the same curtailment language, and Solar Developer's parent/affiliate was able, upon information and belief, to sell the project to another developer, who timely made the first milestone payment.

Furthermore, Section 6.2 of the IA also clearly and expressly limits when Milestones may be extended, particularly when the applicable Milestone was subject to an earlier extension:

> The Party affected by the failure to meet a milestone shall not unreasonably withhold agreement to such an amendment unless (1) it will suffer significant uncompensated economic or operational harm from the delay, (2) the delay will materially affect the schedule of another Interconnection Customer with subordinate Queue Position, (3) attainment of the same milestone has previously been delayed, or (4) it has reason to believe that the delay in meeting the milestone is intentional or unwarranted notwithstanding the circumstances explained by the Party proposing the amendment.
>
> (emphasis added)

Section 6.2 also requires Solar Developer to "immediately notify [SCE&G] of the reason(s) for not meeting the milestone" and propose the earliest date by which it can meet the Milestone. Through the IA, amendments and extensions of Milestones, including Milestone Payment 1, are a

ELECTRONICALLY FILED - 2019 February 18 3:57 PM - SCPSC - Docket # 2019-305-E - Page 7 of 262

managed process that must be done with the least impact to the in-service deadline. For many reasons, including those set forth below, Milestone Payment 1 should not be extended because of the Motion.

a. Further delay may impact other Interconnection Customers.

The language of the IA appropriately balances an interconnecting customer's reasonable need for an extension, despite its good-faith efforts, against the needs of the utilities and the public in order to prevent disparate treatment of others in the queue and reduce queue congestion. Therefore, extensions of Milestones must be noted early and should not result in unnecessary delays or "gaming." The FERC noted in similar circumstances that such extensions might present harm to later-queued interconnection customers in the form of uncertainty, cascading restudies, and shifted costs necessitated if the project is removed from the queue at a later date. *See, e.g.*, *Midcontinent Indep. Sys. Operator, Inc.*, 147 FERC ¶ 61,198, 62,108 (2014) (stating the Commission's goal of "discouraging speculative or unviable projects from entering the queue [and] getting projects that are not making progress toward commercial operation out of the queue"). For these reasons, the FERC approved termination of interconnection agreements where the interconnection customer failed to make interconnection payments. *See Pacific Gas & Electric Co.,* 146 FERC ¶ 61,120, 61,518 (2014); *Midwest Independent Transmission System Operator, Inc.*, 143 FERC ¶ 61,709, 61,713, (2013).

SCE&G administers its queue in a comparable, non-discriminatory manner and cannot bestow preferential treatment. Solar Developer is not uniquely impacted by the stakeholder process nor does it allege any special or unique circumstances which justify disparate treatment from other similarly situated developers. Indeed, Solar Developer's request was made on the heels of Beulah's request and can be best described as a "me too" motion. Granting Solar

ELECTRONICALLY FILED - 2019 February 4 1:18 PM - SCPSC - Docket # 2019-305-E - Page 6 of 6 262

Developer's Motion is unwarranted and unfair to later-queued customers (particularly those with viable projects).

b. Solar Developer's failure to meet Milestone Payment 1 is intentional or unwarranted.

Solar Developer is intentionally avoiding its obligations under the IA by constructing convenient, yet insufficient, narratives to convince the Commission to further extend the deadline for Milestone Payment 1. Being so, this situation also falls under another prong of Section 6.2 in the IA, because it appears that "the delay in meeting the milestone is intentional or unwarranted notwithstanding the circumstances explained by [Solar Developer]."

As with any industry, and in particular a regulated industry, there is not only a chance but also a likelihood of administrative hearings, stakeholder meetings, proposed rulemakings, and the like. In fact, Solar Developer executed its IA with SCE&G just prior to the start of SCE&G's merger proceeding before this Commission. If the mere possibility of routine action such as the stakeholder process, for which Section 6.2 provides guideposts, serves as grounds for delaying performance of a contract or contract modification, all interconnection agreements would be unenforceable and useless. Essentially, the industry would come to a standstill.

c. Solar Developer is not excused from performing its obligations through filing of the Motion while it seeks modification of the IA.

The Motion to Maintain Status Quo seeks modification of the IA through the indefinite extension of all deadlines, including the Milestone payments. As noted in SCE&G's Response in Opposition to Solar Developer's Request for Modification, neither Section 12.12 of the IA, nor S.C. Code Ann. § 58-27-980—the basis for the Solar Developer's Request for Modification—provides that a party seeking modification is excused from all its obligations in the interim. While SCE&G recognizes the ability of the Commission to oversee contracts between the utility and interconnection customers, the party seeking modification must ensure that it continues to

ELECTRONICALLY FILED - 2019 February 28 4:18 PM - SCPSC - Docket # 2017-305-E - Page 8 of 62

fulfill its obligations, particularly unrelated terms and conditions, under the contract prior to the grant of any requested relief. It would be equally unfair and unwarranted to allow a solar developer to fail to perform site clearing while it seeks Commission clarification of a plant operation and maintenance provision. The Motion to Maintain Status Quo wrongly attempts to stall all deadlines of the IA.

CONCLUSION

For the reasons stated above, the Motion should be denied.

[SIGNATURE PAGE FOLLOWS]

ELECTRONICALLY FILED - 2019 February 14 3:57 PM - SCPSC - Docket # 2019-305-E - Page 10 of 62

Respectfully Submitted,

/s/ J. Ashley Cooper_____
K. Chad Burgess, Esquire
Matthew W. Gissendanner, Esquire
South Carolina Electric & Gas Company
Mail Code C222
220 Operation Way
Cayce, South Carolina 29033-3701
Phone: (803) 217-8141
Fax: (803) 217-7810
Email: chad.burgess@scana.com

J. Ashley Cooper, Esquire
Parker Poe Adams & Bernstein LLP
200 Meeting Street
Suite 301
Charleston, South Carolina 29401
Phone: (843) 727-2674
Fax: (843) 727-2680
Email: ashleycooper@parkerpoe.com

Attorneys for South Carolina Electric & Gas Company

Cayce, South Carolina
February 1, 2019

ELECTRONICALLY FILED - 2019 February 1 3:57 PM - SCPSC - Docket # 2018-305-E - Page 11 of 62

SCE&G'S Response in Opposition to Motion to Maintain Status Quo

See Attached

<u>EXHIBIT 1</u>

ELECTRONICALLY FILED - 2019 February 21 3:57 PM - SCSC - Docket 2019-001-E - Page 2 of 262

ELECTRONICALLY FILED - 2019 February 18 3:57 PM - SCPSC - Docket # 2019-305-E - Page 31 of 62

SOUTH CAROLINA

GENERATOR INTERCONNECTION AGREEMENT

TABLE OF CONTENTS

Page No.

Article 1. Scope and Limitations of Agreement 2

1.1 Applicability 2
1.2 Purpose 2
1.3 No Agreement to Purchase or Deliver Power or RECs 2
1.4 Limitations 2
1.5 Responsibilities of the Parties 2
1.6 Disconnect Switch Required 3
1.7 Parallel Operation Obligations 4
1.8 Metering 4
1.9 Reactive Power 4
1.10 Capitalized Terms 5

Article 2. Inspection, Testing, Authorization, and Right of Access 5

2.1 Equipment Testing and Inspection 5
2.2 Authorization Required Prior to Parallel Operation 6
2.3 Right of Access 6

Article 3. Effective Date, Term, Termination, and Disconnection 7

3.1 Effective Date 7
3.2 Term of Agreement 7
3.3 Termination 7
3.4 Temporary Disconnection 8

Article 4. Cost Responsibility for Interconnection Facilities and Distribution Upgrades 10

4.1 Interconnection Facilities 10
4.2 Distribution Upgrades 10

Article 5. Cost Responsibility for Network Upgrades 11

5.1 Applicability 11
5.2 Network Upgrades 11

Article 6. Billing, Payment, Milestones, and Financial Security 11

6.1 Billing and Payment Procedures and Final Accounting 11
6.2 Milestones 12
6.3 Financial Security Arrangements 12

Article 7. Assignment, Liability, Indemnity, Force Majeure, Consequential Damages, and Default 13

7.1 Assignment 13
7.2 Limitation of Liability 14
7.3 Indemnity 14
7.4 Consequential Damages 15
7.5 Force Majeure 16
7.6 Default 16

ELECTRONICALLY FILED - 2019 February 4 1:18 PM - SCGIP SDocket 2019-05-E - Page 4 of 62

Page No.

Article 8. Insurance 16

Article 9. Confidentiality 18

Article 10. Disputes 19

Article 11. Taxes 19

Article 12. Miscellaneous 19

12.1 Governing Law, Regulatory Authority, and Rules 19
12.2 Amendment 19
12.3 No Third-Party Beneficiaries 20
12.4 Waiver 20
12.5 Entire Agreement 20
12.6 Multiple Counterparts 20
12.7 No Partnership 21
12.8 Severability 21
12.9 Security Arrangements 21
12.10 Environmental Releases 21
12.11 Subcontractors 21
12.12 Reservation of Rights 22

Article 13. Notices 22

13.1 General 22
13.2 Billing and Payment 23
13.3 Alternative Forms of Notice 24
13.4 Designated Operating Representative 25
13.5 Changes to the Notice Information 26

Appendix 1 – Glossary of Terms

Appendix 2 – Description and Costs of the Generating Facility, Interconnection Facilities, and Metering Equipment

Appendix 3 – One-line Diagram Depicting the Generating Facility, Interconnection Facilities, Metering Equipment, and Upgrades

Appendix 4 – Milestones

Appendix 5 – Additional Operating Requirements for the Utility's System and Affected Systems Needed to Support the Interconnection Customer's Needs

Appendix 6 – Utility's Description of its Upgrades and Best Estimate of Upgrade Costs

ELECTRONICALLY FILED - 2019 February 1 8:57 PM SCGIP SDocket 2019-005-E - Page 15 of 62

ELECTRONICALLY FILED - 2019 February 4 1:18 PM - SCPSC - Docket # 2019-305-E - Page 6 of 62

This Interconnection Agreement ("Agreement") is made and entered into this 13 day of November, 2018, by South Carolina Electric & Gas Company ("Utility"), and Eastover Solar LLC ("Interconnection Customer") each hereinafter sometimes referred to individually as "Party" or both referred to collectively as the "Parties."

Utility Information

Utility: South Carolina Electric & Gas Company

Attention: Manager – Electric Transmission Support

Address: 220 Operation Way, Mail Code J36

City: Cayce State: SC Zip: 29033

Phone: 803-217-2175 Fax: 803-933-7046

Email: ElectricTransmission@scana.com

Interconnection Customer Information

Interconnection Customer: Eastover Solar LLC

Attention: Manager

Address: Three Radnor Corporate Center, 100 Matsonford Rd, Ste 300

City: Radnor State: PA Zip: 19087

Phone: 866-946-3123 Fax: 484-654-2136

Email: info@communityenergyinc.com

Interconnection Request ID No: 20170720003

In consideration of the mutual covenants set forth herein, the Parties agree as follows:

ELECTRONICALLY FILED - 2019 February 14 3:57 PM - SCPSC - Docket # 2019-305-E - Page 7 of 262

Article 1. **Scope and Limitations of Agreement**

1.1 Applicability

This Agreement shall be used for all Interconnection Requests submitted under the South Carolina Generator Interconnection Procedures except for those submitted under the 20 kW Inverter Process in Section 2 of the Standard.

1.2 Purpose

This Agreement governs the terms and conditions under which the Interconnection Customer's Generating Facility will interconnect with, and operate in parallel with, the Utility's System.

1.3 No Agreement to Purchase or Deliver Power or RECs

This Agreement does not constitute an agreement to purchase or deliver the Interconnection Customer's power or Renewable Energy Certificates (RECs). The purchase or delivery of power, RECs that might result from the operation of the Generating Facility, and other services that the Interconnection Customer may require will be covered under separate agreements, if any. The Interconnection Customer will be responsible for separately making all necessary arrangements (including scheduling) for delivery of electricity with the applicable Utility.

1.4 Limitations

Nothing in this Agreement is intended to affect any other agreement between the Utility and the Interconnection Customer.

1.5 Responsibilities of the Parties

1.5.1 The Parties shall perform all obligations of this Agreement in accordance with all Applicable Laws and Regulations, Operating Requirements, and Good Utility Practice.

1.5.2 The Interconnection Customer shall construct, interconnect, operate and maintain its Generating Facility and construct, operate, and maintain its Interconnection Facilities in accordance with the applicable manufacturer's recommended maintenance schedule, and in accordance with this Agreement, and with Good Utility Practice.

ELECTRONICALLY FILED - 2019 February 4 1:18 PM PSC SDocket #EL19-055 - Page 8 of 262

1.5.3 The Utility shall construct, operate, and maintain its System and Interconnection Facilities in accordance with this Agreement, and with Good Utility Practice.

1.5.4 The Interconnection Customer agrees to construct its facilities or systems in accordance with applicable specifications that meet or exceed those provided by the National Electrical Safety Code, National Electrical Code, the American National Standards Institute, IEEE, Underwriters' Laboratories, and Operating Requirements in effect at the time of construction and other applicable national and state codes and standards. The Interconnection Customer agrees to design, install, maintain, and operate its Generating Facility so as to reasonably minimize the likelihood of a disturbance adversely affecting or impairing the System or equipment of the Utility and any Affected Systems.

1.5.5 Each Party shall operate, maintain, repair, and inspect, and shall be fully responsible for the facilities that it now or subsequently may own unless otherwise specified in the Appendices to this Agreement. Each Party shall be responsible for the safe installation, maintenance, repair and condition of their respective lines and appurtenances on their respective sides of the point of change of ownership. The Utility and the Interconnection Customer, as appropriate, shall provide Interconnection Facilities that adequately protect the Utility's System, personnel, and other persons from damage and injury. The allocation of responsibility for the design, installation, operation, maintenance and ownership of Interconnection Facilities shall be delineated in the Appendices to this Agreement.

1.5.6 The Utility shall coordinate with all Affected Systems to support the interconnection.

1.5.7 The Interconnection Customer is responsible for reviewing the NERC registration requirements, registering when applicable and complying with the applicable Electric Reliability Organization (ERO) reliability standards.

1.6 <u>Disconnect Switch Required</u>

The Interconnection Customer shall install a manual load-break disconnect switch or safety switch as a clear visible indication of switch position between the Utility System and the Interconnection Customer. The switch must have padlock provisions for locking in the open position. The switch must be visible to, and accessible to Utility personnel. The switch must be in visible sight of where the Utilities' interconnection facilities meet the

Interconnection Customer's facilities. The switch must be labeled "Generator Disconnect Switch." The switch may isolate the Interconnection Customer and its associated load from the Utility's System or disconnect only the Generator from the Utility's System and shall be accessible to the Utility at all times. The Utility, in its sole discretion, determines if the switch is suitable.

1.7 Parallel Operation Obligations

Once the Generating Facility has been authorized to commence parallel operation, the Interconnection Customer shall abide by all rules and procedures pertaining to the parallel operation of the Generating Facility in the applicable control area, including, but not limited to: 1) any rules and procedures concerning the operation of generation set forth in Commission-approved tariffs or by the applicable system operator(s) for the Utility's System and; 2) the Operating Requirements set forth in Appendix 5 of this Agreement.

1.8 Metering

The Interconnection Customer shall be responsible for the Utility's reasonable and necessary cost for the purchase, installation, operation, maintenance, testing, repair, and replacement of metering and data acquisition equipment specified in Appendices 2 and 3 of this Agreement. The Interconnection Customer's metering (and data acquisition, as required) equipment shall conform to applicable industry rules and Operating Requirements.

1.9 Reactive Power

1.9.1 The Interconnection Customer shall design its Generating Facility to maintain a composite power delivery at continuous rated power output at the Point of Interconnection at a power factor within the range of 0.95 leading to 0.95 lagging, unless the Utility has established different requirements that apply to all similarly situated generators in the control area on a comparable basis. The requirements of this paragraph shall not apply to wind generators.

1.9.2 The Utility is required to pay the Interconnection Customer for reactive power that the Interconnection Customer provides or absorbs from the Generating Facility when the Utility requests the Interconnection Customer to operate its Generating Facility outside the range specified in Article 1.9.1 or the range established by the Utility that applies to all similarly situated generators in the control area. In addition, if the Utility pays its own or affiliated generators for reactive power service within the specified range, it must also pay the Interconnection Customer.

ELECTRONICALLY FILED - 2019 February 4 1:18 PM PST SCP Docket 2019 01 005 E - Page 10 of 62

1.9.3 Payments shall be in accordance with the Utility's applicable rate schedule then in effect unless the provision of such service(s) is subject to a regional transmission organization or independent system operator FERC-approved rate schedule. To the extent that no rate schedule is in effect at the time the Interconnection Customer is required to provide or absorb reactive power under this Agreement, the Parties agree to expeditiously file such rate schedule and agree to support any request for waiver of any prior notice requirement in order to compensate the Interconnection Customer from the time service commenced.

1.10 Capitalized Terms

Capitalized terms used herein shall have the meanings specified in the Glossary of Terms in Attachment 1 of the South Carolina Generator Interconnection Procedures or the body of this Agreement.

Article 2. **Inspection, Testing, Authorization, and Right of Access**

2.1 Equipment Testing and Inspection

2.1.1 The Interconnection Customer shall test and inspect its Generating Facility and Interconnection Facilities prior to interconnection. The Interconnection Customer shall notify the Utility of such activities no fewer than ten (10) Business Days (or as may be agreed to by the Parties) prior to such testing and inspection. Testing and inspection shall occur on a Business Day, unless otherwise agreed to by the Parties. The Utility may, at the Interconnection Customer's expense, send qualified personnel to the Generating Facility site to inspect the interconnection and observe the testing. The Interconnection Customer shall provide the Utility a written test report when such testing and inspection is completed.

2.1.2 The Utility shall provide the Interconnection Customer written acknowledgment that it has received the Interconnection Customer's written test report. Such written acknowledgment shall not be deemed to be or construed as any representation, assurance, guarantee, or warranty by the Utility of the safety, durability, suitability, or reliability of the Generating Facility or any associated control, protective, and safety devices owned or controlled by the Interconnection Customer or the quality of power produced by the Generating Facility. If determined necessary by the Utility for safe and reliable operation of the Interconnection Facilities and/or Generating Facility, the Utility may also initiate its own inspection and testing activities at the Interconnection Customer's expense prior to authorizing parallel operation of the Generating Facility.

ELECTRONICALLY FILED - 2019 February 4 1:18:57 PM SCPSC Docket 2019-305-E - Page 20 of 262

ELECTRONICALLY FILED - 2019 February 18 3:57 PM - SCGIP - Docket # 2019-05-E - Page 12 of 62

2.2 Authorization Required Prior to Parallel Operation

2.2.1 The Utility shall use Reasonable Efforts to list applicable parallel operation requirements in Appendix 5 of this Agreement. Additionally, the Utility shall notify the Interconnection Customer of any changes to these requirements as soon as they are known. The Utility shall make Reasonable Efforts to cooperate with the Interconnection Customer in meeting requirements necessary for the Interconnection Customer to commence parallel operations by the in-service date.

2.2.2 The Interconnection Customer shall not operate its Generating Facility in parallel with the Utility's System without prior written authorization of the Utility. The Utility will provide such authorization once the Utility receives notification that the Interconnection Customer has complied with all applicable parallel operation requirements, including but not limited to additional Operating Requirements presented in Appendix 5 of this Agreement. Such authorization shall not be unreasonably withheld, conditioned, or delayed.

2.3 Right of Access

2.3.1 Upon reasonable notice, the Utility may send a qualified person to the premises of the Interconnection Customer at or immediately before the time the Generating Facility first produces energy to inspect the interconnection, and observe the commissioning of the Generating Facility (including any required testing), startup, and operation for a period of up to three (3) Business Days after initial start-up of the unit. In addition, the Interconnection Customer shall notify the Utility at least five (5) Business Days prior to conducting any on-site verification testing of the Generating Facility.

2.3.2 Following the initial inspection process described above, at reasonable hours, and upon reasonable notice, or at any time without notice in the event of an emergency or hazardous condition, the Utility shall have access to the Interconnection Customer's premises for any reasonable purpose in connection with the performance of the obligations imposed on it by this Agreement or if necessary to meet its legal obligation to provide service to its customers.

2.3.3 Each Party shall be responsible for its own costs associated with following this Article.

ELECTRONICALLY FILED - 2019 February 18 3:57 PM - SCGIP - Docket # 2019-05-E - Page 22 of 62

Article 3. **Effective Date, Term, Termination, and Disconnection**

3.1 Effective Date

This Agreement shall become effective upon execution by the Parties.

3.2 Term of Agreement

This Agreement shall become effective on the Effective Date and shall remain in effect for a period of ten (10) years from the Effective Date or such other longer period as the Interconnection Customer may request and shall be automatically renewed for each successive one-year period thereafter, unless terminated earlier in accordance with Article 3.3 of this Agreement.

3.3 Termination

No termination shall become effective until the Parties have complied with all Applicable Laws and Regulations applicable to such termination.

3.3.1 The Interconnection Customer may terminate this Agreement at any time by giving the Utility 20 Business Days written notice and physically and permanently disconnecting the Generating Facility from the Utility's System.

3.3.2 The Utility may terminate this Agreement for failure to comply with the requirements of Article 7.1.2 or Article 7.1.3.

3.3.3 Either Party may terminate this Agreement after Default pursuant to Article 7.6.

3.3.4 Upon termination of this Agreement, the Generating Facility will be disconnected from the Utility's System. All costs required to effectuate such disconnection shall be borne by the terminating Party, unless such termination resulted from the non-terminating Party's Default of this Agreement or such non-terminating Party otherwise is responsible for these costs under this Agreement.

3.3.5 The termination of this Agreement shall not relieve either Party of its liabilities and obligations, owed or continuing at the time of the termination, including any remaining term requirements for payment of Charges that are billed under a monthly payment option as prescribed in Article 6.

3.3.6 The provisions of this article shall survive termination or expiration of this Agreement.

ELECTRONICALLY FILED - 2019 February 4:18 PM PSC SDocket #EE-2019-0055 - Page 32 of 62

3.4 Temporary Disconnection

Temporary disconnection shall continue only for so long as reasonably necessary under Good Utility Practice.

3.4.1 Isolating or Disconnecting the Generating Facility

The Utility may isolate the Interconnection Customer's premises and/or Generating Facility from the Utility's System when necessary in order to construct, install, repair, replace, remove, investigate or inspect any of the Utility's equipment or part of Utility's System; or if the Utility determines that isolation of the Interconnection Customer's premises and/or Generating Facility from the Utility's System is necessary because of emergencies, forced outages, force majeure or compliance with prudent electrical practices. Whenever feasible, the Utility shall give the Interconnection Customer reasonable notice of the isolation of the Interconnection Customer's premises and/or Generating Facility from the Utility's System.

Notwithstanding any other provision of this Agreement, if at any time the Utility determines that the continued operation of the Generating Facility may endanger either (1) the Utility's personnel or other persons or property or (2) the integrity or safety of the Utility's System, or otherwise cause unacceptable power quality problems for other electric consumers, the Utility shall have the right to isolate the Interconnection Customer's premises and/or Generating Facility from the Utility's System.

3.4.2 Emergency Conditions

Under Emergency Conditions, the Utility may immediately suspend interconnection service and temporarily disconnect the Generating Facility. The Utility shall notify the Interconnection Customer promptly when it becomes aware of an Emergency Condition that may reasonably be expected to affect the Interconnection Customer's operation of the Generating Facility. The Interconnection Customer shall notify the Utility promptly when it becomes aware of an Emergency Condition that may reasonably be expected to affect the Utility's System or any Affected Systems. To the extent information is known, the notification shall describe the Emergency Condition, the extent of the damage or deficiency, the expected effect on the operation of both Parties' facilities and operations, its anticipated duration, and the necessary corrective action.

ELECTRONICALLY FILED - 2019 February 18 3:57 PM - SCGIP - Docket 19-05-E - Page 12 of 62

3.4.3 Routine Maintenance, Construction, and Repair

The Utility may interrupt interconnection service or curtail the output of the Generating Facility and temporarily disconnect the Generating Facility from the Utility's System when necessary for routine maintenance, construction, and repairs on the Utility's System. The Utility shall make best efforts to provide the Interconnection Customer reasonable notice prior to such interruption. The Utility shall use Reasonable Efforts to coordinate such reduction or temporary disconnection with the Interconnection Customer.

3.4.4 Forced Outages

During any forced outage, the Utility may suspend interconnection service to effect immediate repairs on the Utility's System. The Utility shall use Reasonable Efforts to provide the Interconnection Customer with prior notice. If prior notice is not given, the Utility shall, upon request, provide the Interconnection Customer written documentation after the fact explaining the circumstances of the disconnection.

3.4.5 Adverse Operating Effects

The Utility shall notify the Interconnection Customer as soon as practicable if, based on Good Utility Practice, operation of the Generating Facility may cause disruption or deterioration of service to other customers served from the same electric system, or if operating the Generating Facility could cause damage to the Utility's System or Affected Systems. Supporting documentation used to reach the decision to disconnect shall be provided to the Interconnection Customer upon request. If, after notice, the Interconnection Customer fails to remedy the adverse operating effect within a reasonable time, the Utility may disconnect the Generating Facility. The Utility shall make best efforts to provide the Interconnection Customer reasonable notice of such disconnection, unless the provisions of Article 3.4.1 apply.

3.4.6 Failure to Maintain Compliance with Operating Requirements

The Utility may disconnect from the Utility's System any Generating Facility determined to be malfunctioning, or not in compliance with this Standard or Operating Requirements. The Interconnection Customer must provide proof of compliance with this Agreement or

Operating Requirements before the Generating Facility will be reconnected.

3.4.7 Modification of the Generating Facility

The Interconnection Customer must receive written authorization from the Utility before making any Material Modification or any other change to the Generating Facility that may have a material impact on the safety or reliability of the Utility's System. Such authorization shall not be unreasonably withheld. Modifications shall be done in accordance with Good Utility Practice. If the Interconnection Customer makes such modification without the Utility's prior written authorization, the latter shall have the right to temporarily disconnect the Generating Facility.

3.4.8 Reconnection

The Parties shall cooperate with each other to restore the Generating Facility, Interconnection Facilities, and the Utility's System to their normal operating state as soon as reasonably practicable following a temporary or emergency disconnection.

Article 4. **Cost Responsibility for Interconnection Facilities and Distribution Upgrades**

4.1 Interconnection Facilities

4.1.1 The Interconnection Customer shall pay for the cost of the Interconnection Facilities itemized in Appendix 2 of this Agreement. The Utility shall provide a best estimate cost, including overheads, for the purchase and construction of its Interconnection Facilities and provide a detailed itemization of such costs. Costs associated with Interconnection Facilities may be shared with other entities that may benefit from such facilities by agreement of the Interconnection Customer, such other entities, and the Utility.

4.1.2 The Interconnection Customer shall be responsible for its share of all reasonable expenses, including overheads, associated with (1) owning, operating, maintaining, repairing, and replacing its own Interconnection Facilities, and (2) operating, maintaining, repairing, and replacing the Utility's Interconnection Facilities.

4.2 Distribution Upgrades

The Utility shall design, procure, construct, install, and own the Distribution Upgrades described in Appendix 6 of this Agreement. The actual cost of the

ELECTRONICALLY FILED - 2019 February 28 4:18 PM PST SCGIP SDocket 2019-E Page 25 of 262

Distribution Upgrades, including overheads, on-going operations, maintenance, repair, and replacement, shall be directly assigned to the Interconnection Customer.

Article 5. **Cost Responsibility for Network Upgrades**

5.1 Applicability

No portion of this Article 5 shall apply unless the interconnection of the Generating Facility requires Network Upgrades.

5.2 Network Upgrades

The Utility shall design, procure, construct, install, and own the Network Upgrades described in Appendix 6 of this Agreement. The cost of the Network Upgrades, including overheads, on-going operations, maintenance, repair, and replacement shall be borne by the Interconnection Customer.

Article 6. **Billing, Payment, Milestones, and Financial Security**

6.1 Billing and Payment Procedures and Final Accounting

The Interconnection Customer shall pay 100% of required Interconnection Facilities, and any other charges as required in Appendix 2 pursuant to the milestones specified in Appendix 4. The Interconnection Customer shall pay 100% of required Upgrades and any other charges as required in Appendix 6 pursuant to the milestones specified in Appendix 4. Upon receipt of 100% of the foregoing pre-payment charges, the payment is not refundable due to cancellation of the Interconnection Request for any reason.

6.1.1 If implemented by the Utility or requested by the Interconnection Customer in writing within 15 Business Days of the Utility completing the construction and installation of the Utility's Interconnection Facilities and/or Upgrades described in the Appendices to this Agreement, the Utility shall provide the Interconnection Customer a final accounting report within 60 Business Days addressing any difference between (1) the Interconnection Customer's cost responsibility for the actual cost of such facilities or Upgrades, and (2) the Interconnection Customer's previous aggregate payments to the Utility for such facilities or Upgrades. If the Interconnection Customer's cost responsibility exceeds its previous aggregate payments, the Utility shall invoice the Interconnection Customer for the amount due and the Interconnection Customer shall make payment to the Utility within 20 Business Days. If the Interconnection Customer's previous aggregate payments exceed its cost

ELECTRONICALLY FILED - 2019 February 20 4:18 PM PST SCGIP SDocket 2019 Page 26 of 62

responsibility under this Agreement, the Utility shall refund to the Interconnection Customer an amount equal to the difference within 20 Business Days of the final accounting report. If necessary and appropriate as a result of the final accounting, the Utility may also adjust the monthly charges set forth in Appendix 2 of the Interconnection Agreement.

6.1.2 The Utility shall bill the Interconnection Customer for the costs associated with operating, maintaining, repairing and replacing the Utility's System Upgrades, as set forth in Appendix 6 of this Agreement. The Utility shall bill the Interconnection Customer for the costs of commissioning and inspection of the Interconnection Customer's Interconnection Facilities and for providing the Utility's Interconnection Facilities including the costs for on-going operations, maintenance, repair and replacement of the Utility's Interconnection Facilities under a Utility rate schedule, tariff, rider or service regulation providing for extra facilities or additional facilities charges, as set forth in Appendix 2 of this Agreement, such monthly charges to continue throughout the entire life of the interconnection.

6.2 Milestones

The Parties shall agree on milestones for which each Party is responsible and list them in Appendix 4 of this Agreement. A Party's obligations under this provision may be extended by agreement, except for timing for Payment or Financial Security-related requirements set forth in the milestones, which shall adhere to Section 5.2.4 of the Standards. If a Party anticipates that it will be unable to meet a milestone for any reason other than a Force Majeure Event, it shall immediately notify the other Party of the reason(s) for not meeting the milestone and (1) propose the earliest reasonable alternate date by which it can attain this and future milestones, and (2) request appropriate amendments to Appendix 4. The Party affected by the failure to meet a milestone shall not unreasonably withhold agreement to such an amendment unless (1) it will suffer significant uncompensated economic or operational harm from the delay, (2) the delay will materially affect the schedule of another Interconnection Customer with subordinate Queue Position, (3) attainment of the same milestone has previously been delayed, or (4) it has reason to believe that the delay in meeting the milestone is intentional or unwarranted notwithstanding the circumstances explained by the Party proposing the amendment.

6.3 Financial Security Arrangements

Pursuant to the Interconnection Agreement Milestones Appendix 4, the Interconnection Customer shall provide the Utility a letter of credit or other financial security arrangement that is reasonably acceptable to the Utility

ELECTRONICALLY FILED - 2019 February 28 4:18 PM - ICC Docket No. 19-0311 - E - Page 27 of 262

and is consistent with the Uniform Commercial Code of South Carolina. Such security for payment shall be in an amount sufficient to cover the costs for constructing, designing, procuring, and installing the applicable portion of the Utility's Interconnection Facilities and Upgrades and shall be reduced on a dollar-for-dollar basis for payments made to the Utility under this Agreement during its term. In addition:

6.3.1 The guarantee must be made by an entity that meets the creditworthiness requirements of the Utility, and contain terms and conditions that guarantee payment of any amount that may be due from the Interconnection Customer, up to an agreed-to maximum amount.

6.3.2 The letter of credit must be issued by a financial institution or insurer reasonably acceptable to the Utility and must specify a reasonable expiration date.

6.3.3 The Utility may waive the security requirements if its credit policies show that the financial risks involved are de minimus, or if the Utility's policies allow the acceptance of an alternative showing of credit-worthiness from the Interconnection Customer.

Article 7. Assignment, Liability, Indemnity, Force Majeure, Consequential Damages, and Default

7.1 Assignment

7.1.1 The Interconnection Customer shall notify the Utility of the pending sale of an existing Generation Facility in writing. The Interconnection Customer shall provide the Utility with information regarding whether the sale is a change of ownership of the Generation Facility to a new legal entity, or a change of control of the existing legal entity.

7.1.2 The Interconnection Customer shall promptly notify the Utility of the final date of sale and transfer date of ownership in writing. The purchaser of the Generation Facility shall confirm to the Utility the final date of sale and transfer date of ownership in writing

7.1.3 This Agreement shall not survive the transfer of ownership of the Generating Facility to a new legal entity owner. The new owner must complete a new Interconnection Request and submit it to the Utility within 20 Business Days of the transfer of ownership or the Utility's Interconnection Facilities shall be removed or disabled and the Generating Facility disconnected from the Utility's System. The Utility shall not study or inspect the Generating Facility unless the new

ELECTRONICALLY FILED - 2019 February 28 4:18 PM - SCPSC - Docket # 2019-305-E - Page 26 of 62

owner's Interconnection Request indicates that a Material Modification has occurred or is proposed.

7.1.4 This Agreement shall survive a change of control of the Generating Facility' legal entity owner, where only the contact information in the Interconnection Agreement must be modified. The new owner must complete a new Interconnection Request and submit it to the Utility within 20 Business Days of the change of control and provide the new contact information. The Utility shall not study or inspect the Generating Facility unless the new owner's Interconnection Request indicates that a Material Modification has occurred or is proposed.

7.1.5 The Interconnection Customer shall have the right to assign this Agreement, without the consent of the Utility, for collateral security purposes to aid in providing financing for the Generating Facility, provided that the Interconnection Customer will promptly notify the Utility of any such assignment. Assignment shall not relieve a Party of its obligations, nor shall a Party's obligations be enlarged, in whole or in part, by reason thereof.

7.1.6 Any attempted assignment that violates this article is void and ineffective.

7.2 Limitation of Liability

Each Party's liability to the other Party for any loss, cost, claim, injury, liability, or expense, including reasonable attorney's fees, relating to or arising from any act or omission in its performance of this Agreement, shall be limited to the amount of direct damage actually incurred. In no event shall either Party be liable to the other Party for any indirect, special, incidental, consequential, or punitive damages of any kind, except as authorized by this Agreement.

7.3 Indemnity

7.3.1 This provision protects each Party from liability incurred to third parties as a result of carrying out the provisions of this Agreement. Liability under this provision is exempt from the general limitations on liability found in Article 7.2.

7.3.2 The Parties shall at all times indemnify, defend, and save the other Party harmless from, any and all damages, losses, claims, including claims and actions relating to injury to or death of any person or damage to property, demand, suits, recoveries, costs and expenses, court costs, attorney fees, and all other obligations by or to third parties, arising out of or resulting from the other Party's action or

ELECTRONICALLY FILED - 2019 February 20 4:18 PM PST SCGIP SDocket 2019-E Page 20 of 62

inaction of its obligations under this Agreement on behalf of the indemnifying Party, except in cases of gross negligence or intentional wrongdoing by the indemnified Party.

7.3.3 If an indemnified Party is entitled to indemnification under this Article as a result of a claim by a third party, and the indemnifying Party fails, after notice and reasonable opportunity to proceed under this Article, to assume the defense of such claim, such indemnified Party may at the expense of the indemnifying Party contest, settle or consent to the entry of any judgment with respect to, or pay in full, such claim.

7.3.4 If an indemnifying Party is obligated to indemnify and hold any indemnified Party harmless under this Article, the amount owing to the indemnified Party shall be the amount of such indemnified Party's actual loss, net of any insurance or other recovery.

7.3.5 Promptly after receipt by an indemnified Party of any claim or notice of the commencement of any action or administrative or legal proceeding or investigation as to which the indemnity provided for in this Article may apply, the indemnified Party shall notify the indemnifying Party of such fact. Any failure of or delay in such notification shall not affect a Party's indemnification obligation unless such failure or delay is materially prejudicial to the indemnifying Party.

7.4 Consequential Damages

Other than as expressly provided for in this Agreement, neither Party shall be liable under any provision of this Agreement for any losses, damages, costs or expenses for any special, indirect, incidental, consequential, or punitive damages, including but not limited to loss of profit or revenue, loss of the use of equipment, cost of capital, cost of temporary equipment or services, whether based in whole or in part in contract, in tort, including negligence, strict liability, or any other theory of liability; provided, however, that damages for which a Party may be liable to the other Party under another agreement will not be considered to be special, indirect, incidental, or consequential damages hereunder.

7.5 Force Majeure

7.5.1 As used in this article, a Force Majeure Event shall mean any act of God, labor disturbance, act of the public enemy, war, insurrection, riot, fire, storm or flood, explosion, breakage or accident to machinery or equipment, any order, regulation or restriction imposed by governmental, military or lawfully established civilian authorities, or

ELECTRONICALLY FILED - 2019 February 20 4:18 PM IPNG SCP SDocDocket 2019-05-E - Page 30 of 62

any other cause beyond a Party's control. A Force Majeure Event does not include an act of negligence or intentional wrongdoing.

7.5.2 If a Force Majeure Event prevents a Party from fulfilling any obligations under this Agreement, the Party affected by the Force Majeure Event (Affected Party) shall promptly notify the other Party, either in writing or via the telephone, of the existence of the Force Majeure Event. The notification must specify in reasonable detail the circumstances of the Force Majeure Event, its expected duration, and the steps that the Affected Party is taking to mitigate the effects of the event on its performance. The Affected Party shall keep the other Party informed on a continuing basis of developments relating to the Force Majeure Event until the event ends. The Affected Party will be entitled to suspend or modify its performance of obligations under this Agreement (other than the obligation to make payments) only to the extent that the effect of the Force Majeure Event cannot be mitigated by the use of Reasonable Efforts. The Affected Party will use Reasonable Efforts to resume its performance as soon as possible.

7.6 Default

7.6.1 No Default shall exist where such failure to discharge an obligation (other than the payment of money or provision of Financial Security) is the result of a Force Majeure Event as defined in this Agreement or the result of an act or omission of the other Party. Upon a Default, the non-defaulting Party shall give written notice of such Default to the defaulting Party. Except as provided in Article 7.6.2, the defaulting Party shall have five (5) Business Days from receipt of the Default notice within which to cure such Default.

7.6.2 If a Default is not cured as provided in this Article, the non-defaulting Party shall have the right to terminate this Agreement by written notice at any time until cure occurs, and be relieved of any further obligation hereunder and, whether or not that Party terminates this Agreement, to recover from the defaulting Party all amounts due hereunder, plus all other damages and remedies to which it is entitled at law or in equity. The provisions of this article will survive termination of this Agreement.

Article 8. **Insurance**

8.1 The Interconnection Customer shall obtain and retain, for as long as the Generating Facility is interconnected with the Utility's System, liability insurance which protects the Interconnection Customer from claims for bodily injury and/or property damage. The amount of such insurance shall

ELECTRONICALLY FILED - 2019 February 20 4:18 PM PST SCGIP SDocket 2019 0005E-E Page 13 of 62

be sufficient to insure against all reasonably foreseeable direct liabilities given the size and nature of the generating equipment being interconnected, the interconnection itself, and the characteristics of the system to which the interconnection is made. This insurance shall be primary for all purposes. The Interconnection Customer shall provide certificates evidencing this coverage as required by the Utility. Such insurance shall be obtained from an insurance provider authorized to do business in South Carolina. The Utility reserves the right to refuse to establish or continue the interconnection of the Generating Facility with the Utility's System, if such insurance is not in effect.

8.1.1 For an Interconnection Customer that is a residential customer of the Utility proposing to interconnect a Generating Facility no larger than 250 kW, the required coverage shall be a standard homeowner's insurance policy with liability coverage in the amount of at least $100,000 per occurrence.

8.1.2 For an Interconnection Customer that is a non-residential customer of the Utility proposing to interconnect a Generating Facility no larger than 250 kW, the required coverage shall be comprehensive general liability insurance with coverage in the amount of at least $300,000 per occurrence.

8.1.3 For an Interconnection Customer that is a non-residential customer of the Utility proposing to interconnect a Generating Facility greater than 250 kW, the required coverage shall be comprehensive general liability insurance with coverage in the amount of at least $1,000,000 per occurrence.

8.1.4 An Interconnection Customer of sufficient credit-worthiness may propose to provide this insurance via a self-insurance program if it has a self-insurance program established in accordance with commercially acceptable risk management practices, and such a proposal shall not be unreasonably rejected.

8.2 The Utility agrees to maintain general liability insurance or self-insurance consistent with the Utility's commercial practice. Such insurance or self-insurance shall not exclude coverage for the Utility's liabilities undertaken pursuant to this Agreement.

8.3 The Parties further agree to notify each other whenever an accident or incident occurs resulting in any injuries or damages that are included within the scope of coverage of such insurance, whether or not such coverage is sought.

ELECTRONICALLY FILED - 2019 February 4 1:18:57 PM - SCPSC - Docket # 2019-305-E - Page 23 of 62

ELECTRONICALLY FILED - 2019 February 28 4:18 PM - SCPSC - Docket # 2019-305-E - Page 33 of 62

Article 9. **Confidentiality**

9.1 Confidential Information shall mean any confidential and/or proprietary information provided by one Party to the other Party that is clearly marked or otherwise designated "Confidential." For purposes of this Agreement all design, operating specifications, and metering data provided by the Interconnection Customer shall be deemed Confidential Information regardless of whether it is clearly marked or otherwise designated as such.

9.2 Confidential Information does not include information previously in the public domain, required to be publicly submitted or divulged by Governmental Authorities (after notice to the other Party and after exhausting any opportunity to oppose such publication or release), or necessary to be divulged in an action to enforce this Agreement. Each Party receiving Confidential Information shall hold such information in confidence and shall not disclose it to any third party nor to the public without the prior written authorization from the Party providing that information, except to fulfill obligations under this Agreement, or to fulfill legal or regulatory requirements.

9.1.1 Each Party shall employ at least the same standard of care to protect Confidential Information obtained from the other Party as it employs to protect its own Confidential Information.

9.1.2 Each Party is entitled to equitable relief, by injunction or otherwise, to enforce its rights under this provision to prevent the release of Confidential Information without bond or proof of damages, and may seek other remedies available at law or in equity for breach of this provision.

9.1.3 All information pertaining to a project will be provided to the new owner in the case of a change of control of the existing legal entity or a change of ownership to a new legal entity.

9.3 If information is requested by the Commission from one of the Parties that is otherwise required to be maintained in confidence pursuant to this Agreement, the Party shall provide the requested information to the Commission within the time provided for in the request for information. In providing the information to the Commission, the Party may request that the information be treated as confidential and non-public in accordance with South Carolina law and that the information be withheld from public disclosure.

Article 10. **Disputes**

10.1 The Parties agree to attempt to resolve all disputes arising out of the interconnection process according to the provisions of this Article.

10.2 In the event of a dispute, either Party shall provide the other Party with a written notice of dispute. Such notice shall describe in detail the nature of the dispute.

10.3 If the dispute has not been resolved within 20 Business Days after receipt of the notice, either Party may contact the Office of Regulatory Staff for assistance in informally resolving the dispute. If the Parties are unable to informally resolve the dispute, either Party may then file a formal complaint with the Commission.

10.4 Each Party agrees to conduct all negotiations in good faith.

Article 11. **Taxes**

11.1 The Parties agree to follow all applicable tax laws and regulations, consistent with South Carolina and federal policy and revenue requirements.

11.2 Each Party shall cooperate with the other to maintain the other Party's tax status. Nothing in this Agreement is intended to adversely affect the Utility's tax exempt status with respect to the issuance of bonds including, but not limited to, local furnishing bonds.

Article 12. **Miscellaneous**

12.1 Governing Law, Regulatory Authority, and Rules

The validity, interpretation and enforcement of this Agreement and each of its provisions shall be governed by the laws of the State of South Carolina, without regard to its conflicts of law principles. This Agreement is subject to all Applicable Laws and Regulations. Each Party expressly reserves the right to seek changes in, appeal, or otherwise contest any laws, orders, or regulations of a Governmental Authority.

12.2 Amendment

The Parties may amend this Agreement by a written instrument duly executed by both Parties, or under Article 12.12 of this Agreement.

ELECTRONICALLY FILED - 2019 February 28 4:18 PM - SCPSC - Docket # 2019-305-E - Page 43 of 62

12.3 No Third-Party Beneficiaries

This Agreement is not intended to and does not create rights, remedies, or benefits of any character whatsoever in favor of any persons, corporations, associations, or entities other than the Parties, and the obligations herein assumed are solely for the use and benefit of the Parties, their successors in interest and where permitted, their assigns.

12.4 Waiver

12.4.1 The failure of a Party to this Agreement to insist, on any occasion, upon strict performance of any provision of this Agreement will not be considered a waiver of any obligation, right, or duty of, or imposed upon, such Party.

12.4.2 Any waiver at any time by either Party of its rights with respect to this Agreement shall not be deemed a continuing waiver or a waiver with respect to any other failure to comply with any other obligation, right, duty of this Agreement. Termination or default of this Agreement for any reason by Interconnection Customer shall not constitute a waiver of the Interconnection Customer's legal rights to obtain an interconnection from the Utility. Any waiver of this Agreement shall, if requested, be provided in writing.

12.5 Entire Agreement

This Agreement, including all Appendices, constitutes the entire agreement between the Parties with reference to the subject matter hereof, and supersedes all prior and contemporaneous understandings or agreements, oral or written, between the Parties with respect to the subject matter of this Agreement. There are no other agreements, representations, warranties, or covenants which constitute any part of the consideration for, or any condition to, either Party's compliance with its obligations under this Agreement.

12.6 Multiple Counterparts

This Agreement may be executed in two or more counterparts, each of which is deemed an original but all constitute one and the same instrument.

12.7 No Partnership

This Agreement shall not be interpreted or construed to create an association, joint venture, agency relationship, or partnership between the Parties or to impose any partnership obligation or partnership liability upon either Party. Neither Party shall have any right, power or authority to enter

ELECTRONICALLY FILED - 2019 February 21 4:18 PM PST SCP SOeDRetrieved 2/21/2019 3:05:11 PM - E Page 53 of 62

into any agreement or undertaking for, or act on behalf of, or to act as or be an agent or representative of, or to otherwise bind, the other Party.

12.8 Severability

If any provision or portion of this Agreement shall for any reason be held or adjudged to be invalid or illegal or unenforceable by any court of competent jurisdiction or other Governmental Authority, (1) such portion or provision shall be deemed separate and independent, (2) the Parties shall negotiate in good faith to restore insofar as practicable the benefits to each Party that were affected by such ruling, and (3) the remainder of this Agreement shall remain in full force and effect.

12.9 Security Arrangements

Infrastructure security of electric system equipment and operations and control hardware and software is essential to ensure day-to-day reliability and operational security. All Utilities are expected to meet basic standards for electric system infrastructure and operational security, including physical, operational, and cyber-security practices.

12.10 Environmental Releases

Each Party shall notify the other Party, first orally and then in writing, of the release of any hazardous substances, any asbestos or lead abatement activities, or any type of remediation activities related to the Generating Facility or the Interconnection Facilities, each of which may reasonably be expected to affect the other Party. The notifying Party shall (1) provide the notice as soon as practicable, provided such Party makes a good faith effort to provide the notice no later than 24 hours after such Party becomes aware of the occurrence, and (2) promptly furnish to the other Party copies of any publicly available reports filed with any Governmental Authorities addressing such events.

12.11 Subcontractors

Nothing in this Agreement shall prevent a Party from utilizing the services of any subcontractor as it deems appropriate to perform its obligations under this Agreement; provided, however, that each Party shall require its subcontractors to comply with all applicable terms and conditions of this Agreement in providing such services and each Party shall remain primarily liable to the other Party for the performance of such subcontractor.

12.11.1 The creation of any subcontract relationship shall not relieve the hiring Party of any of its obligations under this Agreement. The hiring Party shall be fully responsible to the other Party for the

ELECTRONICALLY FILED - 2019 February 20 4:18 PM - SCGIP SDocket 2019-05-E - Page 36 of 62

acts or omissions of any subcontractor the hiring Party hires as if no subcontract had been made; provided, however, that in no event shall the Utility be liable for the actions or inactions of the Interconnection Customer or its subcontractors with respect to obligations of the Interconnection Customer under this Agreement. Any applicable obligation imposed by this Agreement upon the hiring Party shall be equally binding upon, and shall be construed as having application to, any subcontractor of such Party.

12.11.2 The obligations under this article will not be limited in any way by any limitation of subcontractor's insurance.

12.12 Reservation of Rights

The Utility shall have the right to make a unilateral filing with the Commission to modify this Agreement with respect to any rates, terms and conditions, charges, or classifications of service, and the Interconnection Customer shall have the right to make a unilateral filing with the Commission to modify this Agreement; provided that each Party shall have the right to protest any such filing by the other Party and to participate fully in any proceeding before the Commission in which such modifications may be considered. Nothing in this Agreement shall limit the rights of the Parties except to the extent that the Parties otherwise agree as provided herein.

Article 13. Notices

13.1 General

Unless otherwise provided in this Agreement, any written notice, demand, or request required or authorized in connection with this Agreement (Notice) shall be deemed properly given if delivered in person, delivered by recognized national courier service, sent by first class mail, postage prepaid, or sent electronically to the person specified below:

If to the Interconnection Customer:

Interconnection Customer: Eastover Solar LLC

Attention: Manager

Address: Three Radnor Corporate Center, 100 Matsonford Road, Suite 300

City: Radnor State: PA Zip: 19087

Phone: 866-946-3123 Other: 484-654-2136

Email: info@communityenergyinc.com

ELECTRONICALLY FILED - 2019 February 18 3:57 PM PSC SDocket 2019-05-E - Page 37 of 62

If to the Utility:

Utility: South Carolina Electric & Gas Company

Attention: Manager – Electric Transmission Support

Address: 220 Operation Way, Mail Code J36

City: Cayce State: SC Zip: 29033

Phone: 803-217-2175 Fax: 803-933-7046

Email: ElectricTransmission@scana.com

13.2 Billing and Payment

Billings and payments shall be sent to the addresses set out below:

If to the Interconnection Customer:

Interconnection Customer: Eastover Solar LLC

Attention: Julia Muscella

Address: Three Radnor Corporate Center, 100 Matsonford Road, Suite 300

City: Radnor State: PA Zip: 19087

Phone: 484-654-1861 Other: 484-654-2136

Email: julia.muscella@communityenergyinc.com

ELECTRONICALLY FILED - 2019 February 28 4:18 PM - SCPSC - Docket # 2019-305-E - Page 23 of 62

If to the Utility:

Utility: South Carolina Electric & Gas Company

Attention: Manager – Electric Transmission Support

Address: 220 Operation Way, Mail Code J36

City: Cayce State: SC Zip: 29033

Phone: 803-217-2175 Fax: 803-933-7046

Email: ElectricTransmission@scana.com

13.3 Alternative Forms of Notice

Any notice or request required or permitted to be given by either Party to the other and not required by this Agreement to be given in writing may be so given by telephone, facsimile or e-mail to the telephone numbers and e-mail addresses set out below:

If to the Interconnection Customer:

Interconnection Customer: Eastover Solar LLC

Attention: Brent Beerley

Address: Three Radnor Corporate Center, 100 Matsonford Road, Suite 300

City: Radnor State: PA Zip: 19087

Phone: 215-778-3898 Other: 484-654-2136

Email: brent.beerley@communityenergyinc.com

ELECTRONICALLY FILED - 2019 February 28 4:18 PM - SCPSC - Docket # 2019-305-E - Page 36 of 62

If to the Utility:

Utility: South Carolina Electric & Gas Company

Attention: Manager – Electric Transmission Support

Address: 220 Operation Way, Mail Code J36

City: Cayce State: SC Zip: 29033

Phone: 803-217-2175 Fax: 803-933-7046

Email: ElectricTransmission@scana.com

13.4 Designated Operating Representative

The Parties may also designate operating representatives to conduct the communications which may be necessary or convenient for the administration of this Agreement. This person will also serve as the point of contact with respect to operations and maintenance of the Party's facilities.

Interconnection Customer's Operating Representative:

Interconnection Customer: Eastover Solar LLC

Attention: Chris Killenberg

Address: 151 E. Rosemary Street, Suite 202

City: Chapel Hill State: NC Zip: 27514

Phone: 919-360-9792 Other: 484-654-2136

Email: chirs.killenberg@communityenergyinc.com

ELECTRONICALLY FILED - 2019 February 18 3:57 PM - SCPSC - Docket # 2019-305-E - Page 40 of 62

Utility's Operating Representative:

Utility: South Carolina Electric & Gas Company

Attention: Manager – Electric Transmission Support

Address: 220 Operation Way, Mail Code J36

City: Cayce State: SC Zip: 29033

Phone: 803-217-2175 Fax: 803-933-7046

Email: ElectricTransmission@scana.com

13.5 Changes to the Notice Information

Either Party may change this information by giving five Business Days written notice prior to the effective date of the change.

ELECTRONICALLY FILED - 2019 February 28 4:18 PM - SCPSC - Docket # 2019-305-E - Page 14 of 62

IN WITNESS WHEREOF, the Parties have caused this Agreement to be executed by their respective duly authorized representatives.

For the Utility

Name: P. Xanthakos

Print Name: Pandelis N. Xanthakos

Title: VP – Electric Transmission

Date: 11/13/18

For the Interconnection Customer

Name: B. A. Beerley

Print Name: Brent Beerley

Title: Manager

Date: 11/12/18

ELECTRONICALLY FILED - 2019 February 4 1:18 PM PSC SDocket # 2019-305-E - Page 24 of 62

See Glossary of Terms, Attachment 1 to the South Carolina Generator Interconnection Procedures.

For ease of reference, the Glossary of Terms is reproduced herein.

Glossary of Terms

20 kW Inverter Process – The procedure for evaluating an Interconnection Request for a certified inverter-based Generating Facility no larger than 20 kW that uses the Section 2 screens. The application process uses an all-in-one document that includes a simplified Interconnection Request Application Form, simplified procedures, and a brief set of Terms and Conditions. (See Attachment 7)

Affected System – An electric system other than the Utility's System that may be affected by the proposed interconnection. The owner of an Affected System might be a Party to the Interconnection Agreement or other study agreements needed to interconnect the Generating Facility.

Applicable Laws and Regulations – All duly promulgated applicable federal, state and local laws, regulations, rules, ordinances, codes, decrees, judgments, directives, or judicial or administrative orders, permits and other duly authorized actions of any Governmental Authority.

Auxiliary Load – The term "Auxiliary Load" shall mean power used to operate auxiliary equipment in the facility necessary for power generation (such as pumps, blowers, fuel preparation machinery, exciters, etc.).

Business Day – Monday through Friday, excluding State Holidays.

Commission – The Public Service Commission of South Carolina.

Default – The failure of a breaching Party to cure its breach under the Interconnection Agreement.

Distribution System – The Utility's facilities and equipment used to transmit electricity to ultimate usage points such as homes and industries from nearby generators or from interchanges with higher voltage transmission networks which transport bulk power over longer distances. The voltage levels at which Distribution Systems operate differ among areas.

Distribution Upgrades – The additions, modifications, and upgrades to the Utility's Distribution System at or beyond the Point of Interconnection to facilitate interconnection of the Generating Facility and render the service necessary to allow the Generating Facility to operate in parallel with the Utility and to inject electricity onto the Utility's System. Distribution Upgrades do not include Interconnection Facilities.

ELECTRONICALLY FILED - 2019 February 28 4:18 PM - SCPSC - Docket # 2019-305-E - Page 34 of 62

ELECTRONICALLY FILED - 2019 February 14 3:57 PM - SCPSC - Docket # 2019-305-E - Page 14 of 62

Emergency Condition – The term "Emergency Condition" shall mean a condition or situation: (1) that in the judgment of the Party making the claim is imminently likely to endanger life or property; or (2) that, in the case of the Utility, is imminently likely (as determined in a non-discriminatory manner) to cause a material adverse effect on the security of, or damage to the Utility's System, the Utility's Interconnection Facilities or the systems of others to which the Utility's System is directly connected; or (3) that, in the case of the Interconnection Customer, is imminently likely (as determined in a non-discriminatory manner) to cause a material adverse effect on the security of, or damage to, the Generating Facility or the Interconnection Customer's Interconnection Facilities.

Fast Track Process – The procedure for evaluating an Interconnection Request for a certified Generating Facility that meets the eligibility requirements of Section 3.1.

FERC – The Federal Energy Regulatory Commission.

Generating Facility – The Interconnection Customer's device for the production and/or storage for later injection of electricity identified in the Interconnection Request, but shall not include the Interconnection Customer's Interconnection Facilities.

Good Utility Practice – Any of the practices, methods and acts engaged in or approved by a significant portion of the electric industry during the relevant time period, or any of the practices, methods and acts which, in the exercise of reasonable judgment in light of the facts known at the time the decision was made, could have been expected to accomplish the desired result at a reasonable cost consistent with good business practices, reliability, safety and expedition. Good Utility Practice is not intended to be limited to the optimum practice, method, or act to the exclusion of all others, but rather to be acceptable practices, methods, or acts generally accepted in the region.

Governmental Authority – Any federal, state, local or other governmental regulatory or administrative agency, court, commission, department, board, or other governmental subdivision, legislature, rulemaking board, tribunal, or other governmental authority having jurisdiction over the Parties, their respective facilities, or the respective services they provide, and exercising or entitled to exercise any administrative, executive, police, or taxing authority or power; provided, however, that such term does not include the Interconnection Customer, the Utility, or any affiliate thereof.

Interconnection Agreement – Means the South Carolina Generator Interconnection Agreement (See Attachment 10).

In-Service Date – The date upon which the construction of the Utility's facilities is completed and the facilities are capable of being placed into service.

Interconnection Customer – Any valid legal entity, including the Utility, that proposes to interconnect its Generating Facility with the Utility's System.

Interconnection Facilities – Collectively, the Utility's Interconnection Facilities and the Interconnection Customer's Interconnection Facilities. Collectively, Interconnection Facilities include all facilities and equipment between the Generating Facility and the Point of Interconnection, including any modification, additions or upgrades that are necessary to

physically and electrically interconnect the Generating Facility to the Utility's System. Interconnection Facilities are sole use facilities and shall not include Upgrades.

Interconnection Facilities Delivery Date – The Interconnection Facilities Delivery Date shall be the date upon which the Utility's Interconnection Facilities are first made operational for the purposes of receiving power from the Interconnection Customer.

Interconnection Request – The Interconnection Customer's request, in accordance with these procedures, to interconnect a new Generating Facility, or to increase the capacity of, or make a Material Modification to, an existing Generating Facility that is interconnected with the Utility's System.

Material Modification – A modification to machine data or equipment configuration or to the interconnection site of the Generating Facility that has a material impact on the cost, timing or design of any Interconnection Facilities or Upgrades. Material Modifications include project revisions proposed at any time after receiving notification by the Utility of a complete Interconnection Request pursuant to Section 1.3.3 that 1) alters the size or output characteristics of the Generating Facility from its Utility-approved Interconnection Request submission; or 2) may adversely impact other Interconnection Requests with higher Queue Numbers.

Indicia of a Material Modification, include, but are not limited to:

- A change in Point of Interconnection (POI) to a new location, unless the change in a POI is on the same circuit less than two (2) poles away from the original location, and the new POI is within the same protection zone as the original location;
- A change or replacement of generating equipment such as generator(s), inverter(s), transformers, relaying, controls, etc. that is not a direct substitution in size, ratings, impedances, efficiencies or capabilities of the equipment specified in the original or preceding Interconnection Request;
- A change from certified to non-certified devices ("certified" means certified by an OSHA recognized Nationally Recognized Test Laboratory (NRTL), to relevant UL and IEEE standards, authorized to perform tests to such standards);
- A change of transformer connection(s) or grounding from that originally proposed;
- A change to certified inverters with different specifications or different inverter control specifications or set-up than originally proposed;
- An increase of the AC output of a Generating Facility; or
- A change reducing the AC output of the generating facility by more than 10%.

The following are not indicia of a Material Modification:

- A change in ownership of a Generating Facility; the new owner, however, will be required to execute a new Interconnection Agreement and study agreement(s) for any study which has not been completed and the report issued by the Utility.
- A change or replacement of generating equipment such as generator(s), inverter(s), solar panel(s), transformers, relaying, controls, etc. that is a direct substitution in size, ratings, impedances, efficiencies or capabilities of the equipment specified in the original or preceding Interconnection Request;

ELECTRONICALLY FILED - 2019 February 21 4:18 PM - SCGIP - Docket 2019-305-E - Page 5 of 262

- An increase in the DC/AC ratio that does not increase the maximum AC output capability of the generating facility;
- A decrease in the DC/AC ratio that does not reduce the AC output capability of the generating facility by more than 10%.

Maximum Physical Export Capability Requested – The term shall mean the maximum continuous electrical output of the Generating Facility at any time at a power factor of approximately unity as measured at the Point of Interconnection and the maximum kW delivered to the Utility during any metering period.

Month – The term "Month" means the period intervening between readings for the purpose of routine billing, such readings usually being taken once per month.

Nameplate Capacity – The term "Nameplate Capacity" shall mean the manufacturer's nameplate rated output capability of the generator, based on alternating current (AC). For multi-unit generator facilities, the "Nameplate Capacity" of the facility shall be the sum of the individual manufacturer's nameplate rated output capabilities of the generators. For inverter-based Generating Facilities, the maximum rated capacity or "Nameplate Capacity" shall be the sum of the inverters maximum rated capacity AC in megawatts.

Net Capacity – The term "Net Capacity" shall mean the Nameplate Capacity of the Interconnection Customer's generating facilities, less the portion of that capacity needed to serve the Generating Facility's Auxiliary Load.

Net Power – The term "Net Power" shall mean the total amount of electric power produced by the Interconnection Customer's Generating Facility less the portion of that power used to supply the Generating Facility's Auxiliary Load.

Network Resource Interconnection Service – An Interconnection Service that allows the Interconnection Customer to integrate its Generating Facility with the Utility's System (1) in a manner comparable to that in which the Utility integrates its generating facilities to serve native load customers; or (2) in an RTO or ISO with market based congestion management, in the same manner as Network Resources. Network Resource Interconnection Service in and of itself does not convey transmission service.

Network Upgrades – Additions, modifications, and upgrades to the Utility's Transmission System required to accommodate the interconnection of the Generating Facility to the Utility's System. Network Upgrades do not include Distribution Upgrades.

Office of Regulatory Staff – The Office of Regulatory Staff of South Carolina.

Operating Requirements – Any operating and technical requirements that may be applicable due to Regional Reliability Organization, Independent System Operator, control area, or the Utility's requirements, including those set forth in the Interconnection Agreement.

Party or Parties – The Utility, Interconnection Customer, and possibly the owner of an Affected System, or any combination of the above.

ELECTRONICALLY FILED - 2019 May 20 4:18 PM - SCPSC - Docket # 2019-305-E - Page 6 of 62

Point of Interconnection – The point where the Interconnection Facilities connect with the Utility's System.

Queue Number – The number assigned by the Utility that establishes an Interconnection Customer's Interconnection Request's position in the study queue relative to all other valid Interconnection Requests. A lower Queue Number will be studied prior to a higher Queue Number. The Queue Number of each Interconnection Request shall be used to determine the cost responsibility for the Upgrades necessary to accommodate the interconnection.

Queue Position – The order of a valid Interconnection Request, relative to all other pending valid Interconnection Requests, based on Queue Number.

Reasonable Efforts – With respect to an action required to be attempted or taken by a Party under the Interconnection Agreement, efforts that are timely and consistent with Good Utility Practice and are otherwise substantially equivalent to those a Party would use to protect its own interests.

South Carolina Generator Interconnection Procedures – The term "South Carolina Generator Interconnection Procedures" shall refer to the South Carolina Generator Interconnection Procedures, Forms, and Agreements for State-Jurisdictional Generator Interconnections as approved by the Public Service Commission of South Carolina.

Standard – The interconnection procedures, forms and agreements approved by the Commission for interconnection of Generating Facilities to Utility Systems in South Carolina.

Study Process – The procedure for evaluating an Interconnection Request that includes the Section 4 scoping meeting, system impact study, and facilities study.

System – The facilities owned, controlled or operated by the Utility that are used to provide electric service in South Carolina.

Utility – The entity that owns, controls, or operates facilities used for providing electric service in South Carolina.

Transmission System – The facilities owned, controlled or operated by the Utility that are used to transmit electricity in South Carolina.

Upgrades – The required additions and modifications to the Utility's System at or beyond the Point of Interconnection. Upgrades may be Network Upgrades or Distribution Upgrades. Upgrades do not include Interconnection Facilities.

ELECTRONICALLY FILED - 2019 February 28 4:18 PM - SCPSC - Docket # 2019-305-E - Page 7 of 262

Description and Costs of the Generating Facility, Interconnection Facilities, and Metering Equipment

Equipment, including the Generating Facility, Interconnection Facilities, and metering equipment shall be itemized and identified as being owned by the Interconnection Customer, or the Utility. The Utility will provide a best estimate itemized cost, including overheads, of its Interconnection Facilities and metering equipment, and a best estimate itemized cost of the annual operation and maintenance expenses associated with its Interconnection Facilities and metering equipment.

Charges for the Interconnection Facilities will begin on the In-Service Date specified in the Milestones in Appendix 4, regardless of whether the Generating Facility is interconnected or generating. If required, the Letter of Credit may be drawn upon to pay for the Interconnection Facilities charges.

Eastover Solar LLC ("Eastover" or "Facility") is a solar photovoltaic Generating Facility located near the intersection of Vanboklen Road and Pine Thicket Road, in Richland County, South Carolina. The Facility represents that it is a Qualifying Facility ("QF") as defined by the FERC Regulation 18 C.F.R. § 292.204. The Facility will comply with FERC Regulation 18 C.F.R. § 292.207 by serving South Carolina Electric & Gas Company ("SCE&G" or "Utility") with either: (1) a copy of the Facility's self-certification of qualifying facility status on Form No. 556; or (2) a copy of the Facility's application for FERC certification of qualifying facility status, which includes a Form No. 556, as well as any supplemental materials the Facility files in the corresponding docket at FERC and any FERC action taken with regard to the application.

The Facility consists of twenty-three 3200 kVA TMEIC Solar Ware Samurai PVH-L3200GR inverters and has a total nameplate capacity of 73,600 kW AC. Each inverter will be programmed such that the maximum allowable output shall not exceed its nameplate kW rating. The Facility will interconnect to the existing SCE&G Wateree – Killian 230 kV transmission line.

The Interconnection Customer's Interconnection Facilities will include a three phase gang-operated disconnect switch and the necessary conductor and terminations necessary to reach SCE&G's switch in the switching station. The Interconnection Customer's generator step up transformer will be a Delta – Wye winding configuration with Delta on the high side.

The Utility's Interconnection Facilities will include a 230 kV ring bus switching station and two spans of transmission conductor from the 230 kV line to the SCE&G owned switching station for each of the two lines connecting to the switching station and related equipment. The switching station shall include, but is not limited to, circuit breakers, structures, foundations, switches, potential transformers, current transformers, batteries, metering, SCADA, station service, lightning arrestors, gravel, fencing and a ground grid. The equipment and its installation are estimated to cost $4,581,100. The estimated cost assumes the switching station is adjacent to or within 600 feet of SCE&G's existing right

ELECTRONICALLY FILED - 2019 February 28 4:18 PM - SCPSC - Docket # 2019-305-E - Page 68 of 262

of way. The estimated cost and the estimated time to complete the Interconnection Facilities assume that support pilings are not required in the Transmission Provider's switching station. If it is determined that support pilings are required, the estimated cost and time required to complete the switching station may increase.

The Interconnection Customer will pay to the Utility an Operations and Maintenance Fee each month. This fee will be based on the actual cost of the Interconnection Facilities installed by the Utility and is estimated to be $45,811 monthly. The Operations and Maintenance Fee will begin on the In-Service Date specified in the Milestones in Appendix 4.

The Interconnection Customer will pay the estimated Interconnection Facilities and Upgrades, in Appendix 6, which together total $4,601,100.00,which is the basis for the Milestone Payments in Appendix 4 of this Agreement. Failure to make the payment may result in the termination of the Generator Interconnection Agreement and the withdrawal of the Generator Interconnection Application.

The Interconnection Customer represents that it meets the safe harbor requirements of Treasury Notice 2016-36, *Transfers of Property to Regulated Public Utilities by Electric Generators.* As such, the payments for Interconnection Facilities and Upgrades made by the Interconnection Customer to the Utility will not be treated as a taxable Contribution In Aid of Construction ("CIAC") or give rise to taxable gross income. Should, in the future, the IRS, or another regulatory body, require the payments for Interconnection Facilities and Upgrades be treated in a manner that gives rise to taxable gross income, the Interconnection Customer will be responsible for the income tax impact to the Utility associated with that income. At such time, the Utility will compute the tax impacts and invoice the Interconnection Customer for that amount.

Should the Interconnection Customer terminate this Agreement pursuant to Article 3.3 and cancel its interconnection with and operation on the Utility's Transmission System for any reason, either during the initial term or any extension thereof, in addition to any disconnection costs identified in Article 3.3.3, the Interconnection Customer shall pay to the Utility a facilities termination charge equal to (a) the total installed cost of facilities directly assigned to the Interconnection Customer, (b) less any Interconnection Customer contribution to construction, (c) less accumulated depreciation of the facilities funded by the Utility, (d) less salvage value of all facilities directly assigned to the Interconnection Customer, (e) plus the cost of removal (including any associated environmental investigation/remediation costs related to a spill or release of hazardous substances caused by the Interconnection Customer or those paid or incurred by the Utility, which were not the result of negligence on the part of the Utility), all as determined by the Utility in accordance with its standard accounting practices; provided, however, that the termination charge shall not be less than zero. This charge is subject to Article 3.3.4.

The Utility may waive a portion or all of the termination charges where (1) a successor agreement is executed prior to termination of this Agreement, or (2) the Interconnection Customer is able to furnish the Utility with satisfactory evidence that a successor

ELECTRONICALLY FILED - 2019 February 28 4:18 PM - SCGIP - SDocket: 2019-0005-E - Page 40 of 62

customer will occupy the premises within a reasonable time and contract for substantially the same service facilities. The termination charge above shall not preclude additional termination charges imposed by law.

ELECTRONICALLY FILED - 2019 February 14 3:57 PM SCGIP SDocket 2019-05-E - Page 5 of 6 262

One-line Diagram Depicting the Generating Facility, Interconnection Facilities, Metering Equipment, and Upgrades

This agreement will incorporate by reference the one-line diagram submitted by the Customer on 5/16/2018, dated 7/18/2017, with file name "Appendix 3-A Eastover Solar LLC SLD" as part of the Interconnection Request, or as subsequently updated and provided to the Company.

The one-line diagram provided by the Interconnection Customer does not reflect the Utility owned ring bus switching station. This will be corrected in furture revisions to the one-line diagram.

This one-line diagram is provided as Appendix 3-A to this Agreement. In addition, the Interconnection Customer will submit to the Utility an as-built one-line diagram within 30 Business Days of the final inspection by the Utility.

The figures below are the general arrangement of the SCE&G-owned 230 kV switching station.

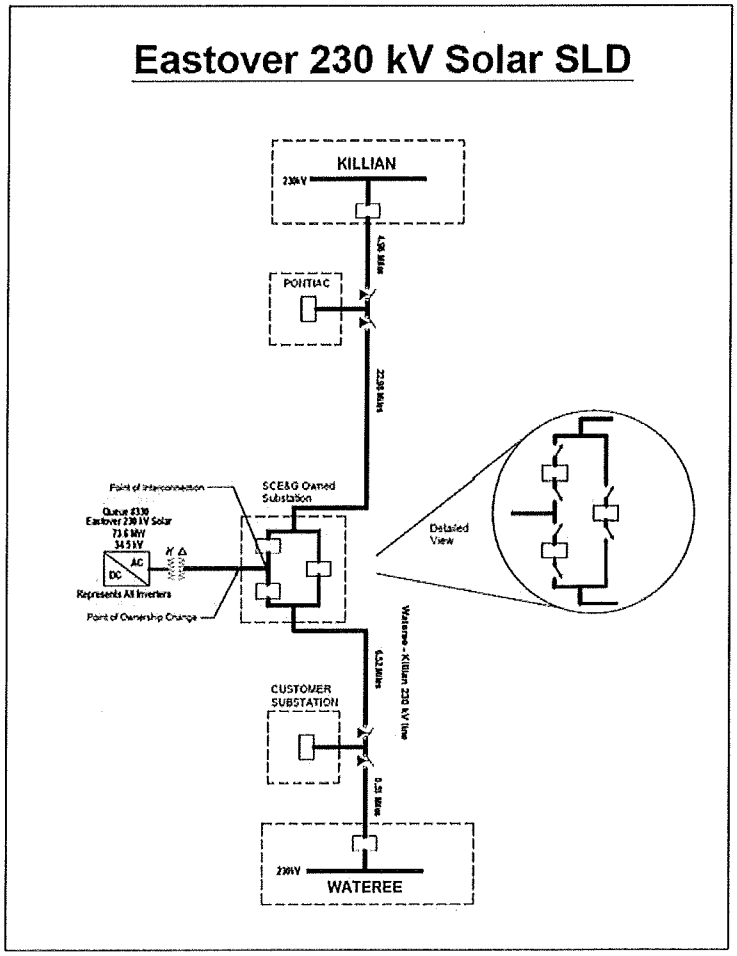

ELECTRONICALLY FILED - 2019 February 18 5:17 PM - SCPSC - Docket # 2019-305-E - Page 15 of 62

The figure below is the typical arrangement of the SCE&G-owned switching station.

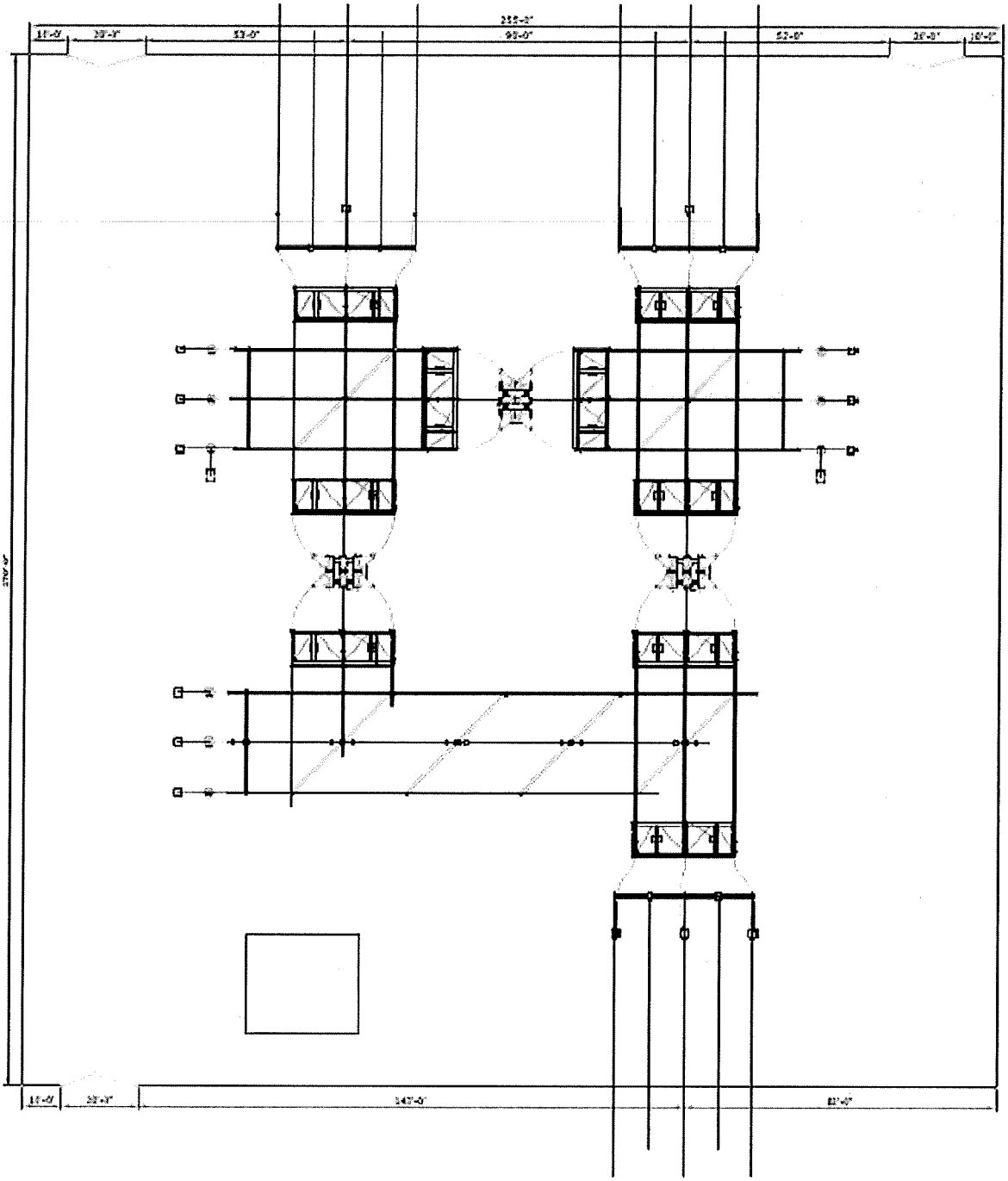

ELECTRONICALLY FILED - 2019 February 28 4:18 PM - SCPSC - Docket # 2019-305-E - Page 25 of 62

ELECTRONICALLY FILED - 2019 February 18 3:17 PM - SCPSC - Docket # 2019-305-E - Page 35 of 62

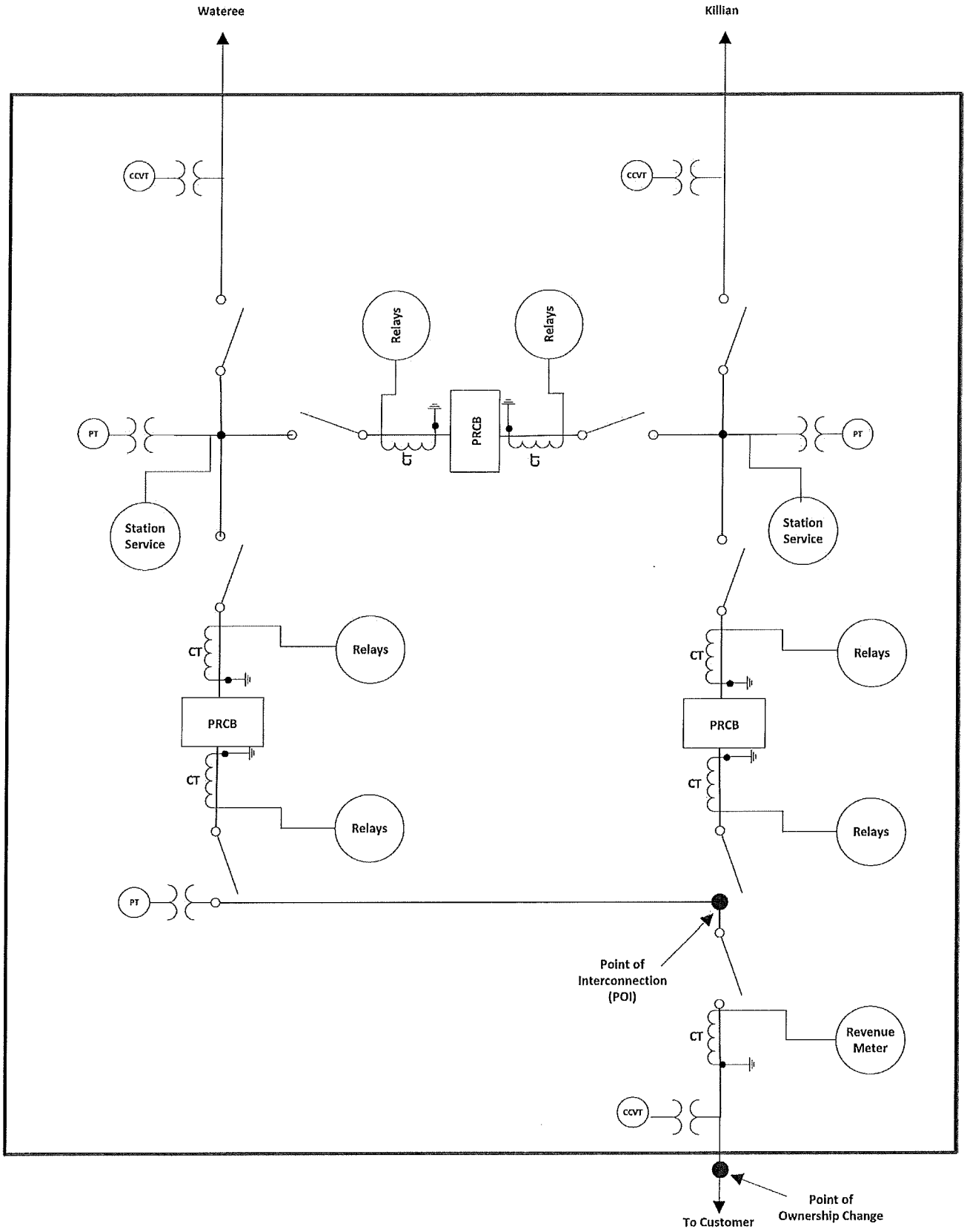

ELECTRONICALLY FILED - 2019 February 18 3:57 PM SCGIP SDocket 2019-05-E - Page 5 of 62

Appendix 3-A

(Page Intentionally Left Blank)

PROPOSED SOLAR SUBSTATION

SCE&G | INTERCONNECTION CUSTOMER

WATEREE

KILLIAN

230kV LINE

300/5 RF=2.0

UTILITY METERING

POINT OF INTERCONNECTION
33°55'2.92"N
80°39'50.35"W
(APPROXIMATE)

APPROXIMATELY 500' NEW TRANSMISSION LINE
795kcmil ACSR CONDUCTOR

1200A 230kV GROUP SWITCH

1200A 230kV GROUP SWITCH

230kV BREAKER 1200A, 40KAIC

48/64/80 MVA
230kV/34.5kV
8.5% IMPEDANCE

35kV GP SW

COLLECTION FEEDER SUBSTATION
(ADJACENT TO POI)

PROJECT LOCATION
VANBOKLEN ROAD
EASTOVER, SC 29044

35kV BREAKER
35kV GP SW
24.0MVAR (EST)
(EXACT SIZE & STAGES TBD)

35kV BREAKER
35kV GP SW
APPROX. 1,500'
1000 KCMIL URD
STEP UP TRANSFORMER
SEE NOTE 7
3200kVA
34,500V/600V
Z=5.5%
8 TOTAL
STEP UP TRANSFORMERS
ON FEEDER
TMEIC 3200kVA INVERTER
AC
DC
TO DC SYSTEM

35kV BREAKER
35kV GP SW
APPROX. 2,500'
1000 KCMIL URD
STEP UP TRANSFORMER
SEE NOTE 7
3200kVA
34,500V/600V
Z=5.5%
7 TOTAL
STEP UP TRANSFORMERS
ON FEEDER
TMEIC 3200kVA INVERTER
AC
DC
TO DC SYSTEM

GENERATION SUMMARY:

GROSS INVERTER OUTPUT = (3.2)(23) = 73.6MW @ 35°C
FLA @ 1.0PF @ 230KV = 185AMPS WITH NO LOSSES

NOTES:

1. UTILITY SCADA INTERFACE TO BE DESIGNED BY OTHERS.
2. METERING TO BE CONFIRMED BY UTILITY.
3. CABLE SIZES AND DISTANCES BETWEEN STEP UP TRANSFORMERS TO BE BASED ON ACTUAL FIELD CONDITIONS. ESTIMATE 750' BETWEEN TRANSFORMERS.
4. INVERTERS WILL HAVE CAPABILITY OF .90 TO .90 PF. INVERTERS ARE TMEIC 32000-US AND TO BE UL1741 LISTED. EACH INVERTER TO BE RATED FOR 3.2MW @ 35°C WITH PF = 1.0. EXACT RATINGS TO BE CONFIRMED DURING FINAL DESIGN. POI PF TO BE .95 TO .95.
5. ESTIMATE TRANS IMPEDANCES
   H-X = 8.5%
6. ALL 230kV AND 34.5kV RELAYING TO BE DESIGNED LATER ALONG WITH UTILITY SCADA INTERFACE(S).
7. STEP-UP TRANSFORMERS SUPPLIED WITH INVERTERS WITH NO LOAD TAPS (±5%, ±2.5%, 0) AND ASSUMED X/R=8.

LEGEND:

------- UG CABLE

——— OH LINE OR BUS

PRELIMINARY
FOR INTERCONNECTION APPLICATION ONLY

REV.	DATE	DRAWN	DESCRIPTION	WORK ORDER	CHKD	APPD	DATE
C	08/14/18	MAK	FOR INTERCONNECTION APPLICATION-CHANGE INVERTER				
B	07/17/17	MAK	FOR INTERCONNECTION APPLICATION-UPDATE POI				
A	07/17/17	MAK	FOR INTERCONNECTION APPLICATION				

CEG CONSULTING ENGINEERS GROUP
LAKEVILLE, MINNESOTA

EASTOVER SOLAR LLC
73.6MW (AC) SOLAR PROJECT
230kV INTERCONNECTION
ONE LINE DIAGRAM

CHECKED
DATE
DRAWN MAK
DATE 07/18/17
SCALE NONE
W.O. NO. SC
DWG. NO. EAST-OL-02RC

Milestones

Requested Upgrade In-Service Date: November 18, 2020

Requested Interconnection Facilities In-Service Date November 18, 2020

Critical milestones and responsibility as agreed to by the Parties:

The build-out schedule does not include contingencies for deployment of Utility personnel to assist in outage restoration efforts on the Utility's system or the systems of other utilities with whom the Utility has a mutual assistance agreement. Consequently, the Requested In-Service Date may be delayed to the extent outage restoration work interrupts the design, procurement and construction of the requested facilities.

	Milestone	Completion Date	Responsible Party
(1)	Payment totaling $2,300,550.00 which is ½ of estimated charges	January 29, 2019	Interconnection Customer
(2)	Determine Survey Quality Coordinates of the substation and Utility owned Switching Station	May 20, 2019	Interconnection Customer
(3)	Procurement of long lead time materials and any required easements or right-of-way obtained.	June 19, 2019	Utility and Interconnection Customer
(4)	Site of Utility Facilities cleared and graded in accordance with SCE&G Customer Substation Guideline	March 18, 2020	Interconnection Customer
(5)	Payment totaling $2,300,550.00 which is ½ of estimated charges	March 18, 2020	Interconnection Customer
(6)	Completion of Upgrades and Interconnection Facilities*	November 18, 2020	Utility and Interconnection Customer
(7)	Inspection and Testing*	December 4, 2020	Utility and Interconnection Customer
(8)	Interconnection Customer to remedy any items identified by Utility following completion of inspection and testing*	December 18, 2020	Interconnection Customer
(9)	Final inspection and approval for parallel operation*	January 5, 2021	Utility

***Milestone is contingent on the completion of the preceding milestones.**

Agreed to by:

For the Utility P. Xanthakos Date 11/13/18

Print Name: Pandelis N. Xanthakos

For the Interconnection Customer B A Beerley Date 11/12/18

Print Name: Brent Beerley

ELECTRONICALLY FILED - 2019 February 4 1:18 PM - SCGIP - Docket # 2019-305-E - Page 65 of 262

Additional Operating Requirements for the Utility's System and Affected Systems Needed to Support the Interconnection Customer's Needs

The Utility shall also provide requirements that must be met by the Interconnection Customer prior to initiating parallel operation with the Utility's System. The Interconnection Customer shall maintain compliance with all applicable Operating Requirements during parallel operation with the Utility's System.

1. The Interconnection Customer will be required to obtain an electrical certificate of release from the local inspection authority, provided that the local inspection authority exercises jurisdiction over the Facility, prior to an initial interconnection, which must be submitted to the Utility. Where the local inspection authority declines to exercise jurisdiction over the Facility, the Interconnection Customer must provide Utility a written letter in lieu of inspection executed by the Interconnection Customer and a Professional Engineer or electrical contractor, licensed in the State of South Carolina. The local authority inspection or letter in lieu of inspection must be presented to the Utility in advance of the Utility's inspection and testing of the Interconnection Facilities and Facility.

2. Utility intends to allow the Interconnection Customer to continue normal operation of the Facility when a Hot Line Tag is issued on any networked transmission line. When a Hot Line Tag is issued on a radial transmission line, Utility will require Interconnection Customer to disconnect the Facility from the Transmission System. Utility retains the right to implement special settings or relay logic at the interconnection device during Hot Line Tag conditions. Utility also retains the right to require the Interconnection Customer to disconnect the Facility from the Transmission System during Hot Line Tag conditions if Utility deems a special condition warrants such action.

3. Utility requires the Interconnection Customer to install a single lockable visible disconnecting means so that the Facility can be isolated from the Utility's System at anytime by Utility personnel if necessary. This device will be placed after the primary metering point, or at a different location specified by the Utility, as part of the Interconnection Customer's Interconnection Facilities. This disconnecting device must be visible, accessible, and operable by Utility personnel 24 hours a day, 7 days a week. All disconnecting devices controllable at the ground level shall have a locking mechanism to allow the Utility's employees to install a pad lock in the open position. The Interconnection Customer shall provide and maintain improved access, suitable for passenger vehicles and Utility service trucks, to the disconnecting device and the Utility's Interconnection Facilities. Any locked gates or other restrictions to access between public rights of way and the disconnecting device and the Utility's Interconnection Facilities will include, in the locking mechanism, an SCE&G lock. The SCE&G lock will be provided by the Utility and is operable by authorized Utility employees.

ELECTRONICALLY FILED - 2019 February 28 4:18 PM - SCPSC - Docket # 2019-305-E - Page 75 of 262

4. Utility will install at the Interconnection Customer's expense a disconnecting device as part of the Utility's Interconnection Facilities to allow for isolation of the Facility during emergency restoration situations. Utility retains the right to disconnect the Facility at anytime Utility deems it necessary to protect its Systems or for safety concerns. The Facility will be reconnected to Utility's Systems once the problem or issue has been corrected or repaired and Utility deems it safe to return to normal configuration.

5. Where Utility has installed and owns an interconnection protection device at the Point of Interconnection, the device will be set to operate with "one shot logic" in order to disconnect the Facility in the case of a fault detected on the generator side of the Point of Interconnection. The device will be set to trip in the case of voltage or frequency fluctuations detected on the Facility side of the device. These threshold settings will be determined and set by the Utility Relay Engineering Department. The Interconnection Facilities will be returned to normal operation upon confirmation by the Interconnection Customer that the fault has been located and either isolated or repaired. The Interconnection Customer will be required to contact Utility and ensure all personnel and equipment are fully prepared to safely reconnect the Generation Facility to the Utility's Systems prior to Utility's System Control sending a close signal to the device. Utility retains the right to dispatch Utility personnel to the Facility to inspect the repair or ensure all personnel are in a safe position prior to the protection device being closed.

6. It is the intent of Utility that the Interconnection Customer and Utility work to program relay settings to coordinate the Interconnection Facilities with the Utility's Systems. The coordination will employ a tiered approach such that the relay settings in the inverter units will be coordinated with the Utility protective device which in turn will be coordinated with the Utility's Systems. The Interconnection Customer's equipment will be responsible for protecting the Facility and inversely the Utility protective device will be responsible for protecting the Utility's Systems.

7. Based on Good Utility Practices the Facility will be required to come off line with any voltage or frequency fluctuations outside of the settings thresholds given to the Interconnection Customer by the Utility Relay Engineering Department. The Facility will remain off line until normal voltage and frequency on the Utility's System returns and maintains stability for a minimum of five minutes. This will serve to protect both Utility and the Facility equipment.

8. If a transfer trip scheme is required to be in place, the Interconnection Facilities protection device will disconnect the Facility upon operation of the distribution feeder breaker upon which it has been placed. After the feeder breaker has been re-energized by Utility's Distribution Dispatch Office or System Control the associated protection device will be placed back in the closed position and will reconnect the Facility.

ELECTRONICALLY FILED - 2019 February 4 1:18 PM IPNG SCP SDocket 2019-0015-E Page 5 of 6 262

9. The required relay settings for the Interconnection Facilities shall be set to match the set points and threshold schemes as determined by Utility's Relay Engineering Department and are project specific based on existing feeder settings and requirements. Utility retains the right to change the required settings of the Interconnection Facilities from time to time as system conditions warrant. In such case, the Utility will contact the Interconnection Customer, specifying the new setting requirements and the reasons for the necessary programming changes. The Interconnection Customer shall make every effort to complete the programming changes within five Business Days of being notified by Utility personnel.

10. For periodic testing by the Interconnection Customer, the Interconnection Customer shall provide the Utility with a minimum of five Business Days prior to the proposed testing date. Utility retains the right to require the Interconnection Customer to reschedule the testing if necessary. Utility will be allowed to be present and witness this testing at its own option. A copy of the testing results shall be provided to Utility upon completion.

11. The Interconnection Customer is obligated to obtain and/or sign any required rights of way or easements necessary to perform the interconnection with Utility's Systems. Any rights of way that have to be obtained from property owners other than the Interconnection Customer will be obtained and signed over to Utility as directed by Utility's Right of Way department.

12. The Interconnection Customer agrees to adhere to Utility's vegetation management guidelines for all construction and maintenance of Interconnection Facilities.

13. The Interconnection Customer agrees upon execution of this Generator Interconnection Agreement to maintain operation of its Facility so as to not adversely affect other Utility customers associated with the Utility's Systems. If adverse effects directly associated with the Facility become apparent the Interconnection Customer shall be responsible for correcting the situation. This will be accomplished either by additional operating constraints as determined by Utility and the Interconnection Customer, corrections to existing Facility equipment, the addition of new Interconnection Facilities, or system upgrades to the Utility's Systems. These corrective measures will be the financial responsibility of the Interconnection Customer and will be agreed upon in advance by the Interconnection Customer and Utility.

14. The Interconnection Customer will provide the Utility operational and forecast information consistent with Good Utility Practices. Such information will include, but is not limited to, maintenance schedules, availability updates (i.e., forced outages), and generation forecasts. The Parties will agree on frequency and timing of data submittals. Utility also anticipates that the data submittal requirements will change over time as dictated by industry needs and regulations.

ELECTRONICALLY FILED - 2019 February 18 3:57 PM - SCGIP - Docket 20-0413 - E - Page 5 of 6262

15. The Interconnection Customer will, whenever possible consistent with Good Utility Practice, not schedule major maintenance in the months of June, July, August or September.

16. The Interconnection Customer will abide by all applicable reliability standards established by the North American Electric Reliability Corporation ("NERC").

17. Failure of the Interconnection Customer to comply with all the provisions herein can result in Utility determining the possibility of adverse system effects and could result in the disconnection of the Facility from Utility's Systems.

18. The Interconnection Customer shall purchase irradiance meters to be installed by the Utility at the mini-swithcing station associated with the Facility. The Interconnection Customer shall grant the Utility access to data provided by the irradiance meters. Such data, as specified by the Utility, shall be supplied to the Utility by the 5th business day of each calendar month.

19. The grounding systems of the Generating Facility's substation and the Utility's switching station must be bonded if they share a common fenceline or if utilizing certain bus differential relay schemes. The Generating Facility is subject to the indemnification obligations provided in Article 7.3 for any such liability incurred to third parties in operating the Utility's circuit breaker. The Generating Facility must install its own circuit breaker as a component of its Interconnection Facilities.

20. Section 3.4 describes a number of conditions upon which the Utility may temporarily disconnect the Interconnection Customer's Generating Facility from the Utility's System. Section 3.4.6 provides that Utility may disconnect from the Utility's System any Generating Facility that is not in compliance with the Standard or Operating Requirements, including the Operating Requirements specified in this Appendix 5. Without limiting the scope of Section 3.4, the Utility may disconnect or curtail the output of the Generating Facility when continued operation of the Generating Facility may:

- require changes in the operation of hydroelectric resources located inside the Utility's Balancing Authority Area in a manner that could (i) constitute an Adverse Operating Effect, or (ii) result in the violation of Applicable Laws and Regulations, as such Applicable Laws and Regulations may be changed from time to time;
- require changes in the planned output of a nuclear fueled generating facility located inside the Utility's Balancing Authority Area, to the extent the planned output is required for (i) the safest operation of the nuclear fueled generating facility, or (ii) the reliable operation of the Bulk Electric System;
- interfere with Utility's ability to address system events that include load shed and black start;

ELECTRONICALLY FILED - 2019 February 4 1:18 PM - SCGIP - Docket 2019-05-E - Page 6 of 262

- interfere with Utility's ability to take actions needed to preserve the reliability of the Utility's System as well as the Bulk Electric System; or
- result in the violation of Applicable Laws and Regulations, including those issued by the ERO, as such Applicable Laws and Regulations may be changed from time to time.

The Utility provides the foregoing list for ease of reference for the Interconnection Customer; all such enumerated reasons have been and remain standard operating practice on the Utility's System. Due to the proliferation of variable renewable energy resources on the Utility's System at the time of the execution of this Agreement, the Generating Facility should expect to experience curtailment based on one or more of the above referenced conditions.

ELECTRONICALLY FILED - 2019 February 4 1:18 PM - SCGIP - Docket No. 2019-05-E - Page 6 of 6 of 262

Utility's Description of its Upgrades and Best Estimate of Upgrade Costs

The Utility shall describe Upgrades and provide an itemized best estimate of the cost, including overheads, of the Upgrades and annual operation and maintenance expenses associated with such Upgrades. The Utility shall functionalize Upgrade costs and annual expenses as either transmission or distribution related.

The Utility will own and install System Upgrades consisting of the modification of the relaying at the Wateree and Killian terminals. The estimated cost of these Upgrades is $20,000. This amount must be remitted by the Interconnection Customer to the Utility as specified in Appendix 4 - Milestones.

ELECTRONICALLY FILED - 2019 February 28 4:18 PM - SCPSC - Docket # 2019-305-E - Page 6 of 262