MFN AGREEMENT

This MFN Agreement ("MFN Agreement"), which shall be filed with and is subject to approval by the State Commission and shall become effective ten (10) days after approval by such Commission ("Effective Date"), is entered into by and between Capital Communications Consultants, Inc. ("CLEC"), a Georgia Corporation on behalf of itself, and BellSouth Telecommunications, LLC d/b/a AT&T ALABAMA, AT&T FLORIDA, AT&T GEORGIA, AT&T KENTUCKY, AT&T LOUISIANA, AT&T MISSISSIPPI, AT&T NORTH CAROLINA, AT&T SOUTH CAROLINA and AT&T TENNESSEE, ("AT&T"), having an office at 675 W. Peachtree Street, Atlanta, Georgia, 30375, on behalf of itself and its successors and assigns.

WHEREAS, the Telecommunications Act of 1996 (the "Act") was signed into law on February 8, 1996; and

WHEREAS, CLEC has requested that AT&T make available the Interconnection Agreement in its entirety executed between AT&T and Windstream NuVox, Inc. dated November 6, 2009 for the State(s) of South Carolina ("Interconnection Agreement").

WHEREAS, pursuant to Section 252(i) of the Act, for purposes of this MFN Agreement, CLEC has adopted the Interconnection Agreement for the State(s) of South Carolina;

NOW, THEREFORE, in consideration of the promises and mutual covenants of this MFN Agreement, CLEC and AT&T hereby agree as follows:

1. AT&T-9STATE shall be defined as the States of Alabama, Florida, Georgia, Kentucky, Louisiana, Mississippi, North Carolina, South Carolina and Tennessee.

2. CLEC and AT&T shall adopt in its entirety the Interconnection Agreement dated November 6, 2009 and any and all amendments to said Interconnection Agreement executed and approved by the appropriate state regulatory commission as of the date of the execution of this MFN Agreement. The Interconnection Agreement and all amendments are attached hereto as Exhibit 1 and incorporated herein by this reference. The adoption of this Interconnection Agreement with amendment(s) consists of the following:

ITEM
Adoption Papers
Signature Page
Exhibit 1 Cover Page
Windstream NuVox, Inc. Agreement
TRRO Settlement Amendment – Effective February 13, 2010
Negotiated Add USOC COS, Notice Contact Update and Name Change Amendment – Effective January 27, 2011

3. In the event that CLEC consists of two (2) or more separate entities as set forth in the preamble to this MFN Agreement, all such entities shall be jointly and severally liable for the obligations of CLEC under this MFN Agreement.

4. The term of this MFN Agreement shall be from the Effective Date as set forth above and shall expire as set forth in Section 2 of the General Terms and Conditions of the Interconnection Agreement. For the purposes of determining the expiration date of this MFN Agreement, the expiration date shall be May 17, 2013.

5. In the event that a voluntary or involuntary petition has been or is in the future filed by or against CLEC under bankruptcy or insolvency laws, or any law relating to the relief of debtors, readjustment of indebtedness, debtor reorganization or composition or extension of debt (any such proceeding shall be known as an "Insolvency Proceeding"), then: (a) all rights of AT&T under such laws, including, without limitation, all rights of AT&T under 11 U.S.C. § 366, shall be preserved, and CLEC's adoption of this MFN Agreement shall in no way impair such rights of AT&T; and (b) all rights of CLEC resulting from CLEC's adoption of this MFN Agreement shall be subject to and modified by any Stipulations and Orders entered in the Insolvency Proceeding, including, without limitation, any Stipulation or Order providing adequate assurance of payment to AT&T pursuant to 11 U.S.C. § 366. All monetary obligations of the parties to one another under CLEC's prior agreement shall remain in full force and effect and shall constitute monetary obligations of the parties under this MFN Agreement. In the event

that this MFN Agreement is assumed pursuant to 11 U.S.C. § 365 or any other similar law in an Insolvency Proceeding, such monetary obligations shall be cured as part of such assumption.

6. In entering into this MFN Agreement, the Parties acknowledge and agree that neither Party waives, and each Party expressly reserves, any of its rights, remedies or arguments it may have at law or under the intervening law or regulatory change provisions in this MFN Agreement with respect to any orders, decisions, legislation or proceedings and any remands by the FCC, state utility commission, court, legislature or other governmental body including, without limitation, any such orders, decisions, legislation, proceedings, and remands which were issued, released or became effective prior to the Effective Date of this MFN Agreement, or which the Parties have not yet fully incorporated into this Agreement or which may be the subject of further government review.

7. Every notice, consent or approval of a legal nature, required or permitted by this MFN Agreement shall be in writing and shall be delivered either by hand, by overnight courier or by US mail postage prepaid addressed to:

To AT&T:

Contract Management
ATTN: Notices Manager
311 S. Akard, 9th Floor
Dallas, TX 75202-5398
Facsimile Number: (214) 464-2006

To CLEC:

Teresa Michael
7470 Bartlett Corporate Cove West, Suite 102
Bartlett, Tennessee 38133
Facsimile Number: (855) 233-1338

or at such other address as the intended recipient previously shall have designated by written notice to the other Party. Where specifically required, notices shall be by certified or registered mail. Unless otherwise provided in this MFN Agreement, notice by mail shall be effective on the date it is officially recorded as delivered by return receipt or equivalent, and in the absence of such record of delivery, it shall be presumed to have been delivered the fifth day, or next business day after the fifth day, after it was deposited in the mails.

Capital Communications Consultants, Inc.

By: Min-Su Kang

Name: Min-Su Kang

Title: President

Date: 11-16-12

BellSouth Telecommunications, LLC d/b/a AT&T SOUTH CAROLINA by AT&T Services, Inc., its authorized agent

By: Pat Doherty

Name: Patrick Doherty

Title: Director - Regulatory

Date: 11-26-12

State	Resale OCN
SOUTH CAROLINA	376G

Description	ACNA Code(s)
ACNA(s)	YCL

CN:10162012-226

EXHIBIT 1

AT&T Wholesale Agreement

Contract Number: 10292

TABLE OF CONTENTS

General Terms and Conditions

1. Definitions
2. CLEC Certification
3. Term of the Agreement
4. Termination
5. Operational Support Systems
6. Parity
7. White Pages Directory Listings Requirements
8. Local Dialing Parity .
9. Court Ordered Requests for Call Detail Records and Other Subscriber Information
10. Liability and Indemnification
11. Intellectual Property Rights and Indemnification
12. Proprietary and Confidential Information
13. Resolution of Disputes
14. Taxes
15. Network Maintenance and Management
16. Force Majeure
17. Modification of Agreement
18. Non-Waiver of Legal Rights
19. One Agreement
20. Severability
21. No Waiver
22. Governing Law
23. Assignments
24. Notices
25. Rule of Construction
26. Headings of No Force or Effect
27. Cooperation in Preventing Customer Fraud
28. Revenue Protection
29. Law Enforcement Interface
30. Multiple Counterparts
31. Filing of Agreement

32. Compliance with Applicable Law
33. Necessary Approvals
34. Good Faith Performance
35. Independent Contracting Parties
36. Subcontracting
37. Labor Relations
38. Compliance with the Communications Assistance for Law Enforcement Act of 1994 ("CALEA")
39. Customer Inquiries
40. Additional Fair Competition Requirements
41. Posting of Agreements
42. Nonexclusive Dealings
43. Rate True-Up
44. Survival
45. Entire Agreement

Attachment 1 - Resale

Attachment 2 - Network Elements and Other Services

Attachment 3 - Network Interconnection

Attachment 4 - Collocation

Attachment 5 - Access to Numbers and Number Portability

Attachment 6 - Pre-Ordering, Ordering, Provisioning, Maintenance and Repair

Attachment 7 - Billing

Attachment 8 - Rights-of-Way, Conduits and Pole Attachments

Attachment 9 - Performance Measurements and Associated Remedies

Attachment 10 – AT&T Disaster Recovery Plan

Attachment 11 - Bona Fide Request and New Business Request Process

SE Region Pricing Schedule

AGREEMENT
GENERAL TERMS AND CONDITIONS

THIS agreement (Agreement) is made by and between BellSouth Telecommunications, Inc. d/b/a AT&T South Carolina, ("AT&T"), a Georgia corporation, and NuVox Communications, Inc. d/b/a NuVox ("NuVox"), a Delaware corporation, and shall be effective on the Effective Date, as defined herein. This Agreement may refer to either AT&T or NuVox or both as a "Party" or "Parties."

W I T N E S S E T H

WHEREAS, AT&T is an incumbent local exchange telecommunications company authorized to provide telecommunications services in the states of Alabama, Florida, Georgia, Kentucky, Louisiana, Mississippi, North Carolina, South Carolina and Tennessee; and

WHEREAS, NuVox is or seeks to become a CLEC authorized to provide telecommunications services in the states of Alabama, Florida, Georgia, Kentucky, Louisiana, Mississippi, North Carolina, South Carolina, and Tennessee; and

WHEREAS, NuVox wishes to resell AT&T's telecommunications services and purchase network elements and other services, and, primarily in connection therewith, may wish to utilize collocation space as set forth in Attachment 4 of this Agreement); and

WHEREAS, the Parties wish to interconnect their facilities and exchange traffic pursuant to and consistent with the rights and obligations set forth in Sections 251 and 252 of the Act.

NOW THEREFORE, in consideration of the mutual agreements contained herein, AT&T and NuVox agree as follows:

1. **Definitions**

1.1 The definitions set forth in this Section apply to the Agreement as a whole and both Parties' conduct thereunder. Additional definitions are included in the various attachments to this Agreement. Unless the context clearly indicates otherwise, any term defined or used in the singular shall include the plural.

1.2 **Affiliate** is defined as a person that (directly or indirectly) owns or controls, is owned or controlled by, or is under common ownership or control with, another person. For purposes of this paragraph, the term "own" means to own an equity interest (or equivalent thereof) of more than ten (10) percent.

1.3 **Commission** is defined as the appropriate regulatory agency in each state of AT&T's nine-state region (Alabama, Florida, Georgia, Kentucky, Louisiana, Mississippi, North Carolina, South Carolina, and Tennessee).

1.4 **Competitive Local Exchange Carrier (CLEC)** means a telephone company certified by the Commission to provide local exchange service within AT&T's franchised area.

1.5 **Day** is defined to mean calendar day, unless otherwise expressly noted.

1.6 **Effective Date** is defined as the date that the Agreement is effective which shall be ten (10) calendar days after the date of the last signature executing the Agreement. Upon request by NuVox for a future amendment to incorporate Commission ordered rates, at NuVox's request AT&T shall only propose an amendment with language and rates that are necessary in order to implement such order. Such amendment shall be effective ten (10) calendar days after the date of the last signature executing the amendment or as otherwise ordered in a FCC or Commission order or rule. Non rate impacting future amendments will be effective as of the date of the last signature executing the amendment or as otherwise ordered in a FCC or Commission order or rule. The Parties agree that such signature shall not be unreasonably delayed.

1.7 **FCC** means the Federal Communications Commission.

1.8 **General Terms and Conditions** means this document including all of the terms, provisions and conditions set forth herein.

1.9 **National Holiday** means New Year's Day, Martin Luther King Jr. Day, President's Day/Washington's Birthday, Memorial Day, Independence Day, Labor Day, Columbus Day, Veterans' Day, Thanksgiving Day, Christmas Day. In the calculation of intervals of less than ten (10) calendar days national holidays will be excluded.

1.10 **Project Management** means the AT&T Professional Services organization.

1.11 **Telecommunications** means the transmission, between or among points specified by the user, of information of the user's choosing, without change in the form or content of the information as sent and received.

1.12 **Telecommunications Service** means the offering of telecommunications for a fee directly to the public, or to such classes of users as to be effectively available directly to the public, regardless of the facilities used.

1.13 **Telecommunications Act of 1996 ("**1996 Act**")** means Public Law 104-104 of the United States Congress effective February 8, 1996. The 1996 Act is part of the Communications Act of 1934 (47 U.S.C. Section 1 et. seq.) as amended ("the Act").

1.14 The use of the term "end user" or "customer" throughout this Agreement shall not be construed to expand, restrict or eliminate any rights or obligations of the Parties.

2. **CLEC Certification**

2.1 Prior to execution of this Agreement, AT&T may request and NuVox agrees to provide AT&T in writing NuVox's CLEC certification for all states covered by this Agreement except Kentucky. AT&T will file this Agreement with the appropriate Commission for approval.

2.2 To the extent NuVox is not certified as a CLEC in each state covered by this Agreement as of the execution hereof, NuVox will notify AT&T in writing and provide CLEC certification when it becomes certified to operate in any other state covered by this Agreement. Upon notification, AT&T will file this Agreement with the appropriate Commission for approval.

3. **Term of the Agreement**

3.1 The term of this Agreement shall be three and one half (3 ½) years, beginning on the Effective Date and shall apply to the AT&T territory in the state of South Carolina. Notwithstanding any prior agreement of the Parties, the rates, terms and conditions of this Agreement shall not be applied retroactively prior to the Effective Date.

3.2 The Parties agree that by no earlier than two hundred seventy (270) calendar days and no later than one hundred and eighty (180) calendar days prior to the expiration of this Agreement, they shall commence negotiations for a new agreement for a new agreement to be effective beginning on the expiration date of this Agreement ("Subsequent Agreement").

3.3 If, within one hundred and thirty-five (135) calendar days of the designated start date of the negotiation referred to in Section 3.2, above, the Parties are unable to satisfactorily negotiate new terms, conditions and prices for a Subsequent Agreement, either Party may petition the Commission to establish appropriate terms, conditions and prices pursuant to 47 U.S.C. 252. The Parties agree that, in such event, they shall encourage the Commission to issue its order regarding the Subsequent Agreement no later than the expiration date of this Agreement. The Parties further agree that in the event the Commission does not issue its Arbitration order prior to the expiration date of this Agreement, or if the Parties continue beyond the expiration date of this Agreement to negotiate the Subsequent Agreement, the Subsequent Agreement ultimately ordered by the Commission, or negotiated by the Parties, will be effective upon the effective date set forth in the Subsequent Agreement.

3.4 Notwithstanding the foregoing and except as set forth in Section 3.4.1 below, in the event that, as of the date of the expiration of this Agreement and conversion of this Agreement to a month-to-month term, the Parties have not entered into a Subsequent Agreement and no arbitration proceeding has been filed in accordance with Section 252 of the Act, then either Party may terminate this Agreement upon sixty (60) calendar days notice to the other Party. In the event that AT&T

terminates this Agreement as provided above, AT&T shall continue to offer services to NuVox pursuant to AT&T's then current standard interconnection agreement or NuVox may exercise its rights under Section 252(i) of the Act. In the event that AT&T's standard interconnection agreement becomes effective as between the Parties or NuVox adopts another agreement, the Parties may continue to negotiate a Subsequent Agreement, and the terms of such Subsequent Agreement shall be effective as of the effective date stated in such Subsequent Agreement.

3.4.1 If an arbitration proceeding has been filed in accordance with Section 252 of the Act and if the Commission does not issue its order prior to the expiration of this Agreement, this Agreement shall be deemed extended on a month-to-month basis until the Subsequent Agreement becomes effective. The terms of such Subsequent Agreement shall be effective as of the effective date stated in such Subsequent Agreement and shall not be applied retroactively to the expiration date of this Agreement unless the Parties agree otherwise. Neither Party shall refuse to provide services to the other Party during the negotiation of the Subsequent Agreement or the transition from this Agreement to the Subsequent Agreement.

4. **Termination**

4.1 NuVox may terminate any network element, interconnection or other services provided under this Agreement upon thirty (30) calendar days written notice to AT&T. In such cases, NuVox's obligation to pay for such network element, interconnection or other services shall be limited to the amounts due provided up to and including the date of termination.

4.2 Upon notice of termination, the Parties agree to cooperate in an orderly and efficient transition to NuVox or another vendor and to exercise their best efforts to effect an orderly and efficient transition.

5. **Operational Support Systems**

5.1 NuVox shall pay charges for Operational Support Systems (OSS) as set forth in this Agreement in Attachment 1 and/or in Attachments 2, 3 and 5, as applicable.

6. **Parity**

6.1 When NuVox purchases services from AT&T pursuant to Attachment 1 of this Agreement for the purposes of Resale to its customers, such services shall be at least equal in quality, subject to the same conditions, and provided within the same provisioning time intervals that AT&T provides to its Affiliates, subsidiaries and customers. To the extent technically feasible, the quality of a Network Element, as well as the quality of the access to such Network Element provided by AT&T to NuVox shall be at least equal in quality to that which AT&T provides to itself, its Affiliates or any other Telecommunications carrier. The quality of the interconnection between the network of AT&T and the network of NuVox shall be at a level that is at least equal to that which AT&T provides

itself, a subsidiary, an Affiliate, or any other party. The interconnection facilities shall be designed to meet the same technical criteria and service standards that are used within AT&T's network and shall extend to a consideration of service quality as perceived by AT&T's customers and service quality as perceived by NuVox and its customers.

7. **White Pages Directory Listings Requirements**

7.1 Listings. NuVox shall provide all new, changed and deleted listings on a timely basis and AT&T or its agent will include NuVox residential and business customer listings in the appropriate White Pages (residential and business) or alphabetical directories in the geographic areas covered by this Interconnection Agreement in a nondiscrimatory manner and at parity. Directory listings will make no distinction between NuVox and AT&T subscribers.

7.1.1 Rates. So long as NuVox provides subscriber listing information (SLI) to AT&T in accordance with Section 7.2 below, AT&T shall provide to NuVox one (1) primary White Pages listing per NuVox subscriber at no charge for the initial listing. Additions or changes to the initial subscriber White Pages listing shall incur a secondary service charge in accordance with Section A4.2 of AT&T's GSST.

7.2 Procedures for Submitting NuVox SLI are found in The AT&T Business Rules for Local Ordering located at the AT&T CLEC Online website (https://clec.att.com/clec/).

7.2.1 NuVox authorizes AT&T to release all NuVox SLI provided to AT&T by NuVox to qualifying third parties via either license agreement or AT&T's Directory Publishers Database Service (DPDS), GSST, Section A38.2, as the same may be amended from time to time. Such NuVox SLI shall be intermingled with AT&T's own customer listings and listings of any other CLEC that has authorized a similar release of SLI.

7.2.2 No compensation shall be paid to NuVox for AT&T's receipt of NuVox SLI, or for the subsequent release to third parties of such SLI. In addition, to the extent AT&T incurs costs to modify its systems to enable the release of NuVox's SLI, or costs on an ongoing basis to administer the release of NuVox's SLI, NuVox shall pay to AT&T its proportionate share of the reasonable costs associated therewith. At any time that costs may be incurred to administer the release of NuVox's SLI, NuVox will be notified. If NuVox does not wish to pay its proportionate share of these reasonable costs, NuVox may instruct AT&T that it does not wish to release its SLI to independent publishers, and NuVox shall amend this Agreement accordingly. NuVox will be liable for all costs incurred until the effective date of the amendment.

7.2.3 Neither AT&T nor any agent shall be liable for the content or accuracy of any SLI provided by NuVox under this Agreement. Except to the extent caused by

gross negligence or willfull misconduct by AT&T, NuVox shall indemnify, hold harmless and defend AT&T and its agents from and against any damages, losses, liabilities, demands, claims, suits, judgments, costs and expenses (including but not limited to reasonable attorneys' fees and expenses) arising from AT&T's tariff obligations or otherwise and resulting from or arising out of any third party's claim of inaccurate NuVox listings or use of the SLI provided pursuant to this Agreement. AT&T may forward to NuVox any complaints received by AT&T relating to the accuracy or quality of NuVox listings.

7.2.4 AT&T agrees to address any issue regarding a directory listing raised by a NuVox customer in the same manner that AT&T does for AT&T's customers.

7.2.5 Listings and subsequent updates will be released consistent with AT&T system changes and/or update scheduling requirements.

7.3 Unlisted/Non-Published Subscribers. NuVox will be required to provide to AT&T the names, addresses and telephone numbers of all NuVox customers who wish to be omitted from directories.

7.4 Inclusion of NuVox Customers in Directory Assistance Database. AT&T will include and maintain NuVox subscriber listings in AT&T's Directory Assistance databases at no recurring charge and NuVox shall provide such Directory Assistance listings to AT&T at no recurring charge.

7.5 Listing Information Confidentiality. AT&T will afford NuVox's directory listing information the same level of confidentiality that AT&T affords its own directory listing information.

7.6 Additional, Designer, Non-Listed and Non-Published Listings. AT&T shall provide Additional, Designer, Non-Listed and Non-Published White Pages Listings to NuVox's customers under the same rates, terms and conditions as AT&T makes such listings available to its own customers. Where AT&T charges its customers for Additional, Designer, Non-Listed and Non-Published White Pages Listings, AT&T shall publish such listings under the same rates, terms and conditions to NuVox for its Resale customers subject to the applicable wholesale rates in Attachment 1.

7.7 Directories. AT&T or its agent shall make available White Pages directories to NuVox subscribers at no charge or as specified in a separate agreement with AT&T's agent.

7.7.1 Delivery. AT&T or its agent shall deliver White Pages directories to NuVox customers at parity with AT&T's delivery of directories to its own customers.

8. **Local Dialing Parity**

8.1 AT&T shall provide local dialing parity as described in the Act and required by FCC rules, regulations and policies. NuVox customers shall not have to dial any greater number of digits than AT&T customers to complete the same call. In addition, NuVox customers shall experience at least the same service quality as AT&T customers in terms of post-dial delay, call completion rate and transmission quality.

9. **Court Ordered Requests for Call Detail Records and Other Subscriber Information**

9.1 Subpoenas Directed to AT&T. Where AT&T provides resold services or local switching for NuVox, AT&T shall respond to subpoenas and court ordered requests delivered directly to AT&T for the purpose of providing call detail records when the targeted telephone numbers belong to NuVox customers. Billing for such requests will be generated by AT&T and directed to the law enforcement agency initiating the request. AT&T shall maintain such information for NuVox customers for the same length of time it maintains such information for its own customers.

9.2 Subpoenas Directed to NuVox. Where AT&T is providing to NuVox Telecommunications Services for resale or providing to NuVox the local switching function, then NuVox agrees that in those cases where NuVox receives subpoenas or court ordered requests regarding targeted telephone numbers belonging to NuVox customers, and where NuVox does not have the requested information, NuVox will advise the law enforcement agency initiating the request to redirect the subpoena or court ordered request to AT&T for handling in accordance with 9.1 above.

9.3 In all other instances, where either Party receives a request for information involving the other Party's customer, the Party receiving the request will advise the law enforcement agency initiating the request to redirect such request to the other Party.

10. **Liability and Indemnification**

10.1 NuVox Liability. In the event that NuVox consists of two (2) or more separate entities as set forth in this Agreement and/or any Amendments hereto, all such entities that are Parties to this Agreement shall be jointly and severally liable for the obligations of NuVox under this Agreement.

10.2 The Parties have negotiated specific provisions in Section 10 of Attachment 3 and Section 5 of Attachment 7 to which the provisions of the following sentence shall not apply. For all other matters, AT&T shall take financial responsibility for its own actions in causing or contributing to unbillable or uncollectible, NuVox revenue.

10.3 Liability for Acts or Omissions of Third Parties. The Parties shall not be liable to each other for any act or omission of another Telecommunications company.

10.4 Limitation of Liability

10.4.1 Except for any indemnification obligations of the Parties hereunder, and except in cases of the provisioning Party's gross negligence or willful misconduct, each Party's liability to the other for any loss, cost, claim, injury, liability or expense, including reasonable attorneys' fees relating to or arising out of any negligent act or omission in its performance of this Agreement, whether in contract or in tort, shall be limited to a credit for the actual cost of the services or functions not performed or improperly performed.

10.4.2 Limitations in Tariffs. A Party may, in its sole discretion, provide in its tariffs and contracts with its customers and third parties that relate to any service, product or function provided or contemplated under this Agreement, that to the maximum extent permitted by Applicable Law, such Party shall not be liable to the customer or third party for (i) any loss relating to or arising out of this Agreement, whether in contract, tort or otherwise, that exceeds the amount such Party would have charged that applicable person for the service, product or function that gave rise to such loss and (ii) consequential damages. To the extent that a Party elects not to place in its tariffs or contracts such limitations of liability, and the other Party incurs a loss as a result thereof, such Party shall indemnify and reimburse the other Party for that portion of the loss that would have been limited had the first Party included in its tariffs and contracts the limitations of liability that such other Party included in its own tariffs at the time of such loss.

10.4.3 Neither AT&T nor NuVox shall be liable for physical damage to the other Party's premises, facilities and equipment or customer premises resulting from the furnishing of a service, including, but not limited to, the installation and removal of equipment or associated wiring, except to the extent caused by a Party's negligence, gross negligence or willful misconduct or by a Party's failure to ground properly a local loop after disconnection.

10.4.4 Nothing in this Section 10 shall limit a Party's obligation to indemnify or hold harmless the other Party set forth elsewhere in this Agreement. Except in cases of gross negligence or willful or intentional misconduct, under no circumstance shall a Party be responsible or liable for indirect, incidental, or consequential damages. In connection with this limitation of liability, each Party recognizes that the other Party may, from time to time, provide advice, make recommendations, or supply other analyses related to the services or facilities described in this Agreement, and, while each Party shall use diligent efforts in this regard, the Parties acknowledge and agree that this limitation of liability shall apply to provision of such advice, recommendations, and analyses.

10.4.5 To the extent any specific provision of this Agreement purports to impose liability, or limitation of liability, on either Party different from or in conflict with the liability or limitation of liability set forth in this Section, then with respect to

the particular facts or circumstances covered by the more specific provision, the liability or limitation of liability contained in such specific provision shall apply. Nothing in this Section shall be interpreted to limit NuVox's rights to remedies and/or claims provided or contemplated elsewhere in this Agreement.

10.5 Indemnification for Certain Claims. The Party providing services hereunder, its Affiliates and its parent company, shall be indemnified, defended and held harmless by the Party receiving services hereunder against any claim, loss or damage to the extent arising from (1) the receiving Party's failure to abide by Applicable Law, (2) injuries or damages arising out of or in connection with this Agreement suffered by the customer to the extent caused by the receiving Party's negligence, gross negligence or willful misconduct or (3) any claim for libel, slander or invasion of privacy arising from the content of the receiving Party's own communications. The Party receiving services hereunder, its Affiliates and its parent company, shall be indemnified, defended and held harmless by the Party providing services hereunder against any claim, loss or damage to the extent arising from (1) the providing Party's failure to abide by Applicable Law, (2) injuries or damages arising out of or in connection with this Agreement suffered by the customer to the extent caused by the providing Party's negligence, gross negligence or willful misconduct or (3) any claim for libel, slander or invasion of privacy arising from the content of the receiving Party's own communications**.**

10.5.1 Promptly after receipt of notice of the commencement of, or of any definite and colorable written claim or written threat as to the commencement of any action or proceeding relating to a matter or matters for which a Party may seek indemnification pursuant to this Section 10.5.1, such Party (the "Indemnified Party") shall promptly give written notice to the other Party (the "Indemnifying Party") of the action or proceeding so commenced (or claimed or threatened for commencement as aforesaid), whereupon the Indemnifying Party shall, be obligated (unless the Indemnified Party shall have otherwise waived such obligation in its sole and absolute discretion by its written election to maintain its own defense, subject, in such event and in all respects, to the exemptions from and limitations applicable to the Indemnifying Party's liability as provided in the final sentence of this Section 10.5.1) to assume the defense thereof at its sole cost and expense using counsel selected by the Indemnifying Party and reasonably acceptable to the Indemnified Party in its reasonable and good faith business judgment; provided that, the Parties hereby acknowledge and agree that the failure by an Indemnified Party to notify the Indemnifying Party as to a claim or the commencement (or written claim or threat of commencement) of any action or proceeding as aforesaid shall not relieve the Indemnifying Party of any liability it may have to the Indemnified Party with respect thereto, except and to the extent that the Indemnifying Party shall have actually and demonstrably incurred material prejudice, or suffered forfeiture of material substantive defenses or claims, resulting directly and exclusively from the failure to so notify. From and after assumption by an Indemnifying Party of the defense of any such pending (or claimed or threatened, as above) claim, action or proceeding, the Indemnified

Party shall cooperate in a good faith and commercially-reasonable manner with the Indemnifying Party's reasonable requests for assistance or information relating to such action or proceeding, at the Indemnifying Party's sole cost and expense. The Indemnified Party shall retain the right to participate in the investigation and defense of such action or proceeding, with separate counsel chosen and paid for by the Indemnified Party. Unless the Indemnified Party shall have elected in its sole and absolute discretion to waive any further right to be indemnified with respect to any such action, proceeding or claim the Indemnified Party's counsel shall not unreasonably interfere with the defense by the Indemnifying Party and its counsel, and, absent a good faith and commercially reasonable basis therefore, as communicated in writing to the Indemnifying Party in reasonable detail, the Indemnified Party's counsel shall not raise any claims, defenses, or objections or otherwise take a course of action in representation of the Indemnified Party when such course of action would unreasonably conflict with a course of action or inaction chosen by the Indemnifying Party. An Indemnifying Party shall not be liable under this Section 10.5.1 for settlements or compromises by the Indemnified Party of any claim, action or proceeding commenced (or claimed or threatened for commencement as aforesaid) as described in this Section 10.5.1 unless the Indemnifying Party shall have previously consented in writing thereto (such consent not to be unreasonably withheld, conditioned or delayed) or unless the Indemnifying Party has been given notice and reasonable opportunity to defend such claim, action or proceeding and has failed to promptly undertake the defense.

10.6 Disclaimer. EXCEPT AS SPECIFICALLY PROVIDED TO THE CONTRARY IN THIS AGREEMENT INCLUDING ALL ATTACHMENTS AND EXHIBITS HERETO AND ANY APPLICABLE SERVICE QUALITY STANDARDS, MEASURES, ASSURANCES AND ASSOCIATED REMEDIES ORDERED BY THE FCC OR COMMISSION, NEITHER PARTY MAKES ANY REPRESENTATIONS OR WARRANTIES TO THE OTHER PARTY CONCERNING THE SPECIFIC QUALITY OF ANY SERVICES, OR FACILITIES PROVIDED UNDER THIS AGREEMENT. THE PARTIES DISCLAIM, WITHOUT LIMITATION, ANY WARRANTY OR GUARANTEE OF MERCHANTABILITY OR FITNESS FOR A PARTICULAR PURPOSE, ARISING FROM COURSE OF PERFORMANCE, COURSE OF DEALING, OR FROM USAGES OF TRADE.

11. Intellectual Property Rights and Indemnification

11.1 No License. No patent, copyright, trademark or other proprietary right is licensed, granted or otherwise transferred by this Agreement. A Party's use of the other Party's name, service marks and trademarks shall be in accordance with Applicable Law.

11.2 Ownership of Intellectual Property. Any intellectual property that originates from or is developed by a Party shall remain the exclusive property of that Party.

Except for a limited, non-assignable, non-exclusive, non-transferable license to use patents or copyrights to the extent necessary for the Parties to use any facilities or equipment (including software) or to receive any service solely as provided under this Agreement, no license in patent, copyright, trademark or trade secret, or other proprietary or intellectual property right, now or hereafter owned, controlled or licensable by a Party, is granted to the other Party. Neither shall it be implied nor arise by estoppel. Any trademark, copyright or other proprietary notices appearing on software or documents provided by one Party to the other Party for the receiving Party's internal use, shall not be removed provided that such notices are neither visible to nor detectable by the receiving Party's customers. It is the responsibility of each Party to ensure at no additional cost to the other Party that it has obtained any necessary licenses in relation to intellectual property of third Parties used in its network that may be required to enable the other Party to use any facilities or equipment (including software), to receive any service, or to perform its respective obligations under this Agreement.

11.3 Indemnification. The Party providing a service pursuant to this Agreement will defend the Party receiving such service or data provided as a result of such service against claims of infringement arising solely from the use by the receiving Party of such service in the manner contemplated under this Agreement and will indemnify and hold harmless the receiving Party from and against any loss, cost, expense or liability associated with claims.

11.4 Claim of Infringement. In the event that use of any facilities or equipment (including software), becomes, or in the reasonable judgment of the Party who owns the affected network is likely to become, the subject of a claim, action, suit, or proceeding based on intellectual property infringement, then said Party shall promptly and at its sole expense:

11.4.1 modify or replace the applicable facilities or equipment (including software) while maintaining form and function, or

11.4.2 obtain a license sufficient to allow such use to continue, or

11.4.3 in the event that the actions contemplated by Section 11.4.1 or 11.4.2 are commercially unreasonable, then said Party may terminate, upon reasonable notice, this contract with respect to use of, or services provided through use of, the affected facilities or equipment (including software), but solely to the extent required to avoid the infringement claim.

11.4.4 Neither Party's obligations under this Section shall apply to the extent the infringement is caused by: (i) modification of the facilities or equipment (including software) by the indemnitee; (ii) use by the indemnitee of the facilities or equipment (including software) in combination with equipment or facilities (including software) not provided or authorized by the indemnitor, provided the facilities or equipment (including software) would not be infringing if used alone;

(iii) conformance to specifications of the indemnitee which would necessarily result in infringement; or (iv) continued use by the indemnitee of the affected facilities or equipment (including software) after being placed on notice to discontinue use as set forth herein.

11.4.5 The foregoing shall constitute the Parties' sole and exclusive remedies and obligations with respect to a third party claim of intellectual property infringement arising out of the conduct of business under this Agreement.

11.5 Dispute Resolution. Any claim arising under this Section shall be excluded from the dispute resolution procedures set forth in Section 13 below and shall be brought in a court of competent jurisdiction.

12. **Proprietary and Confidential Information**

12.1 Proprietary and Confidential Information. It may be necessary for AT&T and NuVox, each as the "Discloser," to provide to the other Party, as "Recipient," certain proprietary and confidential information (including trade secret information) including but not limited to technical, financial, marketing, staffing and business plans and information, strategic information, proposals, request for proposals, specifications, drawings, maps, prices, costs, costing methodologies, procedures, processes, business systems, software programs, techniques, customer account data, call detail records and like information (collectively the "Information"). All such Information conveyed in writing or other tangible form shall be clearly marked with a confidential or proprietary legend. Information conveyed orally by the Discloser to Recipient shall be designated as proprietary and confidential at the time of such oral conveyance, shall be reduced to writing by the Discloser within forty-five (45) calendar days thereafter, and shall be clearly marked with a confidential or proprietary legend.

12.1.1 Each Party shall have the right to correct an inadvertent failure to identify information as Confidential Information by giving written notification within forty-five (45) calendar days after the information is disclosed. The Recipient shall, from that time forward, treat such information as Confidential Information subject to the provisions of this Section 12.

12.2 Use and Protection of Information. Recipient agrees to protect such Information of the Discloser provided to Recipient from whatever source from distribution, disclosure or dissemination to anyone except employees of Recipient with a need to know such Information solely in conjunction with Recipient's analysis of the Information and for no other purpose except as authorized herein or as otherwise authorized in writing by the Discloser. Recipient will not make any of any kind of the Information inspected by it. The Recipient will use the same standard of care to protect Information received as they would use to protect their own confidential and proprietary Information. Upon request the Information will be

returned by the Recipient to the Discloser within thirty (30) calendar days of completion of any use.

12.3 Exceptions. Recipient will not have an obligation to protect any portion of the Information which:

12.3.1 (a) is made publicly available by the Discloser or lawfully by a nonparty to this Agreement; (b) is lawfully obtained by Recipient from any source other than Discloser; (c) is previously known to Recipient without an obligation to keep it confidential; or (d) is released from the terms of this Agreement by Discloser upon written notice to Recipient.

12.4 Recipient agrees to use the Information solely for the purposes of negotiations pursuant to 47 U.S.C. 251 or in performing its obligations under this Agreement and for no other entity or purpose, except as may be otherwise agreed to in writing by the Parties. Nothing herein shall prohibit Recipient from providing information requested by the FCC or a state regulatory agency with jurisdiction over this matter, or to support a request for arbitration or an allegation of failure to negotiate in good faith.

12.5 Recipient agrees not to publish or use the Information for any advertising, sales or marketing promotions, press releases, or publicity matters that refer either directly or indirectly to the Information or to the Discloser or any of its affiliated companies.

12.6 The disclosure of Information neither grants nor implies any license to the Recipient under any trademark, patent, copyright, application or other intellectual property right that is now or may hereafter be owned by the Discloser.

12.7 Survival of Confidentiality Obligations. The Parties' rights and obligations under this Section 12 shall survive and continue in effect until two (2) years after the expiration or termination date of this Agreement with regard to all Information exchanged during the term of this Agreement. Thereafter, the Parties' rights and obligations hereunder survive and continue in effect with respect to any Information that is a trade secret under applicable law.

13. **Resolution of Disputes**

13.1 Except for procedures that outline the resolution of billing disputes which are set forth in Section 2 of Attachment 7 or as otherwise set forth in this Agreement, each Party agrees to notify the other Party in writing of a dispute concerning this Agreement. If the Parties are unable to resolve the issues relating to the dispute in the normal course of business then either Party shall file a complaint with the Commission to resolve such issues or, as explicitly otherwise provided for in this Agreement, may proceed with any other remedy pursuant to law or equity as provided for in this Section 13.

13.2 Except as otherwise stated in this Agreement, or for such matters which lie outside the jurisdiction or expertise of the Commission or FCC, if any dispute arises as to the enforcement of terms and conditions of this Agreement, and/or as to the interpretation of any provision of this Agreement, the aggrieved Party, to the extent seeking resolution of such dispute, must seek such resolution before the Commission or the FCC in accordance with the Act. Each Party reserves any rights it may have to seek judicial review of any ruling made by the Commission concerning this Agreement. Either Party may seek expedited resolution by the Commission. Until the dispute is finally resolved, each Party shall continue to perform its obligations under this Agreement**,** unless the issue as to how or whether there is an obligation to perform is the basis of the dispute, and shall continue to provide all services and payments as prior to the dispute provided however, that neither Party shall be required to act in any unlawful fashion**.**

13.3 Except to the extent the Commission is authorized to grant temporary equitable relief with respect to a dispute arising as to the enforcement of terms and conditions of this Agreement, and/or as to the interpretation of any provision of this Agreement, this Section 13 shall not prevent either Party from seeking any temporary equitable relief, including a temporary restraining order, in a court of competent jurisdiction.

13.4 In addition to Sections 13.1 and 13.2 above, each Party shall have the right to seek legal and equitable remedies on any and all legal and equitable theories in any court of competent jurisdiction for any and all claims, causes of action, or other proceedings not arising: (i) as to the enforcement of any provision of this Agreement, or (ii) as to the enforcement or interpretation under applicable federal or state telecommunications law. Moreover, if the Commission would not have authority to grant an award of damages after issuing a ruling finding fault or liability in connection with a dispute under this Agreement, either Party may pursue such award in any court of competent jurisdiction after such Commission finding.

14. Taxes

14.1 Definition. For purposes of this Section, the terms “taxes” and “fees” shall include but not be limited to federal, state or local sales, use, excise, gross receipts or other taxes or tax-like fees of whatever nature and however designated (including tariff surcharges and any fees, charges or other payments, contractual or otherwise, for the use of public streets or rights of way, whether designated as franchise fees or otherwise) imposed, or sought to be imposed, on or with respect to the services furnished hereunder or measured by the charges or payments therefore, excluding any taxes levied on income.

14.2 Taxes and Fees Imposed Directly On Either Providing Party or Purchasing Party.

14.2.1 Taxes and fees imposed on the providing Party, which are not permitted or required to be passed on by the providing Party to its customer, shall be borne and paid by the providing Party.

14.2.2 Taxes and fees imposed on the purchasing Party, which are not required to be collected and/or remitted by the providing Party, shall be borne and paid by the purchasing Party.

14.3 Taxes and Fees Imposed on Purchasing Party But Collected And Remitted By Providing Party.

14.3.1 Taxes and fees imposed on the purchasing Party shall be borne by the purchasing Party, even if the obligation to collect and/or remit such taxes or fees is placed on the providing Party.

14.3.2 To the extent permitted by applicable law, any such taxes and/or fees shall be shown as separate items on applicable billing documents between the Parties. Notwithstanding the foregoing, the purchasing Party shall remain liable for any such taxes and fees regardless of whether they are actually billed by the providing Party at the time that the respective service is billed.

14.3.3 If the purchasing Party determines that in its opinion any such taxes or fees are not payable, the providing Party shall not bill such taxes or fees to the purchasing Party if the purchasing Party provides written certification, reasonably satisfactory to the providing Party, stating that it is exempt or otherwise not subject to the tax or fee, setting forth the basis therefor, and satisfying any other requirements under applicable law. If any authority seeks to collect any such tax or fee that the purchasing Party has determined and certified not to be payable, or any such tax or fee that was not billed by the providing Party, the purchasing Party may contest the same in good faith, at its own expense. In any such contest, the purchasing Party shall promptly furnish the providing Party with copies of all filings in any proceeding, protest, or legal challenge, all rulings issued in connection therewith, and all correspondence between the purchasing Party and the taxing authority.

14.3.4 In the event that all or any portion of an amount sought to be collected must be paid in order to contest the imposition of any such tax or fee, or to avoid the existence of a lien on the assets of the providing Party during the pendency of such contest, the purchasing Party shall be responsible for such payment and shall be entitled to the benefit of any refund or recovery.

14.3.5 If it is ultimately determined that any additional amount of such a tax or fee is due to the imposing authority, the purchasing Party shall pay such additional amount, including any interest and penalties thereon.

14.3.6 Notwithstanding any provision to the contrary, the purchasing Party shall protect, indemnify and hold harmless (and defend at the purchasing Party's expense) the

providing Party from and against any such tax or fee, interest or penalties thereon, or other charges or payable expenses (including reasonable attorney fees) with respect thereto, which are incurred by the providing Party in connection with any claim for or contest of any such tax or fee.

14.3.7 Each Party shall notify the other Party in writing of any assessment, proposed assessment or other claim for any additional amount of such a tax or fee by a taxing authority; such notice to be provided, if possible, at least ten (10) calendar days prior to the date by which a response, protest or other appeal must be filed, but in no event later than thirty (30) calendar days after receipt of such assessment, proposed assessment or claim.

14.4 Taxes and Fees Imposed on Providing Party But Passed On To Purchasing Party.

14.4.1 Taxes and fees imposed on the providing Party, which are permitted or required to be passed on by the providing Party to its customer, shall be borne by the purchasing Party.

14.4.2 To the extent permitted by applicable law, any such taxes and/or fees shall be shown as separate items on applicable billing documents between the Parties. Notwithstanding the foregoing, the purchasing Party shall remain liable for any such taxes and fees regardless of whether they are actually billed by the providing Party at the time that the respective service is billed. The Parties agree to use good faith efforts to bill taxes promptly.

14.4.3 If the purchasing Party disagrees with the providing Party's determination as to the application or basis for any such tax or fee, the Parties shall consult with respect to the imposition and billing of such tax or fee. Notwithstanding the foregoing, the providing Party shall retain ultimate responsibility for determining whether and to what extent any such taxes or fees are applicable, and the purchasing Party shall abide by such determination and pay such taxes or fees to the providing Party. The purchasing Party shall retain the right to contest, or to have the providing Party contest on its behalf, the imposition of such taxes and fees; provided however, that any such contest undertaken by or at the request of the purchasing Party shall be at the purchasing Party's expense.

14.4.4 In the event that all or any portion of an amount sought to be collected must be paid in order to contest the imposition of any such tax or fee, or to avoid the existence of a lien on the assets of the providing Party during the pendency of such contest, the purchasing Party shall be responsible for such payment and shall be entitled to the benefit of any refund or recovery.

14.4.5 If it is ultimately determined that any additional amount of such a tax or fee is due to the imposing authority, the purchasing Party shall pay such additional amount, including any interest and penalties thereon.

14.4.6 Notwithstanding any provision to the contrary, the purchasing Party shall protect, indemnify and hold harmless (and defend at the purchasing Party's expense) the providing Party from and against any such tax or fee, interest or penalties thereon, or other reasonable charges or payable expenses (including reasonable attorneys' fees) with respect thereto, which are incurred by the providing Party in connection with any claim for or contest of any such tax or fee.

14.4.7 Each Party shall notify the other Party in writing of any assessment, proposed assessment or other claim for any additional amount of such a tax or fee by a taxing authority; such notice to be provided, if possible, at least ten (10) calendar days prior to the date by which a response, protest or other appeal must be filed, but in no event later than thirty (30) calendar days after receipt of such assessment, proposed assessment or claim.

14.5 Mutual Cooperation. In any contest of a tax or fee by one Party, the other Party shall cooperate fully by providing records, testimony and such additional information or assistance as may reasonably be necessary to pursue the contest. Further, the other Party shall be reimbursed for any reasonable and necessary out-of-pocket copying and travel expenses incurred in assisting in such contest.

15. Network Maintenance and Management

15.1 The Parties shall work cooperatively to implement this Agreement. The Parties shall exchange appropriate information (e.g., maintenance contact numbers, network information, information required to comply with law enforcement and other security agencies of the Government, etc.) as reasonably required to implement and perform this Agreement.

15.2 Each Party hereto shall design, maintain and operate their respective networks as necessary to ensure that the other Party hereto receives service quality which is consistent with generally accepted industry standards at least at parity with the network service quality given to itself, its Affiliates, its customers or any other Telecommunications Carrier.

15.3 AT&T agrees to provide NuVox prior notice consistent with applicable FCC rules and the Act of changes in information or technical specifications necessary for the transmission and routing of services using AT&T's facilities or networks, as well as other changes that affect the interoperability of those respective facilities and networks.

16. Force Majeure

16.1 In the event performance of this Agreement, or any obligation hereunder, is either directly or indirectly prevented, restricted, or interfered with by reason of fire, flood, earthquake or like acts of God, wars, revolution, civil commotion, explosion, acts of public enemy, embargo, acts of the government in its sovereign capacity, labor difficulties, including without limitation, strikes, slowdowns,

picketing, or boycotts, unavailability of equipment from vendor, changes requested by NuVox, or any other circumstances beyond the reasonable control and without the fault or negligence of the Party affected, the Party affected, upon giving prompt notice to the other Party, shall be excused from such performance on a day-to-day basis to the extent of such prevention, restriction, or interference (and the other Party shall likewise be excused from performance of its obligations on a day-to-day basis until the delay, restriction or interference has ceased); provided, however, that the Party so affected shall use diligent efforts to avoid or remove such causes of non-performance and both Parties shall proceed whenever such causes are removed or cease.

17. **Modification of Agreement**

17.1 AT&T shall make agreements available to NuVox in accordance with 47 USC § 252(i) and 47 C.F.R. § 51.809.

17.2 If NuVox changes its name or makes changes to its company structure that affects the identity of NuVox due to a merger, acquisition, transfer or any other reason, it is the responsibility of NuVox to notify AT&T of said change and request that an amendment to this Agreement, if necessary, be executed to reflect said change.

17.3 No modification, amendment, supplement to, or waiver of the Agreement or any of its provisions shall be effective and binding upon the Parties unless it is made in writing and duly signed by the Parties.

17.4 In the event that any (1) effective legislative, regulatory, judicial or other legal action or (2) obligation or commitment regarding interconnection, resale or access to network elements which obligation or commitment expressly applies generically to all CLECs made by AT&T to any state or federal regulatory authority or the U.S. Department of Justice ("Governmental Body") in connection with any merger or regulatory proceeding regarding AT&T's obligations under the Act,) materially affects any material terms of this Agreement, or the ability of NuVox or AT&T to perform any material terms of this Agreement, NuVox or AT&T may, on thirty (30) calendar days' written notice, require that such terms be renegotiated, and the Parties shall renegotiate in good faith such mutually acceptable new terms as may be required. In the event that such new terms are not renegotiated within forty-five (45) calendar days after such notice, the Dispute may at any time thereafter be resolved in accordance with the Dispute Resolution procedure set forth in this Agreement.

18. **Non-Waiver of Legal Rights**

18.1 Execution of this Agreement by either Party does not confirm or imply that the executing Party agrees with any decision(s) issued pursuant to the Telecommunications Act of 1996. Neither Party waives its rights to appeal or otherwise challenge any such decision(s) and each Party reserves all of its rights

to pursue any and all legal and/or equitable remedies, including appeals of any such decision(s).

19. **One Agreement**

19.1 Subject to the provisions of Sections 17 and 20, the Parties acknowledge that they negotiated this Agreement as a single contract and do not consider the separate Attachments of this Agreement to be separate contracts. Each Attachment contains provisions that are subject to the provisions of the General Terms and Conditions; application of some provisions may require or trigger application of provisions in other Attachments hereto.

20. **Severability**

20.1 If any provision of this Agreement, or part thereof, shall be held to be invalid or unenforceable in any respect, such invalidity or unenforceability shall not invalidate the entire Agreement, unless such construction would be unreasonable. The Agreement shall be construed as if it did not contain the invalid or unenforceable provision or provisions, and the rights and obligations of each Party shall be construed and enforced accordingly. Provided, however, that in the event such invalid or unenforceable provision or provisions are essential elements of this Agreement and substantially impair the rights or obligations of either Party, the Parties shall promptly negotiate a replacement provision or provisions. In the event the Parties are unable to mutually negotiate such replacement language, either Party may elect to pursue the dispute resolution process set forth in Section 13 above.

21. **No Waiver**

21.1 A failure or delay of either Party to enforce any of the provisions hereof, to exercise any option which is herein provided, or to require performance of any of the provisions hereof shall in no way be construed to be a waiver of such provisions or options, and each Party, notwithstanding such failure, shall have the right thereafter to insist upon the performance of any and all of the provisions of this Agreement.

22. **Governing Law**

22.1 Where applicable, this Agreement shall be governed by and construed in accordance with federal and state substantive telecommunications law, including rules and regulations of the FCC and appropriate Commission. In all other respects, this Agreement shall be governed by and construed and enforced in accordance with the laws of the State of Georgia without regard to its conflict of laws principles.

23. **Assignments**

23.1 Except as provided herein, any assignment by either Party to any non-affiliated entity of any right, obligation or duty, or of any other interest hereunder, in whole or in part, without the prior written consent of the other Party shall be void. A Party may assign this Agreement or any right, obligation, duty or other interest hereunder to an Affiliate of the Party or to an entity purchasing all or substantially all of the Party's assets without the consent of the other Party; provided, however, that the assigning Party shall notify the other Party in writing of such assignment thirty (30) calendar days prior to the Effective Date thereof and, provided further, if the assignee is an assignee of NuVox, the assignee must provide evidence of Commission CLEC certification. The Parties shall amend this Agreement to reflect such assignments and shall work cooperatively to implement any changes required due to such assignment. All obligations and duties of any Party under this Agreement shall be binding on all successors in interest and assigns of such Party. No assignment or delegation hereof shall relieve the assignor of its obligations under this Agreement in the event that the assignee fails to perform such obligations. Notwithstanding anything to the contrary in this Section and unless the Parties agree otherwise, NuVox shall not assign this Agreement to any Affiliate or non-affiliated entity unless either (1) NuVox pays all bills, past due and current, under this Agreement, or (2) NuVox's assignee expressly assumes liability for payment of such bills.

24. **Notices**

24.1 Every notice, consent, approval, or other communications required or contemplated by this Agreement shall be in writing and shall be delivered by hand, by overnight courier or by U.S. Mail postage prepaid, addressed to:

NOTICE CONTACT	CLEC CONTACT
NAME/TITLE	Susan Berlin/Vice President, Senior Regulatory Counsel
STREET ADDRESS	Two North Main Street
CITY, STATE, ZIP CODE	Greenville, SC 29601
FACSIMILE NUMER	(864) 672-5105
PHONE NUMBER	(864) 331-7323
	AT&T CONTACT
NAME/TITLE	Contract Management ATTN: Notices Manager
STREET ADDRESS	311 S. Akard St. 9th floor Four AT&T Plaza

CITY,STATE, ZIP CODE	Dallas, TX 75202-5398
FACSIMILE NUMER	(214) 464-2006

24.2 Unless otherwise provided in this Agreement, notice by mail shall be effective on the date it is officially recorded as delivered by return receipt or equivalent, and in the absence of such record of delivery, it shall be presumed to have been delivered the fifth (5th) calendar day, or next business day after the fifth (5th) calendar day, after it was deposited in the mail. Notice by overnight courier shall be effective on the date it was delivered, except that notice delivered on a non-business day shall be deemed effective on the next business day.

24.3 Subject to Section 45.2 below, AT&T will post changes to business processes and policies, notices of new service offerings, and changes to service offerings not requiring an amendment to this Agreement, notices required to be posted to AT&T's web site, and any other information of general applicability to NuVox.

25. **Rule of Construction**

25.1 No rule of construction requiring interpretation against the drafting Party hereof shall apply in the interpretation of this Agreement.

26. **Headings of No Force or Effect**

26.1 The headings of Articles and Sections of this Agreement are for convenience of reference only, and shall in no way define, modify or restrict the meaning or interpretation of the terms or provisions of this Agreement.

27. **Cooperation in Preventing Customer Fraud**

27.1 The Parties agree to cooperate fully with one another to investigate, minimize, prevent and take action in cases of fraud by a customer involving the provision of services to NuVox under this Agreement**.**

28. **Revenue Protection**

28.1 AT&T shall make available to NuVox fraud prevention or revenue protection features, including prevention, detection, or control functionality embedded within any of the Network Elements or services provided pursuant to this Agreement. These features include switch functions such as screening codes and call blocking of international, 900 and 976 numbers. To the extent separate charges apply for such features, the charges will be set forth in the appropriate attachment to this Agreement or will be negotiated between the Parties and added to this Agreement via an amendment at such time as NuVox requests the features.

29. **Law Enforcement Interface**

29.1 Both Parties shall work cooperatively to comply with all legal or regulatory requirements related to number recording devices, including, for example, orders related to trap and trace and wire taps.

30. **Multiple Counterparts**

30.1 This Agreement may be executed in multiple counterparts, each of which shall be deemed an original, but all of which shall together constitute but one and the same document.

31. **Filing of Agreement**

31.1 Upon execution of this Agreement AT&T shall file the Agreement with the appropriate state regulatory agency pursuant to the requirements of Section 252 of the Act. Notwithstanding the foregoing, this Agreement shall not be submitted for approval by the appropriate state regulatory agency unless and until such time as NuVox is duly certified as a local exchange carrier in such state, except as otherwise required by a Commission.

32. **Compliance with Applicable Law**

32.1 Each Party shall comply at its own expense with all applicable federal, state, and local statutes, laws, rules, regulations, codes, effective orders, injunctions, judgments and binding decisions, awards and decrees that relate to its obligations under this Agreement ("Applicable Law").

32.2 Nothing in this Agreement shall be construed to limit a Party's rights or exempt a Party from obligations under Applicable Law, except in such cases where the Parties have explicitly or impliedly agreed to an exception to a requirement of Applicable Law or to abide by provisions which conflict with and thereby displace corresponding requirements of Applicable Law. Silence shall not be construed to be such an exemption to or displacement of any aspect of Applicable Law. Notwithstanding the foregoing, however, no Party may assert new rights or privileges not explicitly stated in this Agreement based on existing rules, regulations, rulings or other law that were not considered by the Parties at the time of the execution of this Agreement, unless consented to by the other Party to the Agreement.

32.3 Where a Commission has adopted rates for network elements or services provided under this Agreement, as of the Effective Date, it is the intent of the Parties that the Pricing Schedule incorporated into this Agreement will be those rates, unless otherwise negotiated by the Parties. Upon request of either Party, errors in rate sheets will be corrected up to ninety (90) calendar days retroactively, and prospectively, by amendment to this Agreement. This section shall not affect either Party's rights pursuant to Section 1.1.3 of Attachment 7 of this Agreement for charges other than those for which there is an error in the rates sheets.

33. **Necessary Approvals**

33.1 Each Party shall be responsible for obtaining and keeping in effect all approvals from, and rights granted by, governmental authorities, building and property

owners, other carriers, and any other persons that may be required in connection with the performance of its obligations under this Agreement. Each Party shall reasonably cooperate with the other Party in obtaining and maintaining any required approvals and rights for which such Party is responsible.

34. **Good Faith Performance**

34.1 Each Party shall act in good faith in its performance under this Agreement. Where notice, approval, consent, agreement or similar action by a Party is permitted or required by any provision of this Agreement (including without limitation, the obligation of the Parties to further negotiate the resolution of new or open issues under this Agreement), such action will not be unreasonably delayed, withheld or conditioned.

35. **Independent Contracting Parties**

35.1 Each Party is an independent contractor, and has and hereby retains the right to exercise full control of and supervision over its own performance of its obligations under this Agreement, and retains full control over the employment, direction, compensation and discharge of its employees assisting in the performance of such obligations. Each Party shall be solely responsible for all matters relating to payment of such employees, including compliance with social security taxes, withholding taxes and all other regulations governing such matters. Subject to the limitations on liability and except as otherwise provided in this Agreement, each Party shall be responsible for (i) its own acts and performance of all obligations imposed by Applicable Law in connection with its activities, legal status and property, real or personal and, (ii) the acts of its own Affiliates, employees, agents and contractors during the performance of the Party's obligations hereunder.

36. **Subcontracting**

36.1 If any obligation is performed through a subcontractor, each Party shall remain fully responsible for the performance of this Agreement in accordance with its terms, including any obligations either Party performs through subcontractors, and each Party shall be solely responsible for payments due the Party's subcontractors. No contract, subcontract or other Agreement entered into by either Party with any third party in connection with the provision of any facilities or services provided herein, shall provide for any indemnity, guarantee or assumption of liability by, or other obligation of, the other Party to this Agreement with respect to such arrangement, except as consented to in writing by the other Party. No subcontractor shall be deemed a third party beneficiary for any purposes under this Agreement. Any subcontractor who gains access to CPNI or Confidential Information covered by this Agreement shall be required by the subcontracting Party to protect such CPNI or Confidential Information to the same extent that the subcontracting Party is required to protect the same under the terms of this Agreement.

37. **Labor Relations**

37.1 The Parties shall endeavor to minimize impairment of service to the other Party in the event of a labor dispute to the extent permitted by Applicable Law.

38. **Compliance with the Communications Assistance for Law Enforcement Act of 1994 ("CALEA")**

38.1 Each Party represents and warrants that any equipment, facilities or services provided to the other Party under this Agreement comply with CALEA. Each Party shall indemnify and hold the other Party harmless from any and all penalties imposed upon the other Party for such other Party's noncompliance.

39. **Customer Inquiries**

39.1 Calls about the Other Party's Products and Services. Each Party shall refer all questions regarding the other Party's services or products directly to the other Party at a telephone number specified by the other Party. Each Party shall ensure that all their representatives who receive inquiries regarding the other Party's services or products: (i) provide such numbers, if available to the personnel receiving the call, to callers who inquire about the other Party's services or products; (ii) do not in any way disparage or discriminate against the other Party, or its products or services; and (iii) do not provide information about their products or services during that same inquiry/subscriber contact, unless that information specifically is requested by the caller. Subject to the limitations of this Section, both Parties maintain the right to serve directly any customer within the service area of the other Party. Both Parties may directly market their own telecommunications products and services and in doing so may establish independent relationships with customers of the other Party.

40. **Additional Fair Competition Requirements**

40.1 In the event that AT&T transfers facilities or other assets to an Affiliate during the term of this Agreement, which are necessary in order for AT&T to comply with its obligations under this Agreement, and AT&T is required by law to continue to provide such interconnection, services or network elements under this Agreement even after such transfer, then such obligations hereunder shall survive and AT&T shall continue to perform such obligations. In the event that AT&T transfers facilities or other assets to an Affiliate during the term of this Agreement, which are necessary in order for AT&T to comply with its obligations under this Agreement, and AT&T is relieved of its obligations to provide such interconnection, services or network elements, but such Affiliate is required by law to perform such obligations to the extent that AT&T was required to, then AT&T shall be relieved of its obligations hereunder and such obligations shall survive and transfer to such Affiliate pursuant to the Assignment Section hereof.

40.2 AT&T shall allow NuVox's local exchange customers to select AT&T for the provision of intraLATA toll services to the extent AT&T makes such stand alone intraLATA services available to the general public on a nondiscriminatory basis.

40.3 Each Party shall protect the confidentiality of proprietary information of, and relating to, the other Party and its customers or any other carrier. If either Party receives or obtains proprietary information from the other for the purposes of providing services under this agreement, such Party shall use such information only for such purpose and shall not use such information for its own marketing purpose.

41. **Posting of Agreements**

41.1 AT&T shall post on its web site any AT&T interconnection agreement between AT&T and any third party no later than ten (10) calendar days after the approval of such agreement with the Commission.

42. **Nonexclusive Dealings**

42.1 This Agreement does not prevent either Party from providing or purchasing services to or from any other person.

43. **Rate True-Up**

43.1 This Section applies to Network Interconnection and/or Unbundled Network Elements and Other Services rates that are expressly subject to true-up under this Agreement**.**

43.2 The designated true-up rates shall be trued-up, either up or down, based on final prices determined either by further agreement between the Parties, or by a final order of the Commission. The Parties shall implement the true-up by comparing the actual volumes and demand for each item, together with the designated true-up rates for each item, with the final prices determined for each item. Each Party shall keep its own records upon which the true-up can be based, and any final payment from one Party to the other shall be in an amount agreed upon by the Parties based on such records. In the event of any disagreement as between the records or the Parties regarding the amount of such true-up, the Parties shall submit the matter to the Dispute Resolution process in accordance with the provisions of Section 13 above of the General Terms and Conditions of this Agreement.

44. **Survival**

44.1 In no event shall the expiration or termination for any reason of this Agreement relieve either Party of any liability or obligation accruing in favor of the other Party in respect of acts or omissions occurring prior thereto**.** Any liabilities and all obligations of each Party under the provisions regarding indemnification,

confidentiality of information, liability, and any other provisions of this Agreement that by their specific nature or express terms are contemplated to survive (or be performed) thereafter shall survive expiration or termination.

45. **Entire Agreement**

45.1 This Agreement means the General Terms and Conditions, the Attachments identified in Section 45.4 below, and subject to the limitations set forth in Section 45.2 all documents identified herein. This Agreement sets forth the entire understanding and supersedes prior agreements between the Parties relating to the subject matter contained in this Agreement and merges all prior discussions between them. Any orders placed under prior agreements between the Parties shall be governed by the terms of this Agreement. Any and all amounts and obligations owed for services provisioned or orders placed under prior agreements between the Parties, related to the subject matter hereof, shall be due and owing under this Agreement and be governed by the terms and conditions of this Agreement as if such services or orders were provisioned or placed under this Agreement. Neither Party shall be bound by any definition, condition, provision, representation, warranty, covenant or promise other than as expressly stated in this Agreement or as is contemporaneously or subsequently set forth in writing and executed by a duly authorized officer or representative of the Party to be bound thereby.

45.2 **Guides**

45.2.1 The Parties acknowledge that certain provisions of this Agreement reference certain AT&T documents and publications (collectively referred to herein as the "Guides"). All Guides referred to in this Agreement, are incorporated herein and made a part hereof by reference. To the extent that there is a conflict between a provision of a Guide and a provision of this Agreement, the provision of this Agreement shall prevail. AT&T may, from time to time during the term hereof, change or alter said Guides (including replacing a Guide entirely with a successor Guide with a different name). The Parties agree that if the change or alteration was made to AT&T's OSS interface Guides as a result of the Change Control Process (CCP), results from a revision to a generally accepted and implemented industry standard or guideline (e.g. Ordering Billing Forum (OBF), Telcordia guidelines, etc.), or other legal requirement directly affecting the Guides provided, if such legal requirement would be subject to the change of law provision in these General Terms and Conditions, the change to the Guide would not be applicable until this Agreement is amended to reflect the update to the Guide, or if NuVox agrees to such change or alteration, any such change or alteration shall become effective as specified in the terms of the notice to NuVox via the applicable Internet website posting. In all other cases, a change in a Guide which (1) alters, amends or conflicts with any term of this Agreement; (2) changes any charge or rate, or the application of any charge or rate, specified in this Agreement; (3) adds a new rate or rate element not previously specified in the

Agreement; (4) causes NuVox to incur material cost or expense to implement the change or alteration; or (5) increases an interval set forth in this agreement, will not be effective with respect to NuVox until AT&T and NuVox sign an amendment to this Agreement reflecting the changes described in items (1), (2), (3) or (5**)**; or unless NuVox fails to inform AT&T in writing that it does not agree to such change or alteration within forty-five (45) calendar days of notice of such change being given to NuVox for item (4). For purposes of item (4), a cost or expense shall be deemed material if it imposes a financial burden on NuVox, but shall not include costs associated with disseminating notice of the change or providing training regarding the change to employees. In addition, AT&T will provide such notices via e-mail for up to ten (10) addresses specified by NuVox. NuVox should contact its Senior Contract Account Manager (SrCAM) to establish this capability.

In the event that the Parties disagree as to whether any alteration or amendment described in this Section is effective as to NuVox pursuant to the requirements of this Section, either Party may, at its option, seek resolution of the dispute in accordance with the Dispute Resolution provisions in the General Terms and Conditions of this Agreement. In cases where there is a dispute with respect to any alteration or amendment described in this Section becoming effective as to NuVox, such alteration or amendment described in this Section shall not become effective as to NuVox until there is mutual agreement between the Parties that it should become effective or an order resulting from the Dispute Resolution process finding in favor of its becoming effective.

45.3 In various provisions of this Agreement, the Parties have included references to tariffs filed by the Parties. If such tariff is referenced for the purposes of a service that is provisioned pursuant to such tariff, and there is a conflict between such referenced tariff provisions and this Agreement, the terms of the tariff shall control. If the service is provisioned pursuant to this Agreement but the tariff is referenced for a rate, an interval or another purpose, to the extent that there is a conflict between such referenced tariff provision and this Agreement, and except as otherwise set forth in this Agreement, the terms of this Agreement shall prevail.

45.4 This Agreement includes eleven (11) Attachments with provisions for the following:

Resale
Network Elements and Other Services
Network Interconnection
Collocation
Access to Numbers and Number Portability
Pre-Ordering, Ordering, Provisioning, Maintenance and Repair
Billing
Rights-of-Way, Conduits and Pole Attachments
Performance Measurements

AT&T Disaster Recovery Plan
Bona Fide Request/New Business Request Process

45.5 The following services are included as options for purchase by NuVox pursuant to the terms and conditions set forth in this Agreement. NuVox may elect to purchase said services by written request to its Local Contract Manager if applicable:

Optional Daily Usage File (ODUF)
Enhanced Optional Daily Usage File (EODUF)
Access Daily Usage File (ADUF)
Line Information Database (LIDB) Storage
Centralized Message Distribution Service (CMDS)
Calling Name (CNAM)
LNP Data Base Query Service

NuVox Communications, Inc. d/b/a NuVox

By: Susan J. Berlin

Name: Susan J. Berlin

Title: VP, Senior Regulatory Counsel

Date: November 3, 2009

BellSouth Telecommunications, Inc. d/b/a AT&T South Carolina by AT&T Operations, Inc., its authorized agent

By:

Name: Eddie A. Reed, Jr.

Title: Director-Interconnection Agreements

Date: 11-6-09

Attachment 1

Resale

Table of Contents

1. Discount Rates 3

2. Definition of Terms 3

3. General Provisions 3

4. AT&T's Provision of Services to NuVox 7

5. Maintenance of Services 11

6. Establishment of Account 12

7. Establishment of Service……..……12

8. Discontinuance of Service to Customers 12

9. Discontinuance of Service to NuVox……...12

10. Operator Services (Operator Call Processing and Directory Assistance) 12

11. Line Information Database (LIDB) 17

12. RAO Hosting 17

13. Optional Daily Usage File (ODUF) 17

14. Enhanced Optional Daily Usage File (EODUF) 17

Resale Restrictions **Exhibit A**

Line Information Database (LIDB) Storage Agreemt **Exhibit B**

Optional Daily Usage File (ODUF) **Exhibit C**

Enhanced Option Daily Usage File (EODUF) **Exhibit D**

RESALE

1. Discount Rates

1.1 The Commission-approved discount rates applied to NuVox purchases of AT&TAT&T Services for the purpose of resale shall be as set forth in the Pricing Schedule. Such discounts have been determined by the applicable Commission to reflect the costs avoided by AT&T when selling a service for wholesale purposes.

1.2 The telecommunications services available for purchase by NuVox for the purposes of resale to NuVox's customers shall be available at AT&T's tariffed rates less the discount set forth in the Pricing Schedule and subject to the exclusions and limitations set forth in Exhibit A to this Agreement.

2. Definition of Terms

2.1 CUSTOMER OF RECORD means the entity responsible for placing application for service; requesting additions, rearrangements, maintenance or discontinuance of service; payment in full of charges incurred such as non-recurring, monthly recurring, toll, directory assistance, etc.

2.2 RESALE means an activity wherein a certificated CLEC, such as NuVox, subscribes to the telecommunications services of AT&T and then offers those telecommunications services to the public.

3. General Provisions

3.1 All of the negotiated rates, terms and conditions set forth in this Attachment pertain to the resale of AT&T's retail telecommunications services and other services specified in this Attachment. AT&T shall make available to NuVox for resale those telecommunications services that AT&T is required to offer for resale pursuant to the 1996 Act and applicable FCC and Commission rules and orders. AT&T currently makes such services available pursuant to its General Subscriber Services Tariff and Private Line Services Tariff.

3.1.1 When NuVox provides Resale service in a cross boundary area (areas that are part of the local serving area of another state's exchange) the rates, regulations and discounts for the tariffing state will apply. Billing will be from the serving state.

3.1.2 In Tennessee, if NuVox does not resell Lifeline service to any customers, and if NuVox agrees to order an appropriate Operator Services/Directory Assistance block as set forth in AT&T's General Subscriber Services Tariff, the discount shall be 21.56%.

3.1.2.1 In the event NuVox resells Lifeline service to any customer in Tennessee, AT&T will begin applying the 16% discount rate to all services. Upon NuVox and AT&T's implementation of a billing arrangement whereby a separate Master Account (Q-account) associated with a separate Operating Customer Number (OCN) is established for billing of Lifeline service customers, the discount shall be applied as set forth in 3.1.2 preceding for the non-Lifeline affected Master Account (Q-account).

3.1.2.2 NuVox must provide written notification to AT&T within 30 days prior to either providing its own operator services/ directory services or orders the appropriate operator services/directory assistance blocking, to qualify for the higher discount rate of 21.56%.

3.2 NuVox may purchase resale services from AT&T for its own use in operating its business. The resale discount will apply to those services under the following conditions:

3.2.1 NuVox must resell services to other customers.

3.2.2 NuVox cannot be a CLEC for the single purpose of selling to itself.

3.3 NuVox will be the customer of record for all services purchased from AT&T. Except as specified herein, AT&T will take orders from, bill and receive payment from NuVox for said services.

3.4 AT&T shall have no contact with the customer except to the extent provided for in this Agreement**.**

3.5 Nothing herein shall affect AT&T's rights, consistent with applicable law, to: (i) bill the customer for any services that the customer specifies it wishes to receive directly from AT&T, (ii) serve directly any customer within the service area of NuVox, or (iii) market directly its own telecommunications products and services and in doing so may establish independent relationships with customers of NuVox consistent with applicable law.

3.5.1 When an customer of NuVox or AT&T elects to change his/her carrier to the other Party, both Parties agree to release the customer's service to the other Party concurrent with the due date of the service order, which shall be established based on the reasonable and non discriminatory standard interval for the customer's requested service as set forth in the AT&T Product and Services Interval Guide.

3.5.2 AT&T and NuVox will refrain from contacting a customer who has placed or whose selected carrier has placed on the customer's behalf an order to change the customer's service provider from AT&T or NuVox to the other Party until such time that the order for service has been completed. The Parties agree to comply

with any applicable FCC and Commission rules and orders with respect to contacting customers who have elected to change telecommunications carriers.

3.6 Neither Party nor the customer has a property right to the telephone number or any other call number designation associated with services furnished by AT&T, and no right to the continuance of service through any particular central office. The customer to whom a telephone number associated with services furnished by AT&T has been assigned has the right to continue using the telephone number to receive those services unless AT&T is required to change the telephone number in connection with the implementation of area code relief in the form of a geographic split and/or NXX change, in which case AT&T shall have the right to change the telephone numbers, the central office designation associated with such numbers or both after providing NuVox a period of notice in accordance with the FCC's Notices of Network Change rules. Such number changes shall be done only when AT&T deems it necessary to do so in the conduct of its business and in accordance with AT&T practices and procedures on a reasonable and nondiscriminatory basis. Nothing in this Agreement shall affect the ability of a customer to port any telephone number associated with services furnished by AT&T to a different service provider in accordance with applicable FCC rules and industry guidelines.

3.7 Service is furnished subject to the condition that it will not be used for any unlawful purpose.

3.8 Service will be discontinued if any law enforcement agency advises that the service being used is in violation of the law.

3.9 AT&T can refuse service in accordance with Section A2.2.9 of its General Subscriber Services Tariffs and Section B2.2.2 of its Private Line Services Tariffs.

3.10 AT&T will cooperate with law enforcement agencies with subpoenas and court orders relating to NuVox's customers, pursuant to Section 6 of the General Terms and Conditions.

3.11 If appropriate NuVox personnel have actual knowledge that one of its customers is utilizing an AT&T resold telecommunications service in a manner that is not consistent with the terms and conditions of the tariff applicable to such service, NuVox will take corrective action and will discontinue provisioning of such service if not cured within thirty (30) calendar days.

3.12 Facilities and/or equipment utilized by AT&T to provide service to NuVox remain the property of AT&T.

3.13 White page directory listings for NuVox customers will be provided in accordance with Section 5 of the General Terms and Conditions.

3.14 Service Ordering and Operational Support Systems (OSS)

3.14.1 NuVox must order services through resale interfaces, i.e., the Local Carrier Service Center (LCSC) and/or appropriate Complex Resale Support Group (CRSG) pursuant to this Agreement. AT&T has developed and made available the interactive interfaces by which NuVox may submit a Local Service Request (LSR) electronically as set forth in Attachment 2 of this Agreement. Service orders will be in a reasonable standard format designated by AT&T and will be required on a nondiscriminatory basis.

3.14.2 LSRs submitted by means of one of these interactive interfaces will incur an OSS electronic charge as set forth in the Pricing Schedule. An individual LSR will be identified for billing purposes by its Purchase Order Number (PON). LSRs submitted by means other than one of these interactive interfaces (Mail, fax, courier, etc.) will incur a manual order charge as set forth in the Pricing Schedule. Supplements or clarifications to a previously billed LSR will not incur an additional OSS charge over and above the original OSS charge.

3.14.3 Denial/Restoral OSS Charge. In the event NuVox provides a list of customers to be denied and restored, rather than an LSR, each location on the list will require a separate PON and therefore will be billed as one LSR per location.

3.14.4 Cancellation OSS Charge. NuVox will incur an OSS charge for an accepted LSR that is later canceled.

3.15 AT&T shall provide 911/E911 for NuVox customers in the same manner that it is provided to AT&T customers. AT&T shall provide and validate NuVox customer information to the PSAP. AT&T shall use its service order process to update and maintain, on the same schedule that it uses for its customers, the NuVox customer service information in the ALI/DMS (Automatic Location Identification/Location Information) databases used to support 911/E911 services.

3.16 AT&T shall bill, and NuVox shall pay, the customer line charge associated with implementing Number Portability as set forth in AT&T's FCC No. 1 tariff. This charge is not subject to the wholesale discount.

3.17 Pursuant to 47 CFR Section 51.617, AT&T shall bill to NuVox, and NuVox shall pay, the customer common line charges identical to the customer common line charges AT&T bills its customers.

3.18 New Resale Services/Changes in Provision of Resale Services. AT&T may provide NuVox notice via Internet posting of price changes and changes to the terms and conditions of services available for resale. AT&T shall provide notice within the timeframes ordered by the Commission for the provision of notice to CLECs by AT&T regarding changes to resold services. Where no such Commission requirement exists, AT&T shall provide notice of discontinuance of resold services and notice of rate increases on resold services ten (10) calendar days prior to NuVox's obligation to provide notice of discontinuance of resold services and notice of rate increases on resold services to its customers pursuant to Commission rule or order. AT&T will post on its website changes to business processes and policies, notices of new service offerings, and changes to service offerings not requiring an amendment to this Agreement, notices required to be posted, and any other information of general applicability to CLECs.

4. AT&T's Provision of Services to NuVox for Resale

4.1 The resale of telecommunications services shall be limited to users and uses conforming to the class of service restrictions.

4.1.1 AT&T may request relevant documentation related to services purchased by NuVox to verify NuVox's claims for discounts and asserted volumes, if AT&T has a reasonable basis upon which to suspect that such claims are invalid. Such request shall be made on a nondiscriminatory basis and shall not occur more than once in a twelve (12) month period. NuVox shall maintain sufficient records and data, for a period up to six (6) months, that are relevant and reasonably necessary to determine compliance with tariff provisions regarding such discounts and for verifying asserted volumes to AT&T. AT&T shall bear the costs associated with said request if such claims for discounts and volumes are valid. Any information provided by NuVox for purposes of such request shall be deemed Confidential Information pursuant to the General Terms and Conditions of this Agreement.

4.2 Subject to Exhibit A hereto, resold services can only be used in the same manner as specified in AT&T's Tariffs. Resold services are subject to the same terms and conditions as are specified for such services when furnished to an individual customer of AT&T in the appropriate section of AT&T's Tariffs. In accordance with FCC 47 C.F.R. Section 51.603, AT&T will provide services to NuVox for resale that are equal in quality, subject to the same conditions, and provided within the same provisioning time intervals that AT&T provides these services to others, including customers. Usage allowances (e.g., Business Plus* service) described in AT&T's tariffs shall not be aggregated for more than one customer or across multiple resold services. Volume discount offerings (e.g., Watsaver® service) may be aggregated by NuVox for multiple customers.

4.3 NuVox may resell services only within the specific service area as defined in its certificate of operation approved by the Commission.

4.4 If NuVox cancels an order for resold services, any costs incurred by AT&T in conjunction with provisioning of such order will be recovered in accordance with AT&T's General Subscriber Services Tariffs and Private Line Services Tariffs.

4.5 Service Jointly Provisioned with an Independent Company or Competitive Local Exchange Company Areas

4.5.1 AT&T will in some instances provision resold services in accordance with the General Subscriber Services Tariff and Private Line Tariffs jointly with an Independent Company or other Competitive Local Exchange Carrier.

4.5.2 When NuVox assumes responsibility for such service, all terms and conditions defined in the Tariff will apply for services provided within the AT&T service area only.

4.5.3 Service terminating in an Independent Company or other Competitive Local Exchange Carrier area will be provisioned and billed by the Independent Company or other Competitive Local Exchange Carrier directly to NuVox.

4.5.4 NuVox must establish a billing arrangement with the Independent Company or other Competitive Local Exchange Carrier prior to assuming a customer account where such circumstances apply.

4.6 Requirements for Specific Services. AT&T shall make available for resale the services included in this Section 4.6 at the discounts set forth in the Pricing Schedule and in accordance with Exhibit A to this Attachment.

4.6.1 Lifeline and Link-up. AT&T shall make available Lifeline and Link-up Services for resale in accordance with Commission and FCC rules and regulations and with the reasonable and nondiscriminatory terms and conditions set forth in AT&T's applicable tariffs. Such services shall be available to NuVox for resale only to those NuVox subscribers who meet the qualifications as set forth in applicable regulations. AT&T shall indicate with a USOC on the customer service record if a customer is subscribing to Lifeline or Link-up. NuVox shall comply with all aspects of the FCC's and the Commission's orders and rules implementing Lifeline and Link-up programs. To the extent other Voluntary Federal Subscriber Financial Assistance Programs are offered by AT&T and to the extent AT&T is required to make such programs available for resale, such programs shall be offered to NuVox on rates, terms and conditions as required by Applicable Law.

4.6.2 Grandfathered Services. AT&T shall offer for resale to NuVox pursuant to FCC 47 C.F.R. 51.615 all grandfathered services.

4.6.3 N11 Service. AT&T shall make available for resale any existing N11 services at the discount rates set forth in the Pricing Schedule and in accordance with Exhibit A to this Attachment 1.

4.6.4 911/E911 Service. NuVox shall have the right to resell 911 or E911 services.

4.6.5 Customer Specific Offerings Including Contract Service Arrangements (CSAs) and other contractual arrangements. CSAs shall be available for resale, at the same rates, terms and conditions offered to AT&T's customers, and in accordance with Commission and FCC Rules and Regulations less the wholesale discount set forth in the Pricing Schedule. In cases where NuVox resells an existing CSA, termination liability will not be triggered by a transfer of the CSA from AT&T to NuVox. NuVox may resale an existing CSA to the existing customer or to another similarly situated customer. Customers are similarly situated if their quantity of use and time of use, and the manner and costs of service are the same.

4.6.6 Promotions. For purposes of this Agreement, a "short term" promotion will be as set forth in FCC 47 C.F.R. 51.613.

4.6.6.1 AT&T shall make Telecommunications Services subject to short term promotions available to NuVox at the short term promotional rate consistent with Exhibit A.

4.6.6.2 The inclusion of a telecommunications service, available for resale at a resale discount, as a component of a promotion, shall not relieve AT&T of the obligation to offer such underlying telecommunications service separately for resale at the resale discount.

4.6.6.3 Promotions of greater than 90 days will be available to NuVox for resale.

4.6.7 Special Assemblies. Existing special assembly agreements for telecommunications services shall be available for resale, at the same terms and conditions offered to AT&T's customers. A special assembly shall be made available for resale at the price of the special assembly less the wholesale discount. NuVox shall be responsible for all terms and conditions of such special assembly including but not limited to termination liability if applicable. Termination liability will not be triggered as a result of a transfer of the special assembly from AT&T to NuVox.

4.6.8 Volume Discount Plans. Subject to Section 4.2 to the extent AT&T offers, pursuant to its Tariffs, any services the rate for which varies depending upon the volume purchased or the term for which the subscribers commit to purchase such service, AT&T shall offer such services on the same terms and conditions to NuVox.

4.6.9 Pay Phone Service. AT&T shall make available to NuVox for resale Public Telephone Access Services (pay phone/PTAS) to the extent AT&T is required to do so pursuant to FCC and Commission rules.

4.6.10 Voice Mail Service. Where available to AT&T's customers, AT&T shall provide the following Telecommunications Services at a discount, as set forth in the Pricing Schedule, for use in conjunction with voice mail services:

- Message Waiting Indicator (MWI) stutter dial tone and message waiting light feature capabilities.
- CF/Busy (Call Forward Busy Line).
- CF/DA (Call Forward Don't Answer).

The services listed in AT&T's Messaging Services Information Package shall be made available for resale**,** without the wholesale discount, in conjunction with other tariff services offered for resale.

4.6.11 AT&T shall provide branding for, or shall unbrand, voice mail services for NuVox per the Bona Fide Request/New Business Request process as set forth in Attachment 11 of this Agreement**.**

4.6.12 Hotel and Hospital PBX services are the only telecommunications services available for resale to Hotel/Motel and Hospital customers, respectively in accordance with Section A2 of AT&T's GSST. Similarly, Access Line Service for Customer Provided Coin Telephones is the only local service available for resale to Payphone Service Provider (PSP) customers in accordance with Section A7 of AT&T's GSST. Shared Tenant Service customers can only be sold those local exchange access services available in Section A23 of AT&T's GSST in the states of Florida, Georgia, North Carolina and South Carolina, and in Section A27 of AT&T's GSST in the states of Alabama, Kentucky, Louisiana, Mississippi and Tennessee. Notwithstanding the foregoing, if AT&T offers other services that AT&T is obligated to make available for resale to CLECs at the wholesale discount to Hotel/Motel and Hospital customers, PSPs and shared tenant services customers, such services shall be available to NuVox for resale to such customers.

4.6.13 Advanced Intelligent Network (AIN). AT&T shall provide for resale all Advanced Intelligent Network (AIN) services currently provided pursuant to AT&T's GSST.

4.6.14 Miscellaneous Service Arrangements. NuVox may purchase at the wholesale discount set forth in the Pricing Schedule, the entire set of Miscellaneous Service Arrangements (contained in Section A13 of the GSST with the exception of Information Services), or a subset of any one or any combination of such features on an customer-specific basis, without restriction on the minimum or maximum

number of lines and features that may be purchased for any one level of service to the extent such restrictions do not apply to AT&T's retail customers.

4.6.15 Blocking Service. AT&T shall provide call blocking of 700, 900, and 976 services upon request as well as bill to third party and collect calls from NuVox on a line or trunk basis at parity pursuant to Section A13.9 of AT&T's General Subscriber Services Tariff.

4.6.16 Busy Line Verification (BLV) and Emergency Line Interrupt (ELI). Where AT&T does not route operator services traffic to NuVox's platform, AT&T shall perform BLV/ELI for NuVox on resold AT&T lines.

4.6.17 Inside Wire Maintenance Plan. AT&T's Inside Wire Maintenance Service Plan is available for resale in accordance with Exhibit A to this Attachment 1 and with Commission and FCC rules and regulations.

4.6.18 MemoryCall Service. AT&T's MemoryCall Service is available for resale in accordance with Exhibit A to this Attachment 1 and with Commission and FCC rules and regulations.

4.6.19 Mobile Services. AT&T's Mobile Services is available for resale in accordance with Exhibit A to this Attachment 1 and with Commission and FCC rules and regulations.

4.6.20 Federal Subscriber Line Charges. AT&T's Federal Subscriber Line Charges will be passed on to NuVox.

4.6.21 Non-Recurring Charges. Non-Recurring Charges associated with services available for resale, where applicable, will be assessed at the discount rates set forth in the Pricing Schedule and in accordance with Exhibit A to this Attachment and with Commission and FCC rules and regulations.

4.6.22 Customer Line Change/Number Portability Charge. AT&T's Customer Line Change/Federal Number Portability Charge will be passed on to NuVox.

4.6.23 AdWatch Service. AT&T's AdWatch Service is available for resale at the discount rates set forth in the Pricing Schedule and in accordance with Exhibit A to this Attachment and with Commission and FCC rules and regulations.

5. Maintenance of Services

5.1 Services resold pursuant to this Attachment and AT&T's General Subscriber Service Tariff and Private Line Service Tariff and facilities and equipment provided by AT&T shall be maintained by AT&T.

5.2 NuVox or its customers may not rearrange, move, disconnect, remove or attempt to repair any facilities owned by AT&T except with the written consent of AT&T.

5.3 To the extent known by appropriate personnel, NuVox will use best efforts to notify AT&T of situations that arise that may result in a service problem. AT&T will advise NuVox of any central office, facility, or network failure that is known at the time of any inquiry or trouble report by NuVox.

5.4 NuVox will contact the appropriate repair centers in accordance with procedures established in the BellSouth Operational Understanding Guide located at http://wholesale.att.com/reference_library/guides/html/other_guides.html.

5.5 For all repair requests, NuVox shall adhere to AT&T's prescreening guidelines prior to referring the trouble to AT&T as set forth in the BellSouth Operational Understanding Guide.

5.6 AT&T will bill NuVox for handling troubles that are found not to be in AT&T's network pursuant to its standard time and material charges. The standard time and material charges will be no more than what AT&T charges to its retail customers for handling troubles that are not found to be in AT&T's network.

5.7 AT&T reserves the right to contact NuVox's customers, if deemed necessary, for maintenance purposes.

6. Establishment of Account

6.1 Establishment of an account for resale will be done according to the terms of Section 1.2 of Attachment 7 to this Agreement.

7. Establishment of Service

7.1 AT&T will accept a request directly from the customer for conversion of the customer's service from NuVox to AT&T or will accept a request from another CLEC for conversion of the customer's service from NuVox to such other CLEC. Upon completion of the conversion AT&T will notify NuVox that such conversion has been completed.

8. Discontinuance of Service to Customers

8.1 The procedures for discontinuing service to an customer are as follows:

8.1.1 AT&T will deny service to NuVox's customer on behalf of, and at the request of, NuVox. Upon restoration of the customers' service, restoral charges will apply and will be the responsibility of NuVox.

8.1.2 At the request of NuVox, AT&T will disconnect a NuVox customer.

8.1.3 All requests by NuVox for denial or disconnection of a customer for nonpayment must be in writing.

8.1.4 NuVox will be made solely responsible for notifying the customer of the proposed disconnection of the service.

9. Discontinuance of Service to NuVox

9.1 Discontinuance of service to NuVox will be done according to the terms of Section 1.6 of Attachment 7 to this Agreement.

10. Operator Services (Operator Call Processing and Directory Assistance)

10.1 Operator Call Processing. Operator Call Processing provides: (1) operator handling for call completion (for example, collect, third number billing, and manual calling-card calls). (2) operator or automated assistance for billing after the customer has dialed the called number (for example, calling card calls); and (3) special services including but not limited to Busy Line Verification and Emergency Line Interrupt (ELI), Emergency Agency Call and Operator-assisted Directory Assistance.

10.2 Upon request for AT&T Operator Call Processing, AT&T shall:

10.2.1 Process 0+ and 0- dialed local calls

10.2.2 Process 0+ and 0- intraLATA toll calls.

10.2.3 Process calls that are billed to NuVox customer's calling card that can be validated by AT&T.

10.2.4 Process person-to-person calls.

10.2.5 Process collect calls.

10.2.6 Provide the capability for callers to bill a third party and shall also process such calls.

10.2.7 Process station-to-station calls.

10.2.8 Process Busy Line Verify and Emergency Line Interrupt requests.

10.2.9 Process emergency call trace originated by Public Safety Answering Points.

10.2.10 Process operator-assisted directory assistance calls.

10.2.11 Adhere to equal access requirements, providing NuVox local customers the same IXC access that AT&T provides its own operator service.

10.2.12 Exercise at least the same level of fraud control in providing Operator Service to NuVox that AT&T provides for its own operator service.

10.2.13 Perform Billed Number Screening when handling Collect, Person-to-Person, and Billed-To-Third-Party calls.

10.2.14 Direct customer account and other similar inquiries to the customer service center designated by NuVox.

10.2.15 Provide call records to NuVox in accordance with ODUF standards.

10.2.16 The interface requirements shall conform to the interface specifications for the platform used to provide Operator Services as long as the interface conforms to industry standards.

10.3 Directory Assistance Service

10.3.1 Directory Assistance Service provides local and non-local customer telephone number listings with the option to complete the call at the caller's direction separate and distinct from local switching.

10.3.2 Directory Assistance Service shall provide up to two listing requests per call, if available and if requested by NuVox's customer. AT&T shall provide caller-optional directory assistance call completion service at rates set forth in AT&T's General Subscriber Services Tariff to one of the provided listings.

10.4 Directory Assistance Service Updates

10.4.1 AT&T shall update customer listings changes daily. These changes include:

10.4.2 New customer connections

10.4.3 Customer disconnections

10.4.4 Customer address changes

10.4.5 These updates shall also be provided for non-listed and non-published numbers for use in emergencies.

10.5 Branding for Operator Call Processing and Directory Assistance

10.5.1 AT&T's branding feature provides a definable announcement to NuVox customers using Directory Assistance (DA)/ Operator Call Processing (OCP)

prior to placing such customers in queue or connecting them to an available operator or automated operator system. This feature allows NuVox's name on whose behalf AT&T is providing Directory Assistance and/or Operator Call Processing. Rates for the branding features are set forth in the Pricing Schedule.

10.5.2 AT&T offers three branding offering options to NuVox when ordering AT&T's Directory Assistance and Operator Call Processing: AT&T Branding, Unbranding and Custom Branding.

10.5.3 Upon receipt of the branding order from NuVox, the order is considered firm after ten (10) business days. Should NuVox decide to cancel the order, written notification to NuVox's AT&T Account Executive is required. If NuVox decides to cancel after ten (10) business days from receipt of the branding order, NuVox shall pay all charges per the order.

10.6 Selective Call Routing using Line Class Codes (SCR-LCC)

10.6.1 Where NuVox resells AT&T's services and utilizes an operator services provider other than AT&T, AT&T will route NuVox's customer calls to that provider through Selective Call Routing.

10.6.2 Selective Call Routing using Line Class Codes (SCR-LCC) provides the capability for NuVox to have its OCP/DA calls routed to AT&T's OCP/DA platform for AT&T provided Custom Branded or Unbranded OCP/DA or to its own or an alternate OCP/DA platform for Self-Branded OCP/DA. SCR-LCC is only available if line class code capacity is available in the requested AT&T end office switches.

10.6.3 Custom Branding for Directory Assistance is not available for certain classes of service, including but not limited to Hotel/Motel services, WATS service and certain PBX services.

10.6.4 Where available, NuVox specific and unique line class codes are programmed in each AT&T end office switch where NuVox intends to service customers with customized OCP/DA branding. The line class codes specifically identify NuVox's customers so OCP/DA calls can be routed over the appropriate trunk group to the request OCP/DA platform. Additional line class codes are required in each end office if the end office serves multiple NPAs (i.e., a unique LCC is required per NPA), and/or if the end office switch serves multiple rate areas and NuVox intends to provide NuVox branded OCP/DA to its customers in these multiple rate areas.

10.6.5 AT&T Branding is the default branding offering.

10.6.6 SCR-LCC supporting Custom Branding and Self Branding require NuVox to order dedicated transport and trunking from each AT&T end office identified by NuVox, either to the AT&T Traffic Operator Position System (TOPS) for Custom Branding or to the NuVox Operator Service Provider for Self Branding. Separate trunk groups are required for Operator Services and for Directory Assistance. Rates, terms and conditions for transport and trunks shall be in accordance with Section 4 of Attachment 3.

10.6.7 The rates for SCR-LCC are as set forth in the Pricing Schedule. There is a nonrecurring charge for the establishment of each Line Class Code in each AT&T central office.

10.6.8 Unbranded Directory Assistance and/or Operator Call Processing calls ride common trunk groups provisioned by AT&T from those end offices identified by NuVox to the AT&T Tops. The calls are routed to "No Announcement."

10.7 Branding via Originating Line Number Screening (OLNS)

10.7.1 AT&T Branding, Unbranding and Custom Branding are also available for Directory Assistance, Operator Call Processing or both via OLNS software. When utilizing this method of Unbranding or Custom Branding NuVox shall not be required to purchase direct trunking.

10.7.2 AT&T Branding is the default branding offering.

10.7.3 For AT&T to provide Unbranding or Custom Branding via OLNS software for Operator Call Processing or for Directory Assistance NuVox must have its Operating Company Number (OCN(s)) and telephone numbers reside in AT&T's LIDB; however, an AT&T LIDB Storage Agreement is not required. To Implement Unbranding and Custom Branding via OLNS software, NuVox must submit a manual order form which requires, among other things, NuVox's OCN and a forecast for the traffic volume anticipated for each AT&T TOPS during the peak busy hour. NuVox shall provide updates to such forecast on a quarterly basis and at any time such forecasted traffic volumes are expected to change significantly. Upon NuVox's purchase of Unbranding and Custom Branding using OLNS software for any particular TOPS, all NuVox customers served by that TOPS will receive the Unbranded "no announcement" or the Custom Branded announcement.

10.7.4 Rates for Unbranding and Custom Branding via OLNS software for Directory Assistance and for Operator Call Processing are as set forth in the Pricing Schedule. Notwithstanding anything to the contrary in this Agreement, to the extent AT&T is unable to bill NuVox applicable charges currently, AT&T shall track such charges and will bill the same retroactively at such time as a billing process is implemented. In addition to the charges for Unbranding and Custom

Branding via OLNS software, NuVox shall continue to pay AT&T applicable labor and other charges for the use of AT&T's Directory Assistance and Call Processing platforms as set forth in the Pricing Schedule.

10.7.5 Customized Branding includes charges for the recording of the branding announcement and the loading of the audio units in each TOPS Switch and Network Applications Vehicle (NAV) equipment for which NuVox requires service.

10.7.6 Directory Assistance customized branding uses:

10.7.6.1 the recording of NuVox

10.7.6.2 the loading of the recording in each switch.

10.7.7 Operator Call Processing customized branding uses:

10.7.7.1 the recording of NuVox

10.7.7.2 the loading of the recording in each switch.

10.7.7.3 the loading on the Network Applications Vehicle (NAV). All NAV shelves within the region where the customer is offering service must be loaded.

11. Line Information Database (LIDB)

11.1 AT&T will store in its Line Information Database (LIDB) records relating to service only in the AT&T region. The LIDB Storage Agreement is included in this Attachment as Exhibit B.

11.2 AT&T will provide LIDB Storage upon written request to NuVox's Account Manager stating a requested activation date.

12. RAO Hosting

12.1 RAO Hosting is not required for resale in the AT&T region.

13. Optional Daily Usage File (ODUF)

13.1 The Optional Daily Usage File (ODUF) Agreement with terms and conditions is included in this Attachment as Exhibit C. Rates for ODUF are as set forth in the Pricing Schedule.

13.2 AT&T will provide ODUF service upon written request to its Account Manager stating a requested activation date.

14. Enhanced Optional Daily Usage File (EODUF)

14.1 The Enhanced Optional Daily Usage File (EODUF) service Agreement with terms and conditions is included in this Attachment as Exhibit D. Rates for EODUF are as set forth in the Pricing Schedule.

14.2 AT&T will provide EODUF service upon written request to its Account Manager stating a requested activation date.

EXCLUSIONS AND LIMITATIONS ON SERVICES AVAILABLE FOR RESALE (Note 3)

	Type of Service	AL		FL		GA		KY		LA		MS		NC		SC		TN	
		Resale	Discount	Resale	Discount	Resale	Discount	Resale	Discount	Resale	Discount	Resale	Discount	Resale	Discount	Resale	Discount	Resale	Discount
1	Grandfathered Services (Note 1)	Yes	Yes	Yes	Yes	Yes	Yes	Yes	Yes	Yes	Yes	Yes	Yes	Yes	Yes	Yes	Yes	Yes	Yes
2	Promotions - > 90 Days(Note 2)	Yes	Yes	Yes	Yes	Yes	Yes	Yes	Yes	Yes	Yes	Yes	Yes	Yes	Yes	Yes	Yes	Yes	Yes
3	Promotions - ≤ 90 Days (Note 2)	Yes	No	Yes	No	Yes	No	Yes	No	Yes	No	Yes	No	Yes	No	Yes	No	Yes	No
4	Lifeline/Link Up Services	Yes	Yes	Yes	Yes	Yes	Yes	No	No	Yes	Yes	Yes	Yes	Yes	Yes	Yes	Yes	Yes	Yes
5	911/E911 Services	Yes	Yes	Yes	Yes	Yes	Yes	Yes	Yes	No	No	Yes	Yes	Yes	Yes	Yes	Yes	Yes	Yes
6	N11 Services	Yes	Yes	Yes	Yes	Yes	Yes	No	No	No	No	Yes	Yes	Yes	Yes	No	No	Yes	Yes
7	MemoryCall®Service	Yes	No	Yes	No	Yes	No	Yes	No	Yes	No	Yes	No	Yes	No	Yes	No	Yes	No
8	Mobile Services	Yes	No	Yes	No	Yes	No	Yes	No	Yes	No	Yes	No	Yes	No	Yes	No	Yes	No
9	Federal Subscriber Line Charges	Yes	No	Yes	No	Yes	No	Yes	No	Yes	No	Yes	No	Yes	No	Yes	No	Yes	No
10	Non-RecurCharges	Yes	Yes	Yes	Yes	Yes	Yes	Yes	Yes	Yes	Yes	Yes	Yes	Yes	Yes	Yes	Yes	Yes	No
11	Customer Line Chg-Number Portability	Yes	No	Yes	No	Yes	No	Yes	No	Yes	No	Yes	No	Yes	No	Yes	No	Yes	No
12	Public Telephone Access Svc(PTAS)	Yes	Yes	Yes	Yes	Yes	Yes	Yes	Yes	Yes	Yes	Yes	Yes	Yes	Yes	Yes	No	Yes	Yes
13	Inside Wire Maint Service Plan	Yes	No	Yes	No	Yes	No	Yes	No	Yes	No	Yes	No	Yes	No	Yes	No	Yes	No

	Applicable Notes:
1.	**Grandfathered services** can be resold only to existing subscribers of the grandfathered service.
2.	Where available for resale, **promotions** will be made available only to customers who would have qualified for the promotion had it been provided by AT&T directly.
3.	Some of AT&T's local exchange and toll telecommunications services are not available in certain central offices and areas.

LINE INFORMATION DATA BASE (LIDB)

RESALE STORAGE AGREEMENT

I. Definitions (from Addendum)

A. Billing number - a number used by AT&T for the purpose of identifying an account liable for charges. This number may be a line or a special billing number.

B. Line number - a ten-digit number assigned by AT&T that identifies a telephone line associated with a resold local exchange service.

C. Special billing number - a ten-digit number that identifies a billing account established by AT&T in connection with a resold local exchange service.

D. Calling Card number - a billing number plus PIN number assigned by AT&T.

E. PIN number - a four-digit security code assigned by AT&T that is added to a billing number to compose a fourteen-digit calling card number.

F. Toll billing exception indicator - associated with a billing number to indicate that it is considered invalid for billing of collect calls or third number calls or both, by NuVox.

G. Billed Number Screening - refers to the query service used to determine whether a toll billing exception indicator is present for a particular billing number.

H. Calling Card Validation - refers to the query service used to determine whether a particular calling card number exists as stated or otherwise provided by a caller.

I. Billing number information - information about billing number or Calling Card number as assigned by AT&T and toll billing exception indicator provided to AT&T by NuVox.

J. Get-Data - refers to the query service used to determine, at a minimum, the Account Owner and/or Regional Accounting Office for a line number. This query service may be modified to provide additional information in the future.

K. Originating Line Number Screening (OLNS) - refers to the query service used to determine the billing, screening and call handling indicators, station type and Account Owner provided to AT&T by NuVox for originating line numbers.

L. Account Owner - name of the local exchange telecommunications company that is providing dialtone on a subscriber line.

II. General

A. This Agreement sets forth the terms and conditions pursuant to which AT&T agrees to store in its LIDB certain information at the request of NuVox and pursuant to which AT&T, its LIDB customers and NuVox shall have access to such information. In addition, this Agreement sets forth the terms and conditions for NuVox's provision of billing number information to AT&T for inclusion in AT&T's LIDB. NuVox understands that AT&T provides access to information in its LIDB to various telecommunications service providers pursuant to applicable tariffs and agrees that information stored at the request of NuVox, pursuant to this Agreement, shall be available to those telecommunications service providers. The terms and conditions contained herein shall hereby be made a part of this Agreement upon notice to NuVox's account team and/or Local Contract Manager to activate this LIDB Storage Agreement. The General Terms and Conditions of the Agreement shall govern this LIDB Storage Agreement.

B. AT&T will provide responses to on-line, call-by-call queries to billing number information for the following purposes:

1. Billed Number Screening

   AT&T is authorized to use the billing number information to determine whether NuVox has identified the billing number as one that should not be billed for collect or third number calls.

2. Calling Card Validation

   AT&T is authorized to validate a 14-digit Calling Card number where the first 10 digits are a line number or special billing number assigned by AT&T, and where the last four digits (PIN) are a security code assigned by AT&T.

3. OLNS

   AT&T is authorized to provide originating line screening information for billing services restrictions, station type, call handling indicators, presubscribed interLATA and local carrier and account owner on the lines of NuVox from which a call originates.

4. GetData

   AT&T is authorized to provide, at a minimum, the account owner and/or Regional Accounting Office information on the lines of NuVox indicating the local service provider and where billing records are to be sent for settlement purposes. This query service may be modified to provide additional information in the future.

5. Fraud Control

AT&T will provide seven days per week, 24-hours per day, fraud monitoring on Calling Cards, bill-to-third and collect calls made to numbers in AT&T's LIDB, provided that such information is included in the LIDB query. AT&T will establish fraud alert thresholds and will notify NuVox of fraud alerts so that NuVox may take action it deems appropriate.

III. Responsibilities of the Parties

A. AT&T will administer all data stored in the LIDB, including the data provided by NuVox pursuant to this Agreement, in the same manner as AT&T's data for AT&T's customer customers. AT&T shall not be responsible to NuVox for any lost revenue which may result from AT&T's administration of the LIDB pursuant to its established practices and procedures as they exist and as they may be changed by AT&T in its sole discretion from time to time.

B. Billing and Collection Customers

AT&T currently has in effect numerous billing and collection agreements with various interexchange carriers and billing clearing houses and as such these billing and collection customers (B&C Customers) query AT&T's LIDB to determine whether to accept various billing options from customers. Until such time as AT&T implements in its LIDB and its supporting systems the means to differentiate NuVox's data from AT&T's data, the following shall apply:

(1) AT&T will identify NuVox customer originated long distance charges and will return those charges to the interexchange carrier as not covered by the existing B&C agreement. NuVox is responsible for entering into the appropriate agreement with interexchange carriers for handling of long distance charges by their customers.

(2) AT&T shall have no obligation to become involved in any disputes between NuVox and B&C Customers. AT&T will not issue adjustments for charges billed on behalf of any B&C Customer to NuVox. It shall be the responsibility of NuVox and the B&C Customers to negotiate and arrange for any appropriate adjustments.

IV. Fees for Service and Taxes

A. NuVox will not be charged a fee for storage services provided by AT&T to NuVox, as described in this LIDB Resale Storage Agreement.

B. Sales, use and all other taxes (excluding taxes on AT&T's income) determined by AT&T or any taxing authority to be due to any federal, state or local taxing jurisdiction with respect to the provision of the service set forth herein will be paid by NuVox in accordance with the tax provisions set forth in the General Terms and Conditions of this Agreement.

Optional Daily Usage File

1. Upon written request from NuVox, AT&T will provide the Optional Daily Usage File (ODUF) service to NuVox pursuant to the terms and conditions set forth in this section. ODUF data delivery accuracy, completeness, timeliness and mean time to deliver will be in accordance with SQMs B3, B4, B5 and B6.

2. NuVox shall furnish all relevant information required by AT&T for the provision of the ODUF.

3. The ODUF feed will contain messages that were carried over the AT&T Network and processed in the AT&T Billing System, but billed to a NuVox customer.

4. Charges for ODUF will appear on NuVox's monthly bills for the previous month's usage. The charges are as set forth in the Pricing Schedule. NuVox will be billed at the ODUF rates that are in effect at the end of the previous month.

5. The ODUF feed will contain both rated and unrated messages. All messages will be in the standard Alliance for Telecommunications Industry Solutions (ATIS) EMI record format.

6. Messages that error in the billing system of NuVox will be the responsibility of NuVox. If, however, NuVox should encounter significant volumes of errored messages that prevent processing by NuVox within its systems, AT&T will work with NuVox to determine the source of the errors and the appropriate resolution. Upon request from NuVox, AT&T shall resend errored messages in accordance with SQM B-9.

6.1 The following specifications shall apply to the ODUF feed.

ODUF Message to be Transmitted

6.1.1 The following messages recorded by AT&T will be transmitted to NuVox:

- Message recording for per use/per activation type services (examples: Three Way Calling, Verify, Interrupt, Call Return, etc.)
- Measured Local
- Directory Assistance messages
- IntraLATA Toll
- WATS and 800 Service
- N11

- Information Service Provider Messages
- Operator Services Messages
- Operator Services Message Attempted Calls (Network Element only)
- Credit/Cancel Records
- Usage for Voice Mail Message Service

6.1.2 Rated Incollects (messages AT&T receives from other revenue accounting companies) can also be on ODUF. Rated Incollects will be intermingled with AT&T recorded rated and unrated usage. Rated Incollects will not be packed separately.

6.1.3 AT&T will perform duplicate record checks on records processed to ODUF. Any duplicate messages detected will be deleted and not sent to NuVox.

6.1.4 In the event that NuVox detects a duplicate on ODUF they receive from AT&T, NuVox will drop the duplicate message and will not return the duplicate to AT&T).

6.2 ODUF Physical File Characteristics

6.2.1 ODUF will be distributed to NuVox via CONNECT:Direct, Connect: Enterprise Client or another mutually agreed medium. The ODUF feed will be a variable block format. The data on the ODUF feed will be in a non-compacted EMI format (175 byte format plus modules). It will be created on a daily basis Monday through Friday except holidays. Details such as dataset name and delivery schedule will be addressed during negotiations of the distribution medium. There will be a maximum of one dataset per workday per OCN.

6.2.2 Data circuits (private line or dial-up) will be required between AT&T and NuVox for the purpose of data transmission when utilizing CONNECT:Direct. Where a dedicated line is required, NuVox will be responsible for ordering the circuit, and coordinating the installation with AT&T. NuVox will also be responsible for any charges associated with this line. CSU/DSU equipment required on the AT&T end to attach the line to the mainframe computer and to transmit data will be the responsibility of NuVox. Where a dial-up facility is required, dial circuits will be installed in the AT&T data center by AT&T and the associated charges assessed to NuVox. Additionally, all message toll charges associated with the use of the dial circuit by NuVox will be the responsibility of NuVox. Associated equipment on the AT&T end, including a modem, will be the responsibility of AT&T. All equipment, including modems and software, that is required on NuVox end for the purpose of data transmission will be the responsibility of NuVox.

6.2.3 If NuVox utilizes CONNECT:Enterprise Client for data file transmission, purchase of the CONNECT:Enterprise Client software will be the responsibility of NuVox.

6.3 ODUF Packing Specifications

6.3.1 A pack will contain a minimum of one (1) message record or a maximum of ninety-nine thousand nine hundred and ninety-nine (99,999) message records plus a pack header record and a pack trailer record. One transmission can contain a maximum of ninety-nine (99) packs and a minimum of one (1) pack.

6.3.2 The OCN, From RAO, and Invoice Number will control the invoice sequencing. The From RAO will be used to identify to NuVox which AT&T RAO that is sending the message. AT&T and NuVox will use the invoice sequencing to control data exchange. AT&T will be notified of sequence failures identified by NuVox and resend the data as quickly as technically possible.

The data will be packed using ATIS EMI records.

6.4 ODUF Pack Rejection

6.4.1 NuVox will notify AT&T within one (1) business day of rejected packs (via the mutually agreed medium). Packs could be rejected because of pack sequencing discrepancies or a critical edit failure on the Pack Header or Pack Trailer records (i.e. out-of-balance condition on grand totals, invalid data populated). Standard ATIS EMI Error Codes will be used. NuVox will not be required to return the actual rejected data to AT&T. Rejected packs will be corrected and retransmitted to NuVox by AT&T.

6.5 ODUF Control Data

NuVox will send one (1) confirmation record per pack that is received from AT&T. This confirmation record will indicate NuVox's receipt of the pack and acceptance or rejection of the pack. Pack Status Code(s) will be populated using standard ATIS EMI error codes for packs that were rejected by NuVox for reasons stated in the above section.

6.6 ODUF Testing

6.6.1 Upon request from NuVox, AT&T shall send ODUF test files to NuVox. The Parties agree to review and discuss the ODUF content and/or format. For testing of usage results, AT&T shall request that NuVox set up a production (live) file. The live test may consist of NuVox's employees making test calls for the types of services NuVox requests on ODUF. These test calls are logged by NuVox, and the logs are provided to AT&T. These logs will be used to verify the files. Testing will be completed within thirty (30) calendar days from the date on which the initial test file was sent.

Enhanced Optional Daily Usage File

1. Upon written request from NuVox, AT&T will provide the Enhanced Optional Daily Usage File (EODUF) service to NuVox pursuant to the terms and conditions set forth in this section. EODUF will only be sent to existing ODUF subscribers who request the EODUF option.

2. NuVox shall furnish all relevant information required by AT&T for the provision of the EODUF.

3. The EODUF will provide usage data for local calls originating from resold Flat Rate Business and Residential Lines.

4. Charges for delivery of the EODUF will appear on NuVox's monthly bills for the previous month's usage. The charges are as set forth in the Pricing Schedule. NuVox will be billed at the EODUF rates that are in effect at the end of the previous month.

5. All messages will be in the standard Alliance for Telecommunications Industry Solutions (ATIS) EMI record format.

6. Messages that error in the billing system of NuVox will be the responsibility of NuVox. If, however, NuVox should encounter significant volumes of errored messages that prevent processing by NuVox within its systems, AT&T will work with NuVox to determine the source of the errors and the appropriate resolution. Upon request from NuVox, AT&T shall resend errored messages as required by SQM B-9.

7. The following specifications shall apply to the EODUF feed.

7.1 Usage To Be Transmitted

7.1.1 The following messages recorded by AT&T will be transmitted to NuVox:

Customer usage data for flat rated local call originating from NuVox's customer lines (1FB or 1FR). The EODUF record for flat rate messages will include:

Date of Call

From Number

To Number

Connect Time

Conversation Time

Method of Recording

From RAO

Rate Class

Message Type

Billing Indicators

Bill to Number

7.1.2 AT&T will perform duplicate record checks on EODUF records processed to ODUF. Any duplicate messages detected will be deleted and not sent to NuVox.

7.1.3 In the event that NuVox detects a duplicate on EODUF they receive from AT&T, NuVox will drop the duplicate message (NuVox will not return the duplicate to AT&T).

7.2 Physical File Characteristics

7.2.1 The EODUF feed will be distributed to NuVox over their existing ODUF feed. The EODUF messages will be intermingled among NuVox's ODUF messages. The EODUF will be a variable block format (2476) with a LRECL of 2472. The data on the EODUF will be in a non-compacted EMI format (175 byte format plus modules). It will be created on a daily basis (Monday through Friday except holidays).

7.2.2 Data circuits (private line or dial-up) may be required between AT&T and NuVox for the purpose of data transmission as set forth in Section 6.2.2 above.

7.2.3 Data circuits (private line or dial-up) will be required between AT&T and NuVox for the purpose of data transmission when utilizing CONNECT:Direct. Where a dedicated line is required, NuVox will be responsible for ordering the circuit, and coordinating the installation with AT&T. NuVox will also be responsible for any charges associated with this line. CSU/DSU equipment required on the AT&T end to attach the line to the mainframe computer and to transmit data will be the responsibility of NuVox. Where a dial-up facility is required, dial circuits will be installed in the AT&T data center by AT&T and the associated charges assessed to NuVox. Additionally, all message toll charges associated with the use of the dial circuit by NuVox will be the responsibility of NuVox. Associated equipment on the AT&T end, including a modem, will be the responsibility of AT&T. All equipment, including modems and software, that is required on NuVox end for the purpose of data transmission will be the responsibility of NuVox.

7.3 Packing Specifications

7.3.1 A pack will contain a minimum of one (1) message record or a maximum of ninety-nine thousand nine hundred ninety-nine (99,999) message records plus a pack header

record and a pack trailer record. One (1) transmission can contain a maximum of ninety-nine (99) packs and a minimum of one (1) pack.

7.3.2 The OCN, From (RAO), and Invoice Number will control the invoice sequencing. The From RAO will be used to identify to NuVox which AT&T RAO is sending the message. AT&T and NuVox will use the invoice sequencing to control data exchange. AT&T will be notified of sequence failures identified by NuVox and resend the data as quickly as technically possible.

7.3.3 The data will be packed using ATIS EMI Records.

Attachment 2

Network Elements and Other Services

TABLE OF CONTENTS

1 GENERAL 3

2 LOOPS 8

3 LINE SPLITTING 36

4 LOCAL SWITCHING AND UNE-P 38

5 UNBUNDLED NETWORK ELEMENT COMBINATIONS 38

6 DEDICATED TRANSPORT AND DARK FIBER TRANSPORT 42

7 AUTOMATIC LOCATION IDENTIFICATION/DATA MANAGEMENT SYSTEM (ALI/DMS) 56

8 OPERATIONAL SUPPPORT SYSTEMS (OSS) 59

Initial Wire Center List……..……..Exhibit A

ACCESS TO NETWORK ELEMENTS AND OTHER SERVICES

1. General

1.1 This Attachment sets forth rates, terms and conditions for Unbundled Network Elements (UNEs) and combinations of UNEs with other UNEs (Combinations) that AT&T shall offer to NuVox in accordance with its obligations under Section 251(c)(3) of the Act. Additionally, this Attachment sets forth rates, terms and conditions for other facilities and services AT&T makes available to NuVox (Other Services). The rates for each UNE, Combination and Other Service are set forth in the Pricing Schedule. In providing access or obtaining access to UNEs, Combinations and Other Services, the Parties shall comply with all applicable FCC rules and orders and Commission rules and orders.

1.1.1 Network Element is as defined in the FCC's rules**.**

1.1.2 Business Line. For purposes of this Attachment, a "Business Line" is, as defined in 47 C.F.R. § 51.5.

1.1.3 Fiber-Based Collocator. For purposes of this Attachment, a "Fiber-Based Collocator" is, as defined in 47 C.F.R. § 51.5. For purposes of this definition: (i) carriers that have entered into merger and/or other consolidation agreements, or otherwise announced their intention to enter into the same, will be treated as affiliates and therefore as one collocator; provided, however, in the case one of the parties to such merger or consolidation arrangement is AT&T, then the other party's collocation arrangement shall not be counted as a Fiber-Based Collocator; (ii) a "comparable transmission facility" means, at minimum, the provision of transmission capacity equivalent to fiber-optic cable with a minimum point-to-point symmetrical data capacity exceeding 12 DS3s; (iii) the network of a Fiber-Based Collocator may only be counted once in making a determination of the number of Fiber-Based Collocators, notwithstanding that such single Fiber-Based Collocator leases its facilities to other collocators in a single wire center; provided, however, that a collocating carrier's dark fiber leased from an unaffiliated carrier may only be counted as a separate fiber-optic cable from the unaffiliated carrier's fiber if the collocating carrier obtains this dark fiber on an IRU basis.

1.1.4 Building. For purposes of this Attachment, a "Building" shall be defined on a case-by-case basis, and in the context of the actual facts involved in any dispute arising hereunder. The Parties agree to resolve any dispute regarding the proper definition of "Building" in a dispute resolution proceeding before the Commission, in accordance with the General Terms and Conditions of the Agreement.

1.1.5 Route. For purposes of this Attachment, a "Route" is as defined in 47 C.F.R. § 51.319(e).

1.1.6 Technically Feasible is as defined in the FCC's rules.

1.1.7 UNE is defined to mean the Network Elements that AT&T is required to make available on an unbundled basis by the FCC or Commission pursuant to Section 251(c)(3) of the Act and FCC and Commission rules and orders that are set forth in this Attachment.

1.2 AT&T shall provide and NuVox may access UNEs and Other Services in accordance with all applicable FCC and Commission rules and orders, including but not limited to: 47 C.F.R 51.307, 51.309, 51.311, 51.313, 51.315, 51.316, 51.318, 51.319.

1.3 AT&T shall comply with the requirements set forth in the technical references identified in this Attachment. Such requirements shall be applied in a non-discriminatory manner and at parity and shall be in accord with all FCC and Commission requirements.

1.4 Consistent with Section1.2 above, NuVox shall not obtain a Network Element for the exclusive provision of mobile wireless services or interexchange services.

1.5 Conversion of Wholesale Services to Network Elements or Network Elements to Wholesale Services

1.5.1 Upon request, AT&T shall convert a wholesale service, or group of wholesale services, to the equivalent UNE or Combination, and shall convert a UNE or Combination to an equivalent wholesale service or group of wholesale services offered in accordance with 47 C.F.R. § 51.316 (collectively "Conversion"). The nonrecurring switch-as-is rates for such Conversions are contained in the Pricing Schedule. **C**onversions shall be considered termination for purposes of any volume and/or term commitments and/or grandfathered status applicable to such converted services. Any change from a wholesale service/group of wholesale services to a UNE/Combination, or from a UNE/Combination to a wholesale service/group of wholesale services, that requires a physical rearrangement of the UNE/Combination or wholesale service/group of wholesale services will not be considered to be a Conversion for purposes of this Attachment. For arrangements that require a re-termination or other physical rearrangement of circuits to comply with the terms of the Agreement, nonrecurring charges for the UNE or Combination or cross connect from the Pricing Schedule will apply. For arrangements that require a re-termination or other physical rearrangement of circuits to comply with the terms of the tariff or contract governing the wholesale service(s), nonrecurring charges for the wholesale service/wholesale services from such tariff or contract will apply. AT&T will not require physical rearrangements if the Conversion can be completed through record changes only.

1.5.2 Any price change resulting from the Conversion will be effective as of the next billing cycle following AT&T's receipt of a complete and accurate Conversion request from NuVox. The fact that the Parties have agreed to this Section 1.5.2 shall not be used by either Party against the other in any dispute raised prior to the Effective Date of this Attachment regarding the effective date for billing changes resulting from a Conversion; provided, however, that this provision does not preclude either Party from making any arguments based on the FCC's decision in the TRO in any such dispute.

1.5.3 If NuVox wants to convert a UNE or Combination (or part thereof) to wholesale services NuVox shall submit a spreadsheet (and a commingling ordering document that indicates which part is to be filled as a UNE, if applicable). AT&T shall charge NuVox the same nonrecurring switch-as-is charge found in the Pricing Schedule for the Conversion of a single UNE as it does for a Combination.

1.6 Transition of UNEs to Other Services

1.6.1 Except to the extent expressly provided otherwise in this Attachment, NuVox may not maintain any UNE or Combination that is no longer offered pursuant to the Agreement (collectively "Arrangements"). In the event AT&T determines that NuVox has in place any Arrangements after the Effective Date of this Agreement, AT&T will provide NuVox with thirty (30) days written notice to disconnect or convert such Arrangements. If NuVox fails to submit orders to disconnect or convert such Arrangements within such thirty (30) day period, AT&T will transition such facilities to the equivalent tariffed AT&T service. Those facilities identified and transitioned by AT&T pursuant to this Section 1.6 shall be subject to all applicable disconnect charges as set forth in the Agreement and the full nonrecurring charges for installation of the equivalent tariffed AT&T service, as set forth in AT&T's tariffs. The applicable recurring charge shall apply to each facility as of the Effective Date of this Agreement.

1.7 Self Certification for DS1 and DS3 loops and DS1, DS3, and Dark Fiber Transport

1.7.1 Prior to submitting an order pursuant to the Agreement for high capacity (DS1 or above) Dedicated Transport or high capacity (DS1 or above) Loops, NuVox shall undertake a reasonably diligent inquiry to determine whether NuVox is entitled to unbundled access to such Section 251 Network Elements in accordance with the terms of the Agreement. By submitting any such order, NuVox self-certifies that to the best of NuVox's knowledge, the high capacity Dedicated Transport or high capacity Loop requested is available as a Section 251 Network Element pursuant to the Agreement. Upon receiving such order, AT&T shall process the request in reliance upon NuVox's self-certification. To the extent AT&T believes that such request does not comply with the terms of the Agreement, AT&T shall seek

dispute resolution in accordance with the General Terms and Conditions of the Agreement. In the event such dispute is resolved in AT&T's favor, AT&T shall bill NuVox the difference between the rates for such circuits pursuant to the Agreement and the applicable nonrecurring and recurring charges for the equivalent tariffed service from the date of installation to the date the circuit is transitioned to the equivalent tariffed service. Within thirty (30) days following a decision finding in AT&T's favor, NuVox shall submit a spreadsheet identifying those non-compliant circuits to be transitioned to tariffed services or disconnected.

1.7.2 In the event that (1) AT&T designates a wire center as non-impaired, (2) NuVox converts existing UNEs to other services or orders new services as services other than UNEs, (3) NuVox otherwise would have been entitled to UNEs in such wire center at the time alternative services provisioned, and (4) AT&T acknowledges or a state or federal agency regulatory body with authority determines that, at the time AT&T designated such wire center as non-impaired, such wire center did not meet the FCC's non-impairment criteria, then upon request of NuVox, AT&T shall transition to UNEs any alternative services in such wire center that were established after such wire center was designated as non-impaired. In such instances, AT&T shall refund NuVox the difference between the rate paid by NuVox for such services and the applicable UNE rate, including but not limited to any charges associated with the unnecessary conversion from UNE to other wholesale services.

1.7.3 NuVox may utilize UNEs and Other Services in a manner consistent with applicable industry standards and applicable AT&T Technical References incorporated into AT&T's Reference Library found on AT&T's CLEC Online website at https://clec.att.com/clec. In the event that NuVox perceives that AT&T Technical References include provisions that unreasonably limit NuVox's ability to access and utilize UNEs in accordance with this Attachment, NuVox shall notify AT&T and the Parties shall attempt to resolve the issue. If the Parties are unable to resolve the issue, the dispute shall be handled in accordance with the dispute resolution provisions in Section 13 of the General Terms and Conditions of this Agreement.

1.8 Routine Network Modifications (RNMs)

1.8.1 AT&T will perform RNMs in accordance with FCC 47 C.F.R. § 51.319 (a)(7) and (e)(4). Except to the extent expressly provided otherwise in this Attachment, if AT&T has anticipated such RNMs and performs them during normal operations and such function was included in AT&T's cost studies that, through Commission proceedings or agreement by the Parties resulted in rates set forth in the Pricing Schedule, then AT&T shall perform such RNMs at no additional charge. RNMs shall be performed within the intervals established for the UNE and subject to the performance measurements and associated remedies set forth in

Attachment 9 to the extent such RNMs were anticipated in the setting of such intervals. If AT&T has not anticipated a requested network modification as being a RNM and has not recovered the costs of such RNM in the rates set forth in the Pricing Schedule, then NuVox must submit a LSR to have the work performed. Each request will be handled as a project on an individual case basis until such time as AT&T incorporates such RNM into its normal operations and develops a charge for such RNM that is included in the Agreement by amendment thereto. If NuVox believes that a RNM should be incorporated into AT&T's normal operations and AT&T disagrees with such determination, the dispute shall be resolved pursuant to the resolution of disputes provision of the General Terms and Conditions. AT&T will provide a price quote for the request, and upon receipt of payment from NuVox, AT&T shall perform the RNM. If NuVox believes that AT&T's firm price quote is not consistent with the requirements of the Act, either Party may seek dispute resolution in accordance with the dispute resolution provisions set forth in the General Terms and Conditions of the Agreement. While the dispute is pending, NuVox shall have the option of requesting AT&T to perform the RNM subject to a retroactive pricing true-up upon an effective Commission order resolving the dispute. The Parties agree that subsequent true-ups may result from multiple rounds of appellate or reconsideration decisions, should the relevant Party pursue such appeals/reconsiderations/review and prevail. AT&T will provide a cost study upon request after the firm quote.

1.9 Commingling

1.9.1 Commingling means the connecting, attaching, or otherwise linking of a UNE, or a Combination, to one or more Telecommunications Services or facilities that NuVox has obtained at wholesale from AT&T, or the combining of a UNE or Combination with one or more such wholesale Telecommunications Services or facilities.

1.9.2 AT&T shall provide commingling of services in accordance with 47 C.F.R. § 51.309.

1.9.3 AT&T shall permit NuVox to commingle a UNE or Combination obtained pursuant to Section 251 of the Act with one (1) or more facilities that NuVox has obtained at wholesale from AT&T, pursuant to a method other than unbundling under Section 251(c)(3) of the Act; provided, however, that AT&T will not commingle Section 251 UNEs or Combinations with any service, Network Element or other offering that it is obligated to make available only pursuant to Section 271 of the Act. Nothing in this Section 1.9.3 shall prevent NuVox from commingling UNEs with tariffed special access loops and transport services.

1.9.4 Subject to the limitations set forth elsewhere in this Attachment, AT&T shall not deny access to a UNE or a Combination on the grounds that one or more of the elements: 1) is connected to, attached to, linked to, or combined with such a

facility or service obtained from AT&T; or 2) shares part of AT&T's network with access services or inputs for mobile wireless services and/or interexchange services.

1.9.5 Unless otherwise agreed to by the Parties, the UNE portion of a commingled facility will be billed at the rates set forth in the Pricing Schedule, and the remainder of the facility or service will be billed in accordance with AT&T's tariffed rates, or the rates set forth by separate agreement.

1.9.6 When multiplexing equipment is attached to a commingled arrangement, the multiplexing equipment will be billed from the same jurisdictional authorization (agreement or the tariff) as the higher bandwidth service. The Central Office Channel Interfaces (COCI) will be billed from the same jurisdictional authorization (agreement or tariff) as the lower bandwidth service.

1.10 Rates

1.10.1 The prices that NuVox shall pay to AT&T for UNEs, Combinations and Other Services are set forth in the Pricing Schedule. To the extent a rate is required to be TELRIC-compliant, the rate in the Pricing Schedule shall be TELRIC-compliant, and if Commission approved, is the Commission approved rates. If NuVox purchases a service(s) from a tariff, all terms and conditions and rates as set forth in such tariff shall apply. If no rate is identified in this Agreement for an UNE, Combination or Other Service that is required to be a TELRIC-compliant rate, the rate will be a TELRIC-compliant rate set by the Commission, or if no such rate has been set by a Commission, AT&T shall propose an interim TELRIC-compliant rate based upon a cost study that AT&T will provide upon request from NuVox. If the rate is not required to be TELRIC-compliant, then the rate may be negotiated by the Parties upon request by either Party. If the Parties are unable to agree upon a rate, either Party may pursue dispute resolution.

1.10.2 Rates, terms and conditions for order cancellation charges and Service Date Advancement Charges will apply in accordance with Attachment 6. Service Date Advancement charges for expediting UNEs and Other Services orders and are as set forth in the Pricing Schedule.

1.10.3 If NuVox modifies an order (Order Modification Charge (OMC)) after being sent a Firm Order Confirmation (FOC) from AT&T, any costs incurred by AT&T to accommodate the modification will be paid by NuVox in accordance with FCC No. 1 Tariff, Section 5.

1.10.4 Fractionalized billing shall apply to all UNEs and Combinations such that recurring charges will be prorated based upon the number of days that the UNEs are in service. Non-recurring charges shall not be fractionalized.

2. Loops

2.1 General

2.1.1 AT&T shall provide NuVox with nondiscriminatory access to the local loop on an unbundled basis, in accordance with FCC 47 C.F.R. 51.319(a). The various loops that AT&T currently offers and is required to make available are set forth herein.

2.1.1.1 For the purposes of this Agreement, and not by way of limitation, the phrase "end user customer premises" as used in 47 C.F.R. 51.319(a) shall not be interpreted to include such places as a carrier's mobile switching center, base station, cell site, or other similar facility, except to the extent that a carrier may require loops to such locations for the purpose of providing telecommunications services to its personnel at those locations.

2.1.2 When NuVox is purchasing a loop, NuVox shall purchase the entire bandwidth of the loop and, except as required herein or as otherwise agreed to by the Parties, AT&T shall not subdivide the frequency of the loop.

2.1.2.1 The loop shall include the use of all test access functionality, including without limitation, smart jacks, for both voice and data.

2.1.3 The provisioning of a loop to NuVox's collocation space will require AT&T to provide cross office cabling and cross connections within the central office to connect the loop to the demarcation point associated with the collocation space. These cross connects are separate components that are not considered a part of the loop, and thus, have a separate charge as set forth in the Pricing Schedule.

2.1.4 Where facilities are available, AT&T will install loops in compliance with AT&T's Unbundled Network Elements Guides available at the website at AT&T's CLEC Online website. For orders of fifteen (15) or more loops, the installation and any applicable Order Coordination as described below will be handled on a project basis, and reasonable and nondiscriminatory intervals will be set by the AT&T project manager for that order. When loops require a Service Inquiry (SI) prior to issuing the order to determine if facilities are available, the interval for the SI process is separate from the installation interval.

2.1.5 The loop shall be provided to NuVox in accordance with reasonable and nondiscriminatory provisions set forth in AT&T's TR-73600 Unbundled Local Loop - Technical Specifications and applicable industry standard technical references.

2.1.6 AT&T will provision, maintain and repair the loops to the standards that are consistent with the type of loop ordered.

2.1.7 When an AT&T technician is required to be dispatched to provision the loop, AT&T will tag the loop with the Circuit ID number and the name of the ordering CLEC. When a dispatch is not required to provision the loop, AT&T will tag the loop on the next required visit to the customer's location. If NuVox wants to ensure the loop is tagged during the provisioning process for loops that may not require a dispatch (e.g., UVL-SL1, UVL-SL2, and UCL-ND), NuVox may order loop tagging. Rates for loop tagging are as set forth in the Pricing Schedule.

2.2 Transition for Certain DS1 and DS3 Loops

2.2.1 For purposes of this Section 2.2, the Transition Period for the Embedded Base of DS1 and DS3 Loops and for the Excess DS1 and DS3 Loops (defined in Section 2.2.3) is the twelve (12) month period beginning March 11, 2005 and ending March 10, 2006.

2.2.2 For purposes of this Section 2.2, Embedded Base means DS1 and DS3 Loops that were in service for NuVox as of March 11, 2005 in those wire centers that the Commission determined in Docket No. 2004-316-C met the criteria set forth in Sections 2.2.4.1 and 2.2.4.2 below. For the State of South Carolina, during the Transition Period, NuVox shall be entitled to order and AT&T shall provision moves, changes and additions of DS1 and DS3 Loops that NuVox orders for the purpose of serving its existing DS1 and DS3 Loop customers as of March 10, 2005, at such customers' new or existing physical locations, and such facilities shall be included in the Embedded Base. Subsequent disconnects or loss of customers shall be removed from the Embedded Base.

2.2.3 Excess DS1 and DS3 Loops are those NuVox DS1 and DS3 Loops in service as of March 11, 2005, in excess of the caps set forth in Section 2.2.3.1 below. Subsequent disconnects or loss of customers shall be removed from Excess DS1 and DS3 Loops.

2.2.3.1 AT&T shall not provide more than ten (10) unbundled Section 251 DS1 Loops to NuVox at any single Building in which DS1 Loops are available as Section 251 Loops. NuVox may obtain a maximum of a single Section 251 DS3 Loop to any single Building in which DS3 Loops are available as Section 251 Loops.

2.2.4 Notwithstanding anything to the contrary in this Agreement, and except as set forth in Section 2.3 below, AT&T shall make available DS1 and DS3 Loops meeting the following thresholds for NuVox's Embedded Base, and Excess DS1 and DS3 loops during the Transition Period:

2.2.4.1 DS1 Loops at any building within the service area of a wire center containing 60,000 or more Business Lines and four (4) or more fiber-based collocators (DS1 Threshold). Except as set forth in Section 1.7 above and Section 2.3 below, once a wire center exceeds both of the thresholds set forth in this Section 2.2.4.1, AT&T will not be required to provide Section 251 DS1 Loops in that wire center.

2.2.4.2 DS3 Loops at any building within the service area of a wire center containing 38,000 or more Business Lines and four (4) or more fiber-based collocators (DS3 Threshold). Except as set forth in Section 1.7 above and Section 2.3 below, once a wire center exceeds both of the thresholds set forth in this Section 2.2.4.2, AT&T will not be required to provide Section 251 DS3 Loops in that wire center.

2.2.5 A list of wire centers meeting the criteria set forth in Sections 2.2.4.1 and 2.2.4.2 above, as ordered by the Commission in Docket No. 2004-361-U (Initial Wire Center List), is attached to AT&T's Carrier Notification Letter SN91086135, which is available on AT&T's Interconnection Services Web site, and is appended to this Attachment as Exhibit A.

2.2.6 Transition Period Pricing. From March 11, 2005 through March 10, 2006, AT&T shall charge a rate for NuVox's Embedded Base of DS1 and DS3 Loops and NuVox's Excess DS1 and DS3 Loops equal to 115% of the rate paid by NuVox for those elements on June 15, 2004. The Transition Period rate for DS1 and DS3 Loops shall be as set forth in the Pricing Schedule and this Section 2.2.6.

2.2.6.1 No later than March 10, 2006, or as soon as practicable thereafter, NuVox shall submit spreadsheet(s) identifying all of the Embedded Base of DS1 and DS3 Loops and Excess DS1 and DS3 Loops to be either disconnected or converted to other AT&T arrangements, as Conversions or Rearrangements, or transitioned to wholesale facilities obtained from other carriers, or to self-provisioned facilities. If NuVox chooses to convert DS1 and DS3 Loops to special access circuits, AT&T will include such DS1 and DS3 Loops within NuVox's total special access circuits, and will apply any discounts to which NuVox is entitled. The Parties shall negotiate a project schedule for the Conversion of the Embedded Base and Excess DS1 and DS3 Loops. Conversions will be subject to the switch-as-charge set forth in the Pricing Schedule. In the case of disconnection, the applicable disconnect charge set forth in the Agreement shall apply.

2.2.6.2 If NuVox failed to submit the spreadsheet(s) specified in Section 2.2.6.1 above for all of its Embedded Base and Excess DS1 and DS3 Loops on or before March 10, 2006, or as soon as practicable thereafter, AT&T will identify NuVox's remaining Embedded Base of DS1 and DS3 Loops and Excess DS1 and DS3 Loops, if any, and will transition such Loops to the equivalent tariffed AT&T service(s). Those facilities identified and transitioned by AT&T pursuant to this Section 2.2.6.2 shall be subject to all applicable disconnect charges as set forth in the Agreement and the full nonrecurring charges for installation of the equivalent tariffed AT&T service, as set forth in AT&T's tariffs.

2.2.6.3 For Embedded Base DS1 and DS3 Loops and Excess DS1 and DS3 Loops converted pursuant to Section 2.2.6.1 above or transitioned pursuant to Section 2.2.6.2 above, the applicable recurring charge for the alternative AT&T service shall apply to each facility as of March 11, 2006.

2.2.6.4 The transition of the Embedded Base and Excess DS1 and DS3 Loops must be performed in a manner that avoids, or otherwise minimizes to the extent possible, disruption or degradation to NuVox's customers' service.

2.3 Modifications and Updates to the Initial Wire Center List and Subsequent Transition Periods for DS1 and DS3 Loops

2.3.1 In the event AT&T seeks to designate additional wire centers that meet the criteria set forth in Sections 2.2.4.1 and 2.2.4.2 above, but that were not included in the Initial Wire Center List, AT&T shall provide to NuVox via Accessible Letter (AL), including AT&T's proposed list of any such additional wire centers (Subsequent Wire Center List), in accordance with the General Terms and Conditions of the Agreement, and posting on AT&T's CLEC Online website.

2.3.2 Effective ten (10) days after the date of AT&T's AL and Subsequent Wire Center List, AT&T shall not be required to unbundle DS1 and DS3 Loops, as applicable, in such Subsequent Wire Centers, except pursuant to the self-certification process set forth in Section 1.7 above.

2.3.3 For purposes of this Section 2.3, AT&T shall make available DS1 and DS3 Loops that were in service for NuVox in a wire center on the Subsequent Wire Center List as of the tenth (10th) day after the date of AT&T's AL and Subsequent Wire Center List (Subsequent Embedded Base), until ninety (90) days after the date of AT&T's AL and Subsequent Wire Center List (Subsequent Transition Period).

2.3.4 Subsequent disconnects or loss of customers shall be removed from the Subsequent Embedded Base.

2.3.5 The applicable rates for the Subsequent Embedded Base of DS1 and DS3 Loops during the Subsequent Transition Period, or until the date on which AT&T converts the Subsequent Embedded Base to alternative AT&T arrangements, whichever is sooner, shall be 115% of the rates set forth in the Pricing Schedule for those elements on the date of AT&T's AL and Subsequent Wire Center List.

2.3.6 No later than forty (40) days from date of AT&T's AL and Subsequent Wire Center List, or as soon as practicable thereafter, NuVox shall submit a spreadsheet(s) identifying all of the Subsequent Embedded Base of DS1 and DS3 Loops to be disconnected or converted to other AT&T arrangements, as Conversions or Rearrangements, or transitioned to wholesale facilities obtained from other carriers, or to self-provisioned facilities. If NuVox chooses to convert DS1 and DS3 Loops to special access circuits, AT&T will include such DS1 and DS3 Loops within NuVox's total special access circuits, and will apply any discounts to which NuVox is entitled. The Parties shall negotiate a project schedule for the Conversion of the Subsequent Embedded Base. Conversions will be subject to the switch-as-is charge set forth in the Pricing Schedule. In the case

of disconnection, the applicable disconnect charge set forth in the Agreement shall apply.

2.3.7 If NuVox fails to submit the spreadsheet(s) specified in Section 2.3.6 above for all of its Subsequent Embedded Base within forty (40) days after the date of AT&T's AL and Subsequent Wire Center List, or as soon as practicable thereafter, and otherwise fails to dispute AT&T's Subsequent Wire Center List, AT&T will identify NuVox's remaining Subsequent Embedded Base, if any, and will transition such facilities to the equivalent tariffed AT&T service. Those facilities identified and transitioned by AT&T shall be subject to all applicable disconnect charges as set forth in the Agreement and the full nonrecurring charges for installation of the equivalent tariffed AT&T service, as set forth in AT&T's tariffs.

2.3.8 Subject to Section 1.7 above, for Subsequent Embedded Base facilities in place after ninety (90) days following the date of AT&T's AL and Subsequent Wire Center List, the applicable recurring charge for the alternative AT&T service shall apply to each facility as of the first day after the end of the Subsequent Transition Period.

2.3.9 The Subsequent Embedded Base of DS1 and DS3 Loops converted by AT&T pursuant to Sections 2.3.6 and 2.3.7 must be converted in a manner that avoids, or otherwise, minimizes to the extent possible, disruption or degradation to NuVox's customers' service.

2.4 Loops

2.4.1 Copper Loops. AT&T will provide access to unbundled Copper loops as required by FCC Rule 51.319(a)(1).

2.4.2 Hybrid Loops. AT&T will provide access to unbundled hybrid Loops as required by FCC Rule 51.319(a)(2).

2.4.3 AT&T will provide access to Fiber to the Home and Fiber to the Curb Loops as required by 47 C.F.R. § 51.319(a)(3).

2.4.3.1 Fiber to the Home (FTTH) Loops are local loops consisting entirely of fiber optic cable, whether dark or lit, serving an customer's premises or, in the case of predominantly residential multiple dwelling units (MDUs), a fiber optic cable, whether dark or lit, that extends to the MDU minimum point of entry (MPOE).

2.4.3.2 Fiber to the Curb (FTTC) Loops are local loops consisting of fiber optic cable connecting to a copper distribution plant that is not more than five hundred (500) feet from the customer's premises or, in the case of predominantly residential MDUs, not more than five hundred (500) feet from the MDU's MPOE. The fiber optic cable in a FTTC loop must connect to a copper distribution plant at a

serving area interface from which every other copper distribution subloop also is not more than five hundred (500) feet from the respective customer's premises.

2.4.3.3 Greenfield Requirements. In new build (Greenfield) areas, where AT&T has only deployed FTTH/FTTC facilities, AT&T is under no obligation to provide such FTTH and FTTC Loops. FTTH facilities include fiber loops deployed to the MPOE of a MDU that is predominately residential regardless of the ownership of the inside wiring from the MPOE to each customer in the MDU.

2.4.3.4 Overbuild Requirements. In FTTH/FTTC overbuild situations where AT&T also has copper loops, AT&T will make those copper loops available to NuVox on an unbundled basis, until such time as AT&T chooses to retire those copper Loops using the FCC's network disclosure requirements. In these cases, AT&T will offer a 64 kilobits per second voice grade channel over its FTTH/FTTC facilities. AT&T's retirement of copper loops must comply with Applicable Law.

2.4.3.4.1 In FTTH/FTTC overbuild areas where AT&T has not yet retired copper facilities, AT&T is not obligated to ensure that such copper Loops in that area are capable of transmitting signals prior to receiving a request for access to such Loops by NuVox. If the request is received by AT&T for a copper Loop, and the copper Loop facilities have not yet been retired, AT&T will restore the copper Loop to serviceable condition if technically feasible. In these instances of Loop orders in a FTTH/FTTC overbuild area, AT&T's standard Loop provisioning interval will not apply, and the order will be handled on a project basis, by which the Parties will negotiate the applicable provisioning interval.

2.4.3.5 Notwithstanding the above, nothing in this Section 2.4.3 shall limit AT&T's obligation to offer CLECs unbundled DS1 and DS3 loops (or loop/transport combination) in any wire center where AT&T is required to provide such loop facilities.

2.4.3.6 Hybrid Loops are defined in the federal rules at 47 CFR §51.319(a)(2) as local Loops, composed of both fiber optic cable, usually in the feeder plant, and copper twisted wire or cable, usually in the distribution plant. AT&T shall provide NuVox with nondiscriminatory access to the time division multiplexing features, functions and capabilities of such Hybrid Loops, including DS1 and DS3 capacity where impairment exists, on an unbundled basis to establish a complete transmission path between AT&T's central office and a customer's premises, but AT&T is not required to provide access to the packet switched features, functions and capabilities of its Hybrid Loops.

2.4.3.6.1 AT&T shall not engineer the transmission capabilities of its network in a manner, or engage in any policy, practice or procedure the disrupts or degrades access to a local Loop or subloop, including the time division multiplexing-based features, functions and capabilities of a Hybrid Loop, for which a requesting

telecommunications carrier may obtain or has obtained access pursuant to this Agreement.

2.4.3.7 DS1 Loops. A DS1 loop is a digital local loop having a total digital signal speed of 1.544 megabytes per second. DS1 loops include, but are not limited to, two-wire and four-wire copper loops capable of providing high-bit rate digital subscriber line services, including T1 services.

2.4.3.8 Upon NuVox's request, AT&T shall provide NuVox with nondiscriminatory access to DS1 loops on an unbundled basis under the Agreement in accordance with this Section, and 47 U.S.C. § 251(c)(3) and 47 C.F.R. Part 51.

2.4.3.9 DS3 Loops. A DS3 loop is a digital local loop having a total digital signal speed of 44.736 megabytes per second.

2.4.3.10 Upon NuVox's request, AT&T shall provide NuVox with nondiscriminatory access to DS3 loops on an unbundled basis under the Agreement in accordance with this Section, 47 U.S.C. § 251(c)(3), 47 C.F.R. Part 51.

2.4.4 **Dark Fiber Loops**

2.4.4.1 AT&T shall provide NuVox with nondiscriminatory access to a Dark Fiber Loop on an unbundled basis. Dark Fiber Loop is fiber within an existing fiber optic cable that has not been activated through the use of optronics to render it capable of carrying communications services that extends from the demarcation point at an end user customer's premises and the AT&T central office. Dark Fiber Loops may be strands of optical fiber existing in aerial or underground structure.

2.4.4.2 **Transition for Dark Fiber Loop**

2.4.4.2.1 For purposes of this Section 2.4.4.2, the Transition Period for Dark Fiber Loops (defined in Section 2.4.4.1) is the eighteen (18) month period beginning March 11, 2005 and ending September 10, 2006.

2.4.4.2.2 For purposes of this Section 2.4.4.2, Embedded Base means Dark Fiber Loops that were in service for NuVox as of March 11, 2005. For the State of South Carolina, during the Transition Period, NuVox shall be entitled to order and AT&T shall provision moves, changes and additions of Dark Fiber Loops that NuVox orders for the purpose of serving its existing Dark Fiber Loop customers as of March 10, 2005, at such customers' new or existing physical locations, and such facilities shall be included in the Embedded Base. Subsequent disconnects or loss of customers shall be removed from the Embedded Base.

2.4.4.2.3 During the Transition Period, AT&T shall make Dark Fiber Loops available for NuVox's Embedded Base at the rates, terms and conditions set forth in this Section 2.4.4.2.

2.4.4.3 Transition Period Pricing. From March 11, 2005 through September 10, 2006, AT&T shall charge a rate for NuVox's Embedded Base of Dark Fiber Loops equal to 115% of the rate paid by NuVox for that element on June 15, 2004. The Transition Period rate for Dark Fiber Loops shall be as set forth in the Pricing Schedule and this Section 2.4.4.3.

2.4.4.3.1 Effective September 11, 2006, Dark Fiber Loops shall no longer be made available pursuant to the Agreement.

2.4.4.3.2 No later than September 10, 2006, or as soon as practicable thereafter, NuVox shall submit spreadsheet(s) identifying all of the Embedded Base of Dark Fiber Loops to be either disconnected or converted to other AT&T arrangements, as Conversions or Rearrangements, or transitioned to wholesale services obtained from other carriers, or to self-provisioned facilities. If NuVox chooses to convert Dark Fiber Loops to special access circuits, AT&T will include such Dark Fiber Loops within NuVox's total special access circuits, and will apply any discounts to which NuVox is entitled. The Parties shall negotiate a project schedule for the Conversion of the Embedded Base of Dark Fiber Loops. Conversions will be subject to the switch-as-is charge set forth in the Pricing Schedule. In the case of disconnection, the applicable disconnect charge set forth in the Agreement shall apply.

2.4.4.3.3 If NuVox failed to submit the spreadsheet(s) specified in Section 2.4.4.3.2 above for all of its Embedded Base on or before September 10, 2006, or as soon as practicable thereafter, AT&T will identify NuVox's remaining Embedded Base of Dark Fiber Loops, if any, and will transition such facilities to the equivalent tariffed AT&T service. Those facilities identified and transitioned by AT&T pursuant to this Section 2.4.4.3.3 shall be subject to all applicable disconnect charges as set forth in the Agreement and full nonrecurring charges for installation of the equivalent tariffed AT&T service, as set forth in AT&T's tariffs.

2.4.4.3.4 Notwithstanding any other provision of this Agreement, for Embedded Base Dark Fiber Loops in place after September 11, 2006, the applicable recurring charge for the alternative AT&T service shall apply to each facility as of September 11, 2006.

2.4.4.4 The transition of the Embedded Base of Dark Fiber Loops must be performed in a manner that avoids, or otherwise minimizes to the extent possible, disruption or degradation to NuVox's customers' service.

2.4.5 **Loop Testing/Trouble Reporting**

2.4.5.1 NuVox will be responsible for testing and isolating troubles on the loops. NuVox must test and isolate trouble to the AT&T portion of a designed/non-designed

unbundled loop (e.g., UVL-SL2, UCL-D, UVL-SL1, UCL-ND, etc.) before reporting repair to the UNE Customer Wholesale Interconnection Network Services (CWINS) Center. Upon request from AT&T at the time of the trouble report, NuVox will be required to provide the results of the NuVox test which indicate a problem on the AT&T provided loop.

2.4.5.2 Once NuVox has isolated a trouble to the AT&T provided loop, and has issued a trouble report to AT&T on the loop, AT&T will take the actions necessary to repair the loop if a trouble actually exists. AT&T will repair these loops in a reasonable and nondiscriminatory manner and in time frames that are as favorable as those in which AT&T repairs similarly situated loops to its customers.

2.4.5.3 If NuVox reports a trouble on a non-designed or designed loop and no trouble actually exists, AT&T will charge NuVox for any dispatching and testing (both inside and outside the CO) required by AT&T in order to confirm the loop's working status. AT&T will assess the applicable Maintenance of Service Charge rates from AT&T's FCC No. 1 Section 13.3.1 for designed circuits, Section A4.3.1 of the GSSTs for Alabama, Kentucky, Louisiana, Mississippi and Tennessee where trouble determination for non-designed circuits is covered under premises work charges, Section A15.4.1 of the GSSTs for Florida and North Carolina where trouble determination for non-designed circuits is covered under trouble location charges, and Section N1.1.2 of the Non-Regulated Services Pricing tariff for Georgia and South Carolina where trouble determination for non-designed circuits is covered under trouble determination charges. If NuVox reports the same trouble on the same UNE loop within thirty (30) calendar days of AT&T's notification to NuVox of its disposition of the prior trouble, and AT&T is able to determine that such trouble does exist on AT&T's network, NuVox shall be credited on the next billing cycle for charges associated with the prior trouble.

2.4.5.4 In the event AT&T must dispatch to the customer's location more than once due to incorrect or incomplete information provided by NuVox (*e.g.,* incomplete address, incorrect contact name/number, etc.), AT&T will bill NuVox for each additional dispatch required to repair the circuit due to the incorrect/incomplete information provided, in accordance with rates set forth in the Pricing Schedule.

2.4.5.5 AT&T shall test all loops at parity in a nondiscriminatory manner. The results of such testing, to the extent available, shall be provided to NuVox upon request.

2.5 Order Coordination and Order Coordination-Time Specific

2.5.1 "Order Coordination" (OC) allows AT&T and NuVox to coordinate the installation of the SL2 loops, Unbundled Digital loops (UDL) and other loops where OC may be purchased as an option, to NuVox's facilities to limit customer service outage. OC is available when the loop is provisioned over an existing

circuit that is currently providing service to the customer. OC for physical conversions will be scheduled at AT&T's discretion during normal working hours on the committed due date. OC shall be provided in accordance with the chart set forth below.

2.5.2 "Order Coordination – Time Specific" (OC-TS) allows NuVox to order a specific time for OC to take place. AT&T will make every effort to accommodate NuVox's specific conversion time request. However, AT&T reserves the right to negotiate with NuVox a conversion time based on load and appointment control when necessary. This OC-TS is a chargeable option for all loops except Unbundled Copper loops (UCL) and is billed in addition to the OC charge. NuVox may specify a time between 9:00 a.m. and 4:00 p.m. (location time) Monday through Friday (excluding holidays). If NuVox specifies a time outside this window, or selects a time or quantity of loops that requires AT&T technicians to work outside normal work hours, overtime charges will apply in addition to the OC and OC-TS charges. Overtime charges will be applied based on the amount of overtime worked and in accordance with the rates established in the Access Services Tariff, Section E13.2, for each state. The OC-TS charges for an order due on the same day at the same location will be applied on a per Local Service Request (LSR) basis.

2.5.3 For a coordinated conversion, i.e., to LNP with loop or to stand alone loop where OC is provided for in this agreement, AT&T shall verbally coordinate the disconnect with NuVox and perform any switch translations so as to limit customer service outage. When OC is provided, AT&T will call NuVox twenty-four (24) to forty-eight (48) hours prior to the actual conversion to ensure NuVox will be ready on the due date and to review the details of the cutover. NuVox may designate the conversion time when the conversion involves a loop with LNP by ordering Time Specific conversion at rates designated in this agreement. For Time Specific conversions, AT&T and NuVox shall mutually agree upon cut over time and AT&T will verify the cut over time designated by NuVox twenty-four (24) to forty-eight (48) hours in advance to ensure that the conversion is to be completed as ordered. Both Parties will use best efforts to ensure that conversions will commence within fifteen (15) minutes of the established time, with the exception of conversions involving IDLC where the Commission has granted extended conversion windows. For coordinated conversions, AT&T's target interval for service disruption to the customer is fifteen (15) minutes or less.

	Order Coordination (OC)	**Order Coordination – Time Specific (OC-TS)**	**Test Points**	**DLR**	**Charge for Dispatch and Testing if No Trouble Found**
SL-1	Chargeable	Chargeable Option	Not	Chargeable Option –	Charged for Dispatch inside and outside

(Non-Designed)	Option		available	ordered as Engineering Information Document	Central Office
UCL-ND **(Non-Designed)**	Chargeable Option	Not Available	Not Available	Chargeable Option – ordered as Engineering Information Document	Charged for Dispatch inside and outside Central Office
Unbundled Voice Loops - SL-2 (including 2- and 4-wire UVL) (Designed)	Included	Chargeable Option	Included	Included	Charged for Dispatch outside Central Office
Unbundled Digital Loop (Designed)	Included	Chargeable Option (except on Universal Digital Channel)	Included (where appropriate)	Included	Charged for Dispatch outside Central Office
Unbundled Copper Loop (Designed)	Chargeable in accordance with Section 2	Not available	Included	Included	Charged for Dispatch outside Central Office
For UVL-SL1 and UCLs, NuVox must order and will be billed for both OC and OC-TS if requesting OC-TS.					

2.6 CLEC to CLEC Conversions for Unbundled Loops

2.6.1 The CLEC to CLEC Conversion for Unbundled Loops process, located on AT&T's CLEC Online web site, for unbundled loops may be used by NuVox when converting an existing unbundled loop from another CLEC for the same customer. The loop type being converted must be included in NuVox's Interconnection Agreement before requesting a conversion.

2.6.2 To utilize the CLEC to CLEC conversion process, the loop being converted must be the same loop type with no requested changes to the loop, must serve the same customer location from the same serving wire center, and must not require an outside dispatch to provision.

2.6.3 The loops converted to NuVox pursuant to the CLEC to CLEC conversion process shall be provisioned in the same manner and with the same functionality and options as described in this Attachment for the specific loop type.

2.7 Bulk Migration

2.7.1 If NuVox requests to migrate twenty-five (25) or more UNE-Port/Loop Combination (UNE-P) customers to UNE-Loop (UNE-L) in the same Central Office on the same due date, NuVox must use the Bulk Migration process, which is described in the AT&T Bulk Migration (Single LSR/Bulk Arrangement) CLEC Information Package located at AT&T's CLEC Online website. The rates for the Bulk Migration process shall be the nonrecurring rates associated with the loop type being requested in the Bulk Migration as set forth in the Pricing Schedule. Additionally, an electronic OSS charges will apply for each customer account subject to the Bulk Migration Request. The migration of loops from Integrated Digital Loop Carrier (IDLC) will be done pursuant to Section 2.13.1 below.

2.8 Ordering Guidelines and Processes

2.8.1 Ordering and provisioning for UNEs and Other Services shall be as set forth in Attachment 6.

2.8.2 Additional UNE product information may also be found on AT&T's CLEC Online website located at https://clec.att.com/clec .

2.8.3 The provisioning of Network Elements, Combinations and Other Services to CLEC's Collocation Space will require cross-connections within the central office to connect the Network Element, Combinations or Other Services to the demarcation point associated with CLEC's Collocation Space. These cross-connects are separate components that are not considered a part of the Network Element, Combinations or Other Services and, thus, have a separate charge pursuant to this Agreement.

2.9 Unbundled Voice Loops (UVLs)

2.9.1 AT&T shall make available the following UVLs:

2.9.1.1 2-wire Analog Voice Grade Loop – SL1 (Non-Designed)

2.9.1.2 2-wire Analog Voice Grade Loop – SL2 (Designed)

2.9.1.3 4-wire Analog Voice Grade Loop (Designed)

2.9.2 Unbundled Voice Loops (UVL) may be provisioned using any type of facility that will support voice grade services. This may include loaded copper, non-loaded copper, digital loop carrier systems, fiber/copper combination (hybrid loop) or a combination of any of these facilities. AT&T, in the normal course of maintaining, repairing, and configuring its network, may also change the facilities that are used to provide any given voice grade circuit. This change may occur at any time and shall result in no voice grade service disruption or degradation to the

customer. In these situations, AT&T will ensure that the newly provided facility will support a 64 kbps channel capable of supporting voice grade services. AT&T will not guarantee that NuVox will be able to continue to provide any advanced services over the new facility. AT&T will offer UVL in two different service levels - Service Level One (SL1) and Service Level Two (SL2).

2.9.2.1 Unbundled Voice Loop - SL1 (UVL-SL1) loops are 2-wire loop start circuits, will be non-designed, and will not have remote access test points. OC will be offered as a chargeable option on SL1 loops when reuse of existing facilities has been requested by NuVox. NuVox may also order OC-TS when a specified conversion time is requested. OC-TS is a chargeable option for any coordinated order and is billed in addition to the OC charge. An Engineering Information (EI) document can be ordered as a chargeable option. The EI document provides Loop MakeUp (LMU) information, which is similar to the information normally provided in a Design Layout Record (DLR). Upon issuance of a non-coordinated order in the service order system, SL1 loops will be activated on the due date in the same manner and time frames that AT&T normally activates POTS-type loops for its customers. For SL1 orders that include the OC option, AT&T will use best efforts to notify NuVox within thirty (30) minutes of the completion of the physical wire work.

2.9.2.1.1 For an additional charge AT&T will make available additional loop testing so that NuVox may request further testing on new UVL-SL1 Loops. Rates for additional loop testing are as set forth in the Pricing Schedule.

2.9.2.2 Unbundled Voice Loop – SL2 (UVL-SL2) loops may be 2-wire or 4-wire circuits, shall have remote access test points, and will be designed with a DLR provided to NuVox. SL2 circuits can be provisioned with loop start, ground start or reverse battery signaling. OC is provided as a standard feature on SL2 loops. The OC feature will allow NuVox to coordinate the installation of the loop with the disconnect of an existing customer's service and/or number portability service. In these cases, AT&T will perform the order conversion with standard order coordination at AT&T's discretion during normal work hours.

2.10 Unbundled Digital Loops

2.10.1 AT&T will offer Unbundled Digital Loops (UDL). UDLs are service specific, will be designed, will be provisioned with test points (where appropriate), and will come standard with OC and a DLR. The various UDLs are intended to support a specific digital transmission scheme or service.

2.10.2 AT&T shall make available the following UDLs as set forth below:

2.10.2.1 2-wire Unbundled ISDN Digital Loop

2.10.2.2 2-wire Unbundled ADSL Compatible Loop

2.10.2.3 2-wire Unbundled HDSL Compatible Loop

2.10.2.4 4-wire Unbundled HDSL Compatible Loop

2.10.2.5 4-wire Unbundled DS1 Digital Loop

2.10.2.6 4-wire Unbundled Digital Loop/DS0 – 64 kbps, 56 kbps and below

2.10.2.7 DS3 Loop

2.10.2.8 STS-1 Loop

2.10.3 2-Wire Unbundled ISDN Digital Loops will be provisioned according to industry standards for 2-Wire Basic Rate ISDN services and will come standard with a test point, OC, and a DLR. NuVox will be responsible for providing AT&T with a Service Profile Identifier (SPID) associated with a particular ISDN-capable loop and customer. With the SPID, AT&T will be able to adequately test the circuit and ensure that it properly supports ISDN service. When ISDN loops are provisioned using a Digital Loop Carrier (DLC) system, AT&T will ensure that the loops are provisioned on time slots that are compatible with data-only services such as IDSL.

2.10.3.1 Upon the Effective Date of this Agreement, Universal Digital Channel (UDC) elements will no longer be offered by AT&T and no new orders for UDC will be accepted. Any existing UDCs that were provisioned prior to the Effective Date of this Agreement will be grandfathered at the rates set forth in the Parties' interconnection agreement that was in effect immediately prior to the Effective Date of this Agreement. Existing UDCs that were provisioned prior to the Effective Date of this Agreement may remain connected, maintained and repaired according to AT&T's TR73600 until such time as they are disconnected by NuVox or AT&T provides ninety (90) calendar days notice that such UDC must be terminated at which point the Parties will coordinate the transition in a cooperative manner. NuVox may order an ISDN loop, if available, to provide the same functionality as the previously offered UDC product.

2.10.4 2-Wire ADSL-Compatible Loop. This is a designed loop that is provisioned according to Revised Resistance Design (RRD) criteria and may be up to 18,000 feet long and may have up to 6,000 feet of bridged tap (inclusive of loop length). The loop is a 2-wire circuit and will come standard with a test point, OC, and a DLR.

2.10.5 2-Wire or 4-Wire HDSL-Compatible Loop. This is a designed loop that meets Carrier Serving Area (CSA) specifications, may be up to 12,000 feet long and may have up to 2,500 feet of bridged tap (inclusive of loop length). It may be a 2-wire or 4-wire circuit and will come standard with a test point, OC, and a DLR.

2.10.6 4-Wire Unbundled DS1 Digital Loop. This is a designed 4-wire loop that is provisioned according to industry standards for DS1 or Primary Rate ISDN services and will come standard with a test point, OC, and a DLR. A DS1 loop may be provisioned over a variety of loop transmission technologies including copper, HDSL-based technology or fiber optic transport systems. It will include a 4-Wire DS1 Network Interface at the customer's location. For the purposes of this Agreement, including the transition of DS1 and DS3 loops described in Section 2.2 above, DS1 loops include 2-wire and 4-wire copper loops capable of providing high-bit rate digital subscriber line services, such as 2-wire and 4-wire loops HDSL-Compatible loops.

2.10.7 4-Wire Unbundled Digital/DS0 Loop. These are designed 4-wire loops that may be configured as 64kbps, 56kbps, 19kbps, and other sub-rate speeds associated with digital data services and will come standard with a test point, OC, and a DLR.

2.10.8 DS3 Loop**.** DS3 loop is a two-point digital transmission path which provides for simultaneous two-way transmission of serial, bipolar, return-to-zero isochronous digital electrical signals at a transmission rate of 44.736 megabits per second (Mbps). It may provide transport for twenty-eight (28) DS1 channels, each of which provides the digital equivalent of twenty-four (24) analog voice grade channels. The interface to unbundled dedicated DS3 transport is a metallic-based electrical interface. DS3 loops come with a test point and a DLR. DS3 loops require a Service Inquiry (SI) in order to ascertain availability. Rates are mileage sensitive and the mileage is in airline miles, rounded up and a minimum of one (1) mile applies. AT&T TR 73501 LightGate®Service Interface and Performance Specifications, Issue D, June 1995 applies to DS3 service.

2.10.9 STS-1 Loop**.** STS-1 loop is a high-capacity digital transmission path with SONET VT1.5 mapping that is dedicated for the use of the ordering customer. It is a two-point digital transmission path that provides for simultaneous two-way transmission of serial bipolar return-to-zero synchronous digital electrical signals at a transmission rate of 51.84 megabits per second (Mbps). It may provide transport for twenty-eight (28) DS1 channels, each of which provides the digital equivalent of twenty-four (24) analog voice grade channels. The interface to unbundled dedicated STS-1 transport is a metallic-based electrical interface. STS-1 loops come with a test point and a DLR. STS-1 loops require a Service Inquiry (SI) in order to ascertain availability.

2.11 Unbundled Copper Loops (UCL)

2.11.1 AT&T shall make available Unbundled Copper Loops (UCLs). The UCL is a copper twisted pair loop that is unencumbered by any intervening equipment (e.g., filters, load coils, range extenders, digital loop carrier, or repeaters) and is

not intended to support any particular telecommunications service. The UCL will be offered in two types – Designed and Non-Designed.

2.11.2 Unbundled Copper Loop – Designed (UCL-D)

2.11.2.1 The UCL-D will be provisioned as a dry copper twisted pair (two (2)- or four (4)-wire) loop that is unencumbered by any intervening equipment (e.g., filters, load coils, range extenders, digital loop carrier, or repeaters).

2.11.2.2 A UCL-D will be 18,000 feet or less in length and is provisioned according to Resistance Design parameters, may have up to 6,000 feet of bridged tap and will have up to 1300 Ohms of resistance.

2.11.2.3 The UCL-D is a designed circuit, is provisioned with a test point, and comes standard with a DLR. OC is a chargeable option for a UCL-D; however, OC is always required on UCLs where a reuse of existing facilities has been requested by NuVox.

2.11.2.4 These loops are not intended to support any particular services and may be utilized by NuVox to provide a wide-range of telecommunications services as long as those services do not adversely affect AT&T's network. This facility will include a Network Interface Device (NID) at the customer's location for the purpose of connecting the loop to the customer's inside wire.

2.11.2.5 Upon the Effective Date of this Agreement, Unbundled Copper Loop – Long (UCL-L) elements will no longer be offered by AT&T and no new orders for UCL-L will be accepted. Any existing UCL-Ls that were provisioned prior to the Effective Date of this Agreement will be grandfathered at the rates set forth in the Parties' interconnection agreement that was in effect immediately prior to the Effective Date of this Agreement. Existing UCL-Ls that were provisioned prior to the Effective Date of this Agreement may remain connected, maintained and repaired according to AT&T's TR73600 and may remain connected until such time as they are disconnected by NuVox or AT&T provides ninety (90) calendar days notice that such UDC must be terminated at which point the Parties will coordinate the transition in a cooperative manner.

2.11.3 Unbundled Copper Loop – Non-Designed (UCL-ND)

2.11.3.1 The UCL–ND is provisioned as a dedicated 2-wire metallic transmission facility from AT&T's Main Distribution Frame (MDF) to a customer's premises (including the NID). The UCL-ND will be a "dry copper" facility in that it will not have any intervening equipment such as load coils, repeaters, or digital access main lines (DAMLs), and may have up to 6,000 feet of bridged tap between the end user customer's premises and the serving wire center. The UCL-ND typically will be 1300 Ohms resistance and in most cases will not exceed 18,000 feet in length, although the UCL-ND will not have a specific length limitation. For

loops less than 18,000 feet and with less than 1300 Ohms resistance, the loop will provide a voice grade transmission channel suitable for loop start signaling and the transport of analog voice grade signals. The UCL-ND will not be designed and will not be provisioned with either a DLR or a test point.

2.11.3.2 The UCL-ND facilities may be mechanically assigned using AT&T's assignment systems. Therefore, the Loop Makeup (LMU) process is not required to order and provision the UCL-ND. However, NuVox can request LMU for which additional charges would apply.

2.11.3.3 For an additional charge, AT&T also will make available loop testing so that NuVox may request further testing on the UCL-ND. Rates for loop testing are as set forth in the Pricing Schedule.

2.11.3.4 UCL-ND loops are not intended to support any particular service and may be utilized by NuVox to provide a wide-range of telecommunications services as long as those services do not adversely affect AT&T's network. The UCL-ND will include a NID at the customer's location for the purpose of connecting the loop to the customer's inside wire.

2.11.3.5 OC will be provided as a chargeable option and may be utilized when the UCL-ND provisioning is associated with the reuse of AT&T facilities. OC-TS does not apply to this product.

2.11.3.6 NuVox may use AT&T's Unbundled Loop Modification (ULM) offering to remove excessive bridged taps and/or load coils from any copper loop within the AT&T network. Therefore, some loops that would not qualify as UCL-ND could be transformed into loops that do qualify, using the ULM process.

2.12 Unbundled Loop Modifications (Line Conditioning)

2.12.1 Line Conditioning is defined as the removal from a copper loop or copper subloop of any device that could diminish the capability of the loop or subloop to deliver high-speed switched wireline telecommunications capability, including xDSL services. Such devices include, but are not limited to bridged taps, load coils, low pass filters and range extenders. Insofar as it is technically feasible, AT&T shall test and report troubles for all the features, functions and capabilities of conditioned copper loops, and may not restrict its testing to voice transmission only.

2.12.2 AT&T will remove load coils only on copper loops and subloops that are less than eighteen thousand (18,000) feet in length, at the rates set forth in the Pricing Schedule. AT&T will remove load coils on copper loops and subloops that are greater than 18,000 feet in length upon request by NuVox, at rates pursuant to AT&T's Special Construction Process, contained in AT&T's FCC No. 2, as mutually agreed to by the Parties. Should AT&T begin removing load coils on

loops over 18,000 feet to provide high speed switched wireline telecommunications capability, including xDSL service to its customers, it will do so for NuVox at the rates set forth in the Pricing Schedule. Should AT&T begin removing load coils on loops over 18,000 feet for other carriers, other than at AT&T's Special Construction rates, it will do so for NuVox at parity, under the same rates, terms and conditions, and the Parties shall amend the Agreement to include the necessary rates, terms and conditions.

2.12.3 Any copper loop being ordered by NuVox which has over 6,000 feet of combined bridged tap will be modified, upon request from NuVox, so that the loop will have a maximum of 6,000 feet of bridged tap. This modification will be performed at no additional charge to NuVox. Line conditioning orders that require the removal of other bridged tap that serves no network design purpose on a copper Loop that will result in a combined total of bridged tap between two thousand five hundred (2,500) and six thousand (6,000) feet will be performed at the rates set forth in the Pricing Schedule.

2.12.4 NuVox may request removal of any unnecessary and non-excessive bridged tap (bridged tap between zero (0) and two thousand five hundred (2,500) feet which serves no network design purpose) at rates pursuant to AT&T's Special Construction Process, contained in AT&T's FCC No. 2, as mutually agreed to by the Parties. Should AT&T begin removing unnecessary and non-excessive bridged tap for other carriers, other than at AT&T's Special Construction rates, it will do so for NuVox at parity, under the same rates, terms and conditions, and the Parties shall amend the Agreement to include the necessary rates, terms and conditions.

2.12.5 Rates for Unbundled Loop Modification (ULM) are as set forth in the Pricing Schedule.

2.12.6 AT&T will not modify a loop in such a way that it no longer meets the technical parameters of the original loop type (e.g., voice grade, ADSL, etc.) being ordered. If NuVox wants a different type of loop, or wants the original loop type modified to a different loop type, than NuVox must submit a new order for that type of loop.

2.12.7 If NuVox requests ULM on a reserved facility for a new loop order, AT&T may perform a pair change and provision a different loop facility in lieu of the reserved facility with ULM if feasible. The loop provisioned will meet or exceed specifications of the requested loop facility as modified. NuVox will not be charged for ULM if a different loop is provisioned. For loops that require a DLR or its equivalent, AT&T will provide LMU detail of the loop provisioned.

2.12.8 NuVox will request loop make up information pursuant to the Agreement prior to submitting a service inquiry and/or an LSR for the loop type that NuVox desires AT&T to condition.

2.12.9 When requesting ULM for a loop that AT&T has previously provisioned for NuVox, NuVox will submit a SI to AT&T. If a spare loop facility that meets the loop modification specifications requested by NuVox is available at the location for which the ULM was requested, NuVox will have the option to change the loop facility to the qualifying spare facility rather than to provide ULM. In the event that AT&T changes the loop facility in lieu of providing ULM, NuVox will not be charged for ULM but will only be charged the service order charges for submitting an order.

2.13 Loop Provisioning Involving Integrated Digital Loop Carriers

2.13.1 Where NuVox has requested an unbundled loop and AT&T uses IDLC systems to provide the local service to the customer and AT&T has a suitable alternate facility available, AT&T will make such alternative facilities available to NuVox. If a suitable alternative facility is not available, then to the extent it is technically feasible, AT&T will implement one of the following alternative arrangements for NuVox (e.g., hairpinning):

1. Roll the circuit(s) from the IDLC to any spare copper that exists to the customer premises.
2. Roll the circuit(s) from the IDLC to an existing DLC that is not integrated.
3. If capacity exists, provide "side-door" porting through the switch.
4. If capacity exists, provide "Digital Access Cross Connect System (DACS)-door" porting (if the IDLC routes through a DACS prior to integration into the switch).

2.13.2 Arrangements 3 and 4 above require the use of a designed circuit. Therefore, non-designed loops such as the SL1 voice grade and UCL-ND may not be ordered in these cases.

2.13.3 If no alternate facility is available, and upon request from NuVox, and if agreed to by both Parties, AT&T may utilize its Special Construction (SC) process to determine the additional costs required to provision facilities. NuVox will then have the option of paying the one-time SC rates to place the loop.

2.14 Network Interface Device

2.14.1 The NID is defined as any means of interconnection of the end user customer's premises wiring to AT&T's distribution plant, such as a cross connect device used for that purpose. The NID is a single-line termination device or that portion of a multiple line termination device required to terminate a single line or circuit at the premises. Unless otherwise requested, all loops will be provisioned with the

appropriate Network Interface Device (NID). The NID features two (2) independent chambers or divisions that separate the service provider's network from the end user customer's premises wiring. Each chamber or division contains the appropriate connection points or posts to which the service provider and the customer each make their connections. The NID provides a protective ground connection and is capable of terminating cables such as twisted pair cable.

2.14.2 AT&T shall permit NuVox to connect NuVox's loop facilities to the end user customer's premises wiring through the AT&T NID or at any other technically feasible point.

2.14.3 **Access to NID**

2.14.3.1 NuVox may access the end user customer's premises wiring by any of the following means and NuVox shall not disturb the existing form of electrical protection and shall maintain the physical integrity of the NID:

2.14.3.1.1 In Alabama, Georgia, Kentucky, South Carolina and Tennessee, AT&T shall allow NuVox to connect its loops directly to AT&T's multi-line residential NID enclosures that have spare terminations available or NuVox can connect to terminations that currently have loops attached to them but that are not currently used by AT&T or any other telecommunications carrier to provide service to the premises.

2.14.3.1.2 In Florida, Louisiana, Mississippi and North Carolina, if no spare terminations are available, NuVox must connect its loops to its own NID adjoining AT&T's multi-line residential NID. NuVox can install the NID and cross connect to AT&T's NID itself. If NuVox decides to do so, NuVox can have AT&T install the NID or have AT&T install the NID and cross connect to AT&T's NID. To have AT&T do this installation work NuVox must submit an LSR. AT&T will perform the installation and bill NuVox a nonrecurring charge for the NID or for the NID and cross connect.

2.14.3.1.3 Where an adequate length of the end user customer's premises wiring is present and environmental conditions permit, either Party may remove the end user customer's premises wiring from the other Party's NID and connect such wiring to that Party's own NID, provided that it has received the appropriate consent from the customer and has provided reasonable advanced notice to the other Party.

2.14.3.1.4 Either Party may enter the subscriber access chamber or dual chamber NID enclosures for the purpose of extending a connection or spliced jumper wire from the end user customer's premises wiring through a suitable "punch-out" hole of such NID enclosures; or

2.14.3.1.5 NuVox may request AT&T to make other rearrangements to the end user customer's premises wiring terminations or terminal enclosure on a time and materials cost basis.

2.14.3.2 In no case shall either Party remove or disconnect the other Party's loop facilities from either Party's NIDs, enclosures, or protectors unless the applicable Commission has expressly permitted the same and the disconnecting Party provides prior notice to the other Party. In such cases, it shall be the responsibility of the Party disconnecting loop facilities to leave undisturbed the existing form of electrical protection and to maintain the physical integrity of the NID. It shall be the responsibility of the Party disconnecting loop facilities to ensure there is no safety hazard, and that Party shall hold the other harmless for any liability associated with the removal of the loop facilities from the other Party's NID. Furthermore, it shall be the responsibility of the disconnecting Party, once the other Party's loop has been disconnected from the NID, to reconnect the disconnected loop to a nationally recognized testing laboratory listed station protector, which has been grounded as per Article 800 of the National Electrical Code. If no spare station protector exists in the NID, the disconnected loop must be appropriately cleared, capped and stored.

2.14.3.3 NuVox shall not remove or disconnect ground wires from AT&T's NIDs, enclosures, or protectors.

2.14.3.4 NuVox shall not remove or disconnect NID modules, protectors, or terminals from AT&T's NID enclosures.

2.14.3.5 Due to the wide variety of NID enclosures and outside plant environments, AT&T will work with NuVox to develop specific procedures to establish the most effective means of implementing this Section 2.14.3 if the procedures set forth herein do not apply to the NID in question.

2.14.4 **Technical Requirements**

2.14.4.1 The NID shall provide an accessible point of interconnection and shall maintain a connection to ground.

2.14.4.2 If an existing NID is accessed, it shall be capable of transferring electrical analog or digital signals between the end user customer's premises and the distribution media and/or cross connect to NuVox's NID.

2.14.4.3 Existing AT&T NIDs will be provided in working condition**.** Where such NID is not functioning properly, AT&T shall repair the NID at AT&T's expense. NuVox may request AT&T to do additional work to the NID, including relocating the NID and extending associated distribution plant and inside wiring/UNTW, as appropriate, to that new location, on a time and material basis, except where AT&T does not charge its retail customers to perform the same functions. When

NuVox deploys its own local loops in a multiple-line termination device, NuVox shall specify the quantity of NID connections that it requires within such device.

2.14.4.4 The NID shall be equal to or better than all requirements for NIDs set forth in the applicable industry standard technical requirements.

2.14.5 **Subloop Elements**

2.14.5.1 Where facilities permit, AT&T shall offer access to its Unbundled Subloop (USL) elements in accordance with FCC C.F.R. 51.319 (b).

2.15 Unbundled Subloop Distribution

2.15.1 The Unbundled Subloop Distribution facility is a dedicated transmission facility that AT&T provides from a customer's point of demarcation to an AT&T cross-connect device. The AT&T cross-connect device may be located within a remote terminal (RT) or a stand-alone cross-box in the field or in the equipment room of a building. The unbundled subloop distribution media is a copper twisted pair that can be provisioned as a 2-Wire or 4-Wire facility. AT&T will make available the following subloop distribution offerings where facilities exist:

Unbundled Subloop Distribution – Voice Grade
Unbundled Copper Subloop
Unbundled Subloop Distribution – Intrabuilding Network Cable (aka riser cable)

2.15.1.1 Unbundled Subloop Distribution – Voice Grade (USLD-VG) is a copper subloop facility from the cross-box in the field up to and including the point of demarcation at the end user customer's premises and may have load coils.

2.15.1.2 Unbundled Copper Subloop (UCSL) is a copper facility of any length provided from the cross-box in the field up to and including the customer's point of demarcation. If available, this facility will not have any intervening equipment such as load coils between the end user customer's premises and the cross-box.

2.15.1.2.1 If NuVox requests a UCSL and it is not available, NuVox may request the copper subloop facility be modified pursuant to the ULM process to remove load coils and/or excessive bridged taps. If load coils and/or excessive bridged taps are removed, the facility will be classified as a UCSL.

2.15.1.3 Unbundled Subloop Distribution – Intrabuilding Network Cable (USLD-INC) is the distribution facility owned or controlled by AT&T inside a building or between buildings on the same property that is not separated by a public street or road. USLD-INC includes the facility from the cross-connect device in the building equipment room up to and including the point of demarcation at the end user customer's premises.

2.15.1.3.1 Upon request for USLD-INC from NuVox, AT&T will install a cross-connect panel in the building equipment room for the purpose of accessing USLD-INC pairs from a building equipment room. The cross-connect panel will function as a single point of interconnection (SPOI) for USLD-INC and will be accessible by multiple carriers as space permits. AT&T will place cross-connect blocks in 25-pair increments for NuVox's use on this cross-connect panel. NuVox will be responsible for connecting its facilities to the 25-pair cross-connect block(s).

2.15.1.4 For access to Voice Grade USLD and UCSL, NuVox shall install a cable to the AT&T cross-box pursuant to the terms and conditions for physical collocation for remote sites set forth in this Agreement. This cable would be connected by an AT&T technician within the AT&T cross-box during the set-up process. NuVox's cable pairs can then be connected to AT&T's USL within the AT&T cross-box by the AT&T technician.

2.15.1.5 Through the SI process, AT&T will determine whether access to unbundled subloops at the location requested by NuVox is technically feasible and whether sufficient capacity exists in the cross-box. If existing capacity is sufficient to meet NuVox's request, then AT&T will perform the site set-up as described in the CLEC Information Package, located at AT&T's CLEC Online website.

2.15.1.6 The site set-up must be completed before NuVox can order subloop pairs. For the site set-up in an AT&T cross-connect box in the field, AT&T will perform the necessary work to splice NuVox's cable into the cross-connect box. For the site set-up inside a building equipment room, AT&T will perform the necessary work to install the cross-connect panel and the connecting block(s) that will be used to provide access to the requested USLs.

2.15.1.7 Once the site set-up is complete, NuVox will request subloop pairs through submission of an LSR form to the Local Carrier Service Center (LCSC). OC is required with USL pair provisioning when NuVox requests reuse of an existing facility, and the OC charge shall be billed in addition to the USL pair rate. For expedite requests by NuVox for subloop pairs, expedite charges will apply for intervals less than five (5) calendar days.

2.15.1.8 Unbundled subloops will be provided in accordance with technical reference TR-73600.

2.16 Unbundled Network Terminating Wire (UNTW)

2.16.1 UNTW is unshielded twisted copper wiring that is used to extend circuits from an intra-building network cable terminal or from a building entrance terminal to an individual customer's point of demarcation. It is the final portion of the loop that

in multi-subscriber configurations represents the point at which the network branches out to serve individual subscribers.

2.16.2 AT&T will provide this element in Multi-Dwelling Units (MDUs) and/or Multi-Tenants Units (MTUs) where AT&T owns, controls or leases, but only to the extent that AT&T has control by virtue of such lease, wiring all the way to the end users customer's premises. AT&T shall use commercially reasonable efforts to obtain the right to permit NuVox to access the UNTW.

2.16.3 **Requirements**

2.16.3.1 On a multi-unit premises, upon request of NuVox, AT&T will provide access to UNTW pairs on an Access Terminal that is suitable for use by multiple carriers at each Garden Terminal or Wiring Closet.

2.16.3.2 Except as otherwise required in this Attachment or as necessary for AT&T to perform its obligations under Section 2.17.3.1, AT&T shall not be required to install new or additional UNTW beyond existing UNTW to provision the services of NuVox.

2.16.3.3 Upon receipt of the UNTW SI requesting access to AT&T's UNTW pairs at a multi-unit premises, representatives of both Parties will participate in a meeting at the site of the requested access. The purpose of the site visit will include discussion of the procedures for installation and location of the Access Terminals. By request of NuVox, an Access Terminal will be installed either adjacent to each of AT&T's Garden Terminal or inside each Wiring Closet. NuVox will deliver and connect its central office facilities to the UNTW pairs within the Access Terminal. NuVox may access any available pair on an Access Terminal. A pair is available when a pair is not being utilized to provide service or where the customer has requested a change in its local service provider to NuVox on that pair. Prior to connecting NuVox's service on a pair previously used by AT&T, NuVox will use commercially reasonable efforts to ensure the customer is no longer using AT&T's service or another CLEC's service on that pair before accessing UNTW pairs.

2.16.3.4 Access Terminal installation intervals will be established on an individual case basis.

2.16.3.5 NuVox is responsible for obtaining the property owner's permission for AT&T to install an Access Terminal(s) on behalf of NuVox. The submission of the SI by NuVox will serve as certification by NuVox that such permission has been obtained. If the property owner objects to Access Terminal installations that are in progress or within thirty (30) calendar days after completion and demands removal of the Access Terminals, NuVox will be responsible for costs associated

with removing the Access Terminals and restoring the property to its original state prior to Access Terminals being installed.

2.16.3.6 NuVox shall indemnify and hold harmless AT&T against any claims of any kind that may arise out of NuVox's failure to obtain the property owner's permission.

2.16.3.7 NuVox will be billed for nonrecurring and recurring charges for accessing UNTW pairs at the time NuVox activates the pair(s). NuVox will notify AT&T within five (5) business days of activating UNTW pairs using the LSR form.

2.16.3.8 If a trouble exists on a UNTW pair, NuVox may use an alternate spare pair that serves that customer if a spare pair is available. In such cases, NuVox will re-terminate its existing jumper from the defective pair to the spare pair. Alternatively, NuVox will isolate and report troubles to AT&T. In such cases, NuVox must tag the UNTW pair that requires repair. If AT&T dispatches a technician on a reported trouble call and no UNTW trouble is found, AT&T will charge NuVox for time spent on the dispatch and testing the UNTW pair(s).

2.16.3.9 If NuVox initiates the Access Terminal installation and NuVox has not activated at least ten percent (10%) of the capacity of the Access Terminal installed pursuant to NuVox's request for an Access Terminal within six (6) months of installation of the Access Terminal, AT&T will bill NuVox a nonrecurring charge equal to the actual cost of provisioning the Access Terminal. Once NuVox has activated at least ten percent (10%) of the capacity of the Access Terminal within six (6) months of installation of the Access Terminal, NuVox will not be billed for the placement of the Access Terminal even if the percentage of activated pairs drops at a later time below ten percent (10%) or is completely deactivated.

2.16.3.10 If AT&T determines that NuVox is using the UNTW pairs without reporting the activation of the pairs, NuVox will be billed for the use of that pair back to the date the customer began receiving service from NuVox at that location. Upon request, NuVox will provide copies of its redacted billing record or installation order with sufficient information to substantiate such date. If NuVox fails to provide such records, then AT&T will bill NuVox back to the date of the Access Terminal installation.

2.17 Unbundled Subloop Feeder

2.17.1 Upon the Effective Date of this Agreement, Unbundled Subloop Feeder (USLF) elements will no longer be offered by AT&T at TELRIC prices. Within ninety (90) calendar days of the Effective Date of this Agreement, NuVox will either negotiate market-based rates for these elements or will issue orders to have these elements disconnected. If, after this ninety (90) day period, market-based rates have not been negotiated and NuVox has not issued the appropriate disconnect

orders, AT&T may immediately disconnect any remaining USLF elements and will bill NuVox any applicable disconnect charges at rates set forth in the Pricing Schedule.

2.18 Unbundled Loop Concentration

2.18.1 Upon the Effective Date of this Agreement, the Unbundled Loop Concentration (ULC) element will no longer be offered by AT&T and no new orders for ULC will be accepted. Any existing ULCs that were provisioned prior to the Effective Date of this Agreement will be grandfathered at the rates set forth in the Parties' interconnection agreement that was in effect immediately prior to this Agreement and may remain connected, maintained and repaired according to AT&T's TR73600 until such time as they are disconnected by NuVox, or AT&T provides ninety (90) calendar days notice that such ULC must be terminated at which point the Parties will coordinate the transition in a cooperative manner.

2.19 Loop Makeup

2.19.1 **Description of Service**

2.19.1.1 AT&T shall make available to NuVox LMU information so that NuVox can make an independent judgment about whether the loop is capable of supporting the advanced services equipment NuVox intends to install and the services NuVox wishes to provide. This Section 2.19 addresses LMU as a preordering transaction, distinct from NuVox ordering any other service(s). Loop Makeup Service Inquiries (LMUSI) and mechanized LMU queries are likewise unique from other preordering functions with associated SIs as described in this Agreement.

2.19.1.2 AT&T will provide NuVox LMU information consisting of the composition of the loop material (copper/fiber); the existence, location and type of equipment on the loop, including but not limited to digital loop carrier or other remote concentration devices, feeder/distribution interfaces, bridged taps, load coils, pair-gain devices; the loop length; the wire gauge and electrical parameters.

2.19.1.3 AT&T's LMU information is provided to NuVox as it exists either in AT&T's databases or in its hard copy facility records. AT&T does not guarantee accuracy or reliability of the LMU information provided, but AT&T shall provide to NuVox the same information that it would provide to itself.

2.19.1.4 AT&T's provisioning of LMU information to the requesting CLEC for facilities is contingent upon either AT&T or the requesting CLEC controlling the loop(s) that serve the service location for which LMU information has been requested by the CLEC. The requesting CLEC is not authorized to receive LMU information on a facility used or controlled by another CLEC unless the requesting CLEC has

a Letter of Authorization (LOA) from the CLEC using or controlling the loop (owner) or its authorized agent on the LMUSI submitted by the requesting CLEC.

2.19.1.5 NuVox may choose to use equipment that it deems will enable it to provide a certain type and level of service over a particular AT&T loop as long as that equipment does not disrupt other services on the AT&T network. The determination shall be made solely by NuVox and AT&T shall not be liable in any way for the performance of the advanced data services provisioned over said loop. The specific loop type (ADSL, HDSL, or otherwise) ordered on the LSR must match the LMU of the loop reserved taking into consideration any requisite line conditioning. The LMU data is provided for informational purposes only and does not guarantee NuVox's ability to provide advanced data services over the ordered loop type. Further, if NuVox orders loops that do not require a specific facility medium or loops that are not intended to support advanced services (such as UVL-SL1, UVL-SL2) and that are not inventoried as advanced services loops, the LMU information for such loops is subject to change at any time due to modifications and/or upgrades to AT&T's network. NuVox is fully responsible for any of its service configurations that may differ from AT&T's technical standard for the loop type ordered.

2.19.2 **Submitting Loop Makeup Service Inquiries**

2.19.2.1 NuVox may obtain LMU information by submitting a mechanized LMU query or a Manual LMUSI. Mechanized LMUs should be submitted through AT&T's OSS interfaces. After obtaining the loop information from the mechanized LMU process, if NuVox needs further loop information in order to determine loop service capability, NuVox may initiate a separate Manual Service Inquiry for a separate nonrecurring charge as set forth in the Pricing Schedule.

2.19.2.2 Manual LMUSIs shall be submitted according to the guidelines in the LMU CLEC Information Package available at AT&T's CLEC Online website. The service interval for the return of a Manual LMUSI is three (3) business days. Manual LMUSIs are not subject to expedite requests. This service interval is distinct from the interval applied to the subsequent service order.

2.19.3 **Loop Reservations**

2.19.3.1 For a Mechanized LMUSI, NuVox may reserve up to ten (10) loop facilities. For a Manual LMUSI, NuVox may reserve up to three (3) loop facilities.

2.19.3.2 NuVox may reserve facilities for up to four (4) business days for each facility requested through LMU from the time the LMU information is returned to NuVox. During and prior to NuVox placing an LSR, the reserved facilities are rendered unavailable to other customers, including AT&T. If NuVox does not submit an LSR for a UNE service on a reserved facility within the four (4)

business day reservation timeframe, the reservation of that spare facility will become invalid and the facility will be released.

2.19.3.3 Charges for preordering Manual LMUSI or Mechanized LMU are separate from any charges associated with ordering other services from AT&T.

2.19.3.4 All LSRs issued for reserved facilities shall reference the facility reservation number as provided by AT&T. NuVox will not be billed any additional LMU charges for the loop ordered on such LSR. If, however, NuVox does not reserve facilities upon an initial LMUSI, NuVox's placement of an order for an advanced data service type facility will incur the appropriate billing charges to include SI and reservation per the Pricing Schedule.

2.19.3.5 Where NuVox has reserved multiple loop facilities on a single reservation, NuVox may not specify which facility shall be provisioned when submitting the LSR. For those occasions, AT&T will assign to NuVox, subject to availability, a facility that meets the AT&T technical standards of the AT&T type loop as ordered by NuVox.

3. Line Splitting

3.1 AT&T will provide Line Splitting in accordance with 47 C.F.R. § 51.319(a)(1)(ii). Line Splitting shall mean that a provider of data services (a Data LEC) and a provider of voice services (a Voice LEC) deliver voice and data service to customers over the same loop. The Voice LEC and Data LEC may be the same or different carriers.

3.1.1 When customers on loops using High Frequency Spectrum CO Based line sharing services are converted to Line Splitting, AT&T will discontinue billing NuVox for the High Frequency Spectrum. It is the responsibility of NuVox or its authorized agent to determine if the loop is compatible for Line Splitting Service. NuVox or its authorized agent may use the existing loop unless it is not compatible with the Data LEC's data service and NuVox or its authorized agent submits an LSR to AT&T to change the loop.

3.2 Line Splitting – UNE-L. In the event NuVox provides its own switching or obtains switching from a third party, NuVox may engage in line splitting arrangements with another CLEC using a splitter, provided by NuVox, in a Collocation Space at the central office where the loop terminates into a distribution frame or its equivalent.

3.2.1 **Provisioning Line Splitting and Splitter Space – UNE-L**

3.2.1.1 NuVox provides the splitter when providing Line Splitting with UNE-L. When NuVox or its authorized agent owns the splitter, Line Splitting requires the following:

3.2.1.1.1 A non-designed, analog loop from the NID at the customer's location to the serving wire center; a collocation cross-connection connecting the loop to the collocation space; and a second collocation cross-connection from the collocation space connected to the voice port; and

3.2.1.1.2 An unloaded 2-wire copper loop must serve the customer.

3.2.1.2 The meet point for the Voice LEC and the Data LEC is the point of termination on the MDF for the Data LEC's cable and pairs.

3.2.1.3 NuVox or its authorized agent may purchase, install and maintain central office POTS splitters in its collocation arrangements. NuVox or its authorized agent may use such splitters for access to its customers and to provide digital line subscriber services to its customers using the high frequency spectrum of the UNE-L. Existing Collocation rules and procedures and the terms and conditions relating to Collocation set forth in Attachment 4 Central Office shall apply.

3.2.1.4 Any splitters installed by NuVox in its collocation arrangement shall comply with ANSI T1.413, Annex E, or any future ANSI splitter Standards. NuVox may install any splitters that AT&T deploys or permits to be deployed for itself or any AT&T affiliate.

3.2.2 **Maintenance – Line Splitting – UNE-L**

3.2.2.1 AT&T will be responsible for repairing troubles with the physical loop between the NID at the customer's premises and the termination point. NuVox will be responsible for maintaining the voice and data services. Each party will be responsible for maintaining its own equipment.

3.2.3 **Indemnification**

3.2.3.1 NuVox shall indemnify, defend and hold harmless AT&T from and against any claims, losses, actions, causes of action, suits, demands, damages, injury and costs, including reasonable attorney fees proximately arising out of or resulting from actions taken by the data provider or NuVox in connection with the line splitting arrangement, except to the extent caused by AT&T's negligence, gross negligence or willful misconduct.

4. Local Switching and UNE-P

4.1 Local Switching and UNE-P are not offered as a Section 251 Network Elements pursuant to the Agreement.

4.2 Transition For Local Switching and UNE-P

4.2.1 For purposes of this Section 4.2, the Transition Period for the Embedded Base of Local Switching and UNE-P is the twelve (12) month period beginning March 11, 2005 and ending March 10, 2006.

4.2.2 For purposes of this Section 4.2, Embedded Base shall mean Local Switching and UNE-P, and any additional elements that are required to be provided in conjunction therewith, that were in service for NuVox as of March 11, 2005. For the State of South Carolina, during the Transition Period, NuVox shall be entitled to order and AT&T shall provision moves, changes and additions of Local Switching and UNE-P, and any additional elements that are required to be provided in conjunction therewith, that NuVox orders for the purpose of serving its existing Local Switching and UNE-P customers as of March 10, 2005, at such customers' new or existing physical locations, and such facilities shall be included in the Embedded Base. Subsequent disconnects or loss of customers shall be removed from the Embedded Base.

4.2.3 Transition Period Pricing. From March 11, 2005 through March 10, 2006, AT&T shall charge a rate for NuVox's Embedded Base of Local Switching and UNE-P equal to the rate at which NuVox leased that element or combination of elements on June 15, 2004, plus one dollar. The Transition Period rates for Local Switching and UNE-P, respectively, shall be as set forth in the Pricing Schedule and this Section 4.2.3.

5. Unbundled Network Element Combinations

5.1 AT&T shall provide unbundled network element combinations in accordance with 47 CFR 51.315.

5.1.1 For purposes of this Section 5, references to "Currently Combined" Network Elements shall mean that the particular Network Elements requested by NuVox are in fact already combined by AT&T in the AT&T network. References to "Ordinarily Combined" Network Elements shall mean that the particular Network Elements requested by NuVox are not already combined by AT&T in the location requested by NuVox but are elements that are typically combined in AT&T's network. References to "Not Typically Combined" Network Elements shall mean that the particular Network Elements requested by NuVox are not elements that AT&T combines for its use in its network.

5.1.2 Upon request, AT&T shall perform the functions necessary to combine UNEs in any manner, even if those elements are not ordinarily combined in AT&T's network, provided that such Combination is technically feasible and will not undermine the ability of other carriers to obtain access to UNEs or to interconnect with AT&T's network.

5.2 Enhanced Extended Links (EELs)

5.2.1 EELs are combinations of unbundled loops and Dedicated Transport, together with any facilities, equipment, or functions necessary to combine those Network Elements. AT&T shall provide NuVox with EELs where the underlying UNE or UNEs are available and in all instances where the requesting carrier meets the FCC's eligibility requirements, if applicable.

5.2.2 EELs include, but are not limited to the following combinations:

5.2.2.1 DS1 Interoffice Channel + DS1 Channelization + 2-wire VG Local Loop

5.2.2.2 DS1 Interoffice Channel + DS1 Channelization + 4-wire VG Local Loop

5.2.2.3 DS1 Interoffice Channel + DS1 Channelization + 2-wire ISDN Local Loop

5.2.2.4 DS1 Interoffice Channel + DS1 Channelization + 4-wire 56 kbps Local Loop

5.2.2.5 DS1 Interoffice Channel + DS1 Channelization + 4-wire 64 kbps Local Loop

5.2.2.6 DS1 Interoffice Channel + DS1 Local Loop

5.2.2.7 DS3 Interoffice Channel + DS3 Local Loop

5.2.2.8 STS-1 Interoffice Channel + STS-1 Local Loop

5.2.2.9 DS3 Interoffice Channel + DS3 Channelization + DS1 Local Loop

5.2.2.10 STS-1 Interoffice Channel + DS3 Channelization + DS1 Local Loop

5.2.2.11 2-wire VG Interoffice Channel + 2-wire VG Local Loop

5.2.2.12 4wire VG Interoffice Channel + 4-wire VG Local Loop

5.2.2.13 4-wire 56 kbps Interoffice Channel + 4-wire 56 kbps Local Loop

5.2.2.14 4-wire 64 kbps Interoffice Channel + 4-wire 64 kbps Local Loop

5.2.2.15 Commingled loop and transport facilities at the DS1 and/or DS3 Level

5.2.3 High-capacity EELs are combinations of 1) UNE loops, as defined in this Agreement, with UNE transport, as defined in this Agreement; 2) UNE loops, as defined in this Agreement, with wholesale transport; or 3) UNE transport, as defined in this Agreement, with wholesale loops at the DS1 and/or DS3 level as described in FCC 47 C.F.R. 51.318(b). High-capacity EELs must comply with the service eligibility requirements set forth in Section 5.2.5 below.

5.2.4 By placing an order for a high-capacity EEL, NuVox thereby certifies that the high-capacity EEL service eligibility criteria set forth herein are met for access to a converted high-capacity EEL, a new high-capacity EEL, or part of a high-

capacity commingled EEL as a UNE. AT&T may not deny, except as set forth in Section 5.2.6 below, NuVox's request for a high-capacity EEL based upon eligibility criteria, but shall have the right to clarify the order back to NuVox rather than processing the order should the AT&T representative identify that NuVox does not have a collocation arrangement that meets the requirements of 47 C.F.R. 51.318(c).

5.2.5 **Service Eligibility Criteria**

5.2.5.1 By placing an order for a high capacity EEL, NuVox certifies that all of the following service eligibility criteria are met for each high capacity EEL. These service eligibility criteria apply to all wholesale, as well as retail, service offerings by NuVox over high capacity EELs.

5.2.5.1.1 NuVox has received state certification to provide local voice service in the area being served or, in the absence of a state certification requirement, has complied with registration, tariffing, filing fee, or other regulatory requirements applicable to the provision of local voice service in that area;

5.2.5.1.2 For each combined circuit, including each DS1 circuit, each DS1 EEL, and each DS1-equivalent circuit on a DS3 EEL:

5.2.5.1.2.1 1) Each circuit to be provided to each customer will be assigned a local number prior to the provision of service over that circuit;

5.2.5.1.2.2 2) Each DS1-equivalent circuit on a DS3 EEL must have its own local number assignment, so that each DS3 must have at least twenty-eight (28) local voice numbers assigned to it;

5.2.5.1.2.3 3) Each circuit to be provided to each customer will have 911 or E911 capability prior to provision of service over that circuit;

5.2.5.1.2.4 4) Each circuit to be provided to each customer will terminate in a collocation arrangement that meets the requirements of FCC 47 C.F.R. § 51.318(c);

5.2.5.1.2.5 5) Each circuit to be provided to each customer will be served by an interconnection trunk in the same LATA as the customer premises served by the EEL over which NuVox will transmit the calling party's number in connection with calls exchanged over the trunk;

5.2.5.1.2.6 6) For each twenty-four (24) DS1 EELs or other facilities having equivalent capacity, NuVox will have at least one (1) active DS1 local service interconnection trunk within the LATA over which NuVox will transmit the calling party's number in connection with calls exchanged over the trunk;

5.2.5.1.2.7 7) Each circuit to be provided to each customer will be served by a switch capable of switching local voice traffic.

5.2.6 **EEL Audit Provisions**

5.2.6.1 AT&T may, on an annual basis, and only based upon cause, conduct an audit of NuVox's records in order to verify compliance with the high capacity EEL eligibility criteria. To invoke its limited right to audit, AT&T shall send a written Notice of Audit to NuVox, identifying the cause upon which AT&T rests its allegations. Such Notice of Audit will be delivered to NuVox no less than thirty (30) calendar days prior to the date upon which AT&T seeks to commence an audit.

5.2.6.2 The audit shall be conducted by a third party independent auditor, retained and paid for by AT&T. The audit shall be conducted at a mutually agreeable location (or locations).

5.2.6.3 The audit must be performed in accordance with the standards established by the American Institute for Certified Public Accountants (AICPA) which will require the auditor to perform an "examination engagement" and issue an opinion regarding NuVox's compliance with the high capacity EEL eligibility criteria. AICPA standards and other AICPA requirements related to determining the independence of an auditor shall govern the audit of requesting carrier compliance. The concept of materiality governs this audit; the independent auditor's report will conclude whether or the extent to which NuVox complied in all material respects with the applicable service eligibility criteria. Consistent with standard auditing practices, such audits require compliance testing designed by the independent auditor, which typically include an examination of a sample selected in accordance with the independent auditor's judgment.

5.2.6.4 To the extent the independent auditor's report concludes that NuVox failed to comply with the high capacity EEL service eligibility criteria, NuVox must true-up any difference in payments, convert all noncompliant circuits to the appropriate service, and make the correct payments on a going-forward basis.

5.2.6.5 To the extent the independent auditor's report concludes that NuVox failed to comply in all material respects with the service eligibility criteria, NuVox shall reimburse AT&T for the cost of the independent auditor. Similarly, to the extent the independent auditor's report concludes that NuVox did comply in all material respects with the service eligibility criteria, AT&T will reimburse NuVox for its reasonable and demonstrable costs associated with the audit, including, among other things, staff time. The Parties shall provide such reimbursement within thirty (30) calendar days of receipt of a statement of such costs.

5.2.6.6 NuVox will maintain appropriate documentation to support its certifications.

5.3 Rates

5.3.1 The rates for the Currently Combined Network Elements specifically set forth in the Pricing Schedule shall be the rates associated with such Combinations. Where a Currently Combined Combination is not specifically set forth in the Pricing Schedule, the rate for such Currently Combined Combination of Network Elements shall be the sum of the recurring rates for those individual Network Elements in addition to the applicable non-recurring switch-as-is charge set forth in the Pricing Schedule.

5.3.2 The rates for the Ordinarily Combined Network Elements specifically set forth in the Pricing Schedule shall be the non-recurring and recurring charges for those Combinations. Where an Ordinarily Combined Combination is not specifically set forth in the Pricing Schedule, the rate for such Ordinarily Combined Combination of Network Elements shall be the sum of the recurring and non-recurring rates for those individual Network Elements as set forth in the Pricing Schedule.

5.3.3 AT&T shall provide other Currently Combined, Ordinarily Combined and Not Typically Combined UNE Combinations to NuVox in addition to those specifically referenced in this Section 5 above, where available.

5.3.4 To the extent NuVox requests a Combination for which AT&T does not have rates and methods and procedures in place to provide such Combination, rates and/or methods and procedures for such Combination will be developed pursuant to the BFR process.

6. DS1 and DS3 Dedicated Transport, Including DS1 and DS3 Entrance Facilities; Dark Fiber Transport and Dark Fiber Entrance Facilities

6.1 AT&T shall offer unbundled access to Dedicated Transport in accordance with FCC Rules 47 C.F.R. § 51.311 and 51.319 and Section 251(c) (3) of the Act. Dedicated Transport is defined as AT&T's interoffice transmission facilities, dedicated to a particular customer or carrier that NuVox uses for transmission between wire centers or switches owned by AT&T and within the same LATA, or between wire centers or switches owned by AT&T and switches owned by NuVox. To the extent that AT&T has local switching equipment, as defined by the FCC's rules, "reverse collocated" in a non-incumbent LEC premises, the transmission path from this point back to the AT&T wire center shall constitute Dedicated Transport.

6.2 Transition for Certain DS1 and DS3 Dedicated Transport Including DS1 and DS3 Entrance Facilities

6.2.1 For purposes of this Section 6.2, the Transition Period for the Embedded Base of DS1 and DS3 Dedicated Transport, Embedded Base Entrance Facilities and

Excess DS1 and DS3 Dedicated Transport is the twelve (12) month period beginning March 11, 2005 and ending March 10, 2006.

6.2.2 For purposes of this Section 6.2, Embedded Base means DS1 and DS3 Dedicated Transport facilities that were in service for NuVox as of March 11, 2005 in those wire centers that the Commission determined in Docket No. 2004-316-C met the criteria set forth in Sections 6.2.5.1 or 6.2.5.2 below. For the State of South Carolina, during the Transition Period, NuVox shall be entitled to order and AT&T shall provision moves, changes and additions of DS1 and DS3 Dedicated Transport that NuVox orders for the purpose of serving its existing DS1 and DS3 Dedicated Transport customers as of March 10, 2005, at such customers' new or existing physical locations, and such facilities shall be included in the Embedded Base. Subsequent disconnects or loss of customers shall be removed from the Embedded Base.

6.2.3 For purposes of this Section 6.2, Embedded Base Entrance Facilities means Entrance Facilities that were in service for NuVox as of March 11, 2005. Subsequent disconnects or loss of customers shall be removed from the Embedded Base.

6.2.4 For purposes of this Section 6.2, Excess DS1 and DS3 Dedicated Transport means those DS1 and DS3 Dedicated Transport facilities that were in service for NuVox as of March 11, 2005, in excess of the caps set forth in Section 6.2.7 below. Subsequent disconnects or loss of customers shall be removed from the Embedded Base.

6.2.5 Notwithstanding anything to the contrary in this Agreement, and except as set forth in Section 6.3 below, AT&T shall make available DS1 and DS3 Dedicated Transport meeting the following thresholds for NuVox's Embedded Base, and Excess DS1 and DS3 Dedicated Transport, during the Transition Period:

6.2.5.1 DS1 Dedicated Transport where both wire centers at the end points of the route contain 38,000 or more Business Lines or four (4) or more fiber-based collocators (Tier 1 Wire Center). Except as set forth in Sections 1.7 above and 6.3 below, once a wire center meets or exceeds either of the thresholds set forth in this Section 6.2.5.1, AT&T will not be required to provide Section 251 DS1 Dedicated Transport in that wire center.

6.2.5.1.1 For purposes of counting Business Lines, a DS1 line corresponds to 24 Business Lines.

6.2.5.2 DS3 Dedicated Transport where both wire centers at the end points of the route contain 24,000 or more Business Lines or three (3) or more fiber-based collocators (Tier 2 Wire Center). Except as set forth in Section 1.7 above and Section 6.3 below, once a wire center meets or exceeds either of the thresholds set

forth in this Section 6.2.5.2, AT&T will not be required to provide Section 251 DS3 Dedicated Transport in that wire center.

6.2.6 Notwithstanding anything to the contrary in this Agreement, AT&T shall make available DS1 and DS3 Embedded Base Entrance Facilities for NuVox's Embedded Base during the Transition Period.

6.2.7 NuVox may obtain a maximum of twelve (12) unbundled Section 251 DS3 Dedicated Transport facilities on each route where DS3 Dedicated Transport is available as a 251 Network Element, and a maximum of ten (10) unbundled Section 251 DS1 Dedicated Transport facilities on each Route where there is no Section 251(c)(3) unbundling obligation for DS3 Dedicated Transport, but for which impairment exists for DS1 Dedicated Transport.

6.2.8 A list of wire centers meeting the criteria set forth in Sections 6.2.5.1 and 6.2.5.2 above, as ordered by the Commission in Docket No. 2004-316-U (Initial Wire Center List), is attached to AT&T's Carrier Notification Letter SN91086135, which is available on AT&T's Interconnection Services Web site, and is appended to this Attachment as Exhibit A.

6.2.9 Transition Period Pricing. From March 11, 2005 through March 10, 2006, AT&T shall charge a rate for NuVox's Embedded Base of DS1 and DS3 Dedicated Transport, Embedded Base Entrance Facilities and Excess DS1 and DS3 Dedicated Transport equal to 115% of the rate paid by NuVox for those elements on June 15, 2004. The Transition Period rate for DS1 and DS3 Dedicated Transport, Embedded Base Entrance Facilities and Excess DS1 and DS3 Dedicated Transport shall be as set forth in the Pricing Schedule and this Section 6.2.9.

6.2.10 The Transition Period shall apply only to NuVox's Embedded Base DS1 and DS3 Dedicated Transport, Embedded Base Entrance Facilities and NuVox's Excess DS1 and DS3 Dedicated Transport. NuVox shall not add new Entrance Facilities pursuant to the Agreement.

6.2.11 No later than March 10, 2006, or as soon as practicable thereafter, NuVox shall submit spreadsheet(s) identifying all of the Embedded Base of DS1 and DS3 Dedicated Transport, Embedded Base Entrance Facilities and Excess DS1 and DS3 Dedicated Transport to be either disconnected or converted to other AT&T arrangements, as Conversions or Rearrangements, or transitioned to wholesale facilities obtained from other carriers, or to self-provisioned facilities. If NuVox chooses to convert DS1 and DS3 Dedicated Transport and DS1 and DS3 Entrance Facilities to special access circuits, AT&T will include such DS1 and DS3 Dedicated Transport and DS1 and DS3 Entrance Facilities within NuVox's total special access circuits, and will apply any discounts to which NuVox is entitled. The Parties shall negotiate a project schedule for the Conversion of the Embedded

Base of DS1 and DS3 Dedicated Transport, Embedded Base Entrance Facilities and Excess DS1 and DS3 Dedicated Transport. Conversions will be subject to the switch-as-is charge set forth in the Pricing Schedule. In the case of disconnection, the applicable disconnect charge set forth in the Agreement shall apply.

6.2.12 If NuVox failed to submit the spreadsheet(s) specified in Section 6.2.11 above for all of its Embedded Base of DS1 and DS3 Dedicated Transport, Embedded Base Entrance Facilities and Excess DS1 and DS3 Dedicated Transport on or before March 10, 2006, or as soon as practicable thereafter, AT&T will identify NuVox's remaining Embedded Base of DS1 and DS3 Dedicated Transport, Embedded Base Entrance Facilities and Excess DS1 and DS3 Dedicated Transport, if any, and will transition such facilities to the equivalent tariffed AT&T service. Those facilities identified and transitioned by AT&T shall be subject to all applicable disconnect charges as set forth in the Agreement and the full nonrecurring charges for installation of the equivalent tariffed AT&T service, as set forth in AT&T's tariffs.

6.2.13 Notwithstanding any other provision of the Agreement, for the Embedded Base of DS1 and DS3 Dedicated Transport, Embedded Base Entrance Facilities and Excess DS1 and DS3 Dedicated Transport in place after March 11, 2006, the applicable recurring charge for the alternative AT&T service shall apply to each facility as of March 11, 2006.

6.2.14 The transition of the Embedded Based of DS1 and DS3 Dedicated Transport, Embedded Base Entrance Facilities and Excess DS1 and DS3 Dedicated Transport must be performed in a manner that avoids, or otherwise, minimizes to the extent possible, disruption or degradation to NuVox's customers' service.

6.3 Modifications and Updates to the Initial Wire Center List and Subsequent Transition Periods for DS1 and DS3 Dedicated Transport

6.3.1 In the event AT&T seeks to designate additional wire centers that meet the criteria set forth in Sections 6.2.5.1 and 6.2.5.2 above, but that were not included in the Initial Wire Center List, AT&T shall provide to NuVox an AL, including AT&T's proposed list of any such additional wire centers (Subsequent Wire Center List), in accordance with the General Terms and Conditions of the Agreement, and AT&T shall post such AL on AT&T's CLEC Online website.

6.3.2 Effective ten (10) days after the date of AT&T's AL and Subsequent Wire Center List, AT&T shall not be required to unbundle DS1 and DS3 Dedicated Transport, as applicable, in such Subsequent Wire Centers, except pursuant to the self-certification process set forth in Section 1.7 above.

6.3.3 For purposes of this Section 6.3, AT&T shall make available DS1 and DS3 Dedicated Transport facilities that were in service for NuVox in a wire center on the Subsequent Wire Center List as of the tenth (10th) day after the date of AT&T's AL and Subsequent Wire Center List (Subsequent Embedded Base), until ninety (90) days after the date of AT&T's AL and Subsequent Wire Center List (Subsequent Transition Period).

6.3.4 Subsequent disconnects or loss of customers shall be removed from the Subsequent Embedded Base.

6.3.5 The applicable rates for the Subsequent Embedded Base of DS1 and DS3 Dedicated Transport during the Subsequent Transition Period, or until the date on which AT&T converts the Subsequent Embedded Base to alternative AT&T arrangements, whichever is sooner, shall be 115% of the rates set forth in the Pricing Schedule for those elements on the date of AT&T's AL and Subsequent Wire Center List.

6.3.6 No later than forty (40) days from date of AT&T's AL and Subsequent Wire Center List, or as soon as practicable thereafter, NuVox shall submit a spreadsheet(s) identifying all of the Subsequent Embedded Base of DS1 and DS3 Dedicated Transport to be disconnected or converted to other AT&T arrangements, as Conversions or Rearrangements, or transitioned to wholesale facilities obtained from other carriers, or to self-provisioned facilities. If NuVox chooses to convert DS1 and DS3 Dedicated Transport to special access circuits, AT&T will include such DS1 and DS3 Dedicated Transport within NuVox's total special access circuits, and will apply any discounts to which NuVox is entitled. The Parties shall negotiate a project schedule for the Conversion of the Subsequent Embedded Base. Conversions will be subject to the switch-as-is charge set forth in the Pricing Schedule. In the case of disconnection, the applicable disconnect charge set forth in the Agreement shall apply.

6.3.7 If NuVox fails to submit the spreadsheet(s) specified in Section 6.3.6 above for all of its Subsequent Embedded Base within forty (40) days after the date of AT&T's AL and Subsequent Wire Center List, or as soon as practicable thereafter, and otherwise fails to dispute AT&T's Subsequent Wire Center List, AT&T will identify NuVox's remaining Subsequent Embedded Base of DS1 and DS3 Dedicated Transport, if any, and will transition such facilities to the equivalent tariffed AT&T service. Those facilities identified and transitioned by AT&T shall be subject to all applicable disconnect charges as set forth in the Agreement and the full nonrecurring charges for installation of the equivalent tariffed AT&T service, as set forth in AT&T's tariffs.

6.3.8 AT&T and NuVox agree to resolve all disputes regarding AT&T's subsequent Wire Center List in a dispute resolution proceeding before the Commission, in accordance with the General Terms and Conditions of the Agreement.

6.3.9 Subject to Section 1.7 above, for Subsequent Embedded Base facilities in place after ninety (90) days following the date of AT&T's AL and Subsequent Wire Center List, the applicable recurring charge for the alternative AT&T service shall apply to each facility as of the first day after the end of the Subsequent Transition Period.

6.3.10 The Subsequent Embedded Base of DS1 and DS3 Dedicated Transport converted by AT&T pursuant to Sections 6.3.6 and 6.3.7 above must be converted in a manner that avoids, or otherwise, minimizes to the extent possible, disruption or degradation to NuVox's customers' service.

6.4 AT&T shall:

6.4.1 Provide NuVox exclusive use of Dedicated Transport to a particular customer or carrier;

6.4.2 Provide all technically feasible features, functions, and capabilities of Dedicated Transport as outlined within the technical requirements of this Section 6;

6.4.3 Permit, to the extent technically feasible, NuVox to connect Dedicated Transport to equipment designated by NuVox, including but not limited to, NuVox's collocated facilities; and

6.4.4 Permit, to the extent technically feasible and on a nondiscriminatory basis, NuVox to obtain the functionality provided by AT&T's digital cross-connect systems.

6.5 AT&T shall offer Dedicated Transport:

6.5.1 As capacity on a shared facility; and

6.5.2 As a circuit (i.e., DS0, DS1, DS3, STS-1) dedicated to NuVox.

6.6 Dedicated Transport may be provided over facilities such as optical fiber, copper twisted pair, and coaxial cable, and shall include transmission equipment such as line terminating equipment, amplifiers, and regenerators.

6.7 A route is defined as a transmission path between one of AT&T's wire centers or switches and another of AT&T's wire centers or switches. A route between two (2) points may pass through one or more intermediate wire centers or switches.

Transmission paths between identical end points are the same route, irrespective of whether they pass through the same intermediate wire centers or switches, if any.

6.8 Any request to re-terminate one (1) end of a circuit will require the issuance of new service and disconnection of the existing service and the applicable charges in the Pricing Schedule shall apply, and the re-terminated circuit shall be considered a new circuit as of the installation date.

6.9 Technical Requirements

6.9.1 The entire designated transmission service (e.g., DS0, DS1, DS3) shall be dedicated to NuVox designated traffic.

6.9.2 For DS1 or DS3 circuits, Dedicated Transport shall at a minimum meet the performance, availability, jitter, and delay requirements specified for Customer Interface to Central Office (CI to CO) connections in the applicable industry standards.

6.9.3 AT&T shall offer the following interface transmission rates for Dedicated Transport:

6.9.3.1 DS0 Equivalent;

6.9.3.2 DS1;

6.9.3.3 DS3; and

6.9.3.4 STS-1.

6.9.4 SDH (Synchronous Digital Hierarchy) Standard interface rates are in accordance with International Telecommunications Union (ITU) Recommendation G.707 and Plesiochronous Digital Hierarchy (PDH) rates per ITU Recommendation G.704.

6.9.5 AT&T shall design Dedicated Transport according to its network infrastructure. NuVox shall specify the termination points for Dedicated Transport.

6.9.6 At a minimum, Dedicated Transport shall meet each of the requirements set forth in the applicable industry technical references.

6.9.7 **AT&T Technical References**:

6.9.7.1 TR-TSY-000191 Alarm Indication Signals Requirements and Objectives, Issue 1, May 1986.

6.9.7.2 TR-73501 LightGate®Service Interface and Performance Specifications, Issue 7, January 2007.

6.9.7.3 TR-73525 MegaLink®Service, BellSouth®MegaLink Channel Service and BellSouth®MegaLink Plus Service Interface and Performance Specification, Issue D, May 1999.

6.10 Unbundled Channelization (Multiplexing)

6.10.1 Unbundled Channelization (UC) provides the optional multiplexing capability that will allow a DS1 (1.544 Mbps) or DS3 (44.736 Mbps) or STS-1 (51.84 Mbps) UNE or collocation cross connect to be multiplexed or channelized at a AT&T central office. Channelization can be accomplished through the use of a multiplexer or a digital cross connect system at the discretion of AT&T. Once UC has been installed, NuVox may request channel activation on an as needed basis and AT&T shall connect the requested facilities via Central Office Channel Interfaces (COCIs). The COCI must be compatible with the lower capacity facility and ordered with the lower capacity facility. This service is available as defined in NECA 4. Channelization may be incorporated within dedicated transport or ordered as a stand-alone capability, which requires either the high or low speed side to be connected to collocation.

6.10.2 AT&T shall make available the following channelization systems and interfaces:

6.10.2.1 DS1 Channelization System: channelizes a DS1 signal into a maximum of twenty-four (24) DS0s. The following COCIs are available: Voice Grade, Digital Data and ISDN.

6.10.2.2 DS3 Channelization System: channelizes a DS3 signal into a maximum of twenty-eight (28) DS1s. A DS1 COCI is available with this system.

6.10.2.3 STS-1 Channelization System: channelizes a STS-1 signal into a maximum of twenty-eight (28) DS1s. A DS1 COCI is available with this system.

6.10.2.4 AMI and B8ZS line coding with either Super Frame (SF) or Extended Super Frame (ESF) framing formats will be supported as an optional feature on DS1 facilities.

6.10.3 **Technical Requirements**

6.10.3.1 In order to assure proper operation with AT&T provided central office multiplexing functionality, NuVox's channelization equipment must adhere strictly to form and protocol standards. NuVox must also adhere to such

applicable industry standards for the multiplex channel bank, for voice frequency encoding, for various signaling schemes, and for sub rate digital access.

6.11 Dark Fiber Transport.

6.11.1 Dark Fiber Transport is defined as Dedicated Transport that consists of unactivated optical interoffice transmission facilities without attached signal regeneration, multiplexing, aggregation or other electronics. Except as set forth in Section 6.11.6 below, AT&T shall not be required to provide access to Dark Fiber Entrance Facilities pursuant to the Agreement.

6.11.2 AT&T shall provide access to Dark Fiber Transport for test access and testing at termination points (demarcation points) within the relevant Serving Wire Centers. For maintenance troubles after acceptance of the Dark Fiber Transport, NuVox should use the normal trouble reporting process and AT&T will isolate and correct the problem.

6.11.3 AT&T shall make Dark Fiber Transport available in accordance with FCC Rule 51.319 (e)(3). Dark Fiber Transport consists of unactivated optical interoffice transmission facilities existing in aerial or underground structures. After NuVox requests Dark Fiber Transport, AT&T shall provide NuVox with the DB loss report for such Dark Fiber Transport that will reflect the engineered to DB loss.

6.11.4 NuVox may test Dark Fiber Transport obtained from AT&T using CLEC or CLEC designated personnel. AT&T shall provide appropriate interfaces to allow NuVox to test Dark Fiber Transport. For maintenance troubles after acceptance of the Dark Fiber Transport, NuVox should use the normal trouble reporting process and AT&T will isolate and correct the problem to the same engineered to DB loss levels that were met when AT&T originally provisioned the Dark Fiber Transport to NuVox or AT&T shall provide NuVox access to other existing, spare strands of Dark Fiber Transport that meet such engineered to DB loss levels.

6.11.5 **Requirements**

6.11.5.1 AT&T shall make available in a reasonable and nondiscriminatory manner Dark Fiber Transport where it exists in AT&T's network and where, as a result of future building or deployment, it becomes available. Dark Fiber Transport will not be deemed available if (1) it is used by AT&T for maintenance and repair purposes, (2) it is designated for use pursuant to a firm order placed by another customer, (3) it is restricted for use by all carriers, including AT&T, because of transmission problems or because it is scheduled for removal due to documented changes to roads and infrastructure, or (4) AT&T has plans to use the fiber within a two-year planning period. AT&T is not required to place fibers for Dark Fiber Transport if there are none available.

6.11.5.2 NuVox may test the quality of the Dark Fiber Transport to determine its usability and performance specifications.

6.11.5.3 AT&T shall use its best efforts to provide to NuVox information regarding the location, availability and performance of Dark Fiber Transport within ten (10) business days after receiving a request from NuVox. Within such time period, AT&T shall send written confirmation of availability of the Dark Fiber Transport.

6.11.5.4 If the requested Dark Fiber Transport is available, AT&T shall use its commercially reasonable efforts to provision the Dark Fiber Transport to NuVox within twenty (20) business days after NuVox submits a valid, error free LSR. Provisioning includes identification of appropriate connection points (e.g., LGX) to enable NuVox to connect NuVox provided transmission media (e.g., optical fiber) or equipment to the Dark Fiber Transport.

6.11.5.5 If requested dark fiber has any lightwave repeater equipment interspliced to it, AT&T will remove such equipment at NuVox's request subject to time and materials charges.

6.11.5.6 If deployed in AT&T's network, on a case by case basis, AT&T may provide wave division multiplexer ("WDM") applications at rates to be negotiated by the Parties. For WDM applications, AT&T shall provide to NuVox an interface to an existing WDM device or allow NuVox to install its own WDM device (where sufficient system loss margins exist or where NuVox provides the necessary loss compensation) to multiplex the traffic at wavelengths. This applies to both the transmit and the receive ends of the Dark Fiber.

6.11.6 **Transition for Dark Fiber Transport and Dark Fiber Transport Entrance Facilities**

6.11.6.1 For purposes of this Section 6.11.6, the Transition Period for the Embedded Base of Dark Fiber Transport and Embedded Base Dark Fiber Entrance Facilities is the eighteen (18) month period beginning March 11, 2005 and ending September 10, 2006.

6.11.6.2 For purposes of this Section 6.11.6, Embedded Base means Dark Fiber Transport facilities that were in service for NuVox as of March 11, 2005 in those wire centers that, as of such date, met the criteria set forth in Section 6.11.6.3.1 below. For the State of South Carolina, during the Transition Period, NuVox shall be entitled to order and AT&T shall provision moves, changes and additions of Dark Fiber Transport that NuVox orders for the purpose of serving its existing Dark Fiber Transport customers as of March 10, 2005, at such customers' new or existing physical locations, and such facilities shall be included in the Embedded Base. Subsequent disconnects or loss of customers shall be removed from the Embedded Base.

6.11.6.3 Notwithstanding anything to the contrary in this Agreement, AT&T shall make available Dark Fiber Transport meeting the following threshold for NuVox's Embedded Base during the Transition Period:

6.11.6.3.1 Dark Fiber Transport where both wire centers at the end points of the route contain 24,000 or more Business Lines or three (3) or more fiber-based collocators (Tier 2 Wire Center). Except as set forth in Sections 1.7 above and 6.11.7 below, once a wire center meets or exceeds either of the thresholds set forth in this Section 6.11.6.3.1, AT&T will not be required to provide Dark Fiber Transport on that Route. NuVox shall not add new Dark Fiber Entrance Facilities pursuant to the Agreement.

6.11.6.4 A list of wire centers meeting the criteria set forth in Section 6.11.6.3.1 above, as ordered by the Commission in Docket No. 2004-316-C (Initial Wire Center List), is attached to AT&T's Carrier Notification Letter SN91086135, which is available on AT&T's Interconnection Services Web site, and is appended to this Attachment as Exhibit A.

6.11.6.5 Transition Period Pricing. From March 11, 2005 through September 10, 2006, AT&T shall charge a rate for NuVox's Embedded Base of Dark Fiber Transport and Embedded Base Dark Fiber Entrance Facilities equal to 115% of the rate paid by NuVox for those elements on June 15, 2004. The Transition Period rate for Dark Fiber Transport and Dark Fiber Entrance Facilities shall be as set forth in the Pricing Schedule and this Section 6.11.6.5.

6.11.6.6 No later than September 10, 2006, or as soon as practicable thereafter, NuVox shall submit spreadsheet(s) identifying all of the Embedded Base of Dark Fiber Transport and Embedded Base Dark Fiber Entrance Facilities to be either disconnected or converted to other arrangements, as Conversions or Rearrangements, of transitioned to wholesale facilities obtained from other carriers, or to self-provisioned facilities. If NuVox chooses to convert Dark Fiber Transport to special access circuits, will include such Dark Fiber Transport within NuVox's total special access circuits, and will apply any discounts to which NuVox is entitled. The Parties shall negotiate a project schedule for the Conversion of the Embedded Base of Dark Fiber Transport and Dark Fiber Entrance Facilities. Conversions will be subject to the switch-as-is charge set forth in the Pricing Schedule. In the case of disconnection, the applicable disconnect charge set forth in the Agreement shall apply.

6.11.6.7 If NuVox failed to submit the spreadsheet(s) specified in Section 6.11.6.6 above for all of its Embedded Base of Dark Fiber Transport and Dark Fiber Entrance Facilities on or before September 10, 2006, or as soon as practicable thereafter, AT&T will identify NuVox's remaining Embedded Base of Dark Fiber Transport and Dark Fiber Entrance Facilities, if any, and will transition such facilities to the equivalent tariffed AT&T service. Those facilities identified and transitioned by

AT&T shall be subject to all applicable disconnect charges as set forth in the Agreement and the full nonrecurring charges for installation of the equivalent tariffed AT&T service, as set forth in AT&T's tariffs.

6.11.6.8 Notwithstanding any other provision of this Agreement, for the Embedded Base of Dark Fiber Transport and Embedded Base Dark Fiber Entrance Facilities in place after September 11, 2006, the applicable recurring charge for the alternative AT&T service shall apply to each facility as of September 11, 2006.

6.11.6.9 The transition of the Embedded Base of Dark Fiber Transport and Embedded Base Dark Fiber Entrance Facilities must be performed in a manner that avoids, or otherwise, minimizes to the extent possible, disruption or degradation to NuVox's customers' service.

6.11.7 **Subsequent Transition Periods for Dark Fiber Transport**

6.11.7.1 In the event AT&T seeks to designate additional wire centers that meet the criteria set forth in Section 6.11.6.3.1 above, but that were not included in the Initial Wire Center List, AT&T shall provide to NuVox an AL, including AT&T's proposed list of any such additional wire centers (Subsequent Wire Center List), in accordance with the General Terms and Conditions of the Agreement, and AT&T shall post such AL on AT&T's CLEC Online website.

6.11.7.2 Effective ten (10) days after the date of AT&T's AL and Subsequent Wire Center List, AT&T shall not be required to unbundle Dark Fiber Transport in such Subsequent Wire Centers, except pursuant to the self-certification process set forth in Section 1.7 above.

6.11.7.3 For purposes of this Section 6.11.7, AT&T shall make available Dark Fiber Transport facilities that were in service for NuVox in a wire center on the Subsequent Wire Center List as of the tenth (10th) day after the date of AT&T's AL and Subsequent Wire Center List (Subsequent Embedded Base), until ninety (90) days after the date of AT&T's AL and Subsequent Wire Center List (Subsequent Transition Period).

6.11.7.4 Subsequent disconnects or loss of customers shall be removed from the Subsequent Embedded Base.

6.11.7.5 The applicable rate for the Subsequent Embedded Base of Dark Fiber Transport during the Subsequent Transition Period, or until the date on which AT&T converts the Subsequent Embedded Base to alternative AT&T arrangements, whichever is sooner, shall be 115% of the rate set forth in the Pricing Schedule for that element, on the date of AT&T's AL and Subsequent Wire Center List.

6.11.7.6 No later than forty (40) days from the date of AT&T's AL and Subsequent Wire Center List, or as soon as practicable thereafter, NuVox shall submit a

spreadsheet(s) identifying all of the Subsequent Embedded Base of Dark Fiber Transport to be disconnected or converted to other AT&T arrangements, as Conversions or Rearrangements, or transitioned to wholesale facilities obtained from other carriers, or to self-provisioned facilities. If NuVox chooses to convert Dark Fiber Transport to special access circuits, AT&T will include such Dark Fiber Transport within NuVox's total special access circuits, and will apply any discounts to which NuVox is entitled. The Parties shall negotiate a project schedule for the Conversion of the Subsequent Embedded Base. Conversions will be subject to the switch-as-is charge set forth in the Pricing Schedule. In the case of disconnection, the applicable disconnect charge set forth in the Agreement shall apply.

6.11.7.7 If NuVox fails to submit the spreadsheet(s) specified in Section 6.11.7.6 above for all of its Subsequent Embedded Base within forty (40) days after the date of AT&T's AL and Subsequent Wire Center List, or as soon as practicable thereafter, and otherwise fails to dispute AT&T's Subsequent Wire Center List, AT&T will identify NuVox's remaining Subsequent Embedded Base, if any, and will transition such facilities to the equivalent tariffed AT&T service. Those circuits identified and transitioned by AT&T shall be subject to all applicable disconnect charges as set forth in the Agreement and the full nonrecurring charges for installation of the equivalent tariffed AT&T service, as set forth in AT&T's tariffs.

6.11.7.8 AT&T and NuVox agree to resolve all disputes regarding AT&T's Subsequent Wire Center List in a dispute resolution proceeding before the Commission, in accordance with the General Terms and Conditions of the Agreement.

6.11.7.9 Subject to Section 1.7 above, for Subsequent Embedded Base facilities in place after ninety (90) days following the date of AT&T's AL and Subsequent Wire Center List, the applicable recurring charge for the alternative AT&T service shall apply to each facility as of the first day after the end of the Subsequent Transition Period.

6.11.7.10 The Subsequent Embedded Base of Dark Fiber Transport converted by AT&T pursuant to Sections 6.11.7.6and 6.11.7.7 above must be converted in a manner that avoids, or otherwise, minimizes to the extent possible, disruption or degradation to NuVox's customers' service.

6.12 Rearrangements

6.12.1 Rearrangement of a dedicated transport or combination that includes dedicated transport that requires a CFA change: A request to move a working NuVox circuit from one CFA to another NuVox CFA, where both CFAs terminate in the same AT&T Central Office (Change in CFA), shall not constitute the establishment of new service. The applicable rates set forth in the Pricing Schedule shall apply.

6.12.2 Requests to reterminate one end of a facility that is not a Change in CFA constitute the establishment of new service and require disconnection of existing service and the applicable rates set forth in the Pricing Schedule shall apply.

6.12.3 Upon request of NuVox, AT&T shall project manage the Change in CFA or retermination of Dedicated Transport and combinations that include transport as described in Sections 6.12.1 and 6.12.2 above. NuVox may request OC-TS for such orders, and such OC-TS will be available at times designated by NuVox twenty-four (24) hours a day, seven (7) days a week except on National Holidays.

6.12.4 AT&T shall accept a LOA between NuVox and another carrier that will allow NuVox to connect Dedicated Transport or Combination that includes Dedicated Transport to the other carrier's collocation space or to another carrier's CFA.

6.12.5 Rearrangement of an EEL to a standalone UNE-L that requires a CFA change: NuVox may utilize the EEL to UNE-L retermination process, as described in AT&T's EEL to UNE-L Re-Termination CLEC Information Package, available at AT&T's CLEC Online website, to disconnect an EEL circuit and reterminate the loop portion of the former EEL circuit to a collocation arrangement in the customer Serving Wire Center as a standalone UNE-L. When using this process, the existing loop portion of the EEL will be re-used and the resulting standalone loop will be subject to the rates, terms and conditions for that particular loop as set forth in this Attachment. This process will apply only to EELs that include as a part of its combination a DS1 Loop, UVL-SL2 Loop, 4-Wire UDL loop (64, 56 kbs) and a 2-Wire ISDN Loop.

6.12.6 AT&T shall charge the applicable EEL to UNE-L retermination rates found in the Pricing Schedule. NuVox shall also be charged applicable service order, collocation cross-connect and EEL disconnect charges, where such charges have not already been paid by NuVox, as set forth in the Pricing Schedule.

6.12.7 The EEL to UNE-L retermination process is not available when the rearrangement requires a dispatch outside the serving wire center where the loop terminates. If an outside dispatch is required, or if NuVox elects not to utilize the EEL to UNE-L retermination process, NuVox must submit an LSR to disconnect the entire EEL circuit, and must submit a separate LSR for the requested standalone loop. In such cases, NuVox will be charged the EEL disconnect charges, where such charges have not already been paid by NuVox, and the full nonrecurring rates for installation of a new loop, as set forth in the Pricing Schedule.

7. Automatic Location Identification/Data Management System (ALI/DMS)

7.1 911 and E911 Databases

7.1.1 AT&T shall provide NuVox with nondiscriminatory access to 911 and E911 databases on an unbundled basis, in accordance with 47 C.F.R. § 51.319 (f).

7.1.2 The ALI/DMS database contains end user information (including name, address, telephone information, and sometimes special information from the local service provider or customer) used to determine to which PSAP to route the call. The ALI/DMS database is used to provide enhanced routing flexibility for E911. NuVox will be required to provide AT&T with daily updates to E911 database.

7.1.3 NuVox also shall be responsible for providing AT&T with complete and accurate data for submission to the 911/E911 database for the purpose of providing 911/E911 service to NuVox's end users.

7.2 Technical Requirements

7.2.1 AT&T shall provide NuVox the capability of providing updates to the ALI/DMS database through a specified electronic interface.

7.2.2 AT&T shall provide error reports from the ALI/DMS database to NuVox after NuVox provides customer information for input into the ALI/DMS database.

7.2.3 NuVox shall conform to the National Emergency Number Association (NENA) recommended standards for LNP and updating the AL/DMS database.

7.3 911 PBX Locate Service®.

7.3.1 911 PBX Locate Service is comprised of a database capability and a separate transport component.

7.3.2 Description of Product. The transport component provides a dedicated trunk path from a Private Branch Exchange (PBX) switch to the appropriate AT&T 911 tandem.

7.3.2.1 The database capability allows NuVox to offer an E911 service to its PBX customers that identifies to the PSAP the physical location of the NuVox PBX 911 end user station telephone number for the 911 call that is placed by the end user.

7.3.2.2 NuVox may order either the database capability or the transport component as desired or NuVox may order both components of the service.

7.3.3 911 PBX Locate Database Capability. NuVox's customer or NuVox's customer's database management agent (DMA) must provide the end user PBX station telephone numbers and corresponding address and location data to AT&T's 911 database vendor. The data will be loaded and maintained in AT&T's ALI database.

7.3.3.1 Ordering, provisioning, testing and maintenance shall be provided by NuVox pursuant to the 911 PBX Locate Marketing Service Description (MSD) that is located on the AT&T Interconnection website.

7.3.3.2 NuVox's customer, or NuVox's customer database management agent must provide ongoing updates to AT&T's 911 database vendor within a commercially reasonable timeframe of all PBX station telephone number adds, moves and deletions. It will be the responsibility of NuVox to ensure that the customer or DMA maintain the data pertaining to each customer's extension managed by the 911 PBX Locate Service product. NuVox should not submit telephone number updates for specific PBX station telephone numbers that are submitted by NuVox's customer, or NuVox's customer DMA under the terms of the 911 PBX Locate product.

7.3.3.3 NuVox must provision all PBX station numbers in the same LATA as the E911 tandem.

7.3.4 NuVox agrees to release, indemnify, defend and hold harmless AT&T from any and all loss, claims, demands, suits, or other action, or any liability whatsoever, whether suffered, made, instituted or asserted by NuVox's customer or by any other party or person, for any personal injury to or death of any person or persons, or for any loss, damage or destruction of any property, whether owned by NuVox or others, or for any infringement or invasion of the right of privacy of any person or persons, caused or claimed to have been caused, directly or indirectly, by the installation, operation, failure to operate, maintenance, removal, presence, condition, location or use of PBX Locate Service features or by any services which are or may be furnished by AT&T in connection therewith, including but not limited to the identification of the telephone number, address or name associated with the telephone used by the party or parties accessing 911 services using 911 PBX Locate Service hereunder, except to the extent caused by AT&T's gross negligence or wilful misconduct. NuVox is responsible for assuring that its authorized customers comply with the provisions of these terms and that unauthorized persons do not gain access to or use the 911 PBX Locate Service through user names, passwords, or other identifiers assigned to NuVox's customer or DMA pursuant to these terms. Specifically, NuVox's customer or DMA must keep and protect from use by any unauthorized individual identifiers, passwords, and any other security token(s) and devices that are provided for access to this product.

7.3.5 NuVox may only use AT&T PBX Locate Service solely for the purpose of validating and correcting 911 related data for NuVox's customer's telephone numbers for which it has direct management authority.

7.3.6 911 PBX Locate Transport Component. The 911 PBX Locate Service transport component requires NuVox to order a CAMA type dedicated trunk from NuVox's

customer premise to the appropriate AT&T 911 tandem pursuant to the following provisions.

7.3.6.1 Except as otherwise set forth below, a minimum of two (2) customer specific, dedicated 911 trunks are required between the NuVox's customer premise and the AT&T 911 tandem as described in AT&T's TR-73576 and in accordance with the 911 PBX Locate Marketing Service Description located on the AT&T Interconnection website. NuVox is responsible for connectivity between the customer's PBX and NuVox's switch or POP location. NuVox will then order 911 trunks from their switch or POP location to the AT&T 911 tandem. The dedicated trunks shall be, at a minimum, DS0 level trunks configured as part of a digital interface (delivered over a NuVox purchased DS1 facility that hands off at a DS1 or higher level digital or optical interface). NuVox is responsible for ensuring that the PBX switch is capable of sending the calling station's Direct Inward Dial (DID) telephone number to the AT&T 911 tandem in a specified Multi-frequency (MF) Address Signaling Protocol. If the PBX switch supports Primary Rate ISDN (PRI) and the calling stations are DID numbers, then the 911call can be transmitted using PRI, and there will be no requirement for the PBX Locate Transport component.

7.3.7 Ordering and Provisioning. NuVox will submit an Access Service Request (ASR) to AT&T to order a minimum of two (2) customer specific 911 trunks from its switch or POP location to the AT&T 911 tandem.

7.3.8 Testing and maintenance shall be provided by NuVox pursuant to the 911 PBX Locate Marketing Service description that is located on the AT&T Interconnection website.

7.3.9 Rates. Rates for the 911 PBX Locate Service database component are set forth in the Pricing Schedule. Trunks and facilities for 911 PBX Locate transport component may be ordered by NuVox pursuant to the terms and conditions set forth in Attachment 3.

8. Operational Support Systems (OSS)

8.1 AT&T shall provide NuVox with nondiscriminatory access to operations support systems on an unbundled basis, in accordance with 47 CFR 51.319(g) and as set forth in Attachment 6. Operations support system ("OSS") functions consist of pre-ordering, ordering, provisioning, maintenance and repair, and billing functions supported by AT&T's databases and information. AT&T, as part of its duty to provide access to the pre-ordering function, shall provide NuVox with nondiscriminatory access to the same detailed information about the loop that is available to AT&T.

8.2 Cancellation OSS Charge

8.2.1 NuVox will incur an OSS charge for an accepted LSR that is later canceled.

8.2.2 Supplements or clarifications to a previously billed LSR will not incur another OSS charge.

8.3 Network Elements and Other Services Manual Additive

8.3.1 The Commissions in some states have ordered per element manual additive nonrecurring charges (NRC) for Network Elements and Other Services ordered by means other than one of the interactive interfaces. These ordered Network Elements and Other Services manual additive NRCs will apply in these states, rather than the charge per LSR. The per element charges are listed in the Pricing Schedule.

				December 2004 Data with FBC count as of Dec 5			
				Interoffice Transport		**High Capacity Loops**	
State	**Wire Center**	**Total Business Lines**	**Number of FB Collocators if 3 or Greater**	**Tier 1**	**Tier 2**	**No Impairment for DS3**	**No Impairment for DS1**
SC	CHTNSCDT	24,703	5	X			
SC	CHTNSCNO	24,107			X		
SC	CLMASCSA	13,939	3		X		
SC	CLMASCSN	48,403	5	X		X	
SC	GNVLSCDT	45,546	5	X		X	
SC	GNVLSCWR	33,639			X		
SC	MNPLSCES	24,061			X		
SC	SPBGSCMA	22,796	3		X		

Attachment 3

Network Interconnection

TABLE OF CONTENTS

1. GENERAL 3

2. DEFINITIONS: (FOR THE PURPOSE OF THIS ATTACHMENT) 3

3. NETWORK INTERCONNECTION 5

4. INTERCONNECTION TRUNK GROUP ARCHITECTURES 9

5. NETWORK DESIGN AND MANAGEMENT FOR INTERCONNECTION 16

6. SIGNALING 17

7. FORECASTING FOR TRUNK PROVISIONING 25

8. TRUNK UTILIZATION 26

9. INTERFERENCE OR IMPAIRMENT 28

10. COMPENSATION FOR CALL TRANSPORT AND TERMINATION FOR LOCAL TRAFFIC AND ISP-BOUND TRAFFIC. 30

11. BASIC 911 AND E911 INTERCONNECTION 38

12. FRAME RELAY SERVICE INTERCONNECTION 39

Basic Architecture	**Exhibit A**
One Way Architecture	**Exhibit B**
Two Way Architecture	**Exhibit C**
Supergroup Architecture	**Exhibit D**
AT&T SE Jurisdictional Factors Reporting Guide	**Exhibit E**

NETWORK INTERCONNECTION

1. GENERAL

1.1 The Parties shall provide interconnection with each other's networks for the transmission and routing of telephone exchange service and exchange access on the following terms:

2. DEFINITIONS: (FOR THE PURPOSE OF THIS ATTACHMENT)

2.1 For purposes of this attachment only, the following terms shall have the definitions set forth below:

2.1.1 **Automatic Location Identification ("ALI")** is a feature by which the address associated with the calling party's telephone number is forwarded to the PSAP for display. Access to the ALI database is described in Attachment 2 to this Agreement.

2.1.2 **Automatic Number Identification ("ANI")** corresponds to the seven (7)/ten (10)-digit telephone number assigned by the serving local exchange carrier.

2.1.3 **Basic 911 Service ("B911")** routes a 9-1-1 call to one (1) centralized answering location.

2.1.4 **Call Termination** has the meaning set forth for "termination" in 47 CFR § 51.701(d).

2.1.5 **Call Transport** has the meaning set forth for "transport" in 47 CFR § 51.701(c).

2.1.6 **Call Transport and Termination** is used collectively to mean the switching and transport functions from the Interconnection Point to the last point of switching.

2.1.7 **Common ("Shared") Transport** is defined as the transport of the originating Party's traffic by the terminating Party over the terminating Party's common (shared) facilities between (1) the terminating Party's tandem switch and end office switch, (2) between the terminating Party's tandem switches, and/or (3) between the terminating Party's host and remote end office switches. All switches referred to herein must be registered in the Local Exchange Routing Guide ("LERG").

2.1.8 **Cross Connect** is as defined in Attachment 4 of the Interconnection Agreement. If a Party provisions a cross connect for the purposes of interconnection under this Attachment 3, and such cross connect is not associated with a physical or virtual collocation arrangement, the provisioning party shall not charge for such cross connect.

2.1.9 **Dedicated Interoffice Facility** is defined as a switch transport facility between a Party's Serving Wire Center and the first point of switching within the LATA on the other Party's network.

2.1.10 **End Office Switching** is defined as the function that establishes a communications path between the trunk side and line side of the End Office switch.

2.1.11 **Enhanced 911 Service** routes a 9-1-1 call to one (1) centralized answering location and provides features not present in Basic 911 Service, including ANI and ALI and Selective Routing.

2.1.12 **Fiber Meet** is an interconnection arrangement whereby the Parties physically interconnect their networks via an optical fiber interface at which one (1) Party's facilities, provisioning, and maintenance responsibility begins and the other Party's responsibility ends.

2.1.13 **Interconnection Point ("IP")** is a physical telecommunications equipment interface that interconnects the networks of AT&T and NuVox.

2.1.14 **ISP-Bound Traffic** is calls to an information service provider/enhanced service provider or Internet service provider ("ISP") that are dialed by using a local dialing pattern (7 or 10 digits).

2.1.15 **Local Channel** is defined as a switched transport facility between a Party's Point of Presence and its designated Serving Wire Center where the Point of Presence is not located within the designated Serving Wire Center.

2.1.16 **Local Traffic** is defined as any traffic that is originated by a customer of one (1) Party and is terminated to a customer of the other Party within a given LATA on that other Party's network, except for those calls that are originated or terminated through switched access arrangements. Additionally, Local Traffic includes any cross boundary, intrastate, interLATA or interstate interLATA calls established as a local call by the ruling regulatory body.

2.1.17 A **Point of Presence** is the physical location at which a Party establishes itself for obtaining access to the other Party's network.

2.1.18 **Public Safety Answering Point ("PSAP")** is the answering location for 911 calls.

2.1.19 **Reciprocal Trunk Group** is defined as a one-way trunk group carrying AT&T originated traffic to be terminated by NuVox.

2.1.20 **Selective Routing ("SR")** is a standard feature that routes an E911 call from the 9-1-1 tandem to the designated PSAP based upon the address of the ANI of the calling party.

2.1.21 **Serving Wire Center** is defined as the wire center owned or leased by one (1) Party that is designated by that Party to serve the geographic area in which the other Party's POP is located.

2.1.22 **Tandem Switching** is defined as the function that establishes a communications path between two (2) switching offices through a third switching office through the provision of trunk side to trunk side switching.

2.1.22.1 Consistent with FCC rules and orders, a NuVox switch shall be considered a tandem switch if it serves a geographic area comparable to that served by the relevant AT&T tandem switch. NuVox shall provide to AT&T supporting data to show such geographic comparability and if the Parties are unable to agree then the issue shall be resolved pursuant to the Dispute Resolution process set forth in the General Terms and Conditions of this Agreement.

2.1.23 **Transit Traffic** is traffic originating on one (1) Party's network that is switched and/or transported by the other Party and delivered to a third party's network, or traffic originating on a third party's network that is switched and/or transported by one (1) Party and delivered to the other Party's network.

3. NETWORK INTERCONNECTION

3.1 This Attachment pertains only to the provision of network interconnection where NuVox owns, leases from a third party or otherwise provides its own switch(es).

3.2 Network interconnection may be provided by the Parties via any technically feasible method and at any technically feasible point or points in accordance with applicable FCC and Commission rules and orders. In accordance with the terms of this Agreement, network interconnection may be provided via a DS0 where technically feasible and supported by applicable industry standards. Requests for interconnection via methods, such as OCn level interconnection, other than as set forth in this Attachment may be made through the Bona Fide Request ("BFR") process set out in Attachment 11 to this Agreement.

3.2.1 Requests for interconnection at a point or points other than as set forth in this Attachment may be made through the BFR process set out in Attachment 11 to this Agreement. At such time that AT&T submits a request for interconnection that meets the requirements of this Section 3.2; the Parties will negotiate the rates, terms, and conditions for such request.

3.2.2 Each Party is responsible for providing, engineering and maintaining the network on its side of the IP. The IP must be located within AT&T's serving territory on AT&T's network, or as otherwise mutually agreed by the Parties, in the LATA in

which traffic is originating. The IP determines the point at which the originating Party shall pay the terminating Party for the Call Transport and Termination of Local Traffic and ISP-Bound Traffic.

3.2.3 Pursuant to the provisions of this Attachment, the Parties will endeavor in good faith to mutually agree on the location of the initial IP(s) in a given LATA. Both Parties will act in good faith and shall consider points that are efficient for both Parties. If the Parties are unable to agree on the location of the initial IP, in accordance with the terms and conditions set forth in this Attachment each Party may designate a single IP in the LATA for the delivery of Transit Traffic, Local Traffic originated by the other Party and ISP-bound Traffic originated by the other Party. AT&T will not request the establishment of an IP where physical or virtual collocation space is not available or where AT&T fiber connectivity is not available.

3.2.4 Additional IP(s) in a LATA may be established by mutual agreement of the Parties. Unless mutually agreed otherwise, an additional IP must be established if the following criteria are satisfied: (1) the traffic between NuVox and AT&T at the proposed additional IP must exceed 8.9 million minutes of Local Traffic and ISP-Bound Traffic per month for three (3) consecutive months; and (2) any end office to be designated as an additional IP must be more than twenty (20) miles from an existing IP. AT&T will not request the establishment of an IP where physical or virtual collocation space is not available or where AT&T fiber connectivity is not available.

3.2.5 Upon written notification from the Party requesting the establishment of an additional IP, the receiving Party has twenty (20) business days to analyze, respond to, and negotiate in good faith regarding the establishment of such IP. Should the Parties disagree on how to proceed, the requesting Party may resort to the Dispute Resolution process set forth in the General Terms and Conditions.

3.2.6 When the Parties agree to utilize two-way interconnection trunk groups for the exchange of Local Traffic and ISP-bound Traffic the Parties must agree to the location of the IP(s).

3.2.7 Notwithstanding any other provision of this Attachment and subject to the requirements for installing additional IPs, as set forth above, any IPs existing prior to the Effective Date of the Agreement will be accepted as initial IPs. AT&T will not require re-grooming however; NuVox may regroom and augment such IPs.

3.3 **Interconnection via Dedicated Facilities**

3.3.1 With the exception of Transit Traffic, the Parties shall institute a “bill and keep” compensation plan under which neither Party will charge the other Party recurring

and nonrecurring charges for trunks (one-way or two-way), trunk ports and associated dedicated facilities for the exchange of Local Traffic (non-transit) and ISP-bound Traffic (non-transit), and 911 traffic. The appropriate rate elements that are subject to this "bill and keep" compensation plan are set forth in the Pricing Schedule. Each Party has the obligation to install and maintain the appropriate trunks, trunk ports and associated facilities on its respective side of the IP and is responsible for bearing its costs for such trunks, trunk ports and associated facilities on its side of the IP. Both Parties, as appropriate, shall be compensated for the ordering of trunks, trunk ports and facilities used exclusively for Transit Traffic and for ancillary traffic types including, but not limited to, OS/DA. The Parties agree that charges for such trunks, trunk ports and facilities are as set forth in the Pricing Schedule or to the extent a rate associated with the interconnecting trunk group is not set forth in the Pricing Schedule, the rate shall be as set forth in the appropriate Party's tariff as filed and effective with the FCC or Commission, or reasonable and non-discriminatory web-posted listing if the FCC or Commission does not require filing of a tariff.

3.3.2 Local Channel Facilities. In lieu of providing facilities on its side of Interconnection Point or as part of Call Transport and Termination, either Party may purchase Local Channel facilities from the other Party, pursuant to the provisions of this Attachment, where such facilities are available. The percentage of Local Channel Facilities utilized for Local Traffic and ISP-bound Traffic shall be determined based upon the application of the Percent Local Facility ("PLF") Factor on a statewide basis. The charges applied to the percentage of Local Channel facilities used for Local Traffic and ISP-bound Traffic as determined by the PLF are set forth in Section 3.3.1 above. The remaining percentage of Local Channel Facilities shall be billed at the appropriate Party's intrastate or interstate tariff rates for switched access services or reasonable and non-discriminatory web-posted listing if the FCC or Commission does not require filing of a tariff.

3.3.3 Dedicated Interoffice Facilities. In lieu of providing facilities on its side of Interconnection Point or as part of Call Transport and Termination, either Party may purchase Dedicated Interoffice facilities from the other Party, pursuant to the provisions of this Attachment, where such facilities are available. The percentage of Dedicated Interoffice Facilities utilized for Local Traffic and ISP-bound Traffic shall be determined based upon the application of the PLF Factor on a statewide basis. The charges applied to the percentage of Dedicated Interoffice facilities used for Local Traffic and ISP-bound Traffic as determined by the PLF are set forth in Section 3.3.1 above. The remaining percentage of the Dedicated Interoffice Facilities shall be billed at the appropriate Party's intrastate or interstate tariff rates for switched access services or reasonable and non-discriminatory web-posted listing if the FCC or Commission does not require filing of a tariff.

3.3.4 In the event that a Party's point of presence is located within its designated Serving Wire Center, such Party may interconnect to the other Party's switch located in the same Serving Wire Center via a cross connect as defined in this Agreement or such Party may interconnect via any other technically feasible method as described herein. If a Party provisions a cross connect for the purposes of interconnection under this Attachment 3, and such cross connect is not associated with a physical or virtual collocation arrangement, the provisioning party shall not charge for such cross connect. When a cross connect is made in the provisioning of Local Interconnection facilities/services, the providing Party will not charge the other Party a Local Channel Facility rate for such cross connect.

3.3.5 The facilities and associated components as set forth in the Pricing Schedule purchased pursuant to this Section 3 shall be ordered via the Access Service Request ("ASR") process. The terms, conditions and rates for ordering charges (i.e., expedite, cancellation, and order modification charges) are as set forth in the AT&T FCC Tariff No. 1. To the extent that AT&T requests that NuVox submit an ASR for an augmentation to the facilities purchased by NuVox from AT&T but utilized for AT&T's originated traffic, the Parties will work in good faith and make best efforts to ensure that the ASR submitted for such augmentations does not require expedition, cancellation or modification and in the event that NuVox incurs ordering charges, AT&T and NuVox shall work cooperatively to determine which Party caused the incurrence of such charges and that Party shall be responsible for such charges.

3.4 **Fiber Meet**

3.4.1 If NuVox elects to establish interconnection with AT&T pursuant to a Fiber Meet Local Channel, NuVox and AT&T shall jointly engineer, operate and maintain a Synchronous Optical Network ("SONET") transmission system by which they shall interconnect their transmission and routing of Local Traffic via a Local Channel at either the DS0, DS1, or DS3 level. The Parties shall work jointly to determine the specific transmission system. However, NuVox's SONET transmission system must be compatible with AT&T's equipment, and the Data Communications Channel ("DCC") must be turned off, unless otherwise mutually agreed to by the Parties.

3.4.2 Each Party, at its own expense, shall procure, install and maintain the agreed upon SONET transmission system in its network.

3.4.3 The Parties shall agree to a Fiber Meet point between the AT&T Serving Wire Center and the NuVox Serving Wire Center. The Parties shall deliver their fiber optic facilities to the Fiber Meet point with sufficient spare length to reach the fusion splice point for the Fiber Meet Point. AT&T shall, at its own expense, provide and maintain the fusion splice point for the Fiber Meet. A building type

Common Language Location Identification ("CLLI") code will be established for each Fiber Meet point. All orders for interconnection facilities from the Fiber Meet point shall indicate the Fiber Meet point as the originating point for the facility.

3.4.4 Upon verbal request by NuVox and within a reasonable and non-discriminatory timeframe, AT&T shall allow NuVox access to the fusion splice point for the Fiber Meet point for maintenance purposes on NuVox's side of the Fiber Meet point.

3.4.5 Neither Party shall charge the other for its Local Channel portion of the Fiber Meet facility used for Local Traffic and ISP-bound Traffic. The remaining portion of the Local Channel shall be billed at the appropriate Party's intrastate or interstate tariff rates for switched access services or reasonable and non-discriminatory web-posted listing if the FCC or Commission does not require filing of a tariff.

4. INTERCONNECTION TRUNK GROUP ARCHITECTURES

4.1 AT&T and NuVox shall establish interconnecting trunk groups and trunk group configurations between networks, including the use of one-way or two-way trunks in accordance with the following provisions set forth in this Attachment**.** For trunking purposes, traffic will be routed based on the digits dialed by the originating customer and in accordance with the LERG.

4.2 NuVox shall establish an interconnection trunk group(s) to at least one (1) AT&T access tandem within the LATA for the delivery of NuVox's originated Local Traffic, ISP-bound Traffic and IntraLATA Toll Traffic and for the receipt and delivery of Transit Traffic. To the extent NuVox desires to deliver Local Traffic, ISP-bound Traffic, IntraLATA Toll Traffic and/or Transit Traffic to AT&T access tandems within the LATA, other than the tandems(s) to which NuVox has established interconnection trunk groups, NuVox shall order Multiple Tandem Access, as described in this Attachment, to such other AT&T access tandems.

4.2.1 Notwithstanding the forgoing, NuVox shall establish an interconnection trunk group(s) to all AT&T access and local tandems in the LATA where NuVox has homed (i.e., assigned) its NPA/NXXs. NuVox shall home its NPA/NXXs on the AT&T tandems that serve the exchange rate center areas to which the NPA/NXXs are assigned. The specified exchange rate center assigned to each AT&T tandem is defined in the LERG. NuVox shall enter its NPA/NXX access and/or local tandem homing arrangements into the LERG.

4.3 Switched access traffic will be delivered to and from Interexchange Carriers ("IXCs") based on NuVox's NXX access tandem homing arrangement as specified by NuVox in the LERG.

4.4 Any NuVox interconnection request that (1) deviates from the interconnection trunk group architectures as described in this Agreement, (2) affects traffic delivered to NuVox from an AT&T switch and (3) requires special AT&T switch translations and other network modifications will require NuVox to follow the procedures set forth in Attachment 11 to this Agreement. At such time that AT&T submits a request for interconnection that meets the requirements of this Section 4; the Parties will negotiate the rates, terms, and conditions for such request.

4.5 Unless the Parties mutually agree otherwise, NuVox shall be responsible for ordering and paying for any two-way trunks carrying Transit Traffic. At such time as NuVox is providing the transit function for fifteen percent (15%) or more of all Transit Traffic, NuVox will provide AT&T with notification and supporting documentation that such threshold has been met. Within fifteen (15) days following AT&T's receipt of such notification and documentation, the Parties will begin negotiations for an alternative compensation arrangement for such two-way trunks carrying Transit Traffic. If the Parties are unable to agree to an alternative compensation arrangement within forty-five (45) days of AT&T's receipt of notification, then the Parties shall mutually agree to extend the negotiations or, absent mutual agreement, the Parties shall refer to the Dispute Resolution procedure set forth in this Agreement. Upon agreement of such alternative compensation arrangement, the Parties shall execute an amendment implementing such alternative compensation for two-way trunks carrying Transit Traffic and the Parties shall "true-up" such arrangement to the date AT&T received notification.

4.6 All trunk groups will be provisioned as Signaling System 7 ("SS7") capable where technically feasible. If SS7 is not technically feasible, multi-frequency ("MF") protocol signaling shall be used.

4.7 In cases where NuVox is also an IXC, the IXC's Feature Group D ("FG D") trunk group(s) must remain separate from the local interconnection trunk group(s).

4.8 One-Way Interconnection Trunks and Trunk Groups. Each Party shall order one-way interconnection trunks and trunk groups, including trunk and trunk group augmentations, via the ASR process. A Firm Order Confirmation ("FOC") shall be returned to the ordering Party, after receipt of a valid, error free ASR, within the timeframes set forth in Attachment 6, if applicable. Notwithstanding the foregoing, blocking situations and projects shall be project managed through AT&T's Carrier Interconnection Switching Center ("CISC") Project Management Group and NuVox's equivalent trunking group and FOCs for such orders shall be returned in the timeframes negotiated by the Parties and suitable to the project. No additional charges shall be triggered due to the involvement of such project management. A project is defined as (1) a new trunk group (excluding augments to existing routes) or (2) a request for more than ninety-six (96) trunks on a single or multiple group(s) in a given AT&T local calling area.

4.9 Two-Way Interconnection Trunks and Trunk Groups. Upon mutual agreement of the Parties, the Parties' shall exchange Local Traffic and ISP-Bound Traffic, and Transit Traffic, where applicable, on two-way interconnection trunk group(s) with the quantity of trunks being mutually determined and the provisioning being jointly coordinated. Furthermore, the Parties shall agree upon the IP(s) for two-way interconnection trunk groups transporting both Parties' Local Traffic, ISP-Bound Traffic and Transit Traffic, where applicable, consistent with Section 3 above. Upon determination by the Parties in a joint planning meeting that such trunk groups shall be utilized, NuVox shall order such two-way trunks, and any subsequent trunk and trunk group augmentations, via the ASR process. AT&T will use the Trunk Group Service Request ("TGSR") and/or submit a request to NuVox via email or phone (with e-mail confirmation) to request changes in trunking to NuVox's two-way trunk groups carrying AT&T originated traffic. A FOC shall be returned to the ordering Party, after receipt of a valid, error free ASR, within the applicable timeframes as set forth in Attachment 6, if applicable. Notwithstanding the foregoing, blocking situations and projects shall be project managed through AT&T's CISC Project Management Group and NuVox's equivalent trunking group and FOCs for such orders shall be returned in the timeframes negotiated by the Parties and suitable to the project. No additional charges shall be triggered due to the involvement of such project management. A project is defined as (1) a new trunk group (excluding augments to existing routes) or (2) a request for more than ninety-six (96) trunks on a single or multiple group(s) in a given AT&T local calling area. Furthermore, the Parties shall jointly review trunk performance and forecasts on a periodic basis, as set forth in Section 7 of this Attachment. The Parties' use of two-way interconnection trunk groups for the transport of Local Traffic, ISP-Bound Traffic and Transit Traffic, where applicable, between the Parties does not preclude the Parties from mutually agreeing to establish additional one-way interconnection trunks for the delivery of either Party's originated Local Traffic, ISP-Bound Traffic, and Transit Traffic to the other Party where necessary, however, the proposal to establish such one-ways will be discussed by the parties prior to the submission of an ASR.

4.10 **AT&T Access Tandem Interconnection**

4.10.1 Interconnection at a single access tandem provides access to those end offices subtending that access tandem ("Intratandem Access"). Access tandem interconnection is available for any of the following access tandem architectures.

4.10.2 **Basic Architecture**

In the Basic Architecture, NuVox's originating Local Traffic, ISP-bound Traffic and IntraLATA Toll Traffic and originating and terminating Transit Traffic is transported on a single two-way trunk group between NuVox and AT&T access tandem(s) within a LATA to provide Intratandem Access. This trunk group

carries Transit Traffic between NuVox and Independent Companies, Interexchange Carriers, other CLECs, and CMRS providers that have a Meet Point Billing arrangement with AT&T, and other network providers with which NuVox desires to exchange traffic. This trunk group also carries NuVox originated Transit Traffic transiting a single AT&T access tandem destined to third party tandems such as an Independent Company tandem or other CLEC tandem. AT&T originated Local Traffic, ISP-bound Traffic and IntraLATA Toll Traffic is transported on a separate single one-way trunk group terminating to NuVox. Other trunk groups for operator services, directory assistance, and intercept may be established pursuant to the applicable AT&T tariff if service is requested. The LERG shall be referenced for current routing and tandem serving arrangements. The Basic Architecture is illustrated in Exhibit A.

4.10.3 **One-Way Trunk Group Architecture**

In One-Way Trunk Group architecture, the Parties interconnect using three (3) separate trunk groups. A one-way trunk group provides Intratandem Access for NuVox-originated Local Traffic, ISP-bound Traffic and IntraLATA Toll Traffic destined for AT&T customers. A second one-way trunk group carries AT&T-originated Local Traffic, ISP-bound Traffic and IntraLATA Toll Traffic destined for NuVox customers. A two-way trunk group provides Intratandem Access for NuVox's originating and terminating Transit Traffic. This trunk group carries Transit Traffic between NuVox and Independent Companies, Interexchange Carriers, other CLECs, CMRS providers that have a Meet Point Billing arrangement with AT&T, and other network providers with which NuVox desires to exchange traffic. This trunk group also carries NuVox originated Transit Traffic transiting a single AT&T access tandem destined to third party tandems such as an Independent Company tandem or other CLEC tandem. AT&T originated Local Traffic, ISP-bound Traffic and IntraLATA Toll Traffic is transported on a separate single one-way trunk group terminating to NuVox. Other trunk groups for operator services, directory assistance, and intercept may be established pursuant to the applicable AT&T tariff if service is requested. The LERG contains current routing and tandem serving arrangements. The one-way trunk group architecture is illustrated in Exhibit B.

4.10.4 **Two-Way Trunk Group Architecture**

The Two-Way Trunk Group Architecture establishes one (1) two-way trunk group to provide Intratandem Access for the exchange of Local Traffic, ISP-bound Traffic and IntraLATA Toll Traffic between NuVox and AT&T. In addition, a separate two-way transit trunk group must be established for NuVox's originating and terminating Transit Traffic. This trunk group carries Transit Traffic between NuVox and Independent Companies, Interexchange Carriers, other CLECs, CMRS providers that have a Meet Point Billing arrangement with AT&T, and other network providers with which NuVox desires to exchange traffic. This trunk group also carries NuVox originated Transit Traffic transiting a single AT&T access tandem destined to third party tandems such as an

Independent Company tandem or other CLEC tandem. Either Party's originated traffic, may, in order to prevent or remedy a traffic blocking situations, be transported on a separate single one-way trunk group terminating to the other Party. However, where NuVox is responsive in a timely manner to AT&T's transport needs for its originated traffic, AT&T originating traffic will be placed on the two-way Local Traffic trunk group carrying ISP-bound Traffic and IntraLATA Toll Traffic. Other trunk groups for operator services, directory assistance, and intercept may be established pursuant to the applicable AT&T tariff if service is requested. The LERG contains current routing and tandem serving arrangements. The two-way trunk group architecture is illustrated in Exhibit C.

4.10.5 **Supergroup Architecture**

In the Supergroup Architecture, the Parties' Local Traffic, ISP-bound Traffic and IntraLATA Toll Traffic and NuVox's Transit Traffic are exchanged on a single two-way trunk group between NuVox and AT&T to provide Intratandem Access to NuVox. This trunk group carries Transit Traffic between NuVox and Independent Companies, Interexchange Carriers, other CLECs, CMRS providers that have a Meet Point Billing arrangement with AT&T, and other network providers with which NuVox desires to exchange traffic. This trunk group also carries NuVox originated Transit Traffic transiting a single AT&T access tandem destined to third party tandems such as an Independent Company tandem or other CLEC tandem. Either Party's originated traffic, may, in order to prevent or remedy a traffic blocking situations, be transported on a separate single one-way trunk group terminating to the other Party. However, where NuVox is responsive in a timely manner to AT&T's transport needs for its originated traffic; AT&T originating traffic will be placed on the Supergroup. Other trunk groups for operator services, directory assistance, and intercept may be established pursuant to the applicable AT&T tariff if service is requested. The LERG shall be referenced for current routing and tandem serving arrangements. The Supergroup architecture is illustrated in Exhibit D.

4.10.6 **Multiple Tandem Access Interconnection**

4.10.6.1 AT&T Multiple Tandem Access ("MTA") provides for LATA wide AT&T transport and termination of NuVox's-originated Local Traffic and ISP-bound Traffic transported by AT&T by establishing an interconnection trunk group at a AT&T access tandem with routing through multiple AT&T access tandems as required. NuVox must also establish an interconnection trunk group(s) at all AT&T access tandems where NuVox NXXs are homed as described in Section 4.2.1 above. If NuVox does not have NXXs homed at any particular AT&T access tandem within a LATA and elects not to establish an interconnection trunk group(s) at such AT&T access tandem, NuVox can order MTA in each AT&T access tandem within the LATA where it does have an interconnection trunk group(s) and AT&T will terminate NuVox's Local Traffic, ISP-bound Traffic and

IntraLATA Toll Traffic to customers served through those AT&T access tandems where NuVox does not have an interconnection trunk group(s).

4.10.6.2 NuVox may also utilize MTA to route its originated Transit Traffic; provided, however, that MTA may not be utilized to route switched access traffic that transits the AT&T network to an IXC. Switched access traffic originated by or terminated to NuVox will be delivered to and from IXCs based on NuVox's NXX access tandem homing arrangement as specified by NuVox in the LERG.

4.10.6.3 Compensation for MTA shall be at the applicable tandem switching and transport charges specified in the Pricing Schedule and shall be billed in addition to any other applicable Call Transport and Termination charges. The Multiple Tandem Access rate element set forth in the Pricing Schedule applies to the initial tandem only.

4.10.6.4 To the extent NuVox does not purchase MTA in a LATA served by multiple access tandems, NuVox must establish an interconnection trunk group(s) to every access tandem in the LATA to serve the entire LATA. To the extent NuVox routes its traffic in such a way that utilizes AT&T's MTA service without properly ordering MTA, NuVox shall pay AT&T the associated MTA charges. In a situation of tandem exhaust at any particular tandem, where the Parties choose MTA as an alternative routing plan, the Parties will negotiate appropriate rates, terms and conditions for MTA.

4.10.7 **Local Tandem Interconnection**

4.10.7.1 Local Tandem Interconnection arrangement allows NuVox to establish an interconnection trunk group(s) at AT&T local tandems for: (1) the delivery of NuVox-originated Local Traffic, ISP-bound Traffic and IntraLATA Toll Traffic transported and terminated by AT&T to AT&T end offices served by those AT&T local tandems, and (2) for local Transit Traffic transported by AT&T for third party network providers who have also established an interconnection trunk group(s) at those AT&T local tandems.

4.10.7.2 When a specified local calling area is served by more than one (1) AT&T local tandem, NuVox must designate a "home" local tandem for each of its assigned NPA/NXXs and establish trunk connections to such local tandems. Additionally, NuVox may choose to establish an interconnection trunk group(s) at the AT&T local tandems where it has no codes homing but is not required to do so. NuVox may deliver Local Traffic, ISP-bound Traffic and IntraLATA Toll Traffic to a "home" AT&T local tandem that is destined for other AT&T or third party network provider end offices subtending other AT&T local tandems in the same local calling area where NuVox does not choose to establish an interconnection trunk group(s). It is NuVox's responsibility to enter its own NPA/NXX local tandem homing arrangements into the LERG either directly or via a vendor in

order for other third party network providers to determine appropriate traffic routing to NuVox's codes. Likewise, NuVox shall obtain its routing information from the LERG**.**

4.10.7.3 Notwithstanding establishing an interconnection trunk group(s) to AT&T's local tandems, NuVox must also establish an interconnection trunk group(s) to AT&T access tandems within the LATA on which NuVox has NPA/NXXs homed for the delivery of Interexchange Carrier Switched Access ("SWA") and toll and traffic to Type 2A CMRS connections located at the access tandems. AT&T shall not switch SWA traffic through more than one (1) AT&T access tandem. SWA, Type 2A CMRS or toll traffic routed to the local tandem in error will not be backhauled to the AT&T access tandem for completion. A Type 2A CMRS interconnection is a connection between a AT&T access tandem or local tandem office to a Mobile Service Provider's point of termination.

4.10.8 **Direct End Office-to-End Office Interconnection**

4.10.8.1 Direct End Office-to-End Office one-way or two-way interconnection trunk groups allow for the delivery of a Party's originating Local Traffic, ISP-bound Traffic and IntraLATA Toll Traffic to the terminating Party on a direct end office-to-end office basis.

4.10.8.2 To the extent technically feasible and where appropriate, AT&T will provide overflow routing consistent with how AT&T overflows its traffic. The overflow will be based on the homing arrangements displayed in the LERG.

4.10.8.3 The Parties may utilize direct end office-to-end office trunk groups under any one (1) of the following conditions:

4.10.8.3.1 Tandem Exhaust - If a tandem through which the Parties are interconnected is unable to, or is forecasted to be unable to support additional traffic loads for the Parties or any other carrier for any period of time, the Parties will attempt to mutually agree on an end office trunking plan or an appropriate alternative routing plan that will alleviate the tandem capacity shortage and ensure completion of traffic between NuVox and AT&T.

4.10.8.4 Mutual Agreement - The Parties may install and maintain direct end office trunking upon mutual agreement in the absence of conditions (1) or (2) above.

4.10.9 **Transit Traffic Trunk Group**

4.10.9.1 Transit Traffic trunks can either be two-way trunks or two (2) one-way trunks ordered by NuVox to deliver and receive Transit Traffic. Establishing Transit Traffic trunks at AT&T access and local tandems provides intratandem access to the third parties also interconnected at those tandems.

4.10.10 **Toll Free Traffic**

4.10.10.1 If NuVox chooses AT&T to perform the Service Switching Point ("SSP") Function (i.e., handle Toll Free database queries) from AT&T's switches, all NuVox originating Toll Free traffic will be routed over the Transit Traffic Trunk Group and shall be delivered using GR-394 format. Carrier Code "0110" and Circuit Code (to be determined for each LATA) shall be used for all such calls.

4.10.10.2 NuVox may choose to perform its own Toll Free database queries from its switch. In such cases, NuVox will determine the nature (local/intraLATA/interLATA) of the Toll Free call (local/IntraLATA/InterLATA) based on the response from the database. If the response from the database determines that the call is a AT&T local or intraLATA Toll Free call, NuVox will route the post-query local or IntraLATA converted ten-digit local number to AT&T over the local or intraLATA trunk group. If the response from the database determines that the is a third party (ICO, IXC, CMRS or other CLEC) local or intraLATA Toll Free call, NuVox will route the post-query local or intraLATA converted ten-digit local number to AT&T over the Transit Traffic Trunk Group and NuVox shall provide to AT&T a Toll Free billing record when appropriate. If the query reveals the call is an interLATA Toll Free call, NuVox will route the post-query interLATA Toll Free call (1) directly from its switch for carriers interconnected with its network or (2) over the Transit Traffic Trunk Group to carriers that are not directly connected to NuVox's network but that are connected to AT&T's access tandem.

4.10.10.3 All post-query Toll Free calls for which NuVox performs the SSP function, if delivered to AT&T, shall be delivered using GR-394 format for calls destined to IXCs, and GR-317 format for calls destined to end offices that directly subtend a AT&T access tandem within the LATA.

5. NETWORK DESIGN AND MANAGEMENT FOR INTERCONNECTION

5.1 Network Management and Changes. Both Parties will work cooperatively with each other to install and maintain the most effective and reliable interconnected telecommunications networks, including but not limited to, the exchange of toll-free maintenance contact numbers and escalation procedures. Both Parties agree to provide public notice of changes in the information necessary for the transmission and routing of services using their local exchange facilities or networks, as well as of any other changes that would affect the interoperability of those facilities and networks, to the extent required by, and in accordance with, applicable federal and state rules and regulations and as otherwise provided in this Agreement.

5.2 Interconnection Technical Standards. The interconnection of all networks will be based upon accepted industry/national guidelines for transmission standards and traffic blocking criteria. Interconnecting facilities shall conform, at a minimum,

to the telecommunications industry standard of DS-1 pursuant to Telcordia Standard No. TR-NWT-00499. Where NuVox chooses to utilize Signaling System 7 signaling, also known as Common Channel Signaling, SS7 connectivity is required between the NuVox switch and the AT&T Signaling Transfer Point ("STP"). AT&T will provide SS7 signaling using Common Channel Signaling Access Capability in accordance with the technical specifications set forth in the AT&T Guidelines to Technical Publication, TR-TSV-000905. Facilities of each Party shall provide the necessary on-hook, off-hook answer and disconnect supervision and shall provide calling number ID ("Calling Party Number") when technically feasible.

5.3 Quality of Interconnection. The local interconnection for the transmission and routing of telephone exchange service and exchange access that each Party provides to each other will be at least Equal in Quality to what it provides to itself and any subsidiary or affiliate, where technically feasible, or to any other Party to which each Party provides local interconnection. "Equal in Quality" shall have the meaning accorded in Section 51.305(a)(3) of the FCC's Rules, 47 C.F.R. § 51.305(a)(3).

5.4 Network Management Controls. Both Parties will work cooperatively to apply sound network management principles by invoking appropriate network management controls (e.g., call gapping) to alleviate or prevent network congestion.

6. Signaling

6.1 AT&T shall offer access to signaling and access to AT&T's signaling databases subject to compatibility testing and at the rates set forth in this Attachment. AT&T may provide mediated access to AT&T signaling systems and databases. Available signaling elements include signaling links, signal transfer points and service control points. Signaling functionality will be available with both A-link and B-link connectivity.

6.2 Signaling Link Transport

6.2.1 Signaling Link Transport is a set of two (2) or four (4) dedicated 56 kbps transmission paths between NuVox designated Signaling Points of Interconnection that provide appropriate physical diversity.

6.2.2 **Technical Requirements**

6.2.3 Signaling Link Transport shall consist of full duplex mode 56 kbps transmission paths and shall perform in the following two (2) ways:

6.2.3.1 An "A-link" Signaling Link Transport is a connection between a switch or SCP and a STP switch pair; and

6.2.3.2 As a "B-link" Signaling Link Transport is a connection between two (2) STP switch pairs in different company networks (e.g., between two (2) STP switch pairs for two (2) CLECs).

6.2.4 Signaling Link Transport shall consist of signaling link layers as follows:

6.2.4.1 An A-link layer shall consist of two (2) links. There shall be no more than two (2) minutes down time per year for an A-link layer.

6.2.4.2 A B-link layer shall consist of four (4) links. There shall be negligible (less than two (2) seconds) down time per year for a B-link layer.

6.2.5 A signaling link layer shall satisfy interoffice and intraoffice diversity of facilities and equipment, such that:

6.2.5.1 No single failure of facilities or equipment causes the failure of both links in an A-link layer (i.e., the links should be provided on a minimum of two (2) separate physical paths end-to-end); and

6.2.5.2 No two (2) concurrent failures of facilities or equipment shall cause the failure of all four (4) links in a B-link layer (i.e., the links should be provided on a minimum of three (3) separate physical paths end-to-end).

6.2.6 **Interface Requirements**

6.2.6.1 There shall be a DS1 (1.544 Mbps) interface at NuVox's designated SPOIs. Each 56 kbps transmission path shall appear as a DS0 channel within the DS1 interface.

6.3 Signaling Transfer Points

6.3.1 A Signaling Transfer Point is a signaling network function that includes all of the capabilities provided by the signaling transfer point switches and their associated signaling links that enables the exchange of SS7 messages among and between switching elements, database elements and STPs.

6.3.2 **Technical Requirements**

6.3.2.1 STPs shall provide access to AT&T Local Switching or Tandem Switching and to AT&T Service Control Points/Databases connected to AT&T SS7 network. STPs also provide access to third-party local or tandem switching and third-party-provided STPs.

6.3.2.2 The connectivity provided by STPs shall fully support the functions of all other Network Elements connected to the AT&T SS7 network. This includes the use of

the AT&T SS7 network to convey messages that neither originate nor terminate at a signaling end point directly connected to the AT&T SS7 network (i.e., transit messages). When the AT&T SS7 network is used to convey transit messages, there shall be no alteration of the Integrated Services Digital Network User Part or Transaction Capabilities Application Part ("TCAP") user data that constitutes the content of the message.

6.3.2.3 STPs shall provide all functions of the SCCP necessary for Class 0 (basic connectionless) service, as defined in Telcordia ANSI Interconnection Requirements. This includes Global Title Translation ("GTT") and SCCP Management procedures, as specified in ANSI T1.112.4. Where the destination signaling point is a NuVox or third party local or tandem switching system directly connected to AT&T SS7 network, AT&T shall perform final GTT of messages to the destination and SCCP Subsystem Management of the destination. In all other cases, AT&T shall perform intermediate GTT of messages to a gateway pair of STPs in an SS7 network connected with the AT&T SS7 network, and shall not perform SCCP Subsystem Management of the destination. If AT&T performs final GTT to a NuVox database, then NuVox agrees to provide AT&T with the Destination Point Code for NuVox database.

6.3.2.4 STPs shall provide all functions of the Operations, Maintenance and Administration Part ("OMAP") as specified in applicable industry standard technical references, which may include, where available in AT&T's network, MTP Routing Verification Test ("MRVT"); and SCCP Routing Verification Test ("SRVT").

6.3.2.5 Where the destination signaling point is a AT&T local or tandem switching system or database, or is a NuVox or third party local or tandem switching system directly connected to the AT&T SS7 network, STPs shall perform MRVT and SRVT to the destination signaling point. In all other cases, STPs shall perform MRVT and SRVT to a gateway pair of STPs in an SS7 network connected with the AT&T SS7 network. This requirement may be superseded by the specifications for Internetwork MRVT and SRVT when these become approved ANSI standards and available capabilities of AT&T STPs.

6.4 SS7 Advanced Intelligent Network ("AIN") Access

6.4.1 Interface Requirements

6.4.1.1 AT&T shall provide the following STP options to connect NuVox or NuVox-designated local switching systems to the AT&T SS7 network:

6.4.1.1.1 An A-link interface from NuVox local switching systems; and,
6.4.1.1.2 A B-link interface from NuVox local STPs.

6.4.1.2 Each type of interface shall be provided by one (1) or more layers of signaling links.

6.4.1.3 The Signaling Point of Interconnection for each link shall be located at a cross connect element in the central office where the AT&T STP is located.

6.4.1.4 AT&T shall provide intraoffice diversity between the SPOI and AT&T STPs, so that no single failure of intraoffice facilities or equipment shall cause the failure of both B-links in a layer connecting to a AT&T STP.

6.4.1.5 STPs shall provide all functions of the MTP as defined in the applicable industry standard technical references.

6.4.2 **Message Screening**

6.4.2.1 AT&T shall set message screening parameters so as to accept/send valid messages from NuVox local or tandem switching systems destined to/from any signaling point within AT&T's SS7 network where the NuVox switching system has a valid signaling relationship.

6.4.3 AT&T shall set message screening parameters so as to accept/send valid messages from NuVox local or tandem switching systems destined to/from any signaling point or network accessed through AT&T's SS7 network where the NuVox switching system has a valid signaling relationship.

6.5 Service Control Points/Databases

6.5.1 Call Related Databases provide the storage of, access to, and manipulation of information required to offer a particular service and/or capability. AT&T shall provide access to the following Databases: Local Number Portability, LIDB, Toll Free Number Database, Automatic Location Identification/Data Management System, and Calling Name Database. AT&T also provides access to Service Creation Environment and Service Management System ("SCE/SMS") application databases and Directory Assistance.

6.5.2 A Service Control Point ("SCP") is deployed in a SS7 network that executes service application logic in response to SS7 queries sent to it by a switching system also connected to the SS7 network. Service Management Systems provide operational interfaces to allow for provisioning, administration and maintenance of subscriber data and service application data stored in SCPs.

6.5.3 **Technical Requirements for SCPs/Databases**

6.5.3.1 AT&T shall provide physical access to SCPs through the SS7 network and protocols with TCAP as the application layer protocol.

6.5.3.2 AT&T shall provide physical interconnection to databases via industry standard interfaces and protocols (e.g. SS7, ISDN and X.25).

6.5.3.3 The reliability of interconnection options shall be consistent with requirements for diversity and survivability.

6.6 Local Number Portability Database

6.6.1 The Permanent Number Portability ("PNP") database supplies routing numbers for calls involving numbers that have been ported from one (1) local service provider to another. AT&T agrees to provide access to the PNP database at rates, terms and conditions as set forth by AT&T and in accordance with an effective FCC or Commission directive.

6.7 SS7 Network Interconnection

6.7.1 SS7 Network Interconnection is the interconnection of NuVox local STPs or NuVox local or tandem switching systems with AT&T STPs. This interconnection provides connectivity that enables the exchange of SS7 messages among AT&T switching systems and databases, NuVox local or tandem switching systems, and other third-party switching systems directly connected to the AT&T SS7 network.

6.7.2 The connectivity provided by SS7 Network Interconnection shall fully support the functions of AT&T switching systems and databases and NuVox or other third-party switching systems with A-link access to the AT&T SS7 network.

6.7.3 If traffic is routed based on dialed or translated digits between a NuVox local switching system and a AT&T or other third-party local switching system, either directly or via a AT&T tandem switching system, then it is a requirement that the AT&T SS7 network convey via SS7 Network Interconnection the TCAP messages that are necessary to provide Call Management services (Automatic Callback, Automatic Recall, and Screening List Editing) between the NuVox local STPs and AT&T or other third-party local switch.

6.7.4 SS7 Network Interconnection shall provide:

6.7.4.1 Signaling Data Link functions, as specified in ANSI T1.111.2;

6.7.4.2 Signaling Link functions, as specified in ANSI T1.111.3; and

6.7.4.3 Signaling Network Management functions, as specified in ANSI T1.111.4.

6.7.5 SS7 Network Interconnection shall provide all functions of the SCCP necessary for Class 0 (basic connectionless) service, as specified in ANSI T1.112. This includes GTT and SCCP Management procedures, as specified in ANSI T1.112.4. Where the destination signaling point is a AT&T switching system or database, or is another third-party local or tandem switching system directly connected to the AT&T SS7 network, SS7 Network Interconnection shall include final GTT of messages to the destination and SCCP Subsystem Management of the destination. Where the destination signaling point is a NuVox local or tandem switching system, SS7 Network Interconnection shall include intermediate GTT of messages to a gateway pair of NuVox local STPs, and shall not include SCCP Subsystem Management of the destination.

6.7.6 SS7 Network Interconnection shall provide all functions of the Integrated Services Digital Network User Part, as specified in ANSI T1.113.

6.7.7 SS7 Network Interconnection shall provide all functions of the TCAP, as specified in ANSI T1.114.

6.7.8 If Internetwork MRVT and SRVT become approved ANSI standards and available capabilities of AT&T STPs, SS7 Network Interconnection may provide these functions of the OMAP.

6.7.9 **Interface Requirements**

6.7.9.1 The following SS7 Network Interconnection interface options are available to connect NuVox or NuVox-designated local or tandem switching systems or STPs to the AT&T SS7 network:

6.7.9.1.1 A-link interface from NuVox local or tandem switching systems; and

6.7.9.1.2 B-link interface from NuVox STPs.

6.7.9.2 The SPOI for each link shall be located at a cross-connect element in the central office where the AT&T STP is located. There shall be a DS1 or higher rate transport interface at each of the SPOIs. Each signaling link shall appear as a DS0 channel within the DS1 or higher rate interface.

6.7.9.3 AT&T shall provide intraoffice diversity between the SPOIs and the AT&T STP, so that no single failure of intraoffice facilities or equipment shall cause the failure of both B-links in a layer connecting to a AT&T STP.

6.7.9.4 The protocol interface requirements for SS7 Network Interconnection include the MTP, ISDNUP, SCCP, and TCAP. These protocol interfaces shall conform to the applicable industry standard technical references. AT&T does not have the capability to support any of the VoIP interfaces at the present time but is willing to negotiate new protocol interfaces.

6.7.9.5 AT&T shall set message screening parameters to accept messages from NuVox local or tandem switching systems destined to any signaling point in the AT&T SS7 network with which the NuVox switching system has a valid signaling relationship.

6.8 Rate Categories And Applications

6.8.1 **Message Charges**

6.8.1.1 Message charges, as set forth in Section 6.8.1.3, following, are assessed based on the type of message protocol, ISUP or TCAP. ISUP messages are associated with call set-up, while TCAP messages are used to query call related databases. ISUP message charges are assessed per terminating and originating call set-up request and TCAP message charges are assessed per data request.

6.8.1.2 Message charges do not apply for TCAP messages switched by the regional STPs to the AT&T provided 800 Data Base, LIDB or LNP Data Base. Query charges are assessed in lieu of message charges. Query charges for 800 Data Base are described in Section 6.9.5, following. When TCAP messages are destined for a foreign database, including a non-company provided LNP Data Base, message charges are assessed in lieu of query charges.

6.8.1.3 Message charges are assessed in the following manner:

6.8.1.3.1 **Signal Formulation**

6.8.1.3.1.1 An ISUP Signal Formulation charge is assessed, per call set-up request, for terminating and originating formulating signaling messages in association with call set-up.

6.8.1.3.2 **Signal Transport**

6.8.1.3.2.1 An ISUP Signal Transport charge is assessed, per call set-up request, for signaling messages transported to and from the Company STP in association with call set-up.

6.8.1.3.2.2 A TCAP Signal Transport charge is assessed per data request transported to a AT&T STP and destined for a foreign database.

6.8.1.3.3 **Signal Switching**

6.8.1.3.3.1 An ISUP Signal Switching charge is assessed per call set-up request that is switched at the Company STP for terminating and originating messages.

6.8.1.3.3.2 A TCAP Signal Switching charge is assessed for each data request that is switched by the Company STP and destined for a foreign network or database.

6.8.1.3.4 **Query Charges**

6.8.1.3.4.1 Query charges apply for queries to the Company LIDB and the LNP Data Base. When query charges apply for access to a Company provided database, message charges are not assessed. LIDB Query Charges are described in 6.9.3, following and the LNP Data Base Query Charge is described in 6.9.4, following.

6.8.1.4 **TCAP Bill and Keep**

6.8.1.4.1 The Parties agree to treat signaling messages, signaling ports, and signaling links associated with local calls on a bill and keep basis.

6.8.1.4.2 NuVox and AT&T agree that AT&T will bill NuVox for signaling links, signaling ports, and signaling messages associated with interstate calls and with intrastate non-local calls in accordance with AT&T's federal and state tariffs.

6.8.1.4.3 Beginning on the Effective Date of this Agreement and continuing until NuVox implements a system that is capable of counting the total number of signaling messages that traveled over facilities connecting NuVox's CCS7 network and AT&T's CCS7 network, AT&T agrees that for the purposes of billing AT&T for signaling messages for any given month, NuVox may use the total number of signaling messages that AT&T's signaling bill to NuVox indicates have traveled over facilities connecting NuVox's CCS7 network and AT&T's CCS7 network for that same month. When NuVox implements a system that is capable of counting the total number of signaling messages that travel over facilities connecting NuVox's CCS7 network and AT&T's CCS7 network, NuVox will use the number of signaling messages counted by such system for the purposes of billing AT&T for signaling messages, subject to AT&T's right to contest the accuracy of the number of signaling messages counted by such system.

6.8.1.4.4 For the purposes of billing AT&T for signaling messages, NuVox will apply the SPIU/SPLU provided by AT&T (which can, at AT&T's option, be the same as the PIU/PLU that AT&T provides for minutes of use) to the number of messages calculated pursuant to Paragraph 6.8.1.4.3 above.

6.9 RATES AND CHARGES ASSOCIATED WITH SS7

6.9.1	**Message Charge for ISUP Messages**	**RATE**
	Per signaling message	Bill & Keep

6.9.2	**Message Charge for TCAP Messages**	**RATE**
	Per signaling message	Bill& Keep

6.9.3 **LINE INFORMATION DATA BASE SERVICE**

	RATE PER QUERY
Per Access Transport Query	Negotiated Rates Pursuant to a Separate Agreement or Tariff Rate
Per Validation Service Query	Negotiated Rates Pursuant to a Separate Agreement or Tariff Rate
Per OLNS Service Query	Tariff Rate

6.9.4 **LOCAL NUMBER PORTABILITY DATA BASE SERVICE**

Per LNP Query	Pricing Schedule

6.9.5 **800 DATA BASE SERVICE**

Per 800 Query	Tariff Rate

7. FORECASTING FOR TRUNK PROVISIONING

7.1 Within six (6) months after execution of this Agreement, NuVox shall provide an initial interconnection trunk group forecast for each LATA in which it plans to provide service within AT&T's region. AT&T's reciprocal trunking forecasts will be based upon information provided by NuVox in the initial forecast. If NuVox refuses to provide such information, AT&T shall provide reciprocal trunking forecasts based only on existing trunk group growth and AT&T's annual estimated percentage of AT&T subscriber line growth. After the exchange of each Party's forecast information, the Parties shall conduct a joint planning meeting to develop a joint interconnection trunk group forecast. Each forecast provided under this Section 7 shall be deemed "Confidential Information" under the General Terms and Conditions of this Agreement.

7.2 The Parties shall use best efforts to make the initial and semi-annual subsequent forecasts as accurate as possible based on reasonable engineering criteria. In

addition, the Parties agree to proactively manage their interconnection trunking arrangements and use best efforts to timely notify each other if forecasted need quantities change or if a known or anticipated network event that may create a blocking situation is likely to occur during the time period between joint planning meetings. Joint planning meetings shall be conducted via conference call, unless mutual agreement is reached otherwise.

7.3 At a minimum, the joint forecast shall include the projected quantity of Transit Trunks, NuVox-to-AT&T one-way trunks (NuVox Trunks), AT&T-to-NuVox one-way trunks ("Reciprocal Trunks") and/or two-way interconnection trunks, if the Parties have agreed to interconnect using two-way trunking to transport the Parties' Local Traffic, ISP-Bound Traffic and IntraLATA Toll Traffic. The quantities shall be projected for a minimum of six (6) months and shall include an estimate of the current year plus the next two (2) years total forecasted quantities. The Parties shall mutually develop Reciprocal Trunk Groups and/or two-way interconnection trunk forecast quantities.

7.4 All forecasts shall include, at a minimum, Access Carrier Terminal Location ("ACTL"), trunk group type (local/intraLATA toll, Transit, Operator Services, 911, etc.), A location/Z location (CLLI codes for NuVox location and AT&T location where the trunks shall terminate), interface type (e.g., DS1), Direction of Signaling, Trunk Group Number, if known, (commonly referred to as the 2-6 code) and forecasted trunks in service each year (cumulative).

7.5 The submitting and development of interconnection trunk forecasts shall not replace the ordering process for local interconnection trunks. Each Party shall exercise its best efforts and act in good faith to plan for and provide the quantity of interconnection trunks mutually forecasted. However, the provision of the forecasted quantity of interconnection trunks is subject to trunk terminations and facility capacity existing at the time the trunk order is submitted and AT&T shall not be responsible for a lack of interconnection trunks provided that best efforts and good faith have been exercised.

8. TRUNK UTILIZATION

8.1 For the Reciprocal Trunk Groups that cannot overflow traffic to another trunk group ("Reciprocal Final Trunk Groups"), AT&T and NuVox shall monitor traffic on each interconnection Reciprocal Final Trunk Group that is ordered and installed. The Parties agree that the Reciprocal Final Trunk Groups will be utilized at sixty percent (60%) of the time consistent busy hour utilization level within 180 days of installation. The Parties agree that the Reciprocal Final Trunk Groups will be utilized at eighty percent (80%) of the time consistent busy hour utilization level within 365 days of installation. Any Reciprocal Final Trunk Group not meeting the minimum thresholds set forth in this Section 8 are defined as "Under-utilized" trunks. AT&T may disconnect any Under-utilized Reciprocal

Final Trunk Groups and, for trunks not in excess of NuVox's forecast, NuVox shall refund to AT&T the associated nonrecurring and recurring trunk and facility charges paid by AT&T, if any.

8.1.1 AT&T's CISC will notify NuVox of any under-utilized Reciprocal Trunk Groups and the number of such trunk groups that AT&T wishes to disconnect. AT&T will provide supporting information either by email or facsimile to the designated NuVox interface. NuVox will provide concurrence with the disconnection in seven (7) business days or will provide specific information supporting why the trunks should not be disconnected. Such supporting information should include expected traffic volumes (including traffic volumes generated due to Local Number Portability) and the timeframes within which NuVox expects to need such trunks. AT&T's CISC Project Manager and Circuit Capacity Manager will discuss the information with NuVox to determine if agreement can be reached on the number of Reciprocal Final Trunk Groups to be removed. If no agreement can be reached, AT&T will issue disconnect orders to NuVox. Notwithstanding any other provision to this Agreement, the Parties will disconnect the underutilized trunks no sooner than two (2) weeks after NuVox receives such disconnect orders, unless the parties mutually agree to do so sooner.

8.1.2 To the extent that any interconnection trunk group is utilized at a time-consistent busy hour of eighty percent (80%) or greater, the Parties may review the trunk groups and, if necessary, shall negotiate in good faith for the installation of augmented facilities.

8.2 For the two-way trunk groups that cannot overflow traffic to another trunk group and other than alternate final trunk groups, AT&T and NuVox shall monitor traffic on each interconnection trunk group that is ordered and installed. The Parties agree that within180 days of the installation of the AT&T two-way trunk or trunks, the trunks will be utilized at sixty percent (60%) of the time consistent busy hour utilization level. The Parties agree that within 365 days of the installation of a trunk or trunks, the trunks will be utilized at eighty percent (80%) of the time consistent busy hour utilization level. Any trunk or trunks not meeting the minimum thresholds set forth in this Section 8 are defined as "Under-utilized" trunks. AT&T will request the disconnection of any Under-utilized two-way trunk(s) and, for trunks not in excess of NuVox's forecast, NuVox shall refund to AT&T the associated nonrecurring and recurring trunk and facility charges paid by AT&T, if any.

8.2.1 AT&T's LISC will notify NuVox of any under-utilized two-way trunk groups and the number of trunks that AT&T wishes to disconnect. AT&T will provide supporting information either by email or facsimile to the designated NuVox interface. NuVox will provide concurrence with the disconnection in seven (7) business days or will provide specific information supporting why the two-way trunks should not be disconnected. Such supporting information should include

expected traffic volumes (including traffic volumes generated due to Local Number Portability) and the timeframes within which NuVox expects to need such trunks. AT&T's CISC Project Manager and Circuit Capacity Manager will discuss the information with NuVox to determine if agreement can be reached on the number of trunks to be removed. If no agreement can be reached, NuVox will issue disconnect orders to AT&T. Notwithstanding any other provision to this Agreement, the Parties will disconnect the underutilized trunks no sooner than two (2) weeks after NuVox receives such disconnect orders, unless the parties mutually agree to do so sooner.

8.2.2 To the extent that any interconnection trunk group is utilized at a time-consistent busy hour of eighty percent (80%) or greater, the Parties shall review the trunk groups and, if necessary, shall negotiate in good faith for the installation of augmented facilities.

9. INTERFERENCE OR IMPAIRMENT

9.1 As soon as possible and in no case later than twenty-four (24) hours after receipt of notification of blocking of traffic originated within the other Party's network, the Parties shall determine and begin work to implement reasonable corrective measures in a manner consistent with industry practices.

9.2 In the event of an outage or trouble in any arrangement, facility, or service being provided by AT&T hereunder, AT&T will follow procedures for isolating and clearing the outage or trouble that are no less favorable than those that apply to comparable arrangements, facilities, or services being provided by AT&T to itself, Affiliate or any other carrier whose network is connected to that of AT&T.

9.3 AT&T will use best efforts to provide NuVox with at least thirty (30) days advance notification of scheduled maintenance activity. Upon such notice, NuVox may submit a reasonable request for additional information relevant to the scheduled maintenance activity and AT&T shall provide such information to the extent the scheduled maintenance activity may impact NuVox and such information is reasonably necessary for NuVox to identify and analyze potential risks associated with such maintenance. AT&T may expedite or delay scheduled maintenance as a result of unscheduled maintenance or other unforeseen events. In those instances where AT&T will not perform scheduled maintenance at the announced times, AT&T will make best efforts to provide NuVox with as much notice as is reasonably possible concerning the changed schedule.

9.4 For switch software/processor updates, software upgrades/new releases to the SONET transport network elements, or other major scheduled events which might impact NuVox, AT&T shall use best efforts to provide NuVox with at least thirty (30) days advance notification of scheduled maintenance activity. Upon such notice, NuVox may submit a reasonable request for additional information

relevant to the scheduled maintenance activity and AT&T shall provide such information to the extent the scheduled maintenance activity may impact NuVox and such information is reasonably necessary for NuVox to identify and analyze potential risks associated with such maintenance.

9.5 AT&T will use best efforts to provide NuVox's Network Operations Center with at least thirty (30) days advance, written notice when translations are scheduled to be modified on NuVox's trunk groups.

9.6 Once NuVox determines that there is an outage that encompasses either a particular section of the network or the whole network, then NuVox shall generate a trouble ticket to the CISC. After issuing the trouble ticket, NuVox will notify the appropriate AT&T representative in the CISC via telephone. NuVox may then send an email confirmation to such AT&T representative. AT&T will work cooperatively with NuVox to determine the appropriate steps to resolve such outage. Additionally, NuVox will provide AT&T with any applicable information that is necessary to resolve such outage and the Parties will work cooperatively to take all steps necessary to resolve the outage.

9.7 A "Global Outage" is an outage as defined as set forth in 47 CFR § 63.100, including but not limited to trunk group outages. AT&T will provide initial notification to NuVox of a Global Outage in accordance with BellSouth's Operational Understanding Guide. Subsequent to the initial notification of a Global Outage, NuVox may contact the CISC via normal procedures (e.g., electronic mail, phone, etc.) to request further information, including but not limited to the method used to restore service and steps taken to prevent the recurrence of the incident. AT&T will provide such information in a written report to NuVox as soon as such information is available to AT&T and no later than thirty (30) days following the Global Outage. The aforementioned written report shall include the following information where available:

- Reporting Carrier
- Date Of Incident
- Time Of Incident
- Geographic Area Affected
- Types Of Services Affected
- Outage Duration
- Background Of The Incident

- Direct Cause
- Root Cause
- Methods Used To Restore Service
- Steps Taken To Prevent Recurrence Of The Incident

10. COMPENSATION FOR CALL TRANSPORT AND TERMINATION FOR LOCAL TRAFFIC AND ISP-BOUND TRAFFIC

10.1 Neither Party shall pay compensation to the other Party for per minute of use rate elements associated with the Call Transport and Termination of Local Traffic or ISP-bound Traffic.

10.2 The appropriate elemental rates set forth in the Pricing Schedule shall apply for Transit Traffic as described in this Attachment and to Multiple Tandem Access as described in this Attachment.

10.3 Neither Party shall represent Switched Access Traffic, as defined in this Attachment, as Local Traffic or ISP-bound Traffic for purposes of determining compensation for the call.

10.4 If NuVox assigns NPA/NXXs to specific AT&T rate centers within the LATA and assigns numbers from those NPA/NXXs to NuVox's customers physically located outside of that LATA, AT&T originated traffic that is not bound for an ISP and originates from within the LATA where the NPA/NXXs are assigned and is delivered to a NuVox's customer physically located outside of such LATA shall not be deemed Local Traffic. Further, NuVox agrees to identify such traffic to AT&T, to the extent technically feasible, and to compensate AT&T for originating and transporting such non-local traffic to NuVox at AT&T's switched access tariff rates**.**

10.4.1 The Parties have been unable to agree on the treatment of calls where NuVox assigns NPA/NXXs to specific AT&T rate centers within the LATA and assigns numbers from those NPA/NXXs to NuVox's customers physically located outside of that LATA and such customers are ISPs. Notwithstanding the foregoing, and without waiving any rights with respect to either Party's position as to the treatment of such calls, the Parties agree that, for purposes of this Agreement, traffic delivered to a customer that is an ISP physically located outside of such LATA shall be considered ISP-bound Traffic as defined in this Attachment.

10.5 **Jurisdictional Reporting**

10.5.1 Percent Local Usage. Each Party shall report to the other a Percent Local Usage ("PLU") factor. The application of the PLU will determine the amount of

Local/ISP-Bound minutes to be billed to the other Party. Local and ISP-bound Traffic shall be treated as Local for purposes of calculating the PLU. Requirements associated with PLU calculation and reporting shall be as set forth in AT&T SE's Jurisdictional Factors Reporting Guide, attached hereto as Exhibit E.

10.5.2 Percent Local Facility**.** Each Party shall report to the other a Percent Local Facility ("PLF") factor. The application of the PLF will determine the portion of switched dedicated transport to be billed per the local jurisdiction rates. The PLF shall be applied to Multiplexing, Local Channel and Interoffice Channel Switched Dedicated Transport utilized in the provision of local interconnection trunks. Requirements associated with PLF calculation and reporting shall be as set forth in AT&T SE's Jurisdictional Factors Reporting Guide, attached hereto as Exhibit E.

10.5.3 Percent Interstate Usage. Each Party shall report to the other a Percent Interstate Usage ("PIU") factor. Requirements associated with PIU calculation and reporting shall be as set forth in AT&T SE's Jurisdictional Factors Reporting Guide, attached hereto as Exhibit E.

10.5.4 Application of Factors. After interstate and intrastate traffic percentages have been determined by use of PIU procedures, the PLU factor will be used for application and billing of Call Transport and Termination consistent with Section 3.3 of this Attachment.

10.5.5 Factors on file with AT&T as of the Effective Date of this Agreement shall remain in place until such time as they are replaced by NuVox in accordance with this Attachment, or replaced in accordance with Section 10.5.6 of this Attachment 3.

10.5.6 In Lieu of Jurisdictional Factors Reported. Notwithstanding the provisions in Sections 10.5.1, 10.5.2, and 10.5.3 above, where the terminating Party has message recording technology that identifies the jurisdiction of traffic terminated as defined in this Agreement, such information may, at the terminating Party's option, be utilized to determine the appropriate jurisdictional reporting factors, in lieu of those provided by the originating Party. In the event that the terminating Party opts to utilize its own data to determine jurisdictional reporting factors, such terminating Party shall notify the originating Party at least thirty (30) days prior to the beginning of the calendar quarter in which the terminating Party will begin to utilize its own data.

10.5.7 Upon the request of the originating Party, the terminating Party shall provide supporting data for the jurisdictional factors proposed by the terminating Party to be used in lieu of those reported by the originating Party. The originating Party shall have thirty (30) days to consent or object to the proposed replacement of

reported factors. If the originating Party consents or fails to respond within thirty (30) days, the terminating Party may proceed with the replacement of factors effective at the beginning of the calendar quarter. If the originating Party objects to the proposed replacement of reported factors, the Parties shall proceed as set forth below.

10.5.8 Upon either Party's request, the Parties will work in good faith to resolve the discrepancy between the factors submitted by the originating party and those proposed by the terminating party pursuant to Section 10.5.6 above. In the event that the Parties are unable to mutually agree as to the appropriate resolution, the Parties may negotiate a mutually agreeable resolution based on the data specific to the traffic patterns of the originating party or either Party may request an audit of the factors in accordance with Section 10.5.9 below. In the event that negotiations and audits fail to resolve disputes between the parties, either Party may seek Dispute Resolution as set forth in the General Terms and Conditions. While such a dispute is pending, factors reported by the originating Party shall remain in place, unless the Parties mutually agree otherwise.

10.5.9 Audits. On thirty (30) days written notice, each Party must provide the other the ability and opportunity to conduct an annual audit of the jurisdictional reporting factors as reported or utilized pursuant to this Attachment 3 to ensure the proper billing of traffic. AT&T and NuVox shall retain records of call detail for a minimum of nine months from which the jurisdictional reporting factors can be ascertained. The audit shall be conducted during normal business hours at an office designated by the Party being audited. Audit requests shall not be submitted more frequently than one (1) time per calendar year. The Parties shall use commercially reasonable efforts to complete audits in as timely a manner as possible. Audits shall be performed by a mutually acceptable independent auditor paid for by the Party requesting the audit. The jurisdictional reporting factors shall be adjusted based upon the audit results and shall apply for the quarter the audit was completed, for the quarter prior to the completion of the audit, and for the two (2) quarters following the completion of the audit. If, as a result of an audit, either Party is found to have overstated jurisdictional reporting factors by twenty percentage points (20%) or more, that Party shall reimburse the auditing Party for the cost of the audit

10.6 Compensation for 8XX Traffic

10.6.1 Compensation for 8XX Traffic. Each Party shall compensate the other pursuant to the appropriate Switched Access charges, including the database query charge as applicable, as set forth in the providing Party's tariff, as filed and effective with the FCC or Commission, or reasonable and non-discriminatory web-posted listing if the FCC or Commission does not require filing of a tariff.

10.6.2 Records for 8XX Billing. Each Party will provide to the other the appropriate records necessary for billing intraLATA 8XX customers. The records provided will be in a standard EMI format.

10.6.3 8XX Access Toll Free Dialing Ten Digit Screening ("TFD"). AT&T's provision of TFD to NuVox requires interconnection from NuVox to AT&T's 8XX Signal Channel Point ("SCP"). Such interconnections shall be established pursuant to AT&T's Common Channel Signaling Interconnection Guidelines and Telcordia's CCS Network Interface Specification document, TR-TSV-000905. NuVox shall establish SS7 interconnection at the AT&T Local Signal Transfer Points serving the AT&T 8XX SCPs that NuVox desires to query. The terms and conditions for 8XX TFD are set out in AT&T's Intrastate Access Services Tariff.

10.7 Switched Access Traffic is defined as telephone calls requiring local transmission or switching services for the purpose of the origination or termination of Telephone Toll Service. Switched Access Traffic includes the following types of traffic: Feature Group A, Feature Group B, Feature Group C, Feature Group D, toll free access (e.g., 800/877/888), and 900 access services. Switched Access Traffic does not include Local Traffic and ISP-Bound Traffic originated by one (1) Party and terminated by the other. The Parties have been unable to agree as to whether "Voice-Over-Internet Protocol" transmissions ("VOIP") which cross LATA boundaries constitute Switched Access Traffic. Notwithstanding the foregoing, and without waiving any rights with respect to either Party's position as to the jurisdictional nature of VOIP, the Parties agree to amend this Agreement in accordance with the General Terms and Conditions of this Agreement to abide by any effective and applicable FCC rules and orders regarding the nature of such traffic and the compensation payable by the Parties for such traffic, if any.

10.7.1 If the AT&T customer chooses NuVox as their presubscribed interexchange carrier, or if the AT&T customer uses NuVox as an interexchange carrier on a 101XXXX basis, AT&T will charge NuVox the appropriate AT&T tariff charges for originating switched access services.

10.7.2 Where the originating Party delivers Switched Access Traffic to the terminating Party, the originating Party will pay the terminating Party terminating switched access charges as set forth in the providing Party's tariff, as filed and effective

with the FCC or Commission, or reasonable and non-discriminatory web-posted listing if the FCC or Commission does not require filing of a tariff.

10.7.3 When one (1) Party's end office switch, subtending the other Party's Access Tandem switch for receipt or delivery of switched access traffic, provides an access service connection to or from an IXC by either a direct trunk group to the IXC utilizing the other Party's facilities, or via the other Party's tandem switch, each Party will provide its own access services to the IXC and bill on a multi-bill, multi-tariff meet-point basis. Each Party will bill its own access services rates to the IXC with the exception of the interconnection charge. The interconnection charge will be billed by the Party providing the end office function. The Parties will use the Multiple Exchange Carrier Access Billing ("MECAB") guidelines to establish meet point billing for all applicable traffic. . Thirty (30)-day billing periods will be employed for these arrangements. To the extent either party is providing the tandem function, that party (i.e., Initial Billing Company) agrees to provide to the other company (i.e., Subsequent Billing Company), as defined in MECAB, at no charge, the switched access detailed usage data within no more than sixty (60) days after the recording date where technically feasible. Each company will notify the other when it determines that it is not feasible to meet these requirements so that the customers may be notified for any necessary revenue accrual associated with the significantly delayed recording or billing. As business requirements change, data reporting requirements may be modified as necessary, by mutual agreement of the Parties or per a change in industry standards.

10.7.4 In the event that the Initial Billing Party, as defined herein, was provided the accurate switched access detailed usage data in a manner that allowed the Initial Billing Party to generate and provide such data to the Subsequent Billing Party within ninety (90) days after the recording date and where the Initial Billing Party failed to provide notice to the Subsequent Billing Party of any inability to provide such data and the Subsequent Billing Party is unable to bill and collect access revenues due to the Initial Billing Party's failure to provide such data within said time period, then the Initial Billing Party shall be liable to the other Party in an amount equal to the unbillable or uncollectible revenues. In the event that the Initial Billing Party provides notice to the Subsequent Billing Party of an inability to provide such data within ninety (90) days after the recording date and the Initial Billing Party was provided the switched access detailed usage data in a manner that the Initial Billing Party was able to generate and provide such data to the Subsequent Billing Party within such ninety (90) day period, the Initial Billing Party shall provide such information to the Subsequent Billing Party within a reasonable period of time after the recording date. If the Initial Billing Party fails to provide such information to the Subsequent Billing Party within such period of time and the Subsequent Billing Party is legally unable to bill access revenues due to the Initial Billing Party's failure to provide such data within said time period, then the Initial Billing Party shall be liable to the other Party in an amount equal

to the unbillable or uncollectible revenues. Each company will provide complete documentation to the other to substantiate any claim of such unbillable or uncollectible revenues. In the event that the Parties disagree as to the liability of the Initial Billing Party for such unbillable or uncollectible revenues, then either Party may invoke the Dispute Resolution process set forth in this Agreement.

10.7.5 The Initial Billing Company will retain for a minimum period of sixty (60) days, access message detail sufficient to recreate any data that is lost or damaged by the tandem provider company or any third party involved in processing or transporting data. Initial Billing Company agrees to recreate the lost or damaged data within forty-eight (48) hours of notification by the other or by an authorized third party handling the data.

10.7.6 Initial Billing Company also agrees to process the recreated data within forty-eight (48) hours of receipt at its data processing center.

10.7.7 All claims for unbillable or uncollectible revenue should be filed with the Initial Billing Company within 120 days of the date the receipt of the usage record.

10.7.8 The Initial Billing Party shall keep records of its billing activities relating to jointly-provided Intrastate and Interstate Switched Access Traffic Services in sufficient detail to permit the Subsequent Billing Party to, by formal or informal review or audit, to verify the accuracy and reasonableness of the jointly-provided access billing data provided by the Initial Billing Party. Each Party agrees to cooperate in such formal or informal reviews or audits and further agrees to jointly review the findings of such reviews or audits in order to resolve any differences concerning the findings thereof. In the absence of mutual agreement otherwise, the Audit provisions set forth in Section 10.5.9 of this Attachment shall govern.

10.8 Transit Traffic

10.8.1 Each Party shall provide tandem switching and transport services for the other Party's Transit Traffic. Rates for Local Transit Traffic and ISP-Bound Transit Traffic shall be the applicable composite rate (i.e., Local Intermediary Charge) as set forth in the Pricing Schedule. Rates for Switched Access Transit Traffic shall be the applicable charges as set forth in the applicable Party's Commission approved Interstate or Intrastate Switched Access tariffs as filed and effective with the FCC or Commission, or reasonable and non-discriminatory web-posted listing if the FCC or Commission does not require filing of a tariff. Billing associated with all Transit Traffic shall be pursuant to MECAB guidelines.

10.8.2 Traffic between NuVox and Wireless Type 1 third parties or a third party CLEC utilizing AT&T switching (including resellers and UNE-P providers) shall not be treated as Transit Traffic from a routing or billing perspective. Traffic originated

by a Wireless Type 1 third party or a third party CLEC utilizing AT&T switching (including resellers and UNE-P providers) shall be treated as AT&T-originated traffic and AT&T shall compensate NuVox for transport and termination of such traffic based on the classification of such traffic as Local Traffic, ISP-Bound Traffic, IntraLATA Toll or Switched Access Traffic in accordance with the terms of this Attachment.

10.8.3 Traffic between NuVox and Wireless Type 2A third parties shall not be treated as Transit Traffic from a routing or billing perspective until AT&T and the Wireless Type 2A carrier have the capability to properly meet-point-bill in accordance with MECAB guidelines. Until such time, such traffic originated by Wireless Type 2A third parties shall be treated as AT&T-originated traffic and AT&T shall compensate NuVox for transport and termination of such traffic based on the classification of such traffic as Local Traffic, ISP-Bound Traffic, IntraLATA Toll or Switched Access Traffic in accordance with the terms of this Attachment.

10.8.4 Traffic between AT&T and Wireless Type 1 third parties or a third party CLEC utilizing NuVox switching shall not be treated as Transit Traffic from a routing or billing perspective. Such traffic originated by a Wireless Type 1 third party or a third party CLEC utilizing NuVox switching shall be treated as NuVox-originated traffic and NuVox shall compensate AT&T for transport and termination of such traffic based on the classification of such traffic as Local Traffic, ISP-Bound Traffic, IntraLATA Toll or Switched Access Traffic in accordance with the terms of this Attachment.

10.8.5 Traffic between AT&T and Wireless Type 2A third parties shall not be treated as Transit Traffic from a routing or billing perspective until NuVox and the Wireless Type 2A carrier have the capability to properly meet-point-bill in accordance with MECAB guidelines. Until such time, such traffic originated by Wireless Type 2A third parties shall be treated as NuVox -originated traffic and NuVox shall compensate AT&T for transport and termination of such traffic based on the classification of such traffic as Local Traffic, ISP-Bound Traffic, IntraLATA Toll or Switched Access Traffic in accordance with the terms of this Attachment.

10.8.6 AT&T agrees to deliver Transit Traffic originated by NuVox to the terminating carrier; provided, however, that NuVox is solely responsible for negotiating and executing any appropriate contractual agreements with the terminating carrier for the exchange of Transit Traffic through the AT&T network. AT&T will not be liable for any compensation to the terminating carrier or to NuVox for transiting NuVox-originated or terminated Transit Traffic. In the event that the terminating third party carrier imposes on AT&T any charges or costs for the delivery of Transit Traffic originated by NuVox, NuVox shall reimburse AT&T for all charges paid by AT&T at a rate no greater than the rate applicable to AT&T for the same type of traffic, provided that AT&T notifies and, upon request, provides NuVox with a copy of such an invoice, if available, or other

equivalent supporting documentation (if an invoice is not available), and proof of payment and other applicable supporting documentation. AT&T will provide such notice and information in a timely, reasonable and nondiscriminatory manner. AT&T shall diligently review, dispute and pay such third party invoices (or equivalent) in a manner that is at parity with its own practices for reviewing, disputing and paying such invoices (or equivalent) when no similar reimbursement provision applies. Notwithstanding the foregoing, if AT&T executes a settlement agreement with a third party after the Effective Date of this Agreement that changes the charges AT&T shall pay for the delivery of traffic to said third party, such new rate shall not be applied to NuVox Transit Traffic originated by NuVox prior to the effective date of such settlement agreement. With respect to such settlement agreements, NuVox's reimbursement obligations shall be at a rate no greater than the rate applicable to AT&T for the same type of traffic. Additionally, the Parties agree that any billing to a third party or other telecommunications carrier under this Section 10.8 shall be pursuant to MECAB procedures.

10.8.7 Except for as provided in Sections 10.8.2, 10.8.3, 10.8.4, and 10.8.5, transit charges as described in this Attachment shall only be assessed on the carrier originating Transit Traffic and shall not be assessed on the terminating carrier.

10.8.8 Transit charges associated with the provisioning of toll free services (e.g., 800/888/877) shall be assessed upon the terminating carrier and shall not be imposed on the originating carrier.

10.9 Records Exchange and Misrouting of Traffic

10.9.1 **Misrouted Traffic**

10.9.1.1 The Parties shall route traffic to each other in a manner consistent with the Trunk Group Architectures selected by the Parties and as set forth in Section 4 of this Attachment 3, except as otherwise set forth in this Agreement (e.g., overflow) or in instances where a third party causes either Party to route traffic in a manner that is inconsistent with this Attachment.

10.9.1.2 In instances of misrouting, either Party may request that the Parties investigate, identify the cause of, and correct misrouting to the extent technically and economically feasible.

10.9.1.3 In the event that misrouting results in either Party's inability to bill or collect revenues from a third party and the Parties disagree as to the liability of the other Party for such revenues, then either Party may pursue the Dispute Resolution procedures set forth in this Agreement.

10.9.2 **Records Exchange**

10.9.2.1 Where feasible and appropriate, the Parties will generate and exchange all available messages for the purpose of billing third parties, including but not limited to CMRS providers and other LECs.

11. BASIC 911 AND E911 INTERCONNECTION

11.1 Basic 911 and E911 provides a caller access to the applicable emergency service bureau by dialing 911.

11.2 Basic 911 Interconnection. AT&T will provide to NuVox a list consisting of each municipality that subscribes to Basic 911 service. The list will also provide, if known, the E911 conversion date for each municipality and, for network routing purposes, a ten-digit directory number representing the appropriate emergency answering position for each municipality subscribing to 911. NuVox will be required to arrange to accept 911 calls from its customers in municipalities that subscribe to Basic 911 service and translate the 911 call to the appropriate 10-digit directory number as stated on the list provided by AT&T. NuVox will be required to route the call to the appropriate PSAP. When a municipality converts to E911 service, NuVox will be required to begin using E911 procedures.

11.3 E911 Interconnection. NuVox shall install a minimum of two (2) dedicated trunks originating from its Serving Wire Center and terminating to the appropriate E911 tandem. The Serving Wire Center must be in the same LATA as the E911 tandem. The dedicated trunks shall be, at a minimum, DS0 level trunks configured as part of a digital (1.544 Mb/s) interface (DS1 facility). The configuration shall use CAMA-type signaling with MF pulsing that will deliver ANI with the voice portion of the call. If the user interface is digital, MF pulses as well as other AC signals shall be encoded per the u-255 Law convention. NuVox will be required to provide AT&T daily updates to the E911 database. NuVox will be required to forward 911 calls to the appropriate E911 tandem along with ANI based upon the current E911 end office to tandem homing arrangement as provided by AT&T. If the E911 tandem trunks are not available, NuVox will be required to route the call to a designated seven (7)-digit or ten (10)-digit local number residing in the appropriate PSAP. This call will be transported over AT&T's interoffice network and will not carry the ANI of the calling party. NuVox shall be responsible for providing AT&T with complete and accurate data for submission to the 911/E911 database for the purpose of providing 911/E911 to its customers.

11.4 Rates. Recurring and nonrecurring rates associated with trunk groups for 911 service are as set forth in Section 3.3.1 of this Attachment.

11.5 The detailed practices and procedures for 911/E911 interconnection are contained in the CLEC Users Guide to E911 for Facility-Based Providers, which can be

found at http://wholesale.att.com/reference_library/guides/html/e911_guides.html.

12. FRAME RELAY SERVICE INTERCONNECTION

12.1 In addition to the Local Interconnection services set forth above, AT&T will offer a network to network Interconnection arrangement between AT&T's and NuVox's frame relay switches as set forth below. The following provisions will apply only to Frame Relay Service and Exchange Access Frame Relay Service and Managed Shared Frame Relay Service in those states in which NuVox is certified and providing Frame Relay Service as a Local Exchange Carrier and where traffic is being exchanged between NuVox and AT&T Frame Relay Switches in the same LATA.

12.2 At NuVox's request, the Parties agree to establish two-way Frame Relay facilities between their respective Frame Relay Switches to the mutually agreed upon Frame Relay Service point(s) of interconnection(s) within the LATA. All IPs shall be within the same Frame Relay Network Serving Areas as defined in Section A40 of AT&T's General Subscriber Service Tariff except as set forth in this Attachment.

12.3 Such interconnection will be established where AT&T and NuVox have Frame Relay Switches in the same LATA. Where there are multiple Frame Relay switches in one (1) central office, an interconnection with any one (1) of the switches will be considered an interconnection with all of the switches at that central office for purposes of routing packet traffic.

12.4 The Parties agree to provision local and intraLATA Frame Relay Service and Exchange Access Frame Relay Service and Managed Shared Frame Relay Service (both intrastate and interstate) over Frame Relay interconnection facilities between the respective Frame Relay switches and the IPs.

12.5 The Parties agree to assess each other reciprocal charges for the facilities that each provides to the other according to the Percent Local Circuit Use Factor ("PLCU"), determined as follows:

12.5.1 If the data packets originate and terminate in locations in the same LATA, and are consistent with the local definitions of the Agreement, the traffic is considered local. Frame Relay framed packet data is transported within Virtual Circuits ("VC"). For the purposes of this Agreement, if all the data packets transported within a VC remain within the LATA, then consistent with the local definitions in this Agreement, the traffic on that VC is local ("Local VC").

12.5.2 If the originating and terminating locations of the two-way packet data traffic are not in the same LATA, the traffic on that VC is interLATA ("InterLATA VC").

12.5.3 The PLCU is determined by dividing the total number of Local VCs, by the total number of VCs on each Frame Relay facility. To facilitate implementation, NuVox may determine its PLCU in aggregate, by dividing the total number of Local VCs in a given LATA by the total number VCs in that LATA. The Parties agree to renegotiate the method for determining PLCU, at AT&T's request, and within ninety (90) days, if AT&T notifies NuVox that it has found that this method does not adequately represent the PLCU.

12.5.4 If there are no VCs on a facility when it is billed, the PLCU will be zero (0).

12.6 AT&T will provide the circuit between the Parties' respective Frame Relay Switches. The Parties will be compensated as follows: AT&T will invoice, and NuVox will pay, the total nonrecurring and recurring charges for the circuit based upon the rates set forth in AT&T's Interstate Access Tariff, FCC No. 1. NuVox will then invoice, and AT&T will pay, an amount calculated by multiplying the AT&T billed charges for the circuit by one-half of NuVox's PLCU.

12.7 The Parties agree to compensate each other for Frame Relay network-to-network interface ("NNI") ports based upon the NNI rates set forth in AT&T's Interstate Access Tariff, FCC No. 1. Compensation for each pair of NNI ports will be calculated as follows: AT&T will invoice, and NuVox will pay, the total nonrecurring and recurring charges for the NNI port. NuVox will then invoice, and AT&T will pay, an amount calculated by multiplying the AT&T billed nonrecurring and recurring charges for the NNI port by NuVox's PLCU.

12.8 Each Party agrees that there will be no charges to the other Party for its own subscriber's Permanent Virtual Circuit ("PVC") rate elements for the local PVC segment from its Frame Relay switch to its own subscriber's premises. PVC rate elements include the Data Link Connection Identifier ("DLCI") and Committed Information Rate ("CIR").

12.9 For the PVC segment between the NuVox and AT&T Frame Relay switches, compensation for the PVC charges is based upon the rates in AT&T's Interstate Access Tariff, FCC No. 1.

12.10 Compensation for PVC rate elements will be calculated as follows:

12.10.1 If NuVox orders a VC connection between a AT&T subscriber's PVC segment and a PVC segment from the AT&T Frame Relay switch to the NuVox Frame Relay switch, AT&T will invoice, and NuVox will pay, the total nonrecurring and recurring PVC charges for the PVC segment between the AT&T and NuVox Frame Relay switches. If the VC is a Local VC, NuVox will then invoice and AT&T will pay, the total nonrecurring and recurring PVC charges billed for that segment. If the VC is not local, no compensation will be paid to NuVox for the PVC segment.

12.10.2 If AT&T orders a Local VC connection between a NuVox subscriber's PVC segment and a PVC segment from the NuVox Frame Relay switch to the AT&T Frame Relay switch, AT&T will invoice, and NuVox will pay, the total nonrecurring and recurring PVC and CIR charges for the PVC segment between the AT&T and NuVox Frame Relay switches. If the VC is a Local VC, NuVox will then invoice and AT&T will pay the total nonrecurring and recurring PVC and CIR charges billed for that segment. If the VC is not local, no compensation will be paid to NuVox for the PVC segment.

12.10.3 The Parties agree to compensate each other for requests to change a PVC segment or PVC service order record, according to the Feature Change charge as set forth in the AT&T access tariff AT&T Tariff FCC No. 1.

12.10.4 If NuVox requests a change, AT&T will invoice and NuVox will pay a Feature Change charge for each affected PVC segment.

12.10.5 If AT&T requests a change to a Local VC, NuVox will invoice and AT&T will pay a Feature Change charge for each affected PVC segment.

12.10.6 The Parties agree to limit the sum of the CIR for the VCs on a DS1 NNI port to not more than three (3) times the port speed, or not more than six (6) times the port speed on a DS3 NNI port.

12.10.7 Except as expressly provided herein, this Agreement does not address or alter in any way either Party's provision of Exchange Access Frame Relay Service, Managed Shared Frame Relay Service or interLATA Frame Relay Service. All charges by each Party to the other for carriage of Exchange Access Frame Relay Service or interLATA Frame Relay Service are included in the AT&T access tariff AT&T Tariff FCC No. 1.

12.11 NuVox will identify and report quarterly to AT&T the PLCU of the Frame Relay facilities it uses, per Section 12.5.3 above.

12.12 Either Party may request a review or audit of the various service components, consistent with the provisions of Section E2 of the AT&T State Access Services tariffs or Section 2 of the AT&T FCC No.1 Tariff.

Exhibit A

Basic Architecture

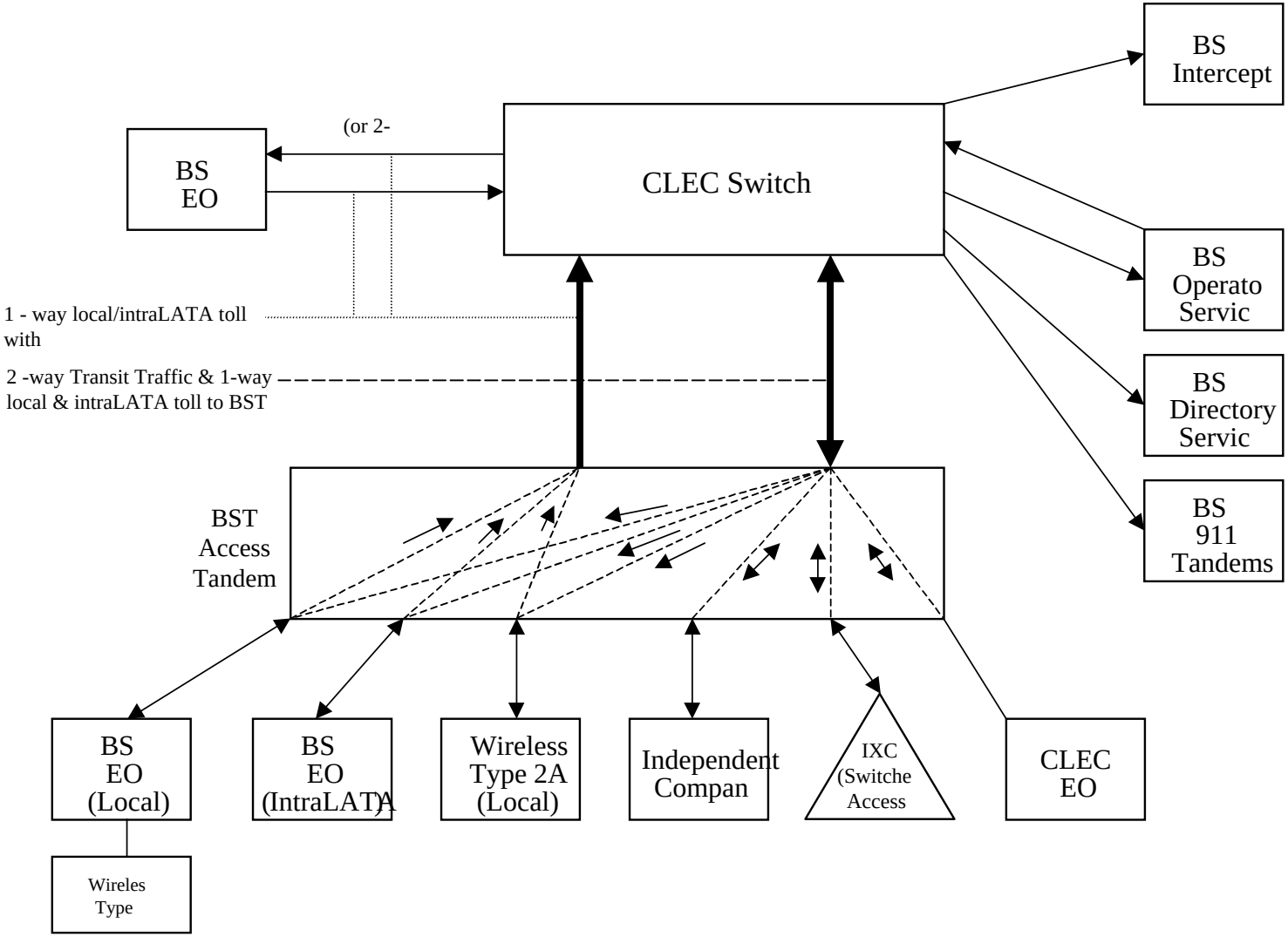

One-Way Architecture

Exhibit B

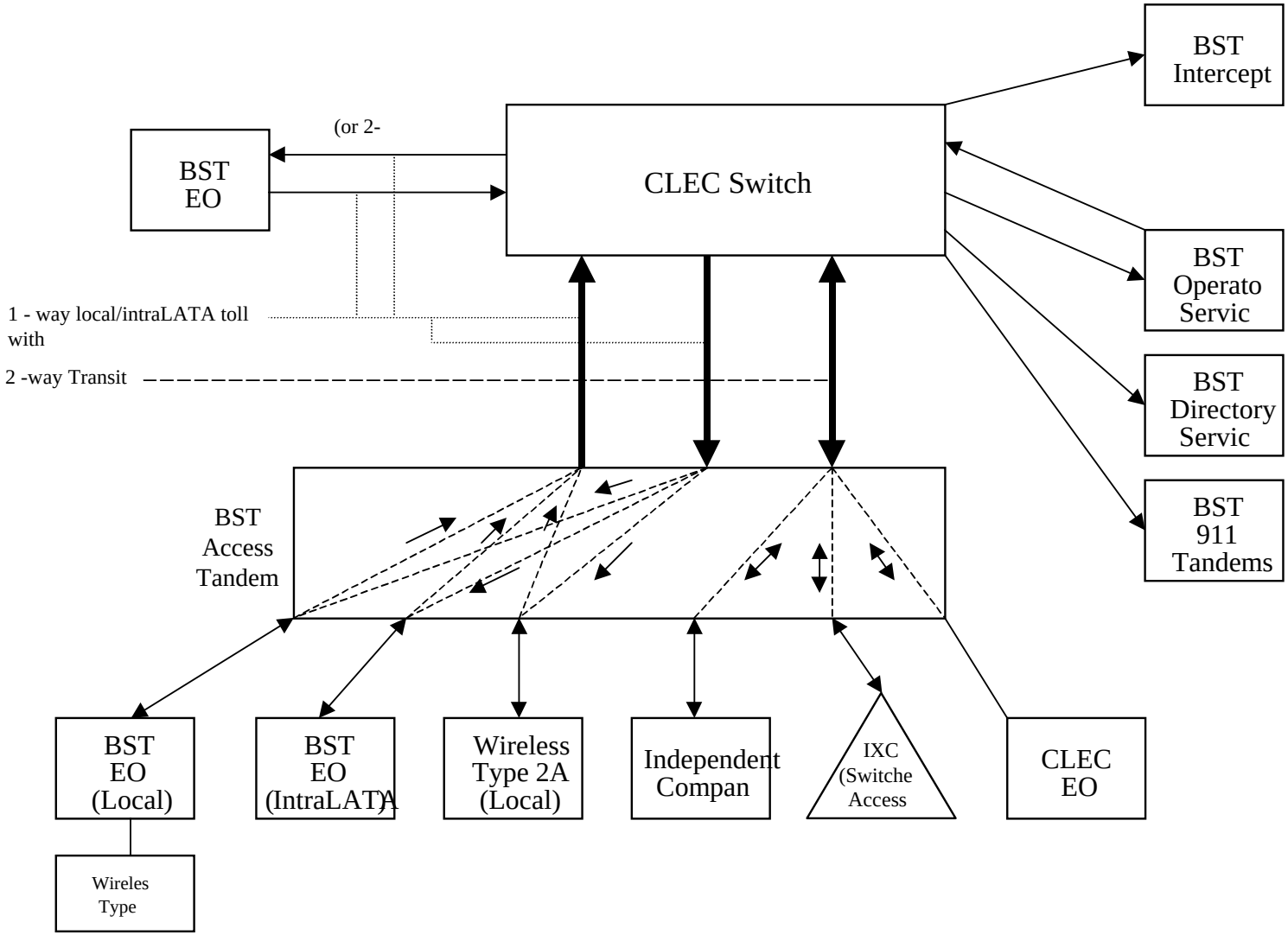

Exhibit C

Two-Way Architecture

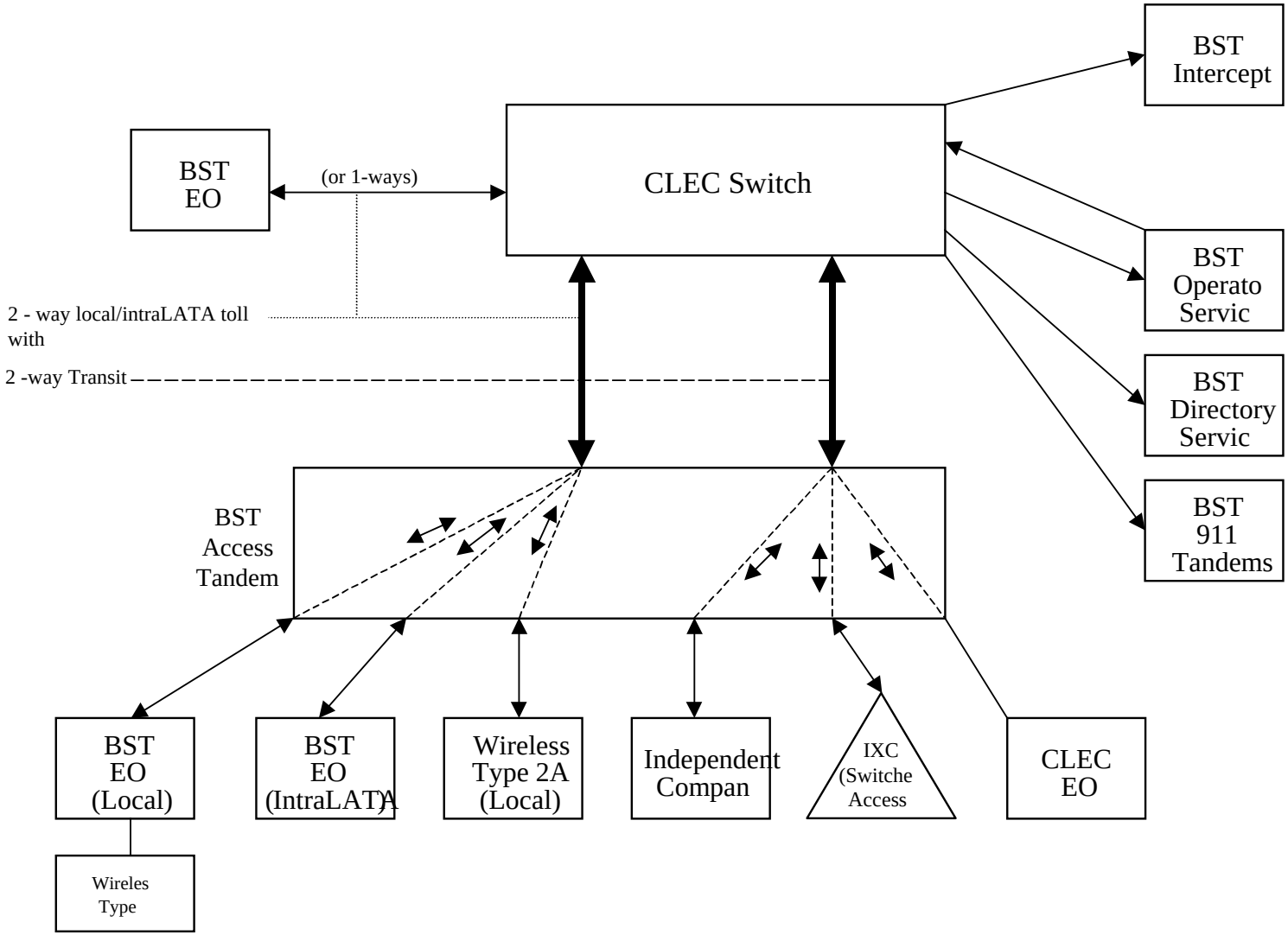

Exhibit D

Supergroup Architecture

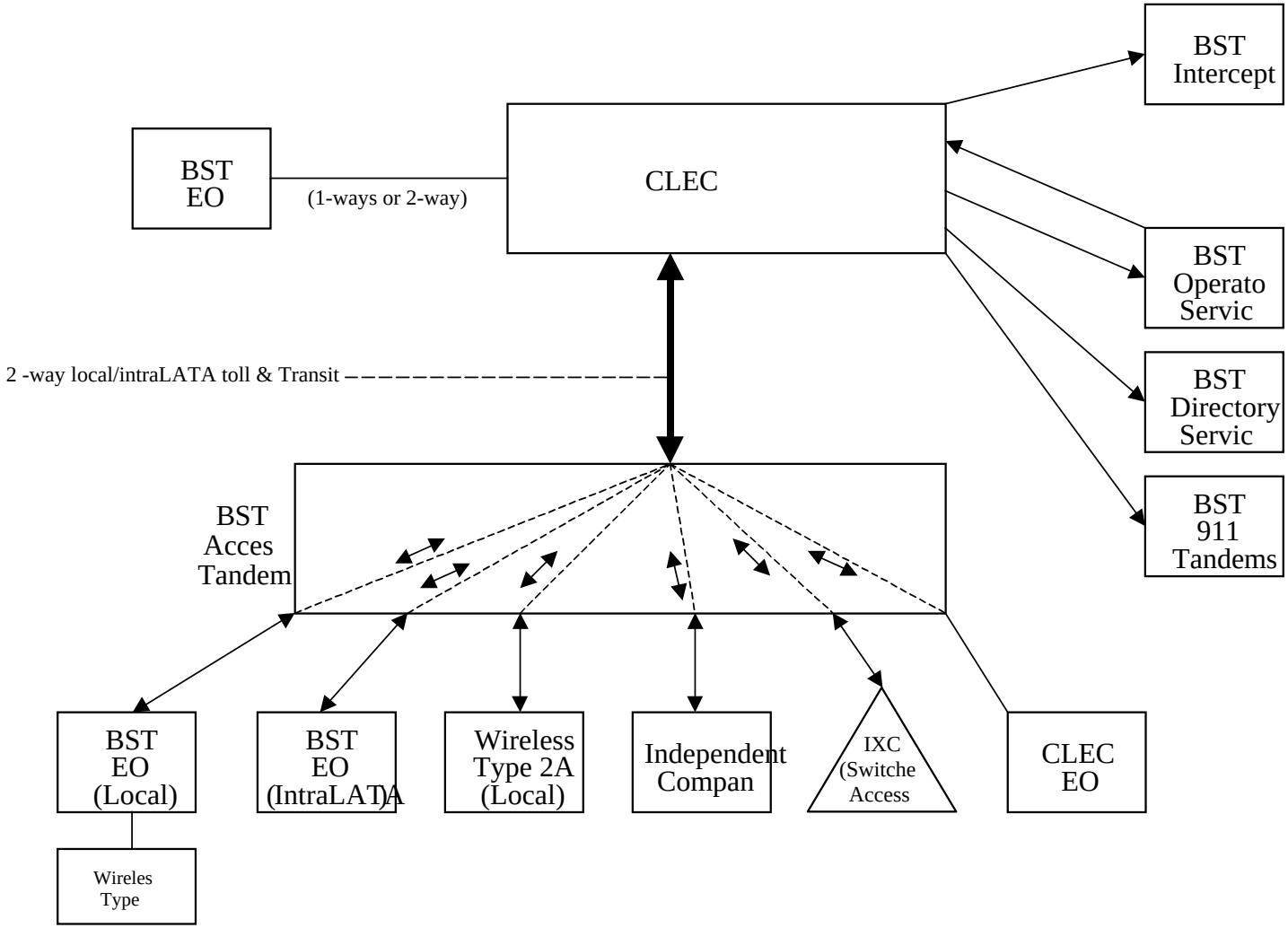

AT&T SE Jurisdictional Factors Reporting Guide

Issue 7.0

July 6, 2009

Revisions 3
1.0 Introduction 4
2.0 Jurisdictions 4
3.0 Factors 5
3.1 General 5
3.2 PIU – Percent Interstate Use 5
3.3 PLU – Percent Local Use 6
4.0 Service Reporting Requirements 6
4.1. AT&T SE Switched Access (SWA) Feature Group A (FGA) PIU (PIUA) 6
4.2. AT&T SE SWA Feature Group B (FGB) PIU (PIUB) 6
4.3. AT&T SE SWA Feature Group D (FGD) (TPIU) 7
4.4 AT&T SE Local Interconnection PLU 7
4.5 AT&T SE SWA 500 Service PIU (ZPI5) 8
4.6 AT&T SE SWA 700 Service PIU (ZP17) 8
4.7 AT&T SE SWA 8XX Toll Free Dialing Ten Digit Screening (ZP18) 9
4.8 AT&T SE SWA 900 Service (ZP19) 9
4.9. AT&T SE Percent Common Line (PCL) 9
4.10. AT&T SE SWA Transport Percent Interstate Use – Entrance Facility (“PIUE”) 9
4.11. AT&T SE Local Interconnection Transport PLF 10
4.12 AT&T SE CCS7 Access Arrangement 11
4.12a. AT&T SE CCS7 Access Arrangement Interstate Use - SPIU 11
4.12b. AT&T SE CCS7 Access Arrangement Local Use – SPLU 11
4.13. AT&T SE Line Information Data Base Service (LIDB) 11
5.0 Report Process 12
6.0 Frequency of Reporting 12
7.0 Audits 13
7.1 Audit Requests 13
7.2 Audit Compliance 13
8.0 Ordering 14

Revisions

Issue 1.0

The initial version of the *BellSouth Jurisdictional Factors Reporting Guide* was issued on August 15, 2001, under the title BellSouth Jurisdictional Factors Reporting Guide.

Issue 2.0

Incorporated references to *RF-3995 Jurisdictional Factor Report Form* – issued on December 21, 2001.

Issue 3.0

Added minor clarification concerning value to be used if PLF or PLU factors are not reported – issued on August 2, 2002.

Issue 4.0

Added Clarification concerning reporting of SPIU Factor and added language describing SPLU Factor and calculation of intrastate of non-local traffic – issued on October 17, 2002.

Issue 5.0

Revised the e-mail address that is utilized to report jurisdictional factors by electronic mail – issued on December 3, 2003.

Issue 6.0

Revisions to the entire document to clarify and simplify the reporting process. Added section 4.9, BellSouth Common Line (PCL)

Issue 7.0

Revisions to the entire document to update name from BellSouth to AT&T SE, and add new links and email addresses for Jurisdictional Factor Report delivery.

1.0 Introduction

Jurisdictional factors are utilized to apportion the billing of AT&T SE Switched Access and Local Interconnection Services between the interstate, intrastate and local jurisdictions. The rates, terms and conditions applicable to the provision of services are determined based upon the jurisdictional use of the service. This document serves as a supplemental guide to the AT&T SE tariffs and contracts for the preparation and reporting of the various jurisdictional factors related to Switched Access and Local Interconnection Services.

NOTE: This guide does not apply to AT&T SE Special Access Services

In general, Interstate factors are required for Switched Access Services and Local Interconnection Services to apportion the billing between the state and interstate jurisdictions. Competitive Local Exchange Carriers (CLECs) are also required to report Local factors in addition to Interstate factors to further apportion their intrastate use of Local Interconnection services between the state and local jurisdiction. Failure to report values for Local Factors shall result in the default value of zero percent being applied for these factors. The local jurisdiction is considered a subset of the intrastate jurisdiction in the determination and application of factors. The following sections provide information concerning the determination of factors, the application of factors, reporting procedures and customer records requirements.

2.0 Jurisdictions

There are three basic jurisdictions related to AT&T SE Switched Access and Local Interconnection Services. These are the Interstate, Intrastate and the Local jurisdictions. The jurisdiction is determined based upon the physical locations of the origination and termination points of the call.

- A call that originates in a different state than the terminating location or called party shall be designated as interstate traffic, unless the path is within an approved Local Calling area which crosses state boundaries.
- A call that originates from a location that is in the same state as the terminating physical location or called party shall be designated as an intrastate call, unless the call is within a defined Local Calling area.
- A call that originates and terminates within the same local calling area as specified in the applicable contract or tariff is designated as local traffic.

The jurisdiction of a call is determined solely by the geographic, or physical, location of the party initiating the call and the geographic, or physical, location of the called party. The origination and termination points are not determined based upon the carrier's network entry and exit points. When multiple networks or carriers are involved, a particular carrier's transport of the service may be totally within a state boundary, however, the ultimate end points of the call or information exchange may be in different states. In this situation, the traffic shall be designated as interstate for all carriers even though a particular carrier's transport service begins and ends within a state boundary. The jurisdiction of a call is not affected by the manner in which the call is routed through the telecommunications network.

The location of the origination or termination end points is determined based upon the location of the serving central offices. If a call terminates to an office that is associated with a LATA in an adjoining state (cross boundary) the call is considered to complete in the state where the central office is located.

3.0 Factors

3.1 General

AT&T SE Jurisdictional factors are projections of the percentages of use of switched access and interconnection services for billing purposes based on examination of carrier-specific traffic for a recent period. Carriers shall provide factors to AT&T SE with the first request for each service in each state and are updated quarterly based upon the most recent three months of data or other mutually-agreed period. Carriers shall report factors to AT&T SE for the initial request via *RF-3995 Jurisdictional Factor Report*.

Carriers shall report quarterly updates using the same form as noted above. If AT&T SE does not receive quarterly updates on a factor, AT&T SE will assume that the percentages are the same as previously provided. If a valid quarterly report has never been received then AT&T SE may utilize the factor(s) provided with the initial order for service, the most recent audit results if an audit has been performed or the default value for the particular factor.

In cases where sufficient data is available, then AT&T SE will determine the factors to be utilized for billing. In such cases, subsequent quarterly updates from the customer for factors already determined by AT&T SE will not be used.

3.2 PIU – Percent Interstate Use

This factor is the percentage of use that is interstate. Depending on the specific Switched Access or Local Interconnection service involved, the actual “factor” to be reported may vary. See Section 4 for more details.

It is incumbent upon the carrier that is billed for originating/terminating traffic to the AT&T SE Network to report PIU factors to AT&T SE that are representative of the actual jurisdiction of traffic delivered to AT&T SE.

The PIU factor is calculated as follows, with “use” being defined based on the type of factor being reported:

$$\frac{\text{Total Interstate Use}}{\text{Total Use}}$$

Total Use includes interstate, intrastate and local usage. This percentage is calculated on a statewide basis. Both Interexchange Carriers and Facility Based Competitive Local Exchange Carriers (CLECs) are required to report PIU factors per their Access Carrier Name Abbreviation (ACNA).

3.3 PLU – Percent Local Use

This factor is the percentage of intrastate use that is local. Depending on the specific Switched Access or Local Interconnection service involved, the actual "factor" to be reported may vary. See Section 4 for more details.

It is incumbent upon the CLEC that is billed for local interconnection to the AT&T SE Network to report PLU factors to AT&T SE that are representative of the actual jurisdiction of traffic delivered to AT&T SE.

The PLU factor is calculated as follows, with "use" being defined based on the type of factor being reported:

$$\frac{\text{Total Local Use}}{\text{Total Intrastate Use}}$$

Alternatively, the PLU factor can be calculated using the following calculation:

$$\frac{\text{Total Local Use}}{\text{Total Use Times } \textit{(1-Total Percent Interstate Use)}}$$

Total Use includes interstate, intrastate and local use. This percentage is calculated on a statewide basis. Both Interexchange Carriers and Facility Based Competitive Local Exchange Carriers (CLECs) are required to report PLU factors per their Access Carrier Name Abbreviation (ACNA).

4.0 Service Reporting Requirements

Jurisdictional factors shall be developed and reported for particular services as specified in the AT&T SE Tariffs and as specified in applicable contracts that are provisioned for a carrier. Factor reporting requirements for these services are discussed in the following subsections.

4.1. AT&T SE Switched Access (SWA) Feature Group A (FGA) PIU (PIUA)

Usage based rate elements are billed for FGA in both the originating and terminating directions. This usage shall be apportioned to the intrastate and interstate jurisdictions. A single PIU factor shall be reported at the state level to apportion all the applicable usage (originating, terminating and transit) between the intrastate and interstate jurisdictions. All usage received from or delivered to the AT&T SE network and through the AT&T SE Network to connecting carriers shall be considered in the determination of the PIU for FGA.

$$\frac{\text{Total Interstate Originate/Terminate/Transit FG-A usage}}{\text{Total Originate/Terminate/Transit FG-A usage}}$$

4.2. AT&T SE SWA Feature Group B (FGB) PIU (PIUB)

Usage based rate elements are billed for FGB in both the originating and terminating directions. This usage shall be apportioned to the intrastate and interstate

jurisdictions. A single PIU factor shall be reported at the state level to apportion all the applicable usage (originating, terminating and transit) between the intrastate and interstate jurisdictions. All usage received from or delivered to the AT&T SE network and through the AT&T SE Network to connecting carriers shall be considered in the determination of the PIU for FGB.

$$\frac{\text{Total Interstate Originate/Terminate/Transit FG-B usage}}{\text{Total Originate/Terminate/Transit FG-B usage}}$$

4.3. AT&T SE SWA Feature Group D (FGD) (TPIU)

Usage based rate elements are billed for FGD in both the originating and terminating directions. AT&T SE is able to determine the jurisdiction of AT&T SE-originated FGD traffic ("originating usage") per its own billing records generated with each call. Therefore a factor to apportion usage for originating FGD traffic is not required from the reporting carrier. Originating traffic consists of calls where the location of the calling number is served from a AT&T SE end office that is connecting to a carrier for completion to the called number location.

The usage terminating to AT&T SE from an interconnected carrier is apportioned between the intrastate and interstate jurisdictions per a Terminating Percent Interstate Usage ("TPIU") factor. All terminating Switched Access FGD, all terminating Local Interconnection traffic and all usage delivered to the AT&T SE network and passed through the AT&T SE Network to connecting carriers shall be considered in the determination of the TPIU with the exception of "terminating party pays" usage (e.g. 800 terminating traffic) and is calculated as follows:

$$\frac{\text{Total Interstate Terminating MOUs}}{\text{Total Terminating MOUs}}$$

The TPIU should be reported via the *RF-3995 Jurisdictional Factor Report* with the initial request for service, and on a quarterly basis. A single TPIU factor for terminating FGD traffic shall be reported at the state level to apportion the applicable usage based elements between the intrastate and interstate jurisdictions.

Local traffic shall also be included when determining the TPIU. If the reporting carrier functions as an Interexchange and Local carrier then all of the terminating usage sent to AT&T SE will be apportioned between the state and interstate jurisdictions per a single TPIU. This factor shall be reported for each state in which a carrier operates and shall provide separate state-specific factors for each Access Carrier Name Abbreviation (ACNA).

A TPIU shall be reported by CLECs even if it does not terminate any interstate traffic to the AT&T SE network. In this situation, the CLEC should report a TPIU equal to zero (0.00) to indicate that all of its traffic is Intrastate and Local.

4.4 AT&T SE Local Interconnection PLU

The percent of terminating usage to be billed per the Local Interconnection contracts is determined by the PLU factor. Reporting of this factor is required by Facility Based CLECs and IXCs who exchange local traffic with AT&T SE.

The PLU reported via the *RF-3995 Jurisdictional Factor Report* **for the initial request for service** will be used to apportion the percent of intrastate terminating usage to be billed as local. Quarterly updates for this local transport factor should also be made under PLU, via the *RF-3995 Jurisdictional Factor Report.*

This factor is the percentage of intrastate terminating usage that is categorized as Local Traffic as such term is defined in the Local Interconnection Agreement. For purposes of this guide, the total intrastate usage includes all local usage and non-local usage within a state. The local jurisdiction is applicable to carriers that are terminating local traffic from their network to the AT&T SE network.

CLECs that utilize AT&T SE switching i.e. Resale and/or Wholesale Local Platform (WLP) to provision local services are not required to report PLU factors. Interexchange Carriers that do not originate or terminate local traffic are not required to report PLU factors,

"Terminating party pays" usage (e.g. 800 terminating traffic) shall be excluded from the PLU calculations. PLU is calculated as follows:

$$\frac{\text{Total Local Terminating MOUs}}{\text{Total Intrastate Terminating MOUs}}$$

The total intrastate terminating minutes can be determined by multiplying the total terminating minutes by (1- TPIU). Therefore, the PLU may also be calculated as follows:

$$\frac{\text{Total Local Terminating MOUs}}{\text{(Total Terminating MOUs) x (1-TPIU)}}$$

This factor is calculated on a statewide basis by Access Carrier Name Abbreviation (ACNA).

4.5 AT&T SE SWA 500 Service PIU (ZPI5)

The SWA 500 PIU factor will be applied to the carrier's originating 500 Service MOUs to apportion the usage between intrastate and interstate jurisdiction. This factor represents the percentage of originating 500 minutes that are interstate jurisdiction, and should be calculated as follows:

$$\frac{\text{Total Interstate Originating 500 MOUs}}{\text{Total Originating 500 MOUs}}$$

4.6 AT&T SE SWA 700 Service PIU (ZP17)

The SWA 700 PIU factor will be applied to the carrier's originating 700 Service MOUs to apportion the usage between intrastate and interstate jurisdiction. This factor represents the percentage of originating 700 minutes that are interstate jurisdiction, and should be calculated as follows:

$$\frac{\text{Total Interstate Originating 700 MOUs}}{\text{Total Originating 700 MOUs}}$$

4.7 AT&T SE SWA 8XX Toll Free Dialing Ten Digit Screening (ZP18)

The SWA 8XX PIU factor will be applied to the carrier's originating 8XX Service MOUS and queries to apportion the usage and queries between the intrastate and interstate jurisdiction. This factor represents the percentage of originating 8XX minutes and queries that are interstate jurisdiction, and should be calculated as follows:

$$\frac{\text{Total Interstate Originating 8xx MOUs}}{\text{Total Originating 8xx MOUs}}$$

4.8 AT&T SE SWA 900 Service (ZP19)

The SWA 900 PIU factor will be applied to the carrier's originating 900 Service MOUS to apportion the usage between the intrastate and interstate jurisdiction.

This factor represents the percentage of originating 900 minutes that are interstate jurisdiction, and should be calculated as follows:

$$\frac{\text{Total Interstate Originating 900 MOUs}}{\text{Total Originating 900 MOUs}}$$

4.9. AT&T SE Percent Common Line (PCL)

A Carrier Common Line charge may apply for minutes which originate from or terminate to a AT&T SE End-User. This factor is used to define the percentage of originating 700, 8XX or 900 usage which terminates in a AT&T SE SWA service that is already assessed a Carrier Common Line charge. This factor should be reported per jurisdiction per service (interstate and intrastate) to define how much of the originating 700, 8XX, or 900 usage should be billed at the "originating CCL" rate. Otherwise, all originating 700, 8XX, 900 usage will be billed at the "terminating CCL" rate.

The ZPI7, ZPI8 and ZPI9 factors referenced in sections 4.6, 4.7 and 4.8 apportion the usage between interstate and intrastate jurisdictions. The PCL defines how much of the usage in each jurisdiction should be billed at the originating CCL rate.

4.10. AT&T SE SWA Transport Percent Interstate Use – Entrance Facility ("PIUE")

AT&T SE SWA Transport PIUE is applicable to the following SWA Transport Services:

- SWA Local Channel
- SWA Dedicated Interoffice Channels
- SWA Channelization Equipment
- Local Interconnection Dedicated Transport
- Dedicated End Office Trunk Port Service
- Dedicated Tandem End Office Trunk Port Service
- SWA Expanded Interconnection Cross-Connects

The PIUE may also be applied to other flat-rated charges not specifically covered by other PIU categories**.**

The utilization of these transport services is considered in combination to determine the PIUE factor. The PIUE will be applied to the recurring billing elements for these services to apportion billing between the intrastate and interstate jurisdictions. The total jurisdictional use of these services shall be considered when determining the PIUE factor including all originating and terminating usage, and should be calculated as follows:

$$\frac{\text{Total Interstate MOUs}}{\text{Total MOUs}}$$

The initial order for service carries the Switched Access transport factor in the PIU field on the ASR. The PIUE for the initial request shall also be reported via *RF-3995* Quarterly updates for this local transport factor should be made under PIUE, via the *RF-3995 Jurisdictional Factor Report.*

4.11. AT&T SE Local Interconnection Transport PLF

Reporting of this factor is required by Facility Based CLECs utilizing AT&T SE Local Interconnection transport services. In addition, IXCs that also function as CLECs and utilize Switched Dedicated Transport and/or Local Interconnection transport to interconnect with the AT&T SE Network for the exchange of local traffic are required to report a PLF.

The initial order for service carries the Switched Access transport factor in the PIU field on the ASR. The PIUE for the initial request shall also be reported via *RF-3995* Quarterly updates for this local transport factor should be made under PIUE, via the *RF-3995 Jurisdictional Factor Report.*

This factor is utilized to apportion the use of SWA Local Channel, SWA Dedicated Interoffice Channels, SWA Channelization Equipment, Local Interconnection Dedicated Transport, Tandem/End Office Ports and various other flat-rated services to the Local Jurisdiction for billing purposes (per tariff and contractual agreements). This factor is developed in conjunction with the PIUE. The PLF represents the percentage of the intrastate use of these services that is jurisdictionally local.

As with PIU factors for non-usage sensitive billed services, the total use of these services is considered in determining the factor (i.e. all originating and terminating usage). The PLF represents the percentage of use of all the Switched Dedicated Transport and Local Interconnection Transport provisioned by AT&T SE that is jurisdictionally local as defined per contract or tariff. The PLF for these services is based upon the usage that is transported by these services as follows:

$$\frac{\text{Total Local MOUs}}{\text{Total Intrastate MOUs}}$$

The total intrastate minutes can be alternatively determined by multiplying the total minutes by (1- PIUE) where PIUE is the factor applicable to Switched Dedicated Transport and Local Interconnection Transport. Therefore the PLF may also be calculated as follows:

$$\frac{\text{Total Local MOUs}}{(\text{Total MOUs}) \times (1\text{-PIUE})}$$

This factor is calculated on a statewide basis and reported per Access Carrier Name Abbreviation (ACNA).

4.12 AT&T SE CCS7 Access Arrangement

4.12a. AT&T SE CCS7 Access Arrangement Interstate Use - SPIU

If a carrier has access to CCS7 Signaling Services monitoring software, then that carrier may use this software to generate the SPIU on its signaling with AT&T SE and then report this factor in the same format detailed herein.

If, however, a carrier does not have access to CCS7 Signaling Services monitoring software, then a SPIU for CCS7 Signaling Services shall be developed and reported based upon the associated billed minutes of use for SWA Usage-based services. The billed minutes that are jurisdictionally ***interstate*** as a percentage of the total billed minutes shall be reported as the CCS7 Access SPIU. The calculation would be made based on:

$$\frac{\text{Total Interstate MOUs}}{\text{Total MOUs}}$$

4.12b. AT&T SE CCS7 Access Arrangement Local Use – SPLU

If a carrier has access to CCS7 Signaling Services monitoring software, then that carrier may use this software to generate the SPLU on its signaling with AT&T SE and then report this factor in the same format detailed herein.

If, however, a carrier does not have access to CCS7 Signaling Services monitoring software, then a SPLU for CCS7 Signaling Services shall be developed and reported based upon the associated billed minutes of use for SWA Usage based services and Local Interconnection services. The billed minutes that are jurisdictionally ***local*** as a percentage of the total ***intrastate*** billed minutes shall be reported as the CCS7 Access SPLU. The calculation would be made based on:

$$\frac{\text{Total Local MOUs}}{\text{Total Intrastate MOUs}}$$

Or alternatively:

$$\frac{\text{Total local MOUs}}{\text{Total MOUs times (1-SPIU)}}$$

Where the customer is a “Third Party Provider” of CCS7 Access services then the SPLU will be developed based upon a weighted average of all of that provider’s “Third Party Customer’s” end user traffic.

4.13. AT&T SE Line Information Data Base Service (LIDB)

NOTE: This service is first apportioned between the Local and non-Local use. This is an exception to the way other services are defined for jurisdictional allocation.

There are two factors reported for LIDB service, a PIU factor and a Percent CLEC LIDB Usage (PCLU) factor. The PCLU, if applicable, defines the percentage of the total LIDB use that is jurisdictionally local. The remaining use is then apportioned between Interstate and Intrastate based on the PIU factor provided for this service. The basic formula for the PCLU calculation is as follows:

$$\frac{\text{Number of Local Queries}}{\text{Total Number of Queries}}$$

After the PCLU is determined, the LIDB PIU shall be determined. After the carrier subtracts the number of local queries from the total LIDB queries, the carrier determines the percentage of queries that are jurisdictionally interstate). The formula for the LIDB PIU is as follows:

$$\frac{\text{Number of Interstate Queries}}{(\text{Total Number of Queries}) - (\text{Number of Local Queries})}$$

5.0 Report Process

The following summarizes the major steps that should be undertaken by the customer to develop and report jurisdictional factors:

- Install/modify systems to capture usage data with sufficient detail to accurately determine and aggregate the usage to the appropriate jurisdiction, by state and by ACNA
- Create/Modify call detail records for traffic segregation to the appropriate service and jurisdiction
- Record and accumulate usage data
- Analyze usage data
- Calculate the factors
- Report the initial and the quarterly factors, if required
- Maintain sufficient records of the data resources utilized to determine jurisdictional factors to comply with audit verification requirements as specified in the BellSouth Tariffs and applicable contractual agreements

6.0 Frequency of Reporting

Jurisdictional factors shall be updated on a quarterly basis during the months of January, April, July and October. These updates shall be received no later than thirty (30) days after the first day in each of these months. These factors shall represent the actual use for the three (3) previous months ending on the last day of December, March, June and September respectively. These factors will be applied to the next quarter's billing. These updates shall be provided in writing by letter or electronic mail, the preferred option, and sent to the following address:

US Mail
AT&T
600 N 19th St, 22nd Floor
Birmingham, AL 35203

Or Electronic Mail: piu.reports@att.com

An e-mail will be returned indicating receipt of reports submitted by electronic mail. The recommended format for updates is via the online form *RF-3995 Jurisdictional Factor Report*.

AT&T SE will notify the carrier, by letter or email, when AT&T SE has sufficient information to calculate a specific jurisdictional factor type. That notification will include the type, factors to be used, and the effective date. Unless otherwise notified, AT&T SE will continue to update the specific identified factor(s) for subsequent quarters per the above schedule and the carrier will be exempt from further responsibility to report those specific quarterly factor updates.

In the event the customer does not provide a projected jurisdictional factor(s), AT&T SE will assume percentages to be the same as those percentages provided in the last quarterly report. In cases where an audit may have been conducted and an updated quarterly report has not been submitted subsequent to the audit, AT&T SE will assume the factors to be the most recent audited results. For those cases where a quarterly report has never been received and an audit has not been performed, the default value as found in the Jurisdictional Report Requirements section of the tariffs will be used.

7.0 Audits

7.1 Audit Requests

AT&T SE has the option per its access tariffs or interconnection agreements, as applicable, to initiate an independent, third party audit of the carrier's factors and the process utilized in the development of these factors.

Upon thirty (30) days written notice, AT&T SE may initiate an audit to ensure proper billing of traffic. The audit will be performed by:

- An independent auditor under contract to AT&T SE
- A mutually acceptable independent auditor paid for by AT&T SE
- Or an independent auditor selected and paid for by the carrier

Call detail records from which the factor can be ascertained shall be retained for a minimum of six (6) months. The call detail records will be made available for inspection at an agreed upon location during normal business hours. If requested data is not provided within thirty (30) days of the notice, the carrier shall be in violation of the tariff or the interconnection agreement unless otherwise noted by the interconnection agreement. AT&T SE will not submit more than one (1) audit request per calendar year.

7.2 Audit Compliance

The factor shall be adjusted based upon the audit results. The audited factor shall be applied to the usage for the quarter in which the audit was completed, the quarter prior to the audit, and the two (2) quarters following the completion of the audit. If the audited factor has a variance of twenty per cent (20%) or more from the

reported factor, the carrier shall reimburse AT&T SE for the cost of the audit if the audit was paid for by AT&T SE.

Two (2) quarters after the quarter in which the audit was completed, the carrier may report a revised factor. If the revised factor deviates more than five per cent (5%) or more from the audited factor and the carrier is not able to justify this deviation to AT&T SE's satisfaction, AT&T SE has the option of requesting another audit which shall not be considered the audit for that calendar year.

The carrier may contest the audit within thirty (30) days from the date the audit report has been furnished to the carrier. It is assumed that the audit report is accurate and the audit results shall be applied as previously discussed.

8.0 Ordering

Failure to provide the appropriate factors with the initial request may result in a delay of service. In the event that service is provided and the appropriate factors have not been received, a default factor will be used. As stated in Section 3.1 preceding, jurisdictional factors shall be provided with the initial request for each service in each state and quarterly thereafter. Factors for the initial request shall be reported via *RF-3995 Jurisdictional Factor Report.*

Attachment 4

Collocation

AT&T

COLLOCATION

1. Scope of Attachment

1.1 The rates, terms, and conditions contained within this Attachment shall only apply when NuVox is collocated as a sole occupant or as a Host within an AT&T premises location pursuant to this Attachment. AT&T premises include AT&T Central Offices and Serving Wire Centers; all buildings or similar structures owned, leased, or otherwise controlled by AT&T that house its network facilities; all structures that house AT&T facilities on public rights-of-ways, including but not limited to vaults containing loop concentrators or similar structures; and all land owned, leased, or otherwise controlled by AT&T that is adjacent to AT&T's Central Offices, Serving Wire Centers, buildings and structures (hereinafter "Premises"). AT&T Remote Site Locations ("Remote Site Locations") include cabinets, huts and controlled environmental vaults owned or leased by AT&T that house AT&T Network Facilities. If the Premises occupied by AT&T is leased by AT&T from a third party or otherwise controlled by a third party, special considerations and/or intervals may apply in addition to the terms and conditions contained in this Attachment. AT&T will inform NuVox if a Premises is leased when special considerations and/or intervals may be applicable.

1.2 If AT&T provides collocation to other telecommunications carriers, or to an AT&T Affiliate, AT&T will provide the same collocation to NuVox at rates, terms and conditions no less favorable to NuVox than those provided by AT&T to other telecommunications carriers, or to an AT&T Affiliate.

1.3 Right to Occupy. AT&T shall offer to NuVox collocation on rates, terms, and conditions that are just, reasonable, non-discriminatory and in full compliance with the rules and orders of the FCC and the Commission. Subject to the rates, terms and conditions of this Attachment, where space is available and it is technically feasible, AT&T will allow NuVox to occupy a certain area designated by AT&T within a Premises or on AT&T property upon which the Premises is located of a size which is specified by NuVox and agreed to by AT&T (hereinafter "Collocation Space", or "Remote Site Collocation Space"). To the extent not contained herein, the necessary rates, terms and conditions for collocation at Premises, as defined by the FCC above, shall be negotiated upon reasonable request for collocation at such Premises.

1.4 Space Reservation

1.4.1 Neither AT&T nor any of AT&T's Affiliates may reserve space for future use on more preferential terms than those set forth in Sections 1.4.2 and 1.4.3 of this Attachment.

1.4.2 In all states other than Florida, the size, or rack/bay(s) in a Remote Site Location, specified by NuVox may contemplate a request for space sufficient to accommodate NuVox's growth within a twenty-four (24) month period.

1.4.3 In the State of Florida, the size, or rack/bay(s) in a Remote Site Location, specified by NuVox may contemplate a request for space sufficient to accommodate NuVox's growth within an eighteen (18) month period.

1.5 Space Allocation. AT&T shall use best efforts to accommodate NuVox's requested preferences, if any, including the provision of contiguous space for any subsequent request for collocation. In allocating Collocation Space, AT&T shall not (a) materially increase NuVox's cost or materially delay NuVox's occupation and use of the Collocation Space**,** (b) assign Collocation Space that will impair the quality of service or otherwise limit the service NuVox wishes to offer, (c) reduce unreasonably the total space available for physical collocation at a Premise, or preclude unreasonably physical collocation within the Premises**.** Consistent with the foregoing, AT&T shall assign NuVox collocation space within Premises that utilizes existing infrastructure (e.g., HVAC, lighting and available power), if such space is available for collocation. Space shall not be available for collocation if it is: (a) physically occupied by non-obsolete equipment; (b) assigned to another collocated telecommunications carrier; (c) used to provide physical access to occupied space; (d) used to enable technicians to work on equipment located within occupied space; (e) properly reserved for future use, either by AT&T or another collocated telecommunications carrier; or (f) essential for the administration and proper functioning of Premises. AT&T may segregate Collocation Space and require separate entrances for collocated telecommunications carriers to access their Collocation Space, pursuant to FCC Rules.

1.6 Space Reclamation. In the event of space exhaust within a Premises, AT&T may include in its documentation for the Petition for Waiver filed with the Commission, any unutilized space in the Premises. NuVox will be responsible for the justification of unutilized space within its Collocation Space, if the Commission requires such justification.

1.7 Virtual Collocation Space Reservation. AT&T shall relinquish any space held for future use before denying a request for virtual collocation on the grounds of space limitations, unless AT&T proves to the Commission that virtual collocation at that point is not technically feasible**.**

1.8 Use of Space. NuVox shall use the Collocation Space for the purposes of installing, maintaining and operating NuVox's equipment (to include testing and monitoring equipment) necessary for interconnection or for accessing unbundled network elements in accordance with the Act and FCC and Commission rules.

1.9 The Parties agree to comply with all applicable federal, state, county, local and administrative laws, rules, ordinances, regulations and codes in the performance of their obligations.

1.10 Service Coordination. The Parties shall coordinate, where necessary, to ensure that the Collocation Space is provisioned in accordance with the specifications submitted by NuVox in its Application, as affirmed by the Bona Fide Firm Order ("BFFO") or as jointly amended thereafter. AT&T will provide the necessary infrastructure to support NuVox's request(s) pursuant to this Agreement.

2. Space Availability Report

2.1 Upon request from NuVox and at the NuVox's expense, AT&T will provide a written report (Space Availability Report) describing in detail the space that is available for collocation at a particular Premises. This report will include the amount of Collocation Space available at the Premises requested, the number of collocators present at the Premises, any modifications in the use of the space since the last report on the Premises requested and the measures AT&T is taking to make additional space available for collocation arrangements. A Space Availability Report does not reserve space at the Premises for which the Space Availability Report was requested by NuVox.

2.1.1 The request from NuVox for a Space Availability Report must be in writing and include the Premises street address, as identified in the Local Exchange Routing Guide (LERG) and Common Language Location Identification (CLLI) code of the Premises. CLLI code information is located in the National Exchange Carrier Association (NECA) Tariff FCC No. 4.

2.1.1.1 If NuVox is unable to obtain the CLLI code for the Remote Site Location from, for example, a site visit to the remote site, NuVox may request the CLLI code from AT&T. To obtain a CLLI code for a Remote Site Location directly from AT&T, NuVox should submit to AT&T a Remote Site Interconnection Request (the Request) for the Serving Wire Center CLLI code prior to submitting its request for a Space Availability Report. NuVox should complete all the requested information and submit the Request to AT&T. AT&T will bill the applicable fee as set forth in the Pricing Schedule.

2.1.2 AT&T will respond to a request for a Space Availability Report for a particular Premises within ten (10) calendar days of the receipt of such a request. If AT&T cannot meet the ten (10) calendar day response time, AT&T shall notify NuVox and inform NuVox of the timeframe under which it can respond.

2.2 Remote Site Information. Upon written request, AT&T will provide NuVox with the following information concerning AT&T's remote sites: (i) the address of the remote site; (ii) the CLLI code of the remote site; (iii) the carrier serving area of the remote site; (iv) the designation of which remote sites subtend a particular central office; and (v) the number and address of customers that are served by a particular remote site.

2.3 AT&T will provide this information on a first come, first served basis within thirty (30) calendar days of NuVox's request subject to the following conditions: (i) the information will only be provided on a CD in the same format in which it appears in AT&T's systems; (ii) the information will only be provided for each serving wire center designated by NuVox, up to a maximum of thirty (30) wire centers per NuVox request per month per state, and up to a maximum of one hundred twenty (120) wire centers total per month per state for all CLECs; and (iii) NuVox agrees to pay the cost as set forth in the Pricing Schedule.

3. Collocation Options

3.1 Cageless. AT&T shall allow NuVox to collocate NuVox's equipment and facilities without requiring the construction of a cage or similar structure. AT&T shall allow NuVox to have direct access to NuVox's equipment and facilities in accordance with Section 5.19 below. AT&T shall make cageless collocation available in single rack/ bay increments. Except where NuVox's equipment requires special technical considerations (e.g., special cable racking or isolated ground plane), AT&T shall assign cageless Collocation Space in conventional equipment rack lineups where feasible. For equipment requiring special technical considerations, NuVox must provide the equipment layout, including spatial dimensions for such equipment pursuant to generic requirements contained in Telcordia GR-63-Core, and shall be responsible for compliance with all special technical requirements associated with such equipment.

3.2 Caged. AT&T will make caged collocation available in fifty (50) square foot increments, which should be sufficient enough, to collocate a single rack/bay of equipment. At NuVox's expense, NuVox will arrange with a Supplier certified by AT&T (AT&T Certified Supplier) to construct a collocation arrangement enclosure in accordance with AT&T's reasonable and nondiscriminatory Technical References (TRs) (Specifications), where technically feasible as that term has been defined by the FCC, prior to starting equipment installation. AT&T will provide Specifications to its AT&T Certified Suppliers. Where local building codes require enclosure specifications more stringent than AT&T's enclosure Specifications, NuVox and NuVox's AT&T Certified Supplier must comply with the more stringent local building code requirements. NuVox's AT&T Certified Supplier shall be responsible for filing and receiving any and all necessary permits and/or licenses for such construction. AT&T shall cooperate with NuVox and provide, at NuVox's expense, the documentation, including existing building architectural drawings, enclosure drawings, and Specifications required and necessary for NuVox's AT&T Certified Supplier to obtain the zoning, permits and/or other licenses. NuVox's AT&T Certified Supplier shall bill NuVox directly for all work performed for NuVox pursuant to this Attachment. AT&T shall have no liability for, nor responsibility to pay, such charges imposed by NuVox's AT&T Certified Supplier. Upon request, AT&T shall construct the enclosure for NuVox.

3.2.1 AT&T may elect to review NuVox's plans and specifications prior to allowing construction to start, to ensure compliance with AT&T's Specifications. AT&T will notify NuVox of its desire to execute this review in AT&T's response to the Initial Application, if NuVox has indicated its desire to construct its own enclosure. If NuVox's Initial Application does not indicate its desire to construct its own enclosure, but its subsequent firm order does indicate its desire to construct its own enclosure, then notification to review will be given within ten (10) calendar days after the Firm Order date. AT&T shall complete its review within fifteen (15) calendar days after the receipt of NuVox's plans and specifications. Regardless of whether or not AT&T elects to review NuVox's plans and specifications, AT&T reserves the right to inspect the enclosure after construction has been completed to ensure that it is constructed according to NuVox's submitted plans and specifications and/or AT&T's Specifications, as applicable. If AT&T decides to inspect the constructed Collocation Space, AT&T will complete its inspection within fifteen (15) calendar days after receipt of written notification of completion of the enclosure from NuVox. AT&T may require NuVox to remove or correct within seven (7) calendar days, at NuVox's expense, any structure that materially deviates from NuVox's plans and specifications or AT&T's Specifications, if applicable**.** If NuVox requests AT&T to construct the enclosure or do any other work, NuVox reserves the right to inspect the enclosure or work performed by AT&T and review any plans or specifications related to the same.

3.3 Shared Caged Collocation. NuVox may allow other telecommunications carriers to share NuVox's caged collocation arrangement, where technically feasible as that term has been defined by the FCC, pursuant to the terms and conditions agreed to by NuVox (Host) and the other telecommunications carriers (Guests) pursuant to this Section, except where the Premises is located within a leased space and AT&T is prohibited by said lease from offering such an option to NuVox or is located on property for which AT&T holds an easement and such easement does not permit such an option for a Remote Site Location. AT&T shall be notified in writing by NuVox upon the execution of any agreement between the Host and its Guest(s) prior to the submission of any application. Further, such notification shall include the name of the Guest(s), the term of the agreement, and a certification by NuVox that said agreement imposes upon the Guest(s) the same terms and conditions for Collocation Space as set forth in this Attachment between AT&T and NuVox.

3.3.1 NuVox, as the Host, shall be the sole interface and responsible Party to AT&T for the assessment and billing of rates and charges contained within this Attachment and for the purposes of ensuring that the safety and security requirements of this Attachment are fully complied with by the Guest(s), its employees and agents. AT&T shall provide NuVox with a proration of the costs of the Collocation Space based on the number of collocators and the space used by each. AT&T will not allocate less than one (1) rack/bay per Host/Guest. In those instances where the Host permits a Guest to use a shelf within the Host's bay within a Remote Site Location, AT&T will not prorate the cost of the bay. In all other states than Florida, and in addition to the above, NuVox shall be the responsible party to AT&T for the purpose of submitting applications for initial and additional equipment placement for the Guest(s). In

Florida, the Guest(s) may submit its own initial and additional equipment placement applications using the Host's Access Carrier Name Abbreviation (ACNA), provided that Guest secures permission from NuVox to use NuVox's ACNA and password. A separate Guest application shall result in the assessment of a Remote Site Application Fee, an Initial Application Fee or a Subsequent Application Fee, as set forth in the Pricing Schedule, which will be billed to the Host on the date that AT&T provides its written response to the Guest(s) Bona Fide Application (Application Response).

3.3.2 Notwithstanding the foregoing, the Guest(s) may submit service orders directly to AT&T to request the provisioning of interconnecting facilities between AT&T and the Guest(s), the provisioning of services, and access to unbundled network elements. The bill for these interconnecting facilities, services and access to UNEs will be charged to the Guest(s) pursuant to the applicable Tariff or the Guest's Interconnection Agreement with AT&T.

3.3.3 NuVox shall indemnify and hold harmless AT&T from any and all claims, actions, causes of action, of whatever kind or nature arising out of the presence of NuVox's Guest(s) in the Collocation Space, except to the extent caused by AT&T's, its employees' or agents' negligence, gross negligence, or willful misconduct.

3.3.4 In making shared caged arrangements available, whether or not NuVox serves as Host, AT&T may not increase the cost of site preparation or nonrecurring charges above the cost of provisioning such a shared arrangement of similar dimensions and material to a single collocating party.

3.4 Shared Remote Site Cageless Collocation. Subject to the requirements set forth in Section 3.3 above, to the extent AT&T is permitted to offer shared collocation at Remote Site locations by property or easement owners, AT&T will permit shared cageless collocation at such locations, where technically feasible, and space is available.

3.5 Adjacent Collocation. Subject to technical feasibility and space availability, AT&T will permit an adjacent collocation arrangement (Adjacent Arrangement) on Premises' property only when space within the Premises is legitimately exhausted and where the Adjacent Arrangement does not interfere with access to existing or planned structures or facilities on the Premises' property. An Adjacent Arrangement shall be constructed or procured by NuVox and must be in conformance with reasonable and nondiscriminatory provisions of AT&T's design and construction Specifications. Further, NuVox shall construct, procure, maintain and operate said Adjacent Arrangement(s) pursuant to all of the applicable rates, terms and conditions set forth in this Attachment. Additional rates, where applicable, shall be negotiated at the time of the application for the Remote Site Adjacent Arrangement.

3.5.1 If NuVox requests Adjacent Collocation, pursuant to the conditions stated in Section 3.5 above, NuVox must arrange with an AT&T Certified Supplier to construct the Adjacent Arrangement structure in accordance with AT&T's Specifications. AT&T

will provide Specifications upon request. Where local building codes require enclosure specifications more stringent than AT&T's Specifications, NuVox and NuVox's AT&T Certified Supplier must comply with the more stringent local building code requirements. NuVox's AT&T Certified Supplier shall be responsible for filing and receiving any and all necessary zoning, permits and/or licenses for such construction. NuVox's AT&T Certified Supplier shall bill NuVox directly for all work performed for NuVox pursuant to this Attachment. AT&T shall have no liability for, nor responsibility to pay, such charges imposed by NuVox's AT&T Certified Supplier.

3.5.2 NuVox must submit its Adjacent Arrangement construction plans and specifications to AT&T when it places its Firm Order. AT&T shall review NuVox's plans and specifications prior to construction of an Adjacent Arrangement(s) to ensure NuVox's compliance with AT&T's Specifications. AT&T shall complete its review within fifteen (15) calendar days after receipt of the plans and specifications from NuVox for the Adjacent Arrangement. AT&T may inspect the Adjacent Arrangement during and after construction is completed to ensure that it is constructed according to NuVox's submitted plans and specifications. If AT&T decides to inspect the completed Adjacent Arrangement, AT&T will complete its inspection within fifteen (15) calendar days after receipt of written notification of completion of the enclosure from NuVox. AT&T may require NuVox to remove or correct within seven (7) calendar days at NuVox's expense, any structure that materially deviates from its submitted plans and specifications or AT&T's Specifications, if applicable.

3.5.3 NuVox shall provide a concrete pad, the structure housing the arrangement, heating/ventilation/air conditioning (HVAC), lighting, and all of the facilities that are required to connect the structure (i.e., racking, conduits, etc.) to the AT&T point of demarcation. At NuVox's option, and where the local authority having jurisdiction permits, AT&T shall provide an AC power source and access to physical collocation services and facilities, subject to the same nondiscriminatory requirements as those applicable to any other physical collocation arrangement. In Alabama and Louisiana, AT&T will provide DC power, to Adjacent Collocation sites where technically feasible, as that term has been defined by the FCC subject to individual case basis pricing that complies with the pricing standards of Sections 251 and 252 of the Act. NuVox's AT&T Certified Supplier shall be responsible, at NuVox's sole expense, for filing and receiving any and all necessary zoning, permits and/or licenses for an Adjacent Arrangement. AT&T shall allow shared use of the Adjacent Arrangement pursuant to the terms and conditions set forth in Section 3.4 above.

3.5.4 In the event that interior space in an AT&T Premises becomes available, and subject to the provisions of Section 6.6 of this Attachment, NuVox may, at its option, relocate its equipment from an adjacent facility into the interior space subject to the rates, terms and conditions of this Attachment 4.

3.6 Other Physical Collocation Arrangements. AT&T will provide other collocation arrangements that have been demonstrated to be technically feasible. A previously

successful method of obtaining interconnection or access to unbundled network elements at a particular premises or point on any incumbent LEC's network is substantial evidence that such method is technically feasible in the case of substantially similar network premises or points. In seeking a particular collocation arrangement, either physical or virtual, NuVox, is entitled to a presumption that such arrangement is technically feasible if any LEC has deployed such collocation arrangement in any incumbent LEC premises.

3.7 Virtual Collocation. Virtual Collocation will be made available according to the terms and conditions described in AT&T's FCC Tariff No. 1 for all states except Florida, which will be made available pursuant to the terms and conditions contained in the Florida Access Tariff. AT&T shall provide Virtual Collocation at the rates set forth in the Pricing Schedule. If there are any inconsistencies between AT&T's FCC Tariff No. 1 or the Florida Access Tariff, and this Agreement, the rates, terms, and conditions of this Agreement shall control.

3.7.1 Virtual Collocation would occur when NuVox provides and leases to AT&T its transmission and other collocation equipment dedicated to NuVox's use. NuVox will be responsible for monitoring and controlling NuVox's circuits terminating at AT&T's Premises. Once space preparation is complete, and upon NuVox's request, NuVox shall contract with an AT&T Certified Supplier to install all equipment and facilities in accordance with AT&T's guidelines and Specifications. NuVox shall be responsible for all costs of the AT&T Certified Supplier's installation of NuVox's virtual collocation arrangement. NuVox shall be responsible for all engineering associated with the installation and the provision of the equipment, necessary supplies and related documentation related to provisioning NuVox's virtual collocation space. AT&T will maintain and repair such equipment under the same intervals and with the same or better failure rates for performance of similar functions for comparable AT&T equipment. Maintenance may include the change out of electronic cards provided by NuVox.

3.7.2 NuVox may purchase the equipment from a third party, and is not required to purchase the equipment from AT&T.

3.7.3 AT&T will make available digital, analog and fiber cross connects for Virtual Collocation at the rates contained in the Pricing Schedule.

3.8 Remote Site Collocation. Remote Site Collocation is the placement of NuVox owned facilities and equipment in AT&T remote sites. Equipment ownership, maintenance and insurance are the responsibility of the NuVox or their approved agent. The minimum amount of a Remote Site Collocation arrangement is one bay/rack.

3.8.1 For equipment requiring special technical considerations, NuVox must provide the equipment layout, including spatial dimensions for such equipment pursuant to the generic requirements contained in Telcordia GR-63-Core, and shall be responsible for

compliance with all special technical requirements associated with such equipment pursuant to Sections 3.8.2 and 3.8.3 following.

3.8.2 NuVox may elect to connect to a feeder line by submitting a service inquiry for that UNE to the Complex Resale Support Group, as follows:

3.8.2.1 connection to an AT&T feeder line (when technically feasible) is achieved via cross connects located near the AT&T equipment inside the Remote Site Location. In this case, the point of demarcation is the DSX, feeder distribution interface, or LGX panel in the Remote Site Location.

3.8.2.2 connection of the NuVox owned or leased entrance facilities into the Remote Site Collocation Space from NuVox's own point of presence is permitted. However, AT&T will designate the point of entrance at the Remote Site location housing the collocation space, so that it is physically accessible to both Parties.

3.8.3 Distribution lines will be accessed through NuVox's provision of a copper cable through a conduit from the Remote Site collocation space to the feeder distribution interface of sufficient length for splicing. AT&T will splice this cable to the distribution cable at the feeder distribution interface in 8-pair increments.

3.8.4 Virtual Collocation in the Remote Site. Virtual Collocation provides for the placement of NuVox owned equipment and facilities in an AT&T Remote Site. The minimum amount of space offered for a virtual collocation arrangement is one rack/bay. AT&T will lease NuVox's entrance fiber or cable (to include copper) cabling and equipment for the nominal fee of one dollar. NuVox's certified supplier will install the equipment in the rack/bay. AT&T will then be responsible for performing all installation, maintenance and repair of the Virtual in the Remote Site plug-ins, when NuVox requests such work via a Service Order or Maintenance ticket.

3.9 Cross Connect. A cross connect purchased pursuant to this Attachment shall connect the demarcation point associated with NuVox's collocation arrangement to the UNEs purchased by NuVox pursuant to Attachment 2 hereof or the interconnection facilities purchased by NuVox pursuant to Attachment 3 hereof.

3.10 Co-Carrier Cross Connect (CCXC). CCXCs are cross connects between NuVox and another collocated telecommunications carrier other than AT&T in the same Premises. Where technically feasible, AT&T will permit NuVox to interconnect directly between its virtual or physical collocation arrangements and those of another collocated telecommunications carrier within the same Premises via CCXCs and the associated cabling necessary to complete the interconnection consistent with FCC Rule 51.323. Both NuVox's agreement and the other collocated telecommunications carrier's agreement must contain rates, terms and conditions for CCXCs. AT&T applicable charges will be imposed on the requesting telecommunications carrier. NuVox is prohibited from using the Collocation Space for the sole or primary purpose of cross connecting to other collocated telecommunications carriers.

3.10.1 NuVox may provision the CCXC using its own technicians**,** if certified as an AT&T Certified Supplier, or contract with an AT&T Certified Supplier to place the CCXC. The CCXC shall be provisioned through facilities owned or leased by NuVox. Such connections to other collocated telecommunications carriers may be made using either optical or electrical facilities (lit or dark). In cases where NuVox's equipment and the equipment of the other collocated telecommunications carrier are located in contiguous caged Collocation Spaces, NuVox may use its own technicians to install CCXCs using either electrical or optical facilities (and associated patch cords, jumper cables, tie-pairs, etc.) between the equipment of both collocated telecommunication carriers and construct a dedicated cable support structure, if needed, between the two (2) contiguous cages. NuVox shall deploy such optical or electrical connections directly between its own facilities and the facilities of another collocated telecommunications carrier without being routed through AT&T's equipment. NuVox shall not provision CCXC on any AT&T distribution frame, POT (Point of Termination) Bay, DSX (Digital System Cross Connect), or LGX (Light Guide Cross Connect). NuVox is responsible for ensuring the integrity of the signal.

3.10.2 The CCXC fees provided for in this Agreement shall not apply when AT&T has installed fiber or copper/coax cable support structure, pursuant to the terms and conditions of previous interconnection agreements between the Parties, that has been paid in full by NuVox via nonrecurring CCXC charges. If NuVox has ordered a service that originates from its collocation space and terminates to another collocator's space in the same AT&T Premises, which caused an AT&T technician to jumper the two (2) collocation spaces together using NuVox specific connecting facility assignments (CFAs) provided by NuVox and the other collocator at an AT&T frame, panel or existing POT bay (wherever the point of demarcation resides), then AT&T will permit these cross connections to remain in-service as provisioned and at the rates at which they were provisioned ("grandfathered").

3.10.3 NuVox shall be responsible for providing a letter of authorization (LOA), with the application, to AT&T from the other collocated telecommunications carrier to which it will be cross-connecting NuVox provisioned CCXC shall utilize common cable support structure. There will be a recurring charge per linear foot, per cable, of common cable support structure used. In the case of two (2) contiguous caged collocation arrangements, NuVox may use its own technicians to construct the dedicated support structure between the two (2) collocation arrangements.

3.10.4 To request or self-provision CCXCs, NuVox must submit a Remote Site Application, an Initial Application or Subsequent Application to AT&T. If no modification to the Collocation Space is requested other than the placement of CCXCs, the Co-Carrier Cross Connect/Direct Connect Only Application Fee for CCXCs, as set forth in the Pricing Schedule, will apply. If modifications, in addition to the placement of CCXCs, are requested, the Initial Application or Subsequent Application Fee will apply as appropriate. AT&T will bill this nonrecurring fee on the date that it provides an Application Response to NuVox**.** If the CCXC is requested as part of an Initial

Application, only the Initial Application Fee shall apply, plus any other applicable charges.

3.10.5 If requested by NuVox, AT&T will provision additional cable racking, if insufficient capacity is available to support NuVox's request to provision a CCXC itself.

3.11 Direct Connect (DC). AT&T will permit NuVox to interconnect directly between NuVox's virtual and/or physical collocation arrangements within the same Premises by utilizing a DC. NuVox must use an AT&T Certified Supplier to place the DC. The DC shall be provisioned through facilities owned by NuVox. In those cases where NuVox's virtual and/or physical collocation space is contiguous in the central office, NuVox will have the option of using NuVox's own technicians to deploy DC's using either electrical or optical facilities between the collocation spaces and constructing its own dedicated cable support structure. NuVox will deploy such optical or electrical connections directly between its own facilities without being routed through AT&T equipment. NuVox may not self-provision DC's on any AT&T distribution frame, POT, DSX (Digital System Cross-connect) or LGX (Light Guide Cross-connect).

3.11.1 NuVox is responsible for ensuring the integrity of the signal. NuVox-provisioned DC's shall utilize common cable support structure. There will be a recurring charge per linear foot, and a nonrecurring charge per cable, of the actual common cable support structure used. In the case of two (2) contiguous collocation arrangements, NuVox will have the option of using NuVox's own technicians to construct its own dedicated support structure.

3.11.2 To request or self-provision DCs, NuVox must submit an Initial Application or Subsequent Application. If no modification to the Collocation Space is requested other than the placement of DC's, the Co-Carrier Cross Connect/Direct Connect Only Application Fee for DC, as defined in the Pricing Schedule, will apply. If modifications in addition to the placement of DC's are requested, the Initial Application or Subsequent Application Fee will apply. This nonrecurring fee will be billed by AT&T on the date that AT&T provides an Application Response.

4. Occupancy

4.1 Space Ready Date. AT&T will notify NuVox in writing when the Collocation Space is ready for occupancy ("Space Ready Date).

4.2 Acceptance Walkthrough. NuVox will schedule and complete an acceptance walkthrough of the Collocation Space with AT&T within fifteen (15) calendar days of the Space Ready Date. AT&T will correct any deviations from NuVox's original or jointly amended application requirements within seven (7) calendar days after the walkthrough, unless the Parties jointly agree upon a different time frame or mutually agree to accept the deviations. AT&T will notify NuVox of a new Space Ready Date upon resolution of any deviations that require correction. Another acceptance

walkthrough will then be scheduled and conducted within fifteen (15) calendar days of the new Space Ready Date. This follow-up acceptance walkthrough will be limited to only those items identified in the initial walkthrough. This process will continue until the Space Acceptance Date as defined below in Section 4.3 following. NuVox must notify AT&T in writing that collocation equipment installation is complete and operational with AT&T's network**.**

4.3 Space Acceptance Date. If NuVox completes its acceptance walkthrough within the fifteen (15) calendar day interval, the date of NuVox's acceptance of the Collocation Space, as indicated by NuVox's execution of a Space Acceptance Form, will be the Space Acceptance Date ("Space Acceptance Date").

4.3.1 In the event that NuVox fails to complete an acceptance walkthrough within this fifteen (15) calendar day interval, the Collocation Space shall be deemed accepted by NuVox on the Space Ready Date and the Space Acceptance Date will be established as the same date, provided that AT&T has complied with all space preparation, provisions of NuVox's BFFO, and that all required of AT&T is complete.

4.3.2 If NuVox decides to occupy the space prior to the Space Ready Date, the date NuVox occupies the space will be deemed the Space Acceptance Date.

4.4 Termination of Occupancy. In addition to any other provisions addressing termination of occupancy in this Agreement NuVox may terminate occupancy in a particular Collocation Space by submitting a Subsequent Application, or a Remote Site Application requesting termination of occupancy. Such termination shall be effective upon AT&T's execution of the Space Relinquishment Form for the collocation space(s) for which NuVox seeks to terminate occupancy, which termination date shall be the same date as NuVox's date of the Space Relinquishment Form, provided NuVox has complied with all provisions of the Space Relinquishment Form. AT&T may terminate NuVox's right to occupy the Collocation Space in the event NuVox fails to comply with any material provision directly related to Collocation in this Agreement provided AT&T gives NuVox thirty (30) calendar days' prior written notice of the failure to comply and gives NuVox an opportunity to cure during such period. Notwithstanding the above, any termination for non-payment of applicable fees, shall be in accordance with Attachment 7, Billing.

4.4.1 Upon termination of occupancy, NuVox, at its sole expense, shall remove its equipment and any other property from the Collocation Space. NuVox shall have thirty (30) calendar days (Removal Date) from the Subsequent Application BFFO Date to complete such removal, including the removal of all equipment and facilities of NuVox's Guest(s), unless NuVox's Guest(s) has assumed responsibility for the Collocation Space housing the Guest(s)'s equipment, pursuant to the Commissions' space exhaust requirements and executed the appropriate documentation required by AT&T prior to the NuVox Removal Date.

4.4.2 Should NuVox or NuVox's Guest(s) fail to vacate the Collocation Space by the Removal Date, AT&T shall have the right to remove the equipment and dispose of the equipment and other property of NuVox or NuVox's Guest(s), in any commercially reasonable manner that AT&T deems fit, at NuVox's expense and with no liability whatsoever for NuVox's property or NuVox's Guest(s)'s property**,** provided that AT&T has not granted NuVox's request for an extension of the Removal Date, and such request shall not unreasonably be denied.

4.4.3 Upon termination of NuVox's right to occupy specific Collocation Space, the Collocation Space will revert back to AT&T's space inventory, and NuVox shall surrender the Collocation Space to AT&T in the same condition as when it was first occupied by NuVox, with the exception of ordinary wear and tear, unless otherwise agreed to by the Parties. NuVox's AT&T Certified Supplier shall be responsible for updating and making any necessary changes to AT&T's records as required by AT&T's Specifications including, but not limited to, Central Office Record Drawings and ERMA Records. NuVox shall be responsible for the cost of removing any NuVox constructed enclosure, together with any supporting structures (e.g., racking, conduits or power cables), at the termination of occupancy and restoring grounds to their original condition

5. Use of Collocation Space

5.1 Equipment Type. AT&T shall permit the collocation and use of any equipment necessary for interconnection or access to unbundled network elements, in accordance with the applicable FCC and Commission rules and orders**.** Equipment is necessary for interconnection if an inability to deploy that equipment would, as practical, economic, or operational matter, preclude the requesting carrier from obtaining interconnection with AT&T at a level equal in quality to that which AT&T obtains within its own network or what AT&T provides to any Affiliate, subsidiary, or other party.

5.2 Equipment is necessary for access to an unbundled network element if an inability to deploy that equipment would, as a practical, economic, or operational matter, preclude the requesting carrier from obtaining nondiscriminatory access to that unbundled network element, including any of its features, functions, or capabilities.

5.3 Multi-functional equipment shall be deemed necessary for interconnection or access to an unbundled network element if and only if the primary purpose and function of the equipment, as the requesting carrier seeks to deploy it, meets either or both of the standards set forth above in Sections 5.1 and 5.2 above. For a piece of equipment to be utilized primarily to obtain equal in quality interconnection or nondiscriminatory access to one or more unbundled network elements, there also must be a logical nexus between the additional functions the equipment would perform and the telecommunication services NuVox seeks to provide to its customers by means of the interconnection or unbundled network element. The collocation of those functions of the equipment that, as stand-alone functions, do not meet either of the standards set

forth above in Sections 5.1 and 5.2 above must not cause the equipment to significantly increase the burden on AT&T's property. Such equipment necessary for interconnection or access to unbundled network elements shall include, but is not limited to transmission equipment, equipment to light dark fiber, optical terminating equipment and multiplexers, digital subscriber line access multiplexers, routers, asynchronous transfer mode multiplexers, multifunction equipment, remote switching modules, fiber distribution frames, splitters, concentrators, cross connect systems, switching equipment other than traditional circuit switches, and ancillary equipment that enables a requesting carrier to assure proper provisioning and functioning of other collocated equipment. Subject to the provisions of this Section, NuVox may order AT&T tariffed services that connect to such equipment in its Collocation Space.

5.3.1 Examples of equipment that would not be considered necessary include, but are not limited to: traditional circuit switching equipment, equipment used exclusively for call related databases, computer servers used exclusively for providing information services, operations support system (OSS) equipment used to support collocated telecommunications carrier network operations, equipment that generates customer orders, manages trouble tickets or inventory, or stores customer records in centralized databases, etc. AT&T will determine upon receipt of an application if the requested equipment is necessary based on the criteria established by the FCC. Multifunctional equipment placed on Premises must not place any greater relative burden on AT&T's property than comparable single function equipment. AT&T may object to the collocation of equipment based on criteria and in accordance with procedures and limitations established by applicable FCC and Commission rules and orders. With the exception of the equipment set forth in this Section 5.3.1, AT&T may not block collocation and use of equipment while a proceeding to determine whether AT&T may block such placement is pending. If AT&T prevails in such a proceeding, NuVox will remove such equipment from the collocation, within thirty (30) days of receipt of a written request to do so from AT&T, or as otherwise set forth in the relevant Commission order.

5.4 Whenever AT&T objects to collocation of equipment by NuVox for purposes within the scope of Section 251 (c) (6) of the Act, AT&T shall prove to the state commission that the equipment is not necessary for interconnection or access to unbundled network elements under the standards set forth above in this Section. AT&T may not object to the collocation of equipment on the grounds that the equipment does not comply with safety or engineering standards that are more stringent than the safety or engineering standards that AT&T applies to its own equipment. AT&T may not object to the collocation of equipment on the ground that the equipment fails to comply with Network Equipment and Building Specifications performance standards or any other performance standards. Collocated equipment must comply with the following Telcordia Network Equipment Building Systems (NEBS) General Equipment Requirements: Criteria Level 1 requirements as outlined in Telcordia Special Report SR-3580, Issue 1. If AT&T denies collocation of NuVox's equipment, citing safety standards, AT&T must provide to NuVox within five (5) business days

of the denial a list of all equipment that AT&T locates at the Premises in question, together with an affidavit attesting that all of the equipment meets or exceeds the safety standard that AT&T contends the competitor's equipment fails to meet. This affidavit must set forth in detail: the exact safety requirement that NuVox's equipment does not satisfy; AT&T's basis for concluding that NuVox's equipment does not meet this safety requirement; and AT&T's basis for concluding why collocation of equipment not meeting this safety requirement would compromise network safety. AT&T reserves the right to permit on a nondiscriminatory basis collocation of equipment that does not necessarily comport with the requirements of applicable FCC and Commission rules and orders.

5.5 All NuVox Remote Site equipment installation shall comply with AT&T TR 73503-11h, "Grounding – Engineering Procedures". Metallic cable sheaths and metallic strength members of optical fiber cables as well as the metallic cable sheaths of all copper conductor cables shall be bonded to the designated grounding bus for the Remote Site Location. All copper conducted pairs, working and non-working, shall be equipped with a solid-state protector unit (over-voltage protection only), which has been listed by a nationally recognized testing laboratory and located within NuVox's Remote Site Collocation Space.

5.6 Terminations. NuVox shall not request more DS0, DS1, DS3 and optical terminations for a collocation arrangement than the total port or termination capacity of the equipment (including, but not limited to, transmission equipment, multiplexers, DSLAMS, DLCs, signal regenerators, cross connect panels) physically installed in the arrangement. The total capacity of the equipment collocated in the arrangement will include equipment contained in the application in question as well as the transmission equipment already placed in an arrangement. If full network termination capacity of the equipment being installed is not requested in the application, additional network terminations for the installed equipment will require the submission of another application. In the event that NuVox submits an application for terminations that exceed the total capacity of the collocated equipment, NuVox will be informed of the discrepancy and will be required to submit a revision to the application. Billing for terminations begin when services are ordered to those terminations via an ASR or a LSR.

5.7 NuVox will provide a list of those entities with a security interest in collocation equipment in NuVox's collocation sites to AT&T. This list will be updated by NuVox once annually. This information shall be expressly covered by the confidentiality provisions contained in Section 12 of the General Terms and Conditions of this Agreement. In no event shall AT&T use the list of entities for any purpose other than contacting equipment owners or lien holders subsequent to abandonment of such equipment by NuVox.

5.8 No Marketing. NuVox shall not use the Collocation Space for marketing purposes, nor shall it place any marketing materials outside the Collocation Space or on the grounds of the Premises.

5.9 Collocation Space/Equipment Identification. NuVox shall place a plaque on or affix other identification (e.g., stenciling) to NuVox's equipment, in order for AT&T to identify NuVox's equipment, including a list of emergency contacts with telephone numbers. For caged collocation the identification may be placed on a plaque affixed outside of the caged enclosure. All equipment must be identified for cageless collocation.

5.10 Entrance Facilities. NuVox may elect to place NuVox-owned or NuVox-leased (from AT&T or a third party provider) fiber entrance facilities into its Collocation Space. AT&T will designate the point of interconnection as close as reasonably possible to the Premises building housing the Collocation Space, such as at an entrance manhole or a cable vault, which are physically accessible by both Parties. NuVox will provide and place fiber cable at the point of entrance (in the entrance manhole) of sufficient length to be pulled through conduit and into the splice location. NuVox will provide and place copper or fiber cable through conduit from the Remote Site Collocation Space to the feeder distribution interface to the splice location of sufficient length for splicing by AT&T. In Central Offices, NuVox will provide and install a sufficient length of fire retardant riser cable, to which the entrance cable will be spliced by AT&T. The fire retardant riser cable will extend from the splice location to NuVox's equipment in the Collocation Space. In the event NuVox utilizes a non-metallic, riser-type entrance facility, a splice will not be required. NuVox must contact AT&T for instructions prior to placing any entrance facility cable in the manhole. NuVox is responsible for maintenance of the entrance facilities.

5.10.1 Central Office - Microwave Entrance Facilities. At NuVox's option, AT&T will accommodate, where technically feasible, a microwave entrance facility, pursuant to separately negotiated terms and conditions.

5.10.2 Central Office -Copper and Coaxial Cable Entrance Facilities. AT&T shall permit NuVox to use copper or coaxial cable entrance facilities, if approved by the Commission. Notwithstanding the foregoing, in the case of adjacent collocation, copper facilities may be used between the adjacent collocation arrangement and the central office demarcation point unless AT&T determines that limited space is available for the placement of entrance facilities.

5.11 Dual Entrance Facilities. AT&T will provide at least two (2) interconnection points at each Premise where at least two such interconnection points are available and capacity exists. Upon receipt of a request by NuVox for dual entrance facilities to its physical Collocation Space, AT&T shall provide NuVox with information regarding AT&T's capacity to accommodate the requested dual entrance facilities. If conduit in the serving manhole(s) is available and is not reserved for another purpose or for utilization within twelve (12) months of the receipt of an application for collocation, AT&T will make the requested conduit space available for installing a second entrance facility to NuVox's arrangement. The location of the serving manhole(s)

will be as close as reasonably possible to the Premises housing the Collocation Space, but determined by AT&T on a reasonable and nondiscriminatory basis. Where dual entrance facilities are not available due to lack of capacity, AT&T will provide this information to NuVox in the Application Response**.** AT&T shall not deny an Application for the sole reason that dual entrance facilities are not available.

5.12 Shared Use. NuVox may utilize spare capacity on an existing interconnector's entrance facility for the purpose of providing an entrance facility to NuVox's collocation arrangement within the same Premises.

5.12.1 In a Central Office, AT&T shall allow the splice, as long as the fiber is non-working dark fiber. NuVox must arrange with AT&T in accordance with all reasonable and nondiscriminatory requirements set forth in AT&T's Special Construction Procedures, RL93-11-030BT, and provide a LOA from the other telecommunications carrier for AT&T to perform the splice of the NuVox provided riser cable to the spare capacity on the entrance facility. If NuVox desires to allow another telecommunications carrier to use its entrance facilities, that telecommunications carrier must arrange with AT&T in accordance with all reasonable and nondiscriminatory requirements set forth in AT&T's Special Construction Procedures, RL93-11-030BT, and provide a LOA from NuVox for AT&T to perform the splice of that telecommunications carrier's provided riser cable to the spare capacity on NuVox's entrance facility.

5.12.2 For a Remote Site, the Parties will negotiate the rates, terms and conditions based upon the technical feasibility and physical capacity at the time of a request from NuVox.

5.13 Central Office Demarcation Point. AT&T, in a reasonable and nondiscriminatory manner and in accordance with any and all applicable FCC and Commission rules and orders, will designate the point(s) of demarcation between NuVox's equipment and/or network and AT&T's network. Each Party will be responsible for the installation, maintenance and operation of all equipment/facilities on its side of the demarcation point and may make any terminations that may be required on their side of the demarcation point and may self-provision cross connects within the Collocation Space that may be required to activate service requests. NuVox shall have access to the demarcation point and all equipment and facilities on its side of the demarcation point**.** NuVox shall not have access to AT&T's side of the demarcation point. When troubles cannot be clearly isolated to AT&T's facilities and equipment, AT&T will agree to test cooperatively with NuVox to assist in trouble isolation to a specific Party's facilities and equipment as set forth in Section 2.3.13 of AT&T's FCC Tariff No. 1. If NuVox performs testing of its facilities and submits a trouble ticket to AT&T indicating a trouble exists on AT&T's side of the demarcation, then AT&T will perform the required testing on its side of the demarcation point to isolate the trouble reported by NuVox. If AT&T does find that a trouble exists on its side of the demarcation point after it has performed the required testing of its facilities, then AT&T will take the necessary action to repair its facilities to eliminate the trouble

and NuVox will not be charged for submission of the trouble ticket. If AT&T cannot locate any trouble on its side of the demarcation point, then AT&T will assess NuVox the applicable Maintenance of Services charge as set forth in Section 13.3.1 of AT&T's FCC Tariff No. 1, based on the amount of time, in half-hour increments, it takes an AT&T technician to complete the appropriate testing. If, within thirty (30) calendar days of AT&T's billing of the Maintenance of Services charge, NuVox performs its testing of the same facilities and finds that the trouble has not been eliminated and does not reside on NuVox's side of the demarcation point, then the NuVox shall submit a second trouble ticket to AT&T. If, after testing has been performed by AT&T, the trouble is actually determined to be on AT&T's side of the demarcation point, AT&T will not charge NuVox for the submission of the trouble ticket. AT&T shall also credit NuVox's account for the amount of the original Maintenance of Service charge on this same facility, within the next billing cycle. For 2-wire and 4-wire connections to AT&T's network, the demarcation point shall be a common block on the AT&T designated conventional distributing frame (CDF). NuVox shall be responsible for providing, and **NuVox**'s AT&T Certified Supplier shall be responsible for installing and properly labeling/stenciling, the common, and necessary cabling pursuant to Section 7 below. For DS1 and DS3 connections, the demarcation point shall be an AT&T provided DSX panel, or elsewhere if mutually agreed. For fiber connections, the demarcation point shall be an AT&T provided LGX panel, or elsewhere if mutually agreed. For DS0 connections, the demarcation point shall be an AT&T designated distributing frame. AT&T shall not require NuVox to use an intermediate interconnection arrangement in lieu of a direct connection to AT&T's network if technically feasible.

5.13.1 Existing point(s) of demarcation – NuVox provided POT Bay. AT&T will grandfather existing point(s) of demarcation established at a NuVox provided POT Bay. NuVox shall order services using the existing remaining terminations in the POT bay.

5.13.2 Existing point(s) of demarcation – AT&T provided POT Bay. AT&T will grandfather existing point(s) of demarcation established at an AT&T provided POT Bay. NuVox shall order services using the existing remaining cabling and terminations in the POT Bay.

5.13.3 Irrespective of where the demarcation point in a central office is located, AT&T shall provide NuVox with access to the NuVox's side of the demarcation point pursuant to this Section.

5.14 Remote Site Point of Demarcation. The point of demarcation will be as follows for each service level: DS-0 services will be the feeder distribution interface. DS-1 services will be at the designated AT&T DS-1 cross connect panel. DS-3 services will be at the designated AT&T DS-3 cross connect panel. Dark fiber services will be at the designated AT&T LGX panel.

5.15 NuVox's Equipment and Facilities. NuVox, or if required by this Attachment, NuVox's AT&T Certified Supplier, is solely responsible for the design, engineering, installation, testing, provisioning, performance, monitoring, maintenance and repair of the equipment and facilities used by NuVox and collocated in the Collocation Space or elsewhere in the Premises. Such equipment and facilities may include, but are not limited to, cable(s), equipment, and point of termination connections. NuVox need not use an AT&T Certified Supplier to monitor, maintain or repair its own equipment and facilities. NuVox need not use an AT&T Certified Supplier to monitor, maintain and repair its own equipment and facilities.

5.16 AT&T's Access to Enclosed Collocation Space. Except in the case of an emergency, AT&T will not access NuVox's locked enclosure prior to notifying NuVox at least seventy-two (72) hours or three (3) business days, whichever is greater, before access to the Collocation Space is required. AT&T retains the right to access NuVox's space for the purpose of making AT&T equipment or cabling and building modifications (e.g., altering or removing racking, ducts, electrical wiring, HVAC, and cabling). NuVox may elect to be present whenever AT&T performs work in the Collocation Space. The Parties agree that NuVox will not bear any of the expense associated with this type of work**.** AT&T, its employees, vendors and agents, will comply at all times with its own security and safety procedures and requirements, while in NuVox's space.

5.16.1 In cases of emergency, AT&T will provide oral notice of entry as soon as possible (such oral notice most likely will be after entry) and, upon request, will provide subsequent written notice containing the time of entry, cause for emergency, and a listing of personnel allowed to enter the space during said emergency.

5.17 NuVox must provide the local AT&T Central Office building contact with two Access Keys that will allow AT&T entry into enclosed and locked Collocation Space, including but not limited to, Adjacent Arrangements, pursuant to this Section. Access Keys may not be duplicated under any circumstances. AT&T agrees to be responsible for all Access Keys and for the return of all Access Keys after the contractual obligation with NuVox ends, upon the termination of this Attachment, or upon the termination of occupancy of an individual collocation arrangement.

5.18 AT&T shall be liable for the negligent actions of its employees or agents and for any damage caused to NuVox's equipment, facilities or Collocation Space while in NuVox's Collocation Space and shall indemnify and hold harmless NuVox from any claim, liability or damages that may result from such entry into NuVox's Collocation Space by AT&T, its agents, contractors or employees.

5.19 NuVox's Access. NuVox shall have access to its Collocation Space or Remote Site Collocation Space twenty-four (24) hours a day, seven (7) days a week. Such access will be unescorted, provided NuVox complies with the requirements set forth in Section 13 of this Attachment. NuVox agrees to provide the name and social security number, date of birth, or driver's license number of each employee, supplier, or agent

of NuVox or NuVox's Guests that will be provided with access keys or cards (Access Keys) prior to the issuance of said Access Keys, using form RF-2906-C, the "CLEC and CLEC Certified Supplier Access Request and Acknowledgement" form. When distributing access keys or cards, AT&T shall provide receipt acknowledgement forms, the "Collocation Acknowledgement Sheet" for access cards and the "Key Acknowledgement Form" for keys to NuVox. These receipt acknowledgement forms must be signed by NuVox and returned to AT&T Access Management within fifteen (15) calendar days of NuVox's receipt of keys or cards. Failure to return these properly acknowledged forms will result in the holding of subsequent access key or card requests until the proper acknowledgement documents have been received by AT&T. Access Keys may not be duplicated under any circumstances. NuVox agrees to be responsible for all Access Keys and for the return of all Access Keys in the possession of NuVox's employees, suppliers, Guests, or agents after termination of the employment relationship, the contractual obligation with NuVox ends, upon the termination of this Attachment, or upon the termination of occupancy of an individual collocation arrangement. The AT&T Access Customer Advocacy Center (ACAC) emergency access contact numbers will be provided to NuVox for access related issues.

5.19.1 AT&T will permit one accompanied site visit to NuVox's designated collocation arrangement location, after receipt of the BFFO without charge to NuVox. NuVox must submit to AT&T the completed Access Control Request Form for all employees or agents requiring access to the Premises within a minimum of thirty (30) calendar days prior to the date NuVox desires access to the Collocation Space or Remote Collocation Space. NuVox may submit a request for its one accompanied site visit to its designated collocation arrangement location at any time subsequent to AT&T's receipt of the BFFO**.** AT&T shall respond to such request within five (5) business days, and shall use best efforts to facilitate the visit on the date requested by NuVox. In the event NuVox desires access to the Collocation Space or Remote Collocation Space after submitting such a request, but prior to the approval of its access request, in addition to the first accompanied free visit, AT&T shall permit NuVox to access the Collocation Space or Remote Collocation Space, prior to completing AT&T's Training requirements (as set forth in Section 13 of this Attachment), accompanied by a security escort, at NuVox's expense. NuVox must request escorted access to its designated collocation arrangement location at least three (3) business days prior to the date such access is desired. A security escort will be required whenever NuVox or its approved agent desires access to the entrance manhole.

5.19.2 Lost or Stolen Access Keys. The Parties shall immediately notify each other in writing in the case of lost or stolen Access Keys. If it becomes necessary for AT&T to re-key buildings or enclosures or deactivate a card as a result of a lost Access Key(s) or for failure to return an Access Key(s), NuVox shall pay for the costs of re-keying or deactivating the card as set forth in the rates in the Pricing Schedule. If it becomes necessary for NuVox to rekey an enclosure due to AT&T losing a key or if a key becomes stolen while in the possession of AT&T, AT&T will pay NuVox the

applicable costs, as supported by documentation, to rekey an enclosure or replace lost or stolen keys that NuVox has previously provided to AT&T.

5.20 Health Related Facilities and Parking. NuVox authorized personnel will have reasonable access to health related facilities (e.g., bathrooms, eyewash stations, shower stations, drinking water, etc. within the Premises), as well as to available parking.

5.21 Interference or Impairment. For purposes of this Section, the term "significantly degrades" shall be defined as an action that noticeably impairs a service from a user's perspective.

5.21.1 Interference or Impairment. Notwithstanding any other provisions of this Attachment, NuVox shall not use any product or service provided under this Agreement, any other service related thereto or used in combination therewith, or place or use any equipment or facilities in any manner that 1) significantly degrades, or significantly impairs from the service provider's perspective, a traditional voice band service or advanced service provided by AT&T, or by any other entity whose service enters, is routed through or exits that Central Office; 2) endangers or damages the equipment, facilities or any other property of AT&T or of any other entity located in the central office or on the Premises in which the Central Office is located; 3) knowingly or unlawfully compromises the privacy of any communications routed through the Premises or 4) creates an unreasonable risk of injury or death to any individual or to the public. If AT&T reasonably determines that any equipment or facilities of NuVox violates the provisions of this paragraph, AT&T shall provide written notice to NuVox, which shall direct NuVox to cure the violation within forty-eight (48) hours of NuVox's actual receipt of written notice or, if such cure is not feasible, at a minimum, to commence curative measures within twenty-four (24) hours and to exercise reasonable diligence to complete such measures as soon as possible thereafter. After receipt of the notice, the Parties agree to consult immediately and, if necessary, to conduct an inspection of the arrangement. The Parties will act in good faith and in a cooperative manner to determine or isolate the source of significant degradation. Any dispute regarding the source of the risk, impairment, interference, or degradation may be resolved pursuant to the dispute resolution provisions set forth in the General Terms and Conditions of this Agreement.

5.21.2 Except in the case of the deployment of an advanced service which significantly degrades the performance of other advanced services or traditional voice band services, if NuVox fails to commence curative action within twenty-four (24) hours and exercise commercially reasonable efforts to complete such action as soon as possible or if the violation is of a character that poses an immediate and substantial threat of physical damage to property or injury or death to any person, then and only in that event, AT&T may take such action as it deems necessary to eliminate such threat, including, without limitation, the interruption of electrical power to NuVox's equipment which AT&T has determined beyond a reasonable doubt is the cause of such threat. In the case of NuVox not taking action within twenty-four (24) hours

and exercising commercially reasonable efforts to complete such action as soon as possible, AT&T will provide notice to NuVox prior to, or, if made impossible due to the nature of the threat imposed, as soon as possible after the taking of such action and provided that AT&T, its agents, contractors or employees conduct themselves in strict compliance with this Section and except to the extent that such action by AT&T fails to comport with the requirements of this paragraph or otherwise constitutes negligence, gross negligence or willful misconduct, AT&T shall have no liability to NuVox for any damages arising from such action. If AT&T's right to take action pursuant to this Section results solely from NuVox's failure to take curative action or to exercise commercially reasonable efforts to complete such action as soon as possible, AT&T shall provide notice prior to taking action under this Section. Any disputes with respect to AT&T's right to take such action under this Section 5.21.2 shall be resolved pursuant to the dispute resolution provisions set forth in the General Terms and Conditions of this Agreement.

5.21.3 In the case of the deployment of an advanced service which significantly degrades the performance of other advanced services or traditional voice band services and NuVox fails to take curative action within forty-eight (48) hours, then AT&T will establish before the Commission that the technology deployment is causing the significant degradation. Any claims of network harm presented to NuVox or, if subsequently necessary, the Commission must be supported by AT&T with specific and verifiable information. When AT&T demonstrates that a certain technology deployed by NuVox is significantly degrading the performance of other advanced services or traditional voice band services, NuVox shall discontinue deployment of that technology and migrate its customers to technologies that will not significantly degrade the performance of other such services. Where the only degraded service itself is a known disturber, and the newly deployed technology satisfies at least one of the criteria for a presumption that it is acceptable for deployment under applicable FCC and Commission rules and orders, the degraded service shall not prevail against the newly deployed technology.

5.22 Central Office Personalty and its Removal. Subject to requirements of this Attachment, NuVox may place or install in or on the Central Office Collocation Space such facilities and equipment, including storage for and spare equipment, as it deems desirable for the conduct of business, provided that such equipment is telecommunications equipment, or is desirable for the maintenance and operation of the collocated telecommunications equipment, and does not violate floor loading requirements, imposes or could impose or contains or could contain environmental conditions or hazards. Personal property, facilities and equipment placed by NuVox in the Collocation Space shall not become a part of the Collocation Space, even if nailed, screwed or otherwise fastened to the Collocation Space, but shall retain its status as personalty and may be removed by NuVox at any time. Any damage caused to the Collocation Space by NuVox's employees, suppliers, agents or representatives during the removal of such property shall be promptly repaired by NuVox's expense.

5.23 Alterations. Under no condition shall NuVox or any person acting on behalf of NuVox make any rearrangement, modification, augment, improvement, addition, and/or other alteration which could affect in any way space, power, HVAC, and/or safety considerations to the Collocation Space or the Premises, hereinafter referred to individually or collectively as "Alterations", without the express written consent of AT&T, which shall not be unreasonably withheld. The cost of any such Alteration shall be paid by NuVox. Any such Alteration shall require a Subsequent Application and will result in the assessment of a Remote Site Application Fee, a Subsequent Application Fee, an Administrative Only Application Fee or an Initial Application Fee as set forth in Section 6.2.1 below, and, which will be billed by AT&T on the date that AT&T provides NuVox with an Application Response.

5.24 Janitorial Service. NuVox shall be responsible for the general upkeep of its Collocation Space. NuVox shall arrange directly with an AT&T Certified Supplier for janitorial services applicable to Caged Collocation Space. AT&T shall provide a list of such suppliers on a site-specific basis, upon request.

6. Ordering and Preparation of Central Office and Remote Site Collocation Space

6.1 Initial Application. For NuVox or NuVox's Guest(s) initial equipment placement, NuVox shall submit to AT&T a Physical Expanded Interconnection Application Document (Initial Application). The Initial Application is considered Bona Fide when it is complete and accurate, meaning that all of the required fields on the application are completed with the appropriate type of information

6.1.1 Initial Application Fee. An Application Fee, as set forth in the Pricing Schedule, will apply to each Initial Application submitted by NuVox, and will be billed by AT&T on the date that AT&T provides NuVox with an Application Response.

6.2 Subsequent Application. In the event NuVox or NuVox's Guest(s) desires to modify the Collocation Space after a BFFO, NuVox shall complete an application that contains all of the detailed information associated with an Alteration to the Collocation Space, as defined in Section 5.23 of this Attachment ("Subsequent Application"). The Subsequent Application is considered Bona Fide when it is complete and accurate, meaning that all of the required fields on the Subsequent Application are completed with the appropriate type of information associated with the Alteration. AT&T shall determine what modifications, if any, to the Premises are necessary to accommodate the change requested by NuVox in the application. Such modifications to the Premises may include, but are not limited to: floor loading changes, changes necessary to meet HVAC requirements, changes to power plant requirements, equipment additions, etc.

6.2.1 Subsequent Application Fee. The application fee paid by NuVox for its request for an Alteration shall be dependent upon the level of assessment needed for the Alteration requested. Where the Subsequent Application does not require assessment for provisioning or construction work but requires administrative costs by AT&T, an

Administrative Only Application Fee will be required as set forth in the Pricing Schedule. This Administrative Only Application Fee will be applicable in instances such as Transfer of Ownership of the Collocation Space, Removal of Equipment from the Collocation Space, where the removal requires no physical work to be done by AT&T, modification to an application prior to BFFO and V-to-P Conversion (In Place). The fee for a Subsequent Application where the Alteration requested has limited effect (e.g., requires limited assessment but no capital expenditure by AT&T as sufficient cable support structure, HVAC, power and terminations are available) shall be the Subsequent Application Fee as set forth in the Pricing Schedule. If the modification requires capital expenditure, an Initial Application Fee shall apply. This nonrecurring fee will be billed on the date that AT&T provides NuVox with an Application Response.

6.3 Remote Site Application. When NuVox or NuVox's Guest(s) desires to install a bay/rack in a Remote Site Location, NuVox shall submit to AT&T a Physical Expanded Interconnection Application Document (Remote Site Application). The Remote Site Application is Bona Fide when it is completed and accurate, meaning that all required fields on the Remote Site Application are completed with the appropriate type of information. An application fee, as set forth in the Pricing Schedule, will apply which will be billed on the date that AT&T provides an Application Response. The placement of an additional bay/rack at a later date will be treated in the same fashion and a Remote Site Application will be required. The installation of additional shelves/ equipment, subject to the restrictions contained in Section 3.8 above, within an existing bay or rack does not require a Remote Site Application.

6.3.1 Availability of Space. Upon submission of an application, AT&T will permit NuVox to physically collocate in any available full bay/rack of space, pursuant to the terms of this Attachment, at any AT&T Remote Site Location, unless AT&T has determined that there is no full bay/rack of space available due to space limitations after AT&T has conducted a review of all space within the Remote Site Location or that collocation at the Remote Site Location is not practical for technical reasons. In the event space is not immediately available at a Remote Site Location, AT&T reserves the right to make additional space available, in which case the conditions in Section 7 below shall apply, or AT&T may elect to deny space in accordance with this Section in which case virtual or adjacent collocation options may be available. If the amount of space requested is not available, AT&T will notify NuVox of the amount that is available.

6.4 Space Preferences. If NuVox has previously requested and received a Space Availability Report for the Premises, NuVox may submit up to three (3) space preferences on its application by identifying the specific space identification numbers referenced on the Space Availability Report for the space it is requesting. In the event AT&T cannot accommodate the NuVox's preference(s), NuVox may accept the space allocated by AT&T or cancel its application, (without incurring an application fee), and submit another application requesting additional space preferences for the

same central office. This application will be treated as a new application and an application fee will be billed by AT&T on the date that AT&T provides NuVox with an Application Response.

6.5 Space Availability Notification

6.5.1 Unless otherwise specified, AT&T will respond to an application within ten (10) calendar days as to whether space is available or not available within a requested Premises. AT&T's electronic application system will indicate when the application is Bona Fide**.** If the application cannot be Bona Fide**,** AT&T will describe the items necessary to cause the application to become Bona Fide. If the amount of space requested is not available, AT&T will notify NuVox of the amount of space that is available and no application fee will apply. When AT&T's response includes an amount of space less than that requested by NuVox or space that is configured differently, no application fee will apply. If NuVox decides to accept the available space, NuVox must resubmit its application to reflect the actual space available, including the configuration of the space**.** When NuVox resubmits its application, AT&T will bill NuVox the appropriate application fee.

6.5.2 AT&T will respond to a Florida and Tennessee application within fifteen (15) calendar days as to whether space is available or not available within a Premises. AT&T's electronic application system will indicate when the application is Bona Fide. If the application cannot be Bona Fide**,** AT&T will describe the items necessary to cause the application to become Bona Fide. If the amount of space requested is not available, AT&T will notify NuVox of the amount of space that is available or space that may be configured differently and no application fee will apply. If NuVox decides to accept the available space, NuVox must amend its application to reflect the actual space available, including the configuration of the space, prior to submitting a BFFO.

6.5.3 Denial of Application. If AT&T notifies NuVox that no space is available ("Denial of Application"), AT&T will not assess an application fee to NuVox. After providing written notice to NuVox that AT&T has no available space in the requested Premises, AT&T will allow NuVox, upon request, to tour the entire Premises within ten (10) calendar days of such Denial of Application**,** or as otherwise agreed to by the Parties. In order to schedule this tour, the request for the tour of the Premises must be received by AT&T at least five (5) calendar days prior to the tour date.

6.5.4 AT&T's written notice of denial shall provide NuVox with information relevant to the denial of its request for collocation space, and give some detail as to why the space was denied.

6.5.5 Expedited Removal of Equipment in a Space Exhaust Scenario. AT&T shall remove obsolete unused equipment from its Premises prior to denying a request for collocation on the grounds of space limitations, unless AT&T proves to the Commission that collocation at the point is not technically feasible.

6.5.6 AT&T will provide virtual collocation in accordance with applicable FCC and Commission rules and orders.

6.5.7 Filing of Petition for Waiver. Upon Denial of Application, AT&T will timely file a petition with the Commission pursuant to 47 U.S.C. § 251(c)(6). AT&T shall provide to the Commission any information required or requested by that Commission. Such information shall include which space, if any AT&T or any of AT&T's affiliates have reserved for future use and a detailed description of the specific future uses for which the space has been reserved. Subject to an appropriate nondisclosure agreement or provision, AT&T shall permit NuVox to inspect any floor plans or diagrams that AT&T provides to the Commission**.**

6.6 Waiting List. On a first-come, first-served basis, governed by the date of receipt of an application or Letter of Intent, AT&T will maintain a waiting list of requesting carriers who have either received a Denial of Application or, where it is publicly known that the Premises is out of space, have submitted a Letter of Intent to collocate in that Premises. AT&T will notify the requesting carriers on the waiting list by mail when space becomes available, according to the position of each requesting carrier on said waiting list.

6.6.1 In Florida, on a first come, first served basis, governed by the date of the receipt of an application or Letter of Intent, AT&T will maintain a waiting list of requesting carriers who have either received a Denial of Application or, where it is publicly known that the Premises is out of space, have submitted a Letter of Intent to collocate in that Premises. Sixty (60) calendar days prior to space becoming available, if known, AT&T will notify the Commission and the telecommunications carriers on the waiting list by mail when space becomes available according to the position of each telecommunications carrier on said waiting list. If AT&T does not know sixty (60) calendar days in advance of when space will become available, AT&T will notify the Commission and the telecommunications carriers on the waiting list within two (2) business days of the determination that space is available. A telecommunications carrier that, upon denial of physical collocation, requests virtual collocation shall be automatically placed on the waiting list.

6.7 When space becomes available, NuVox must submit an updated, complete, and correct application to AT&T within thirty (30) calendar days of notification by AT&T that space will be available in the Premises previously out of space. If NuVox has originally requested caged Collocation Space and cageless Collocation Space becomes available, NuVox may refuse such space and notify AT&T in writing within the thirty (30) calendar day timeframe that NuVox wants to maintain its place on the waiting list, without accepting the available cageless Collocation Space. NuVox may accept an amount of space less than its originally requested space by submitting an application as set forth above, and upon request, may maintain its position on the waiting list for the remaining space that was initially requested. If NuVox does not submit an application or notify AT&T in writing as described above, AT&T will offer the space to the next telecommunications carrier on the waiting list and remove

NuVox from the waiting list. Upon request, AT&T will advise NuVox as to its position on the waiting list.

6.8 Public Notification. AT&T will maintain on its Interconnection Services website a notification document that will indicate all Premises that are without available space. AT&T shall update such document within ten (10) calendar days of the date that AT&T becomes aware that insufficient space is available to accommodate physical collocation. AT&T will also post a document on its Interconnection Services website that contains a general notice when space has become available in a Premises previously on the space exhaust list.

6.9 Application Response

6.9.1 In Alabama, Georgia, Kentucky, Louisiana, Mississippi, North Carolina, and South Carolina, when space has been determined to be available for caged or cageless arrangements, AT&T will provide an Application Response within twenty (20) calendar days of receipt of a Bona Fide application for physical collocation and ten (10) calendar days for virtual collocation. The Central Office Application Response will include sufficient information to enable NuVox to place a Firm Order**,** which, at a minimum**,** will consist of the configuration of the space, the Cable Installation Fee, Cable Records Fee, and any other applicable space preparation fees, as described in Section 8 below.

6.9.1.1 AT&T will provide the Remote Site Application Response in Alabama, Georgia, Kentucky, Mississippi, North Carolina, and South Carolina, when space has been determined to be available, within twenty (20) calendar days of receipt of a Bona Fide application. The Application Response will include, at a minimum, the configuration of the space, the Cable Installation Fee, Cable Records Fee, and the space preparation fees, as described in Section 8 below.

6.9.1.2 AT&T will provide the Remote Site Application Response in Louisiana, when space has been determined to be available, within thirty (30) calendar days for one (1) to ten (10) applications; thirty-five (35) calendar days for eleven (11) to twenty (20) applications; and for requests of more than twenty (20) applications, the Application Response interval will be increased by five (5) calendar days for every five (5) applications received within five (5) business days. The Application Response will include, at a minimum, the configuration of the space, the Cable Installation Fee, Cable Records Fee, and the space preparation fees, as described in Section 8 below.

6.9.2 In Florida and Tennessee, within fifteen (15) calendar days of receipt of a Bona Fide application, when space has been determined to be available or when a lesser amount of space than that requested is available, then with respect to the space available, AT&T will provide an Application Response including sufficient information to enable NuVox to place a Firm Order. The Central Office Application Response will include, at a minimum, the configuration of the space, the Cable Installation Fee, Cable Records Fee, and the space preparation fees, as described in Section 8 below. When NuVox submits ten (10) or more applications within ten (10) calendar days, the

initial fifteen (15) calendar day response interval will increase by ten (10) calendar days for every additional ten (10) applications or fraction thereof.

6.9.2.1 AT&T will provide the Remote Site Application Response in Florida, within fifteen (15) calendar days of receipt of a Bona Fide application, when space has been determined to be available or when a lesser amount of space than that requested is available, then with respect to the space available, AT&T will provide an Application Response including sufficient information to enable NuVox to place a Firm Order. The Application Response will include, at a minimum, the configuration of the space, the Cable Installation Fee, Cable Records Fee, and the space preparation fees, as described in Section 8 below. When NuVox submits ten (10) or more applications within ten (10) calendar days, the initial fifteen (15) calendar day response period will increase by ten (10) calendar days for every additional ten (10) applications or fraction thereof.

6.9.2.2 AT&T will provide the Remote Site Application Response in Tennessee, when space has been determined to be available, within twenty (20) calendar days of receipt of a Bona Fide application. The Application Response will include, at a minimum, the configuration of the space, the Cable Installation Fee, Cable Records Fee, and the space preparation fees, as described in Section 8 below.

6.10 Application Modifications

6.10.1 If a modification or revision is made to any information in the Bona Fide Application prior to a BFFO, with the exception of modifications to Customer Information, Contact Information or Billing Contact Information, at the request of NuVox, or necessitated by technical considerations agreed to by both Parties, the application shall be considered a new application and handled as a new application with respect to the response and provisioning intervals. AT&T will charge NuVox the appropriate application fee associated with the level of assessment performed by AT&T. If the modification requires no labor or capital expenditure by AT&T, but AT&T must perform an assessment of the application to evaluate whether or not AT&T would be required to perform necessary infrastructure or provisioning activities, then an Administrative Only Application Fee shall apply. The fee for an application modification where the modification requested has limited effect (e.g., requires labor expenditure but no capital expenditure by AT&T and where sufficient cable support structure, HVAC, power and terminations are available) shall be the Subsequent Application Fee as set forth in the Pricing Schedule. A modification involving a capital expenditure by AT&T shall require NuVox to submit the application with an Initial Application Fee. This nonrecurring fee will be billed by AT&T on the date that AT&T provides NuVox with an Application Response.

6.11 Bona Fide Firm Order

6.11.1 NuVox shall indicate its intent to proceed with its request for collocation space in an AT&T Premises by submitting a Bona Fide Firm Order to AT&T. The BFFO must be received by AT&T no later than thirty (30) calendar days after receipt of AT&T's

Application Response to NuVox's Bona Fide Application or NuVox's application will expire.

6.11.2 AT&T will establish a firm order date based upon the date AT&T is in receipt of NuVox's BFFO. AT&T will acknowledge the receipt of NuVox's BFFO within seven (7) calendar days of receipt, so that NuVox will have positive confirmation that its BFFO has been received. AT&T's response to a BFFO will include a Firm Order Confirmation, which contains the firm order date. No revisions can be made to a BFFO.

7. Construction and Provisioning

7.1 Construction and Provisioning Intervals

7.1.1 In Florida and Tennessee, AT&T will complete construction for physical and Remote Site collocation arrangements as soon as possible within a maximum of ninety (90) calendar days from receipt of a BFFO or as agreed to by the Parties. For Alterations requested to the Collocation Space after initial space completion, AT&T will complete construction for physical and remote site collocation arrangements as soon as possible within a maximum of forty-five (45) calendar days from receipt of a BFFO or as agreed to by the Parties if no additional space requested. If AT&T does not believe that construction for physical and remote site collocation will be completed within the relevant timeframe and AT&T and NuVox cannot agree upon a completion date, within forty-five (45) calendar days of receipt of the BFFO for an initial request, and within thirty (30) calendar days of receipt of the BFFO for an Alteration, AT&T may seek an extension from the Commission. For virtual collocation arrangements in Florida and Tennessee, AT&T will complete construction for initial and Alterations requested to the virtual Collocation Space after initial space completion as soon as possible within a maximum of sixty (60) calendar days.

7.1.2 In Alabama, Georgia, Kentucky, Louisiana, Mississippi, North Carolina, and South Carolina, AT&T will complete construction for caged collocation arrangements under ordinary conditions as soon as possible within a maximum of ninety (90) calendar days from receipt of a BFFO or as agreed to by the Parties. AT&T will complete construction for cageless and Remote Site collocation arrangements under ordinary conditions as soon as possible within a maximum of sixty (60) calendar days from receipt of a BFFO and ninety (90) calendar days from receipt of a BFFO for extraordinary conditions, or as agreed to by the Parties. AT&T will complete construction for virtual collocation arrangements under ordinary conditions as soon as possible within a maximum of fifty (50) calendar days under ordinary conditions from receipt of a BFFO and seventy five (75) calendar days from receipt of a BFFO for extraordinary conditions, or as agreed to by the Parties. Ordinary conditions are defined as space available with only minor changes to support systems required such

as, but not limited to, HVAC, cabling and the power plant. Extraordinary conditions shall include, but not be limited to, major AT&T equipment rearrangements or additions; power plant additions or upgrades; major mechanical additions or upgrades; a major upgrade for ADA compliance; environmental hazard or hazardous materials abatement; and arrangements for which equipment shipping intervals are extraordinary in length. The Parties may mutually agree to renegotiate an alternative provisioning interval or AT&T may seek a waiver from this interval from the Commission.

7.1.3 Records Only Change. When NuVox adds equipment within initial demand parameters that requires no additional space preparation work on the part of AT&T, then no additional charges or additional intervals will be imposed by AT&T.

7.1.4 Central Office Augments. In the states of Alabama, Georgia, Kentucky, Louisiana, Mississippi, North Carolina, and South Carolina, AT&T will provide the reduced intervals outlined below to NuVox, when NuVox requests a Central Office augment that is identified in Sections 7.1.4.1, 7.1.4.2, 7.1.4.3, 7.1.4.4 and 7.1.4.5 ("Augment") after the Space Ready Date for existing physical collocation space. The cost of any such Augment shall be paid by NuVox. Unless otherwise set forth in Section 7.1.4.10 below, any such Augment application will require a Subsequent Application.

7.1.4.1 Simple Augments will be completed within twenty (20) calendar days after receipt of the BFFO for an:

- Extension of Existing AC Circuit Capacity within Arrangement Where Sufficient Circuit Capacity is Available
- Fuse Change and/or Increase or Decrease -48V DC Power from Existing ILEC BDFB

7.1.4.2 Minor Augments will be completed within forty-five (45) calendar days after receipt of the BFFO for:

- 168 DS1s Terminations at the ILEC Demarcation Frame (Databasing Only; Panels, Relay Racks and Overhead Racking Exist)
- 96 DS3s Terminations at the ILEC Demarcation Frame (Databasing Only; Panels, Relay Racks and Overhead Racking Exist)
- 99 Fiber Terminations at the ILEC Demarcation Frame (Databasing Only; Panels, Relay Racks and Overhead Racking Exist)
- Maximum of 2000 Service Ready DS0 Terminations at the ILEC Demarcation Frame (Databasing Only; Panels, Relay Racks and Overhead Racking Exist)

7.1.4.3 Intermediate Augments will be completed within sixty (60) calendar days after receipt of the BFFO for:

- 168 DS1s (Databasing and Installation of Termination Panels, Relay Racks or Additional Structure as Required)

- 96 DS3s (Databasing and Installation of Termination Panels, Relay Racks or Additional Structure as Required)
- 99 Fiber Terminations (Databasing and Installation of Termination Panels, Relay Racks or Additional Structure as Required)
- 2000 DS0s (Databasing and Installation of Termination Panels, Relay Racks or Additional Structure as Required)
- Install Cable Racking or Other Support Structures as Required to Support Co-Carrier Cross Connects (Adequate Floor or Ceiling Structural Capacity Exists and Support/Protection Structure for Fiber Patch Cord is Excluded)

7.1.4.4 Major Augments –Physical Collocation will be completed within ninety (90) calendar days after BFFO and includes all requests for additional physical collocation space (caged or cageless).

7.1.4.5 Major Augments – Virtual Collocation will be completed within seventy-five (75) calendar days after BFFO and includes all requests for additional virtual collocation space

7.1.4.6 If NuVox submits an Augment application request that includes two Augment items from the same category in Sections 7.1.4.1, 7.1.4.2, and 7.1.4.3 above, the Augment interval associated with the next highest augment category will apply (e.g., if two items from the minor Augment category are requested on the same request, then an interval of sixty (60) calendar days from the receipt of the BFFO would apply, which is the interval associated with the intermediate category).

7.1.4.7 If NuVox submits an Augment application request that includes three Augment items from the same category in Sections 7.1.4.1, 7.1.4.2, and 7.1.4.3 above, the major Augment interval of ninety (90) calendar days from the receipt of the BFFO would apply (e.g., if three items from the simple augment category are requested on the same request for a physical collocation arrangement, then an interval of ninety (90) calendar days from the receipt of the BFFO would apply, which is the major physical augment interval; likewise if three items from the simple Augment category are requested on the same request for a virtual collocation arrangement, then an interval of seventy-five (75) calendar days from the receipt of the BFFO would apply, which is the major virtual Augment interval.

7.1.4.8 If NuVox submits an Augment application request that includes one Augment item from two separate categories in Sections 7.1.4.1, 7.1.4.2 and 7.1.4.3 above, the Augment interval associated with the higher augment category will apply (e.g., if an item from the minor augment category and an item from the intermediate Augment category are requested on the same request, then an interval of sixty (60) calendar days from the receipt of the BFFO would apply, which is the interval associated with the intermediate Augment category).

7.1.4.9 All Augments not expressly included in the Simple, Minor, Intermediate or Major categories as outlined above will be placed into the appropriate category as

negotiated by NuVox and AT&T. If NuVox and AT&T are unable to determine the appropriate category through negotiation, then the appropriate major augment category identified in Sections 7.1.4.4 and 7.1.4.5 above would apply based on whether the Augment request is for NuVox's physical or virtual collocation arrangement.

7.1.4.10 Individual application fees associated with simple, minor and intermediate Augment applications are contained in the Pricing Schedule. The appropriate application fee will be assessed to NuVox at the time AT&T provides NuVox with the Application Response. If NuVox requests multiple items from different Augment categories AT&T will bill NuVox the Augment Application Cost, as identified in the Pricing Schedule, associated with the higher Augment category only. NuVox will be assessed a Subsequent Application Fee for all Major Augment applications (Major Augments are defined above in Sections 7.1.4.4 and 7.1.4.5 above). The Subsequent Application Fee is also reflected in the Pricing Schedule.

7.2 Joint Planning. Unless otherwise agreed to by the Parties, a joint planning meeting or other method of joint planning between AT&T and NuVox will commence within a maximum of twenty (20) calendar days from AT&T's receipt of a BFFO. At such meeting, the Parties will agree to the preliminary design of the Collocation Space and the equipment configuration requirements as reflected in the Application and affirmed in the BFFO. NuVox Upon mutual agreement and within a mutually agreed upon time frame, the Parties will exchange any additional information requested (including, but not limited to cable type and cable termination specifications, naming convention and requirements, diagrams or drawings depicting the exact path of entrance facilities from the interconnection point to the Collocation Space, power cabling connectivity, feeder and fuse specifications and requirements, AT&T contacts and escalation procedures, and identification of demarcation points) at the Joint Planning Meeting.

7.3 Permits. Each Party or its agent(s) will diligently pursue filing for the permits required for the scope of work to be performed by that Party or its agent(s) within ten (10) calendar days of the completion of the finalized construction design and specifications.

7.4 Acceptance Walkthrough. NuVox will schedule and complete an acceptance walkthrough of each Collocation Space with AT&T within fifteen (15) calendar days of AT&T's notification to NuVox that the Collocation Space is ready for occupancy. In the event NuVox fails to complete an acceptance walkthrough within this fifteen (15) day interval, the Collocation Space shall be deemed accepted by NuVox provided that AT&T has complied with all space preparation, provisions of NuVox's BFFO, and that all required of AT&T is completed on the Space Ready Date**.** AT&T will correct any deviations to NuVox's original or jointly amended design and/or specification requirements within seven (7) calendar days after the walkthrough, unless the Parties jointly agree upon a different timeframe**.** At the end of the

acceptance walkthrough or after any deviations are corrected, NuVox will execute a Space Acceptance Form indicating its acceptance of the Collocation Space.

7.5 Central Office Circuit Facility Assignments (CFAs). AT&T will provide CFAs to NuVox as soon as possible and no later than thirty (30) calendar days after AT&T's receipt of a Bona Fide Firm Order, except as set forth in Section 7.5.1 following. The ACTL will be provided to NuVox no later than with the issuance of the CFA.

7.5.1 To provide CFAs to NuVox prior to the Provisioning Interval for those Premises in which NuVox has a physical collocation arrangement with a POT bay provided by NuVox or a virtual collocation arrangement, NuVox must provide AT&T with the following information:

7.5.1.1 for a physical collocation arrangement with a NuVox-provided POT bay - a complete layout of the POT panels (equipment inventory update (EIU) form) showing locations, speeds, etc.

7.5.1.2 for a virtual collocation arrangement - a complete layout of NuVox's equipment (equipment inventory update (EIU) form), including the locations of the low speed ports and the specific frame terminations to which the equipment will be wired by NuVox's AT&T Certified Supplier.

7.5.1.3 NuVox may submit an EIU form at any time after the twentieth (20$^{th)}$ calendar day after the BFFO. CFAs will be provided within ten (10) calendar days of receipt of the EIU form.

7.5.2 AT&T will bill NuVox a nonrecurring charge, as set forth in the Pricing Schedule, each time NuVox requests a resend of its CFAs for any reason other than an AT&T error in the CFAs initially provided to NuVox.

7.5.3 For a Remote Site CFAs are not used. Distribution lines will be accessed by NuVox provisioning a copper cable through a conduit from the Remote Site collocation space to the feeder distribution interface (FDI) of sufficient length for splicing. AT&T personnel will splice NuVox's cable to a group/bundle of the distribution cable at the FDI. Groups/Bundles will be provided in 8-pair increments. In order to establish the cable/pair range NuVox must submit a Remote Site Splitter Ordering Document (RSOD) which can be found in the Remote Site Line Splitting CLEC Information Package located on AT&T's web site at http://wholesale.att.com/reference_library/guides/html/unes.html. Once the cable/pair range is established NuVox can then submit LSRs for individual line activations.

7.6 Use of AT&T Certified Supplier. NuVox shall select a supplier which has been approved as an AT&T Certified Supplier to perform all construction, engineering as specified in TR 73503, installation and removal work. NuVox, if an AT&T Certified Supplier, or NuVox's AT&T Certified Supplier must follow and comply with all of the reasonable and nondiscriminatory requirements, outlined in AT&T TR 73503, TR 73519, TR 73572, and TR 73564. In some cases, NuVox must use a separate AT&T

Certified Supplier for those work activities associated with transmission equipment, switching equipment and power equipment, unless the AT&T Certified Supplier has met the requirements for all of the required work activities. AT&T shall provide NuVox with a list of AT&T Certified Suppliers, upon request. NuVox, if an AT&T Certified Supplier, or its AT&T Certified Supplier(s) shall be responsible for installing NuVox's equipment and associated components, extending power cabling to the AT&T power distribution frame, performing operational tests after installation is complete, and notifying AT&T's equipment engineers and NuVox upon successful completion of installation and all associated work.. In cases where an AT&T Certified Supplier is used, the AT&T Certified Supplier shall bill NuVox directly for all work performed for NuVox pursuant to this Attachment. AT&T shall have no liability for, nor responsibility to pay, such charges imposed by NuVox's AT&T Certified Supplier. AT&T shall make available its supplier certification program to NuVox or any supplier proposed by NuVox and will not unreasonably withhold certification.

7.7 Alarm and Monitoring. AT&T shall place environmental alarms in the Premises for the protection of AT&T equipment and facilities. NuVox shall be responsible for placement, monitoring and removal of environmental and equipment alarms used to service NuVox's Collocation Space. Upon request, AT&T will provide NuVox with an applicable tariffed service(s) to facilitate remote monitoring of collocated equipment by NuVox. Both Parties shall use best efforts to notify the other of any verified environmental condition (e.g., temperature extremes or excess humidity) known to that Party.

7.8 Virtual to Physical Collocation Relocation. NuVox may relocate its existing virtual collocation arrangement(s), according to the standard intervals identified in Sections 7.1.1 and 7.1.2 above, to a physical collocation arrangement(s) and pay the appropriate fees associated with physical collocation and the rearrangement or reconfiguration of services terminated in the virtual collocation arrangement, as set forth in the Pricing Schedule. In the event AT&T knows when additional space for physical collocation may become available at the location requested by NuVox, such information will be provided to NuVox in AT&T's written denial of physical collocation space. To the extent that (i) physical Collocation Space becomes available to NuVox within one hundred eighty (180) calendar days of AT&T's written denial of NuVox's request for physical collocation, (ii) AT&T had knowledge that the space was going to become available, and (iii) NuVox was not informed in the written denial that physical Collocation Space would become available within such one hundred eighty (180) calendar days, then NuVox may relocate its virtual collocation arrangement to a physical collocation arrangement and will receive a credit for any nonrecurring charges previously paid for such virtual collocation. NuVox must arrange with an AT&T Certified Supplier for the relocation of equipment from its virtual Collocation Space to its physical Collocation Space and will bear the cost of such relocation.

7.9 Virtual to Physical Conversion (In-Place). Virtual collocation arrangements may be converted to "in-place" physical arrangements if the potential conversion meets the following four criteria: 1) there is no change in the amount of equipment or the configuration of the equipment that was in the virtual collocation arrangement; 2) the conversion of the virtual collocation arrangement will not cause the equipment or the results of that conversion to be located in a space that AT&T has reserved for its own future needs; 3) the converted arrangement does not limit AT&T's ability to secure its own equipment and facilities due to the location of the virtual collocation arrangement; and 4) any changes to the arrangement can be accommodated by existing power, HVAC, and other requirements. AT&T will complete virtual to in-place physical collocation conversions within forty-five (45) calendar days from receipt of the BFFO. AT&T will bill NuVox an Administrative Only Application Fee as set forth in the Pricing Schedule on the date that AT&T provides an Application Response to NuVox.

7.10 Cancellation. If at any time prior to space acceptance, NuVox cancels its order for Collocation Space(s) (Cancellation), AT&T will bill the applicable nonrecurring rate(s) as set forth in the Pricing Schedule for any and all work processes for which work has begun or been completed.

7.11 Licenses. NuVox, at its own expense, will be solely responsible for obtaining from governmental authorities, and any other appropriate agency, entity, or person, all rights, privileges, and licenses necessary or required, if any, to operate as a provider of telecommunications services to the public or to build-out, equip and/or occupy the Collocation Space.

7.12 Environmental Compliance. The Parties agree to utilize and adhere to the Environmental Hazard Guidelines identified in Exhibit A attached hereto.

8. Rates and Charges

8.1 NuVox agrees to pay the rates and charges identified in the Pricing Schedule.

8.2 Application Fee. AT&T shall assess an application fee by generating a service order, which shall be issued at the time AT&T responds that space is available pursuant to Section 6.9 above. AT&T will bill this nonrecurring fee on the date that AT&T provides an Application Response to NuVox.

8.2.1 In Tennessee, the applicable application fee for caged physical collocation is the planning fee for both Initial Applications and Subsequent Applications placed by NuVox. AT&T will bill this nonrecurring fee on the date that AT&T provides an Application Response to NuVox.

8.3 Rack/Bay Space. The rack/bay space charge includes reasonable charges for air conditioning, ventilation and other allocated expenses associated with maintenance of the Remote Site Location, and includes amperage necessary to power NuVox's

equipment. NuVox shall pay rack/bay space charges based upon the number of racks/bays requested. AT&T will assign Remote Collocation Space in conventional remote site rack/bay lineups where technically feasible.

8.4 Recurring Charges. If NuVox has met the applicable fifteen (15th) calendar day walkthrough interval specified in Section 4.3 above, billing for recurring charges will begin upon the Space Acceptance Date. In the event that NuVox fails to complete an acceptance walkthrough within the applicable fifteen (15th) calendar day interval, billing for recurring charges will commence on the Space Ready Date. If NuVox occupies the space prior to the Space Ready Date, the date NuVox occupies the space is deemed the new Space Acceptance Date and billing for recurring charges will begin on that date.

8.5 NuVox shall continue the payment of all monthly fees to AT&T until the date that NuVox, and if applicable NuVox's Guest(s), has fully vacated the Collocation Space and the Space Relinquishment Form has been accepted by AT&T. Billing for monthly recurring charges will cease on the date that NuVox and AT&T conduct an inspection of the terminated space and jointly sign off on the Space Relinquishment Form or on the date that NuVox signs off on the Space Relinquishment Form and sends this form to AT&T, if a subsequent inspection of the terminated space by AT&T reveals no discrepancies. In the latter case, if subsequent inspection by AT&T within fifteen (15th) calendar days of its receipt of the Space Relinquishment Form**,** does reveal discrepancies, billing for monthly recurring charges will cease on the date that AT&T and NuVox jointly conduct an inspection, which confirms that NuVox has corrected all of the noted discrepancies. A Subsequent Application Fee will not apply for the termination of occupancy.

8.6 Space Preparation. Space preparation fees consist of a nonrecurring charge for firm order processing and monthly recurring charges for central office modifications assessed per arrangement, per square foot and common systems modifications assessed per arrangement, per square foot for cageless collocation and per cage for caged collocation. NuVox shall remit payment of the nonrecurring firm order processing fee coincident with submission of a BFFO. The charges recover the costs associated with preparing the Collocation Space, which includes survey, engineering of the Collocation Space, design and modification costs for network, building and support systems. In the event NuVox opts for cageless space, the space preparation fees will be assessed based on the total floor space dedicated to NuVox as prescribed in this Section. If NuVox was previously billed ICB or nonrecurring space preparation charges by AT&T, but has not paid such charges in full, AT&T will determine any outstanding amounts due from NuVox, and the Parties will agree on such outstanding amounts that are due and owing to AT&T. If NuVox pays such outstanding amounts to AT&T, no additional space preparation charges will be applicable or billed going forward for those collocation arrangements, for which space preparation charges have been paid in full through previously billed ICB or nonrecurring space preparation charges. However, any new requests for collocation space or augmentations requesting additional space for an existing collocation

arrangement will be billed pursuant to the current monthly recurring space preparation rates set forth in the Pricing Schedule.

8.7 Floor Space. Billing for floor space, if applicable, will begin on the Space Acceptance Date. The Floor Space Charge includes reasonable charges for lighting, HVAC, and other allocated expenses associated with maintenance of the Premises but does not include any expenses for power supplied to NuVox for its equipment**.** When the Collocation Space is enclosed, NuVox shall pay floor space charges based upon the number of square feet so enclosed. When the Collocation Space is not enclosed, NuVox shall pay floor space charges based upon the following floor space calculation: [(depth of the equipment lineup in which the rack is placed) + (0.5 x maintenance aisle depth) + (0.5 x wiring aisle depth)] X (width of rack and spacers). For purposes of this calculation, the depth of the equipment lineup shall consider the footprint of equipment racks plus any equipment overhang. AT&T will assign unenclosed Collocation Space in conventional equipment rack lineups where feasible. In the event NuVox's equipment requires special cable racking, isolated grounding or other treatment which prevents placement within conventional equipment rack lineups, NuVox shall be required to request an amount of floor space sufficient to accommodate the total equipment arrangement.

8.8 Cable Installation. Cable Installation Fee(s) are assessed per entrance cable placed. This nonrecurring fee will be billed by AT&T upon receipt of NuVox's BFFO.

8.9 Security Escort. Rates for a security escort are assessed according to the Pricing Schedule beginning with the scheduled escort time. AT&T will wait for one half (1/2) hour after the scheduled time for such an escort and NuVox shall pay for such half hour charges in the event NuVox fails to show up.

8.10 Cable Record Charges. These charges apply for work required to build cable records in AT&T systems. The VG/DS0 cable record charge is for a maximum of 3600 records. The Fiber cable record charge is for a maximum of ninety-nine (99) records. These nonrecurring fees will be billed upon receipt of NuVox's BFFO.

8.11 Power Rates. Rates for power are as set forth in the Pricing Schedule. Applicable rates shall vary depending on whether NuVox elects to be billed on a fused basis, by electing to remain (or install new collocations or augments) under the traditional collocation power billing method, or on a usage basis, by electing to convert collocations to (or install new collocations or augments under) the power usage metering option set forth in Section 9 below.

8.11.1 Under the fused amp billing option, NuVox shall be billed at the Commission's most recently approved fused amp recurring rate for DC power. However, if the Parties either previously agreed to "grandfather" such arrangements or such arrangements are grandfathered as a result of NuVox having provided documentation to AT&T demonstrating that NuVox paid installation costs under an ICB or nonrecurring rate schedule for the collocation arrangement power installation, NuVox will be billed the grandfathered recurring rate for the DC power set forth in the Pricing Schedule.

8.11.2 Other. If no rate is identified in the contract, the rate for the specific service or function will be negotiated by the Parties upon request by either Party.

8.12 Grandfathered Rates

8.12.1 The rates for the recurring charges for grandfathered CCXC will be the rates in effect before the Effective Date of this Agreement, if any, and such rates shall be set forth in the Pricing Schedule.

8.12.2 The grandfathered POT Bay rates are pursuant to state ordered rates for particular POT Bay elements.

9. Central Office Power

9.1 AT&T shall make available –48 Volt (-48V) Direct Current (DC) power for NuVox's Collocation Space at an AT&T Battery Distribution Fuse Bay (BDFB). If NuVox was previously served off AT&T's main power board pursuant to NuVox's previous Interconnection Agreement, that arrangement shall be grandfathered. Recurring charges for -48V DC power will be assessed as set forth in Section 8.11 above.

9.1.1 Fused Amp Billing Option. Monthly recurring charges for -48V DC power will be assessed per fused amp per month using the following formula:

For power provisioned from a BDFB – The number of fused amps requested by NuVox on its collocation application for power that is being provisioned from an AT&T BDFB should reflect a multiplier of 1.5 to convert the requested amperage to fused amps, with a minimum of ten (10) fused amps required. The number of fused amps requested by NuVox on its collocation application will be multiplied by the DC power fused amp rate set forth in the Pricing Schedule, which rate has already been adjusted through the application of the .67 multiplier.

For power provisioned from the main power board – The number of fused amps made available at the main power board, in increments of 225 amps/main power board circuit, multiplied by the DC power fused amp rate set forth in the Pricing Schedule, which rate has already been adjusted through the application of the .67 multiplier.

9.1.2 Central Office Physical Collocation Regional Power Usage Measurement Option.
The Central Office Regional Power Usage Measurement Option provided in this Section 9 shall be applicable for all nine (9) states in the AT&T region (Alabama, Florida, Georgia, Kentucky, Louisiana, Mississippi, North Carolina, South Carolina and Tennessee) as a package. This option shall be provided in all nine (9) states in lieu of other metered options that exist or may subsequently arise (by order or contract) in any of these nine (9) states for the duration of this Agreement. If any metered rates or terms of this power usage provision are modified pursuant to the change in law provision as set forth in the General Terms and Conditions of this Agreement then, for each state hereunder, all of the ordered rates and associated

terms and conditions shall apply thereafter and to each physical collocation arrangement to which the power usage measurement option applied and, to the extent that there are no such ordered rates in a state, the rates of the then current AT&T standard interconnection agreement shall apply in such state subject to the modification of Agreement provisions in the General Terms and Conditions. If any metered rates or terms of this power usage provision are modified by NuVox's adoption of the rates, terms and conditions of another CLEC's interconnection agreement pursuant to section 252 (i) of the Act in any of the states covered by this Agreement, such adopted rates, terms and conditions shall apply thereafter and to each physical collocation arrangement to which the power usage measurement option applied and, in any states not covered by such adoption, the rates, terms and conditions for power usage measurement, if any, of the then current AT&T standard interconnection agreement shall apply, provided that such language fully effectuates and is consistent with applicable state commission orders.

9.1.3 AC Usage Component of DC Power Charges. AT&T, or its AT&T Certified Supplier, will perform all metering activities, which will include providing the necessary ammeter or other measurement device, to measure the actual power usage being drawn by NuVox's physical collocation equipment on both the A and B power feeds. The AC Usage Component of the DC Power charge will be based upon the sum of either the instantaneous or busy hour average electrical current readings, depending on the capabilities of the ammeter or other measurement device. NuVox may, at its sole cost and expense, install or maintain its own meters on those BDFBs located in its own physical Collocation Space(s) and may notify AT&T if it would like to offer AT&T the option of using such meters for the purpose of establishing measurements. In such case, AT&T, or its AT&T Certified Supplier, will have the option of reading and recording the actual power usage from either the meter installed or maintained by NuVox on NuVox's own BDFB(s) or via an AT&T provided measurement device. The usage reading for the option elected by AT&T shall be used for purposes of calculating the billing, provided that AT&T elects one method and continues to use that method unless AT&T provides reasonable notice to NuVox to change the method.

9.1.3.1 If AT&T, or its AT&T Certified Supplier, requires access to NuVox's physical Collocation Space for purposes of measuring the power usage, AT&T or its AT&T Certified Supplier shall provide NuVox with a minimum of forty-eight (48) hours notice that access is required. NuVox shall respond to such request for access within twenty-four (24) hours for the purpose of establishing the date and time of access to NuVox's physical Collocation Space. Once the date and time of access to NuVox's physical Collocation Space has been agreed upon, NuVox and AT&T or its AT&T Certified Supplier shall adhere to the agreed upon date and time, or provide a minimum of three (3) hours notice to the other Party if the original appointment will be missed or must be cancelled and rescheduled. If NuVox fails to provide access to its physical Collocation Space or fails to provide AT&T/AT&T Certified Supplier with a minimum of three (3) hours notice of the necessity to cancel and/or reschedule the appointment, then NuVox shall pay, for the missed meter reading a non-recurring

charge, as set forth in the Pricing Schedule, and shall pay a non-recurring charge as set forth in the Pricing Schedule for each additional meter reading trip required to measure NuVox's power usage. If AT&T/AT&T Certified Supplier fails to provide NuVox with a minimum of three (3) hours notice of the necessity to cancel and/or reschedule the appointment, AT&T shall not bill NuVox a non-recurring charge, as set forth in the Pricing Schedule for such missed appointment, and shall waive the charge for the next additional meter reading trip required to measure NuVox's power usage.

9.1.3.2 For each new physical collocation arrangement for which NuVox desires the metered power usage measurement option, NuVox shall indicate on its Initial Application that the metered power usage measurement option is being elected. For each location that NuVox wants to convert to the metered power usage measurement option, NuVox will submit a Subsequent Application and agrees to include in the Comments section of the Subsequent Application the following comment:

> This Subsequent Application is NuVox's certification that NuVox is opting to convert this physical collocation arrangement to the power usage measurement option and will permit AT&T and/or the AT&T Certified Supplier to use an ammeter or other measurement device to measure its actual power usage or, at AT&T's election, provide AT&T and/or the AT&T Certified Supplier with access to NuVox's meter on NuVox's own BDFB(s) (if NuVox chooses to offer AT&T that option), located in NuVox's physical Collocation Space, to measure actual power usage on all power feeds.

9.1.3.3 AT&T will bill NuVox a Power Reconfiguration Application Fee, as set forth in the Pricing Schedule, on the date that AT&T provides an Application Response to each Subsequent Application requesting to convert a physical collocation arrangement to the metered power usage measurement option. AT&T shall then arrange for the measurement of NuVox's actual power usage on each power feed (each A and B feed) once per quarter at each of NuVox's physical collocation arrangements for which NuVox has submitted an Initial or Subsequent Application electing the metered power usage option. Based upon the actual power usage measurement taken by AT&T or the AT&T Certified Supplier, AT&T shall assess NuVox charges for AC power usage for the following quarter based upon NuVox's actual metered usage for each power feed (both the A and B feeds) or a minimum of ten (10) amps of –48V DC power usage for the sum of the A and B feeds for each power cable, whichever is greater. Such usage shall then be multiplied by the applicable AC power rate, set forth in the Pricing Schedule, to determine the appropriate monthly recurring AC Usage charge that will be billed to NuVox for the following three (3) calendar months or until the next AC power usage measurement is taken, whichever is later.

9.1.3.4 Either Party, within fifteen (15) calendar days of notice of the usage measurement established by the scheduled meter reading, may challenge the accuracy of that reading by requesting a new reading. If NuVox requests that an unscheduled (prior to the next scheduled quarterly power reading date) power usage reading be taken, then NuVox will be responsible for paying the "Additional Meter Reading Trip Charge"

contained in the Pricing Schedule. If AT&T requests a power usage reading be taken in this instance, then NuVox will not be charged the "Additional Meter Reading Trip Charge" for the unscheduled meter reading. If the readings vary by more than ten (10) % or five (5) Amps, whichever is greater, the Parties shall work cooperatively to reconcile such discrepancies and establish the appropriate usage figure in a reasonable and expeditious manner. If there is no discrepancy between the readings of ten (10) % or five (5) Amps, whichever is greater, then the Party disputing the original meter reading shall pay the Additional Meter Reading Trip Charge contained in the Pricing Schedule. If the readings do not vary outside these ranges, the initial reading will be used to calculate NuVox's AC Usage charge until the next scheduled power reading.

9.1.3.5 When NuVox submits the appropriate Initial or Subsequent Application indicating its desire to elect the power measurement usage option for a particular physical collocation arrangement in a specific Central Office, AT&T will provide the associated Application Response pursuant to Section 6 of this Attachment. It will then be the responsibility of NuVox to submit a BFFO, indicating its desire to proceed with its request. After AT&T receives the BFFO from NuVox, the Initial or Subsequent Application will be completed by AT&T within the provisioning intervals contained in Section 7 of this Attachment and NuVox will be notified of the Space Ready Date or when the appropriate record and database changes have been made by AT&T to reflect NuVox's election of the power measurement usage option (which will be considered the "Space Ready Date" for purposes of a Subsequent Application submitted to convert a particular physical collocation arrangement in a specific Central Office to the power measurement usage option). AT&T will not permit NuVox to elect an earlier Space Acceptance Date than the Space Ready Date for any request submitted via a Subsequent Application for an existing physical collocation arrangement. When a Subsequent Application is used to elect the power measurement usage option and there are no other changes requested, billing for the recurring charges associated with the AC Usage and DC Power Infrastructure will begin upon the Space Ready Date. If NuVox occupies the space prior to the Space Ready Date, for Initial Application requests only, the date NuVox occupies the space will be deemed the new Space Acceptance Date and the billing for the AC Usage and DC Power Infrastructure will begin on that date. When NuVox elects to move to the power measurement usage option, the number of fused amps of DC Power infrastructure capacity requested by NuVox on its Initial or Subsequent Application will be used for calculating the number of amps to be billed for AC Usage until such time as AT&T or its AT&T Certified Supplier can perform, under the currently existing quarterly meter reading schedule, a reading of NuVox's power usage for the requested physical Collocation Space. As soon as this reading has been taken, AT&T will adjust NuVox's billing accordingly to reflect the actual metered usage back to the Space Acceptance Date. AT&T will also use this reading for billing purposes until the next quarterly meter reading is performed by AT&T or its AT&T Certified Supplier.

9.1.4 Current DC Power Plant Infrastructure Component of DC Power Charges. AT&T shall assess NuVox a monthly recurring charge as set forth in the Pricing Schedule

for AT&T's power plant infrastructure component of the DC power charges based upon NuVox's fused DC power amperage capacity, as reflected by NuVox on its Initial Application, as well as any Subsequent Applications (i.e., augment applications), for the particular physical collocation arrangement(s) being converted to or electing the power usage metering option for those Central Offices specified by NuVox.

9.1.5 Grandfathered DC Power Plant Infrastructure Component of DC Power Charges. For those physical collocation arrangements that were provisioned to NuVox under an individual case basis pricing structure, where NuVox has already paid all non-recurring charges associated with the DC infrastructure capital costs associated with such physical collocation arrangement, and for which NuVox has submitted a Subsequent Application to convert such physical collocation arrangements to the metered power usage measurement option, AT&T shall assess NuVox a monthly recurring charge as set forth in the Pricing Schedule for AT&T's power plant infrastructure expense component of the DC power charges, based upon NuVox's fused DC power amperage capacity, as reflected by NuVox on its Initial Application, as well as any Subsequent Applications (i.e., augment applications), for the particular physical collocation arrangement(s) being converted to the power usage metering option for those Central Offices specified by NuVox.

9.1.6 Other DC Power Metering Charges. NuVox agrees to notify AT&T when NuVox has removed or installed telecommunications equipment in NuVox's physical Collocation Space and to ensure that the existing fused DC power capacity is sufficiently engineered to accommodate the power requirements associated with the installation of additional equipment in NuVox's physical Collocation Space. An associated change in power usage will be reflected in the next quarterly power measurement billing cycle.

9.1.6.1 AT&T will bill NuVox a monthly recurring charge per physical Collocation Space for NuVox's physical collocation arrangements in each state, which reflects: 1) AT&T's expenses to program the applicable billing systems to accept and process the power usage measurement option, 2) AT&T's expenses associated with its workforce loading the measured power usage data into AT&T's OSS and billing systems, and 3) the costs for AT&T/AT&T Certified Supplier to supply the clamp-on ammeter or other measurement device and perform the task of reading and recording NuVox's actual power usage at each requested physical collocation site. This "Meter Reading" monthly recurring rate element will be assessed to NuVox for the first twelve (12) power circuits (each A and B feed pair counts as two circuits), and then for each additional two (2) circuits, read by AT&T or its AT&T Certified Supplier, at the rates set forth in the Pricing Schedule and based on whether the power meter is provided by AT&T or its AT&T Certified Supplier or NuVox.

9.2 When obtaining power from the BDFB, fuses and power cables (A&B) must be engineered (sized) and installed by NuVox's AT&T Certified Supplier. NuVox is responsible for contracting with an AT&T Certified Supplier for power distribution feeder cable runs from an AT&T BDFB to NuVox's equipment. The AT&T Certified Supplier contracted by NuVox must provide AT&T with a copy of the

engineering power specifications prior to the day on which NuVox's equipment becomes operational. AT&T will provide the common power feeder cable support structure between the AT&T BDFB and NuVox's Collocation Space. NuVox shall contract with an AT&T Certified Supplier who will be responsible for the following: dedicated power cable support structure within NuVox's Collocation Space, power cable feeds, and terminations of cable.

9.3 If NuVox elects to install its own DC Power Plant, AT&T shall provide Alternating Current (AC) power to feed NuVox's DC Power Plant. Charges for AC power will be assessed per breaker ampere. When obtaining power from an AT&T service panel, protection devices and power cables must be engineered (sized) and installed by NuVox's AT&T Certified Supplier, with the exception that AT&T shall engineer and install protection devices and power cables for Adjacent Collocation. NuVox's AT&T Certified Supplier must also provide a copy of the engineering power specifications prior to the day on which NuVox's equipment becomes operational. Charges for AC power shall be assessed pursuant to the rates specified in the Pricing Schedule. AC power voltage and phase ratings shall be determined on a per location basis. At NuVox's option, NuVox may arrange for AC power in an Adjacent Collocation arrangement from a retail provider of electrical power.

9.4 NuVox has the option to purchase power directly from an electric utility company where technically feasible and where space is available in a requested AT&T Premises. Under such an option, NuVox is responsible for contracting with the electric utility company for its own power feed and meter, and is financially responsible for purchasing all equipment necessary to accomplish the conversion of the commercial AC power to DC power, including inverters, batteries, power boards, bus bars, BDFBs, backup power supplies and power cabling. The actual work to install this arrangement must be performed by an AT&T Certified Supplier hired by NuVox. NuVox's AT&T Certified Supplier must comply with all applicable national, regional, state and local safety, electrical, fire and building codes, including the National Electric Safety Code standards, in installing this power arrangement, just as AT&T is required to comply with these codes. NuVox must submit an application to AT&T for the appropriate amount of collocation space that NuVox requires to install this type of power arrangement. AT&T will evaluate the request and determine if the appropriate amount of space is available within the office for the installation of NuVox's power equipment and facilities. This type of power arrangement must be located in an appropriate area in the central office that has been properly conditioned for the installation of power equipment and conforms to the applicable national, regional, state and local safety, electrical, fire and building codes. AT&T shall waive the application fee or any other nonrecurring charge that would otherwise be due from a CLEC that decides to reconfigure an existing collocation power arrangement so as to purchase power directly from an electric utility company as provided herein. NuVox shall be responsible for the recurring charges associated with the central office space needed for collocation of this type of power arrangement, including space required to place associated power-related equipment and facilities (i.e., batteries, generator, power meter, etc.). If there is no space available for this type of

power arrangement in the requested central office, AT&T may seek a waiver of these requirements from the state Commission for the central office requested. NuVox would still have the option to order its power needs directly from AT&T.

9.5 AT&T will revise monthly recurring power charges to reflect a power upgrade upon notification of the completion of the upgrade by NuVox's AT&T Certified Supplier. AT&T will revise recurring power charges to reflect a power reduction upon AT&T's receipt of the Power Reduction Form from NuVox certifying the completion of the power reduction. Notwithstanding the foregoing, if NuVox's AT&T Certified Supplier has not removed or, at AT&T's discretion, cut the power cabling within thirty (30) calendar days, the power reduction will not become effective until the cabling is removed by NuVox's AT&T Certified Supplier and NuVox shall pay the power rate applicable prior to the power reduction request for the period between the receipt of the Power Reduction Form and the date the power cabling is actually removed.

9.6 If NuVox requests a reduction in the amount of power that AT&T is currently providing, NuVox must submit a Subsequent Application. If no modification to the Collocation Space is requested other than the reduction in power, the Power Reconfiguration Application Fee as set forth in the Pricing Schedule will apply. If modifications are requested in addition to the reduction of power, the Subsequent Application Fee will apply. AT&T will bill this nonrecurring fee on the date that AT&T provides an Application Response.

9.7 If NuVox has grand-fathered power configurations currently served from the AT&T main power board and requests that its power be reconfigured to connect to an AT&T BDFB, in a specific central office, NuVox must submit a Subsequent Application. AT&T will respond to such application within seven (7) calendar days and a Subsequent Application fee will apply for this reconfiguration to an AT&T BDFB.

9.7.1 In Alabama and Louisiana, if NuVox has grandfathered power configurations currently served from the AT&T main power board and requests that its power be reconfigured to connect to an AT&T BDFB, in a specific central office, NuVox must submit a Subsequent Application. AT&T will respond to such application within seven (7) calendar days and no application fee will apply [BST clarification] for this one time only power reconfiguration to an AT&T BDFB. For any power reconfigurations thereafter, NuVox will submit a Subsequent Application and the appropriate application fee will apply.

9.8 Remote Site Power. AT&T shall make available –48 Volt (-48V) DC power for NuVox's Remote Collocation Space at an AT&T Battery Distribution Fuse Bay (BDFB) within the Remote Site Location. The charge for power shall be assessed as part of the recurring charge for rack/bay space. If the power requirements for NuVox's equipment exceed the capacity available, then such power requirements shall be assessed on an individual case basis (ICB). AT&T will revise recurring power charges to reflect a power upgrade upon notification of the completion of the

upgrade by NuVox's AT&T Certified Supplier. AT&T will revise recurring power charges to reflect a power reduction upon AT&T's receipt of the Power Reduction Form from NuVox certifying the completion of the power reduction, including the removal of the power cabling by NuVox's AT&T Certified Supplier.

9.9 Remote Site Adjacent Collocation Power. Charges for AC power will be assessed per breaker ampere per month. Rates include the provision of commercial and standby AC power, where available. When obtaining power from an AT&T service panel, protection devices and power cables must be engineered (sized) and installed by NuVox's AT&T Certified Supplier, with the exception that AT&T shall engineer and install protection devices and power cables for Adjacent Collocation. NuVox's AT&T Certified Supplier must also provide a copy of the engineering power specification prior to the equipment becoming operational. Charges for AC power shall be assessed pursuant to the rates specified in the Pricing Schedule. AC power voltage and phase ratings shall be determined on a per location basis. At NuVox's option, NuVox may arrange for AC power in an Adjacent Collocation arrangement from a retail provider of electrical power.

10. Insurance

10.1 NuVox shall, at its sole cost and expense, procure, maintain, and keep in force insurance as specified in this Section and underwritten by insurance companies licensed to do business in the states applicable under this Agreement and having a Best's Insurance Rating of A-.

10.2 NuVox shall maintain the following specific coverage:

10.2.1 Commercial General Liability coverage in the amount of ten million dollars ($10,000,000.00) or a combination of Commercial General Liability and Excess/Umbrella coverage totaling not less than ten million dollars ($10,000,000.00). AT&T shall be named as an Additional Insured on the Commercial General Liability policy as specified herein.

10.2.2 Statutory Workers Compensation coverage and Employers Liability coverage in the amount of one hundred thousand dollars ($100,000.00) each accident, one hundred thousand dollars ($100,000.00) each employee by disease, and five hundred thousand dollars ($500,000.00) policy limit by disease.

10.3 All policies purchased by NuVox shall be deemed to be primary and not contributing to or in excess of any similar coverage purchased by AT&T. All insurance must be in effect on or before the date equipment is delivered to Premises and shall remain in effect for the term of this Attachment or until all NuVox's property has been removed from AT&T's Premises, whichever period is longer. If NuVox fails to maintain required coverage, AT&T may pay the premiums thereon and seek reimbursement of same from NuVox.

10.4 NuVox shall submit certificates of insurance reflecting the coverage required pursuant to this Section a minimum of ten (10) business days prior to the commencement of any work in the Collocation Space. Failure to meet this interval may result in construction and equipment installation delays. NuVox shall arrange for AT&T to receive thirty (30) calendar days' advance notice of cancellation from NuVox's insurance company. NuVox shall forward a certificate of insurance and notice of cancellation/non-renewal to AT&T at the following address:

Jackie Wynn
3535 Colonade Parkway
Birmingham, AL 35243

10.5 NuVox must conform to recommendations made by AT&T's fire insurance company to the extent AT&T has agreed to, or shall hereafter agree to, such recommendations.

10.6 Self-Insurance. If NuVox's net worth exceeds five hundred million dollars ($500,000,000), NuVox may elect to request self-insurance status in lieu of obtaining any of the insurance required in Sections 9.2.1 and 9.2.2 above. NuVox shall provide audited financial statements to AT&T thirty (30) calendar days prior to the commencement of any work in the Collocation Space. AT&T shall then review such audited financial statements and respond in writing to NuVox in the event that self-insurance status is not granted to NuVox. If AT&T approves NuVox for self-insurance, NuVox shall annually furnish to AT&T, and keep current, evidence of such net worth that is attested to by one of NuVox's corporate officers. The ability to self-insure shall continue so long as the NuVox meets all of the requirements of this Section. If NuVox subsequently no longer satisfies this Section, NuVox is required to purchase insurance as indicated by Sections 10.2.1 and 10.2.2 above.

11. Mechanics Liens

11.1 If any mechanics lien or other liens shall be filed against property of either Party (AT&T or NuVox), or any improvement thereon by reason of or arising out of any labor or materials furnished or alleged to have been furnished or to be furnished to or for the other Party or by reason of any changes, or additions to said property made at the request or under the direction of the other Party, the other Party directing or requesting those changes shall, within thirty (30) business days after receipt of written notice from the Party against whose property said lien has been filed, either pay such lien or cause the same to be bonded off the affected property in the manner provided by law. The Party causing said lien to be placed against the property of the other shall also defend, at its sole cost and expense, on behalf of the other, any action, suit or proceeding which may be brought for the enforcement of such liens and shall pay any damage and discharge any judgment entered thereon.

12. Inspections

12.1 AT&T may conduct an inspection of NuVox's equipment and facilities in the Collocation Space(s) prior to the activation of facilities between NuVox's equipment and equipment of AT&T. AT&T may conduct an inspection if NuVox adds equipment and may otherwise conduct routine inspections at reasonable intervals mutually agreed upon by the Parties. AT&T shall provide NuVox with a minimum of seventy-two (72) hours or three (3**)** business days, whichever is greater, advance notice of all such inspections. All costs of such inspection shall be borne by AT&T.

13. Security and Safety Requirements

13.1 Unless otherwise specified, NuVox will be required, at its own expense, to conduct a statewide investigation of criminal history records for each NuVox employee hired in the past five years being considered for work on the Premises, for the states/counties where the NuVox employee has worked and lived for the past five years. Where state law does not permit statewide collection or reporting, an investigation of the applicable counties is acceptable. NuVox shall not be required to perform this investigation if an affiliated company of NuVox has performed an investigation of the NuVox employee seeking access, if such investigation meets the criteria set forth above. This requirement will not apply if NuVox has performed a pre-employment statewide investigation of criminal history records of the NuVox employee for the states/counties where the NuVox employee has worked and lived for the past five years or, where state law does not permit a statewide investigation, an investigation of the applicable counties.

13.2 NuVox will be required to administer to its personnel assigned to the Premises security training either provided by AT&T, or meeting reasonable and nondiscriminatory criteria defined by AT&T.

13.3 NuVox shall provide its employees and agents with picture identification, which must be worn and visible at all times while in the Collocation Space or other areas in or around the Premises. The photo identification card shall bear, at a minimum, the employee's name and photo and NuVox's name. AT&T reserves the right to remove from its Premises any employee of NuVox not possessing identification issued by NuVox or who has violated any of the reasonable and nondiscriminatory criteria outlined in AT&T's CLEC Security Training documents. NuVox shall hold AT&T harmless for any damages resulting from such removal of its personnel from AT&T Premises.

13.4 NuVox shall not assign to the Premises any personnel with records of felony criminal convictions. NuVox shall not assign to the Premises any personnel with records of misdemeanor convictions, except for misdemeanor traffic violations, without advising AT&T of the nature and gravity of the offense(s). AT&T reserves the right to refuse building access to any NuVox personnel who have been identified to have

misdemeanor criminal convictions. Notwithstanding the foregoing, in the event that NuVox chooses not to advise AT&T of the nature and gravity of any misdemeanor conviction, NuVox may, in the alternative, certify to AT&T that it shall not assign to the Premises any personnel with records of misdemeanor convictions (other than misdemeanor traffic violations).

13.4.1 NuVox shall not knowingly assign to the Premises any individual who was a former employee and whose employment with AT&T was terminated for a felony for which they were convicted.

13.4.2 NuVox shall not knowingly assign to the Premises any individual who was a former supplier of AT&T and whose access to a Premises was revoked due to a felony for which they were convicted.

13.5 For each NuVox employee or agent hired by NuVox within five years of being considered for work on the Premises, who requires access to a Premises pursuant to this Attachment, NuVox shall furnish AT&T, prior to an employee or agent gaining such access, a certification that the aforementioned background check and security training were completed. The certification will contain a statement that no felony convictions were found and certify that the employee completed the security training. If the employee's criminal history includes misdemeanor convictions, NuVox will disclose the nature of the convictions to AT&T at that time. In the alternative, NuVox may certify to AT&T that it shall not assign to the Premises any personnel with records of misdemeanor convictions other than misdemeanor traffic violations.

13.5.1 For all other NuVox employees requiring access to a Premises pursuant to this Attachment, NuVox shall furnish AT&T, prior to an employee gaining such access, a certification that the employee is not subject to the requirements of Section 13.5 above and that security training was completed by the employee.

13.6 At AT&T's request, NuVox shall promptly remove from AT&T's Premises any employee of NuVox that AT&T does not wish to grant access to its AT&T Premises pursuant to any investigation conducted by AT&T or prior to the initiation of an investigation if an employee of NuVox is found interfering with the property or personnel of AT&T or another collocated telecommunications carrier in a material way. For purposes of this provision, material shall mean some action that could have a substantial impact on the operations, equipment or personnel of AT&T or another collocated telecommunications carrier. Such investigation shall be commenced and completed by AT&T as promptly and expeditiously as possible. The Parties shall cooperate and communicate, to the extent circumstances permit, to ensure that the Parties may take appropriate remedial measures.

13.7 Security Violations. Each Party reserves the right to interview the other Party**'s** employees, agents, or suppliers in the event of wrongdoing in or on AT&T's property, or NuVox's Collocation Space, or involving AT&T's, NuVox's, or another collocated telecommunications carrier's property or personnel, provided that the Party shall provide reasonable notice to the other Party's designated security

representative of such interview. Each Party and its suppliers shall reasonably cooperate with the other Party's investigation into allegations of wrongdoing or criminal conduct committed by, witnessed by, or involving such Parties' employees, agents, or suppliers. Additionally, each Party reserves the right to bill the other Party for all reasonable costs associated with investigations involving its employees, agents, or suppliers if it is established and mutually agreed in good faith that such Parties' employees, agents**,** or suppliers are responsible for the alleged act. Each Party shall bill the other Party for the replacement or repair of property, as appropriate, which is stolen or damaged where an investigation determines the culpability of the other Party's employees, agents, or suppliers and where the other Party agrees, in good faith, with the results of such investigation. Each Party agrees that it shall notify the other Party in writing immediately in the event that it discovers one of its employees working on the Premises is a possible security risk. Upon request of the other Party, the Party who is the employer shall discipline consistent with its employment practices, up to and including removal from AT&T's Premises, any employee found to have violated the security and safety requirements of this Section.

13.8 Use of Supplies. Unauthorized use of equipment, supplies or other property by either Party, whether or not used routinely to provide telephone service will be strictly prohibited and handled appropriately. Costs associated with such unauthorized use may be charged to the offending Party, as may be all associated investigative costs.

13.9 Use of Official Lines. Except for non-toll calls necessary in the performance of their work, neither Party shall use the telephones of the other Party on the Premises. Charges for unauthorized telephone calls may be charged to the offending Party, as may be all associated investigative costs.

13.10 Accountability. Full compliance with the Security requirements of this Section shall in no way limit the accountability of either Party to the other for the improper actions of its employees.

13.11 AT&T will use its best efforts to adequately secure the area which houses NuVox's equipment to prevent unauthorized entry. AT&T will immediately notify NuVox's emergency contact of any actual or attempted security breaches to the NuVox's collocation space to the extent AT&T becomes aware of such breaches.

14. Destruction of Collocation Space

14.1 In the event a Collocation Space is wholly or partially damaged by fire, windstorm, tornado, flood or by similar Acts of God or force majeure circumstances beyond a Party's reasonable control to such an extent as to be rendered wholly unsuitable for NuVox's permitted use hereunder, then either Party may elect within ten (10) calendar days after such damage, to terminate occupancy of the damaged Collocation Space, and if either Party shall so elect, by giving the other written notice of termination, both Parties shall stand released of and from further liability under the

terms hereof. If the Collocation Space shall suffer only minor damage and shall not be rendered wholly unsuitable for NuVox's permitted use, or is damaged and the option to terminate is not exercised by either Party, AT&T covenants and agrees to proceed promptly without expense to NuVox, except for improvements not to the property of AT&T, to repair the damage. AT&T shall have a reasonable time within which to rebuild or make any repairs, and such rebuilding and repairing shall be subject to delays caused by storms, shortages of labor and materials, government regulations, strikes, walkouts, and causes beyond the control of AT&T, which causes shall not be construed as limiting factors, but as exemplary only. NuVox may, at its own expense, accelerate the rebuild of its collocated space and equipment provided however that an AT&T Certified Supplier is used and the necessary space preparation has been completed. If NuVox's acceleration of the project increases the cost of the project, then those additional charges will be incurred by NuVox. Where allowed and where practical, NuVox may erect a temporary facility while AT&T rebuilds or makes repairs. In all cases where the Collocation Space shall be rebuilt or repaired, NuVox shall be entitled to an equitable abatement of rent and other charges, depending upon the unsuitability of the Collocation Space for NuVox's permitted use, until such Collocation Space and access to necessary power is fully repaired and restored and NuVox's equipment installed therein (but in no event later than thirty (30) calendar days after the Collocation Space is fully repaired and restored). Where NuVox has placed an Adjacent Arrangement pursuant to Section 3.4 above, NuVox shall have the sole responsibility to repair or replace said Adjacent Arrangement provided herein. Pursuant to this Section, AT&T will restore the associated services to the Adjacent Arrangement.

15. Eminent Domain

15.1 If the whole of a Collocation Space or Adjacent Arrangement shall be taken by any public authority under the power of eminent domain, then this Attachment shall terminate with respect to such Collocation Space or Adjacent Arrangement as of the day possession shall be taken by such public authority and rent and other charges for the Collocation Space or Adjacent Arrangement shall be paid up to that day, or the day upon which the Collocation Space can no longer be used for interconnection and access to unbundled network elements, whichever is earlier, with proportionate refund by AT&T of such rent and charges as may have been paid in advance for a period subsequent to the date of the taking. If any part of the Collocation Space or Adjacent Arrangement shall be taken under eminent domain, AT&T and NuVox shall each have the right to terminate this Attachment with respect to such Collocation Space or Adjacent Arrangement and declare the same null and void, by written notice of such intention to the other Party within ten (10) calendar days after such taking.

16. Nonexclusivity

16.1 NuVox understands that this Attachment is not exclusive and that AT&T may enter into similar agreements with other Parties. Assignment of space pursuant to all such agreements shall be determined by space availability and made on a first come, first served basis**.**

17. Notice of Non-Emergency Work

17.1 AT&T shall provide NuVox with written notice three (3) business days prior to those instances where AT&T or its subcontractors may be performing non-emergency work that has a substantial likelihood of directly affecting the Collocation Space occupied by NuVox, or that is directly related to circuits that support NuVox equipment. AT&T will inform NuVox by telephone of emergency related activity that AT&T or its subcontractors may be performing that has a substantial likelihood of directly affecting the Collocation Space occupied by NuVox, or is directly related to circuits that support NuVox equipment. Notification of any emergency related activity shall be made as soon as practicable after AT&T learns that such emergency activity is necessary so that NuVox can take any action required to monitor or protect its service.

ENVIRONMENTAL AND SAFETY PRINCIPLES

The following principles provide basic guidance on environmental and safety issues when applying for and establishing Collocation arrangements.

1. GENERAL PRINCIPLES

1.1 Compliance with Applicable Law. AT&T and NuVox agree to comply with applicable federal, state, and local environmental and safety laws and regulations including U.S. Environmental Protection Agency (USEPA) regulations issued under the Clean Air Act (CAA), Clean Water Act (CWA), Resource Conservation and Recovery Act (RCRA), Comprehensive Environmental Response, Compensation and Liability Act (CERCLA), Superfund Amendments and Reauthorization Act (SARA), the Toxic Substances Control Act (TSCA), and OSHA regulations issued under the Occupational Safety and Health Act of 1970, as amended and NFPA and National Electrical Codes (NEC) and the NESC (Applicable Laws). Each Party shall notify the other if compliance inspections are conducted by regulatory agencies and/or citations are issued that relate to any aspect of this Attachment.

1.2 Notice. AT&T and NuVox shall provide notice to the other, including Material Safety Data Sheets (MSDSs), of known and recognized physical hazards or Hazardous Chemicals existing on site or brought on site. A Hazardous Chemical inventory list is posted on an OSHA Poster and updated annually at each Central Office. This Poster is normally located near the front entrance of the building or in the lounge area. Each Party is required to provide specific notice for known potential Imminent Danger conditions. NuVox should contact 1-800-743-6737 for any AT&T MSDS required.

1.3 Practices/Procedures. AT&T may make available additional environmental control procedures for NuVox to follow when working at a Premises (See Section 2, below). These practices/procedures will represent the regular work practices required to be followed by the employees and suppliers of AT&T for environmental protection. NuVox will require its suppliers, agents and others accessing the Premises to comply with these practices. Section 2 lists the Environmental categories where BST practices should be followed by NuVox when operating in the Premises.

1.4 Environmental and Safety Inspections. AT&T reserves the right to inspect the NuVox space with proper notification. AT&T reserves the right to stop any NuVox work operation that imposes Imminent Danger to the environment, employees or other persons in the area or Premises.

1.5 Hazardous Materials Brought On Site. Any hazardous materials brought into, used, stored or abandoned at the Premises by NuVox are owned by NuVox. NuVox will indemnify AT&T for claims, lawsuits or damages to persons or property caused by these materials. Without prior written AT&T approval, no substantial new safety or environmental hazards can be created by NuVox or different hazardous materials

used by NuVox at Premises. NuVox must demonstrate adequate emergency response capabilities for its materials used or remaining at the Premises.

1.6 Spills and Releases. When contamination is discovered at a Premises, either Party discovering the condition must notify the other Party. All Spills or Releases of regulated materials will immediately be reported by NuVox to AT&T.

1.7 Coordinated Environmental Plans and Permits. AT&T and NuVox will coordinate plans, permits or information required to be submitted to government agencies, such as emergency response plans, spill prevention control and countermeasures (SPCC) plans and community reporting. If fees are associated with filing, AT&T and NuVox will develop a cost sharing procedure. If AT&T's permit or EPA identification number must be used, NuVox must comply with all of AT&T's permit conditions and environmental processes, including environmental "best management practices (BMP)" (see Section 2, below) and/or selection of BST disposition vendors and disposal sites.

1.8 Environmental and Safety Indemnification. AT&T and NuVox shall indemnify, defend and hold harmless the other Party from and against any claims (including, without limitation, third-party claims for personal injury or death or real or personal property damage), judgments, damages (including direct and indirect damages and punitive damages), penalties, fines, forfeitures, costs, liabilities, interest and losses arising in connection with the violation or alleged violation of any Applicable Law or contractual obligation or the presence or alleged presence of contamination arising out of the acts or omissions of the indemnifying Party, its agents, suppliers, or employees concerning its operations at the Premises.

2. CATEGORIES FOR CONSIDERATION OF ENVIRONMENTAL ISSUES

2.1 When performing functions that fall under the following Environmental categories on AT&T's Premises, NuVox agrees to comply with the applicable sections of the current issue of AT&T's Environmental and Safety Methods and Procedures (M&Ps), incorporated herein by this reference. NuVox further agrees to cooperate with AT&T to ensure that NuVox's employees, agents, and/or suppliers are knowledgeable of and satisfy those provisions of AT&T's Environmental M&Ps which apply to the specific Environmental function being performed by NuVox, its employees, agents and/or suppliers.

2.2 The most current version of the reference documentation must be requested from NuVox's AT&T Regional Contract Manager (RCM) (f/k/a Account Team Collocation Coordinator – ATCC).

ENVIRONMENTAL CATEGORIES	ENVIRONMENTAL ISSUES	ADDRESSED BY THE FOLLOWING DOCUMENTATION
Disposal of hazardous material or other regulated material (e.g., batteries, fluorescent tubes, solvents & cleaning materials)	Compliance with all applicable local, state, & federal laws and regulations Pollution liability insurance EVET approval of supplier	Std T&C 450 Fact Sheet Series 17000 Std T&C 660-3 Approved Environmental Vendor List (Contact RCM Representative)
Emergency response	Hazmat/waste release/spill fire safety emergency	Fact Sheet Series 17000 Building Emergency Operations Plan (EOP) (specific to and located on Premises)
Contract labor/outsourcing for services with environmental implications to be performed on AT&T Premises (e.g., disposition of hazardous material/waste; maintenance of storage tanks)	Compliance with all applicable local, state, & federal laws and regulations Performance of services in accordance with AT&T's environmental M&Ps Insurance	Std T&C 450 Std T&C 450-B (Contact RCM Representative for copy of appropriate E/S M&Ps.) Std T&C 660
Transportation of hazardous material	Compliance with all applicable local, state, & federal laws and regulations Pollution liability insurance EVET approval of supplier	Std T&C 450 Fact Sheet Series 17000 Std T&C 660-3 Approved Environmental Vendor List (Contact RCM Representative)
Maintenance/operations work which may produce a waste Other maintenance work	Compliance with all applicable local, state, & federal laws and regulations Protection of AT&T employees and equipment	Std T&C 450 29CFR 1910.147 (OSHA Standard) 29CFR 1910 Subpart O (OSHA Standard)

Janitorial services	All waste removal and disposal must conform to all applicable federal, state and local regulations All Hazardous Material and Waste Asbestos notification and protection of employees and equipment	Procurement Manager (CRES Related Matters)-AT&T Supply Chain Services Fact Sheet Series 17000 GU-BTEN-001BT, Chapter 3 BSP 010-170-001BS (Hazcom)
Manhole cleaning	Compliance with all applicable local, state, & federal laws and regulations Pollution liability insurance EVET approval of supplier	Std T&C 450 Fact Sheet 14050 BSP 620-145-011PR Issue A, August 1996 Std T&C 660-3 Approved Environmental Vendor List (Contact RCM Representative)
Removing or disturbing building materials that may contain asbestos	Asbestos work practices	GU-BTEN-001BT, Chapter 3 For questions regarding removing or disturbing materials that contain asbestos, call the AT&T Building Service Center: AL, MS, TN, KY & LA (local area code) 557-6194 FL, GA, NC & SC (local area code) 780-2740

3. DEFINITIONS

Generator. Under RCRA, the person whose act produces a Hazardous Waste, as defined in 40 CFR 261, or whose act first causes a Hazardous Waste to become subject to regulation. The Generator is legally responsible for the proper management and disposal of Hazardous Wastes in accordance with regulations.

Hazardous Chemical. As defined in the U.S. Occupational Safety and Health (OSHA) hazard communication standard (29 CFR 1910.1200), any chemical which is a health hazard or physical hazard.

Hazardous Waste. As defined in Section 1004 of RCRA.

Imminent Danger. Any conditions or practices at a Premises which are such that a danger exists

which could reasonably be expected to cause immediate death or serious harm to people or immediate significant damage to the environment or natural resources.

Spill or Release. As defined in Section 101 of CERCLA.

4. ACRONYMS

RCM – Regional Collocation Manager (f/k/a Account Team Collocation Coordinator)

BST – AT&T Telecommunications

CRES – Corporate Real Estate and Services (formerly PS&M)

DEC/LDEC - Department Environmental Coordinator/Local Department Environmental Coordinator

E/S – Environmental/Safety

EVET - Environmental Vendor Evaluation Team

GU-BTEN-001BT - AT&T Environmental Methods and Procedures

NESC - National Electrical Safety Codes

P&SM - Property & Services Management

Std T&C - Standard Terms & Conditions

Attachment 5

Access to Numbers and Number Portability

TABLE OF CONTENTS

1. NON-DISCRIMINATORY ACCESS TO TELEPHONE NUMBERS 3

2. LNP.....4

3. OSS RATES.....5

ACCESS TO NUMBERS AND NUMBER PORTABILITY

1. NON-DISCRIMINATORY ACCESS TO TELEPHONE NUMBERS

1.1 During the term of this Agreement, where NuVox is utilizing its own switch, NuVox shall contact the North American Numbering Plan Administrator (NANPA), or, where applicable, the relevant Number Pool Administrator for the assignment of numbering resources.

1.2 Where AT&T provides local switching or resold services to NuVox, AT&T will provide NuVox with online access to available telephone numbers as defined by applicable FCC rules and regulations on a first come first served basis. NuVox acknowledges that such access to numbers shall be in accordance with the appropriate FCC rules and regulations. NuVox may designate up to a forecasted six (6) months supply of available numbers as intermediate (an available number provided to NuVox) telephone numbers per rate center if the following conditions are met:

1.2.1 NuVox must: (1) indicate that all of the intermediate numbers currently held by NuVox in each rate center where NuVox will be requesting intermediate telephone numbers have six (6) or less months to exhaust; (2) supply projected monthly telephone number demand on a rate center basis for the coming twelve (12) months for each rate center where NuVox will be requesting intermediate telephone numbers; and, (3) demonstrate that the utilization level on current intermediate numbers held by NuVox in the rate center where NuVox is requesting telephone numbers has reached at least 70%. The above information will be provided by NuVox by submitting to AT&T a fully completed "CO Code Assignments Months To Exhaust Certification Worksheet – TN Level" ("MTE Worksheet"), Appendix B to the Central Office Code (NXX) Assignments Guidelines, INC 95-0407-008 for each rate center where NuVox will be requesting intermediate telephone numbers. The utilization level is calculated by dividing all intermediate numbers currently assigned by NuVox to customers by the total number of intermediate numbers held by NuVox in the rate center and multiplying the result by one hundred (100). After June 30, 2004, rate center utilization level must be at 75% (Part F of the MTE Worksheet).

1.2.2 If fulfilling NuVox's request for intermediate numbers results in AT&T having to submit a request for additional telephone numbers to a national numbering administrator (either NANPA CO Code Administration or NeuStar Pooling Administration or their successors), AT&T will submit the required numbering request to the national numbering administrator to satisfy NuVox's request for intermediate numbers. AT&T will also pursue all appropriate steps (including submitting a safety valve request (petition) to the appropriate Commission if the numbering request is denied by the national administrator) to satisfy NuVox's

request for intermediate numbers. In these cases, AT&T is not obligated to fulfill the request by NuVox for intermediate numbers unless, and until, AT&T's request for additional numbering resources is granted.

1.2.3 NuVox agrees to supply supporting information for any numbering request and/or safety valve request that AT&T files pursuant to Section 1.2.2 above.

1.3 NuVox acknowledges that there may be instances where there is an industry shortage of available telephone numbers in a NPA. These instances occur where a jeopardy status has been declared by NANPA and the industry has determined that limiting the assignment of new numbers is the appropriate method to employ until the jeopardy can be alleviated. In such NPA jeopardy situations where assignment of new numbers is restricted as per the jeopardy guidelines developed by the industry, AT&T may request that NuVox cancel all or a portion of its unassigned intermediate numbers. NuVox consent to AT&T's request shall not be unreasonably withheld.

2. LNP

2.1 The Parties will offer Number Portability in accordance with rules, regulations and guidelines adopted by the Commission, the FCC and industry fora.

2.2 End User Line Charge. Where NuVox subscribes to AT&T's local switching, AT&T shall bill and NuVox shall pay the end user line charge associated with implementing LNP as set forth in AT&T's FCC Tariff No. 1. This charge is not subject to the resale discount set forth in Attachment 1 of this Agreement.

2.3 SMS Administration. The Parties will work cooperatively with other local service providers to establish and maintain contracts for the LNP Service Management System (SMS).

2.4 Network Architecture. The parties agree to adhere to applicable FCC Rules and Orders governing LNP network architecture.

2.5 Signaling. In connection with LNP, each Party agrees to use SS7 signaling in accordance with applicable FCC Rules and Orders.

2.6 N-1 Query. The parties agree to adhere to applicable FCC Rules and Orders governing LNP N-1 queries.

2.7 Porting of Reserved Numbers and Suspended Lines. Customers of each Party may port numbers, via LNP, that are in a denied state or that are on suspend status. In addition, Customers of each Party may port reserved numbers that the Customer has paid to reserve. Portable reserved numbers are identified on the Customer Service Record (CSR). In anticipation of porting from one Party to the other Party, a Party's subscriber may reserve additional telephone numbers and

include them with the numbers that are subsequently ported to the other Party. It is not necessary to restore a denied number before it is ported.

2.8 Splitting of Number Groups. If blocks of subscriber numbers (including, but not limited to, Direct Inward Dial (DID) numbers and MultiServ groups) are split in connection with an LNP request, the Parties shall permit such splitting. AT&T and NuVox shall offer number portability to customers for any portion of an existing block of DID numbers without being required to port the entire block of numbers. AT&T and NuVox shall permit end-users who port a portion of DID numbers to retain DID service on the remaining portion of numbers. If a Party requests porting a range of DID numbers smaller than a whole block, that Party shall pay the applicable charges for doing so as set forth in Attachment 2 of this Agreement. In the event a rate is not available then the Parties shall negotiate a rate for such services.

2.9 The Parties will set LRN unconditional or 10-digit triggers where applicable. Where triggers are set, the porting Party will remove the ported number at the same time the trigger is removed.

2.10 A trigger order is a service order issued in advance of the porting of a number. A trigger order 1) initiates call queries to the AIN SS7 network in advance of the number being ported, and 2) provides for the new service provider to be in control of when a number ports.

2.11 Where triggers are not set, the Parties shall coordinate the porting of the number between service providers so as to minimize service interruptions to the customer.

2.12 AT&T and NuVox will work cooperatively to implement changes to LNP process flows ordered by the FCC or as recommended by standard industry forums addressing LNP.

3. OSS RATES

3.1 The terms, conditions and rates for OSS are as set forth in the Pricing Schedule.

Attachment 6

Pre-Ordering, Ordering, Provisioning, Maintenance and Repair

TABLE OF CONTENTS

1. QUALITY OF PRE-ORDERING, ORDERING, PROVISIONING, MAINTENANCE AND REPAIR.....3

2. ACCESS TO OPERATIONS SUPPORT SYSTEMS 4

3. MISCELLANEOUS 17

PRE-ORDERING, ORDERING, PROVISIONING, MAINTENANCE AND REPAIR

1. QUALITY OF PRE-ORDERING, ORDERING, PROVISIONING, MAINTENANCE AND REPAIR

1.1 Nondiscriminatory Access. AT&T shall provide to NuVox access to its Operations Support Systems (OSS) and the necessary information contained therein in order that NuVox can perform the functions of pre-ordering, ordering, provisioning, maintenance–and repair, and billing in accordance with FCC and Commission rules and orders. Detailed guidelines for ordering and pre-ordering are set forth in the Local Ordering Handbook (LOH) on the AT&T CLEC Online website, https://clec.att.com/clec/. Except where otherwise required by Commission order, where practicable, AT&T will notify NuVox of changes to ordering, preordering, provisioning, maintenance and repair, and billing interfaces and business rules via the appropriate AT&T web site thirty (30) calendar days prior to such changes. In addition, AT&T will provide such notices via e-mail for up to ten (10) addresses specified by NuVox. NuVox should contact its Senior Contract Account Manager (SrCAM) to establish this capability.

1.2 Regular Working Hours/Overtime. For purposes of this Agreement, AT&T's regular working hours for provisioning are defined as follows:

Monday – Friday – 8:00 a.m. – 5:00 p.m. (Excluding Holidays)
(Resale/UNE non-coordinated, coordinated orders and order coordinated-time specific)

Saturday - 8:00 a.m. – 5:00 p.m. (Excluding Holidays)
(Resale/UNE non-coordinated orders)

1.2.1 The above hours represent the hours, either Eastern or Central Time, of the location where the customer is located and the physical work associated with providing service to that customer is being performed.

1.2.2 To the extent NuVox requests provisioning of service to be performed outside AT&T's regular working hours, or the work so requested requires AT&T's technicians or Project Manager to work outside of regular working hours, overtime billing charges pursuant to Section A2.3.15 of AT&T's General Subscriber Services Tariff for the applicable state shall apply. Notwithstanding the foregoing, if such work is performed outside of regular working hours by a AT&T technician or Project Manager during his or her scheduled shift and AT&T does not incur any overtime charges in performing the work on behalf of NuVox, AT&T will not assess NuVox additional charges beyond the rates and charges specified in this Agreement.

1.3 NuVox and AT&T will utilize standard industry formats and data elements developed by the Alliance for Telecommunications Industry Solutions ("ATIS"), including without limitation to the Ordering and Billing Forum ("OBF") ("ATIS and its associated committees"). Where standard industry formats and data elements are not developed by ATIS and its associated committees, NuVox and AT&T may cooperatively work to pursue their development through these industry standards organizations. For non-industry standard changes that will affect systems within the scope of the Change Management/Control Process (changes that affect external users of AT&T's OSS interfaces and associated manual processes and documentation) to the extent NuVox elects to address such changes NuVox will use the CMP/CCP located at the CLEC Online website to address the specific requirements. When an ATIS and its associated committees' standard or format is subsequently adopted, the Parties will utilize the CMP/CCP located at the CLEC Online website to determine how to transition the implementation of the ATIS and its associated committees' standard or format.

2. ACCESS TO OPERATIONS SUPPORT SYSTEMS

2.1 Interfaces. AT&T shall provide NuVox access to OSS functions for pre-ordering, ordering, provisioning, maintenance and repair, and billing. AT&T shall provide access to the OSS through manual and/or electronic interfaces as described in this Attachment. It is the sole responsibility of NuVox to obtain the technical capability to access and utilize AT&T's OSS interfaces. Specifications for NuVox's access and use of AT&T's electronic interfaces are set forth on the CLEC Online website (Universal Requirements Matrix) and are incorporated herein by reference.

2.2 For each OSS system training class offered by AT&T, AT&T shall make available one free seat per year. Job aids for updates to such OSS training information are available to NuVox on the AT&T CLEC Online website.

2.2.1 Prior to initial live access to interface functionality and subject to mutual agreement, the Parties shall conduct cooperative testing which will allow for the testing of the systems, interfaces, and processes for the OSS functions as defined in AT&T's OSS Interconnection Procedures available on the AT&T CLEC Online website.

2.2.2 Each AT&T interface shall be available, except for maintenance, emergency repair and scheduled downtime necessary for situations such as systems upgrades and applications releases as indicated in the OSS Hours of Operation on the CLEC Online website, except as modified through Accessible Letters, and is incorporated herein by reference twenty-four (24) hours a day, seven (7) days a week.

2.2.2.1 AT&T will provide a minimum of fifteen (15) calendar days advanced notice of any scheduled maintenance and scheduled downtime outside the regularly scheduled system downtime. Maintenance shall normally be scheduled when systems experience minimum usage. Downtime for emergency repair (Type 1 System Outage) will be given within fifteen (15) minutes of when it is known via email and web posting. Non-scheduled maintenance is defined in the BellSouth Operational Understanding located at http://wholesale.att.com/reference_library/guides/html/other_guides.html as additional activity by AT&T during a normal repair/alarm process that would require immediate maintenance action to prevent further service degradation or service interruption. This then would not lend itself to a scheduled maintenance interval or customer notification and AT&T would employ the same process as AT&T would use for its customers.

2.3 Single Point of Contact/Blanket LOA**.** NuVox will be the single point of contact with AT&T for ordering activity for network elements and other services used by NuVox to provide services to its customers, except that AT&T may accept a request directly from another CLEC, or AT&T, acting with authorization of the affected customers. NuVox and AT&T shall each execute a blanket letter of authorization with respect to customer requests so that prior proof of customer authorization will not be necessary with every request. The Parties shall each be entitled to adopt their own internal processes for verification of customer authorization for requests, provided, however, that such processes shall comply with applicable FCC and Commission rules and orders.

2.4 Batch Transmission. Upon request, AT&T shall provide NuVox with pre-order information in batch transmission to the extent AT&T makes it available or provides it to any other Telecommunications Carrier on the same terms and conditions and at the same rates.

2.5 Pre-Ordering. In accordance with FCC and Commission rules and orders, AT&T will provide electronic access to its OSS and the information contained therein in order that NuVox can perform the following pre-ordering functions: service address validation, telephone number selection, service and feature availability, due date information, customer record information and loop makeup information. Customer record information includes any and all customer specific information which will be provided as set forth in the Customer Service Record (CSR) Job Aid and Parsed Customer Service (PCSR) Job Aid, which is accessible via the Internet on the CLEC Online website. Access to customer record information will be provided through the CLEC OSS interfaces.

2.5.1 AT&T shall provide electronic access to current and accurate CSR information in accordance with the AT&T LOH which is accessible via the Internet on the CLEC Online website. The response interval and average response time will be as required by SQM OSS.

2.5.2 Parsing. AT&T shall provide parsed CSR information as set forth in AT&T's Customer Service Record (CSR) Job Aid and Parsed Customer Service (PCSR) Job Aid which is accessible via the Internet on the CLEC Online web site.

2.5.3 AT&T shall provide NuVox with nondiscriminatory access to the loop qualification information that is available to AT&T, so that NuVox can make an independent judgment about whether the loop is capable of supporting the advanced services equipment that NuVox intends to install. Loop qualification information is defined as information, such as the composition of the loop material, including but not limited to: fiber optics or copper; the existence, location and type of any electronic or other equipment on the loop, including but not limited to, digital loop carrier or other remote concentration devices, feeder/distribution interfaces, bridge taps, load coils, pair-gain devices, the loop length, including the length and location of each type of transmission media; the wire gauge(s) of the loop; and the electrical parameters of the loop, which may determine the suitability of the loop for various technologies.

2.5.4 Subject to the same exclusions that apply to AT&T's delivery of CSRs, NuVox shall use commercially reasonable efforts to provide to AT&T access to CSRs within forty-eight (48) hours of a valid request, exclusive of Saturdays, Sundays and Holidays.

2.5.5 The Parties agree not to view, copy, or otherwise obtain access to the CSR information of any customer without that customer's permission. The Parties will obtain access to CSR information only in strict compliance with applicable laws, rules, or regulations of the state in which the service is provided.

2.5.5.1 LOA Request. Either Party may request that the other provide a copy of an appropriate LOA. The Parties shall use best efforts to provide such a copy within seven (7) business days.

2.5.5.2 Notice of Noncompliance. If, after receipt of a requested LOA, the requesting Party determines that the other Party has accessed CSR information without having obtained the proper end user authorization, or, if no LOA is provided by the seventh (7th) business day after such request has been made, the requesting Party will send written notice to the other Party by email to all notice recipients designated in the General Terms and Conditions specifying the alleged noncompliance.

2.5.5.3 Disputes over Alleged Noncompliance. In its written notice to the other Party (with an additional copy to be sent by email to all notice recipients designated in the General Terms and Conditions), the alleging Party may state that additional applications for service may be refused, that any pending orders for service may not be completed, and/or that access to ordering systems may be suspended if such use is not corrected or ceased by the fifth (5th) calendar day following the date of the notice. In addition, the alleging Party may, at the same time, provide written notice (with an additional copy to be sent by email to all notice recipients

designated in the General Terms and Conditions) to the person designated by the other Party to receive notices of noncompliance that the alleging Party may terminate the provision of access to ordering systems to the other Party and may discontinue the provisioning of existing services if such use is not corrected or ceased by the tenth (10th) calendar day following the date of the initial notice. AT&T will not invoke any remedy specified in this Section unless its allegations pertain to systemic rather than isolated instances of unauthorized access to CSR information and unless it first provided notice to the Commission of its intent to impose such remedies .If the other Party disagrees with the alleging Party's allegations of unauthorized use, the alleging Party shall not invoke any remedy specified in this paragraph and shall instead proceed pursuant to the dispute resolution provisions set forth in the General Terms and Conditions. All such information obtained through the process set forth in this Section 2.5.5 shall be deemed Information covered by the Proprietary and Confidential Information Section in the General Terms and Conditions of this Agreement.

2.6 Service Ordering and Provisioning. AT&T will provide the capability to place orders electronically and/or manually. NuVox can determine if orders can be placed electronically for a certain product by reviewing the LOH found on the CLEC Online website. Electronic ordering will be made available via a single interface for ordering and pre-ordering or the integration of a pre-ordering and ordering interface. NuVox may integrate the EDI interface with the EDI pre-ordering interface or the TAG ordering interface with the TAG pre-ordering interface. In addition, AT&T will provide integrated pre-ordering and ordering capability through the LENS interface for non-complex and certain complex resale service requests and certain network element requests. Facsimile and e-mail shall not be considered electronic interfaces. If at any time such interfaces are not available to make placement of an electronic local service request (LSR) possible, NuVox shall use the manual LSR process for the ordering of all services and network elements and any combination thereof. Such manual LSRs must be submitted via facsimile except when pre-arranged with AT&T to mail manual LSRs of over one hundred (100) pages. In the case of outages of AT&T's OSS interfaces, NuVox will be assessed the lower electronically submitted OSS rate if NuVox must submit LSRs manually during periods of systems outages by complying with the rules specified in the LOH located on the CLEC Online. Additionally, NuVox will be assessed the lower electronically submitted OSS rate if a product or service that is electronically orderable by AT&T's retail unit is not orderable electronically by a CLEC. AT&T will make available the CLEC OSS ordering interface for the purpose of exchanging order information, including CLEC Service Order Tracking System (CSOTS) order status and completion notification, for non-complex and certain resale requests, certain network elements and network element combinations.

2.6.1 Interconnection trunking will be ordered via an ASR and shall be billed in accordance with Attachment 3.

2.6.2 NuVox may submit, and AT&T will accept, orders for services and network elements as per the reasonable and nondiscriminatory requirements contained in the AT&T LOH located on the CLEC Online website. Notice of changes or additions to ordering procedures resulting from new Services and Elements shall be provided to NuVox through AT&T's Accessible Letters which can be accessed at AT&T's CLEC Online website.

2.6.3 Upon receipt of an order for a conversion, from a AT&T customer to a CLEC with either UNE or Resale services, AT&T will: (i) process disconnect and reconnect orders, if necessary, to provision the service which shall be due-dated using the reasonable and nondiscriminatory interval guidelines set forth in the AT&T Southeast Region Interval Guide which is accessible via the Internet at the CLEC Online website, (ii) where applicable reuse the service facility for retail, resale service, or individual loop(s) and/or port(s) at the same location, and (iii) notify NuVox subsequent to the order being completed.

2.6.4 NuVox will specify on each order its Desired Due Date (DDD) for completion of that particular order. AT&T shall assign a due date which shall be the later of the date for the interval specified in the AT&T Southeast Region Interval Guide, located in the CLEC Online website, or NuVox's DDD. AT&T shall not complete the provisioning for that order prior to due date unless early turn-up is needed for testing purposes or NuVox otherwise consents to such early turn-up and order completion. AT&T will make best effort to meet the due date for service requests. AT&T will notify NuVox if the due date cannot be met and shall assign the earliest due date possible. When the DDD is less than the standard interval, NuVox shall use the expedite request field on the order. If NuVox requests that an order be expedited, AT&T shall notify NuVox of the status of the order and the due date which shall be (1) for a non-designed order, (a) the expedite date, (b) the earliest date it can be worked after the expedite date or (c) the standard date, or (2) for an UNE order, (a) the expedite date or (b) the standard date as the DD, with the return of the Firm Order Confirmation (FOC) within the interval required by SQM O-9. Service date advancement charges shall be as set-forth in the Pricing Schedule.

2.6.5 Service Date Advancement Charges (a.k.a. Expedites). For Service Date Advancement requests by NuVox, Service Date Advancement charges will apply for intervals less than the standard interval as outlined in AT&T Southeast Region Interval Guide, located on the CLEC Online website. The charges shall be as set-forth in the Pricing Schedule and will apply only where Service Date Advancement has been specifically requested by the requesting Party, and the element or service provided by the other Party meets all technical specifications and is provisioned to meet those technical specifications. If NuVox accepts service on the plant test date (PTD) normal recurring charges will apply from that date but Service Date Advancement charges will only apply if NuVox previously requested the order to be expedited and the expedited DD is the same as the original PTD.

2.6.6 Missed Due Dates. In the case of a missed due date, the Parties shall work cooperatively to complete the order as soon as possible. In the event that a missed due date is one associated with a Service Date Advancement request, Service Date Advancement charges will not apply if AT&T fails to complete the order prior to the standard interval or a negotiated interval. When the missed due date is the fault of NuVox or its customer, subsequent order processing fees will apply. When it is an AT&T error, subsequent order processing fees will not apply.

2.6.7 Cancellation Charges. If either Party cancels a request for network elements or other services, any costs incurred by the provisioning Party in conjunction with the provisioning of that request will be recovered in accordance with AT&T's Private Line Tariff Section B2.4.14 or AT&T's FCC No. 1 Tariff, Section 5.4, as applicable. Notwithstanding the foregoing, if NuVox places an LSR based upon AT&T's loop makeup information, and such information is inaccurate resulting in the inability of AT&T to provision the network elements or services requested and another compatible facility cannot be found with the transmission characteristics of the network elements or services originally requested, cancellation charges described in this Section shall not apply. Where NuVox places a single LSR for multiple network elements or services based upon loop makeup information, and information as to some, but not all, of the network elements or services is inaccurate, if AT&T cannot provision the network elements or services that were the subject of the inaccurate loop makeup information, NuVox may cancel its request for those network elements or services without incurring cancellation charges as described in this Section. In such instance, should NuVox elect to cancel the entire LSR, cancellation charges as described in this Section shall apply to those elements and services that were not the subject of inaccurate loop makeup. Notwithstanding the foregoing, if NuVox places a single LSR for an unbundled network combination, as described in Section 5 of Attachment 2 of this Agreement, based upon AT&T's loop makeup information, and such information is inaccurate resulting in the inability of AT&T to provision the network elements requested in accordance with the transmission characteristics of the network elements requested, cancellation charges described in this Section shall not apply.

2.6.8 Resale Service Orders. Resale service orders shall be available per the AT&T LOH which can be found at AT&T's CLEC Online website.

2.6.8.1 AT&T shall not require a disconnect order from an customer, NuVox, or another CLEC in order to process a NuVox order for a Resale service available under Attachment 1 to this Agreement.

2.6.9 FOCs, Completion Notices, Jeopardies and DLRs. AT&T shall provide to NuVox electronic and manual interfaces for transmitting orders and receiving FOCs, Completion Notices (for electronically submitted orders only, for manual orders completions can be viewed in CSOTS), Jeopardies, Design Layout Records, Rejections and, as available, other provisioning data and information. AT&T shall provide NuVox with a FOC for each Resale and UNE order. The

information provided on the FOC will be as described in the Product Information Packages and AT&T's CLEC Online website.

2.6.9.1 AT&T shall provide to NuVox a FOC within time periods as specified by SQM O-9. For a LSR in the states of Alabama, Georgia, Kentucky, Louisiana, Mississippi, and South Carolina, after the FOC is sent the order will be sent for a review of available facilities. If a facility jeopardy is found it is posted on the Pending Facilities (PF) Report found on the PMAP website located at http://pmap.wholesale.att.com/. The order is then sent to the Service Advocacy Center/Outside Plant Engineering group to seek out alternative facilities and if none are found to create a work order to provide relief. Once alternative facilities are found or facilities are cleared/installed the order is cleared for completion. The process is the same for the LSRs submitted in the states of Florida, North Carolina and Tennessee where the available facilities are reviewed prior to returning the FOC.

2.6.10 Rejections/Errors. AT&T shall reject and return to NuVox any local service request that AT&T cannot provision due to technical reasons or due to missing, inaccurate or illegible information. When a LSR is rejected, AT&T shall, in its reject notification, specifically identify and describe, using specified error codes and additional written explanation where necessary, the reasons for which the LSR was rejected. AT&T will always use best efforts to identify all errors and any need for clarification before rejecting the LSR to NuVox, and to avoid serial requests for LSR correction or clarification. AT&T will not be able to check for potential dependency conditions created by new data on a clarified request that might cause a serial error when the new data is inputted.

2.6.10.1 AT&T will identify errors in accordance with AT&T's LSR error messages documentation, which contains error codes applicable to a LSR and a description of the errors such codes identify. AT&T will make available such documentation on AT&T's CLEC Online website. AT&T will work cooperatively with NuVox as reasonably necessary to assist NuVox in identifying and understanding LSR errors and associated error codes. Supplemental written explanation of the reasons for the reject will be included, as necessary to pinpoint the error or need for clarification and to prevent the need for serial correction and/or clarification.

2.6.10.2 If a LSR is rejected more than once for error or clarification, no additional supplemental order charges shall apply.

2.6.11 Due dates cannot be considered confirmed until a complete and accurate Service Request has been entered into AT&T's service request processing systems. A due date may be adjusted for an order that has been rejected for error or clarification. Serial requests for correction and/or clarification may also trigger a new due date. When a due date is impacted by an invalid clarification by AT&T, at NuVox's request, AT&T will make a best effort to honor the due date measured from the

original submission of the complete and accurate service request or give the next available date.

2.6.12 Service Request Changes (Supplemental Service Requests). If an installation or other NuVox requested work requires a change from the original NuVox service request in any manner while the AT&T technician is onsite, AT&T shall notify the appropriate NuVox ordering center designated in advance of performing the installation or other work to obtain authorization. AT&T shall then provide NuVox an estimate of additional labor hours or materials. After all installation or other work is completed, AT&T shall immediately notify the NuVox ordering center that approved the supplemental service request(s) of the actual labor hours or materials used.

2.6.12.1 If provisioning of a service request can only be partially completed due to unavailable facilities, AT&T shall notify NuVox in accordance with the pending facilities procedures set forth in Section 2.6.14 below.

2.6.12.2 If NuVox's customer requests a service change at the time of installation or other service visit performed by AT&T technicians, AT&T shall immediately notify NuVox at the telephone number on the service order of that request. The AT&T technician should notify NuVox in the presence of the NuVox customer and provide an estimate of additional labor hours or materials needed so that NuVox can negotiate authority to install the requested service directly with that customer and the technician and revise appropriate ordering documents as necessary. At no time should the AT&T representative perform any work not ordered by NuVox, even at the customer's request, without approval from the NuVox ordering center. After all installation or other work is completed, AT&T shall immediately notify NuVox of the actual labor hours or materials used to the NuVox ordering center that authorized the supplemental service request(s).

2.6.13 Pending Facility Situations. AT&T shall provide to NuVox notification of any known facility jeopardy situations when they occur via the password protected PF Report on the PMAP website. When AT&T is able to provide a new committed due date, AT&T shall provide NuVox a FOC containing the new due date if the date is later than the original due date on a nondiscriminatory basis with itself and other CLECs.

2.6.14 Status. AT&T shall provision Resale Services and UNEs as prescribed in NuVox's service order requests. Access to FOC status on electronically submitted orders and other status states for electronically and manually submitted orders shall be provided via CSOTS located at http://wholesale.att.com/applications/. Access to FOC status on manually submitted service order requests shall be provided on AT&T's PMAP website.

2.6.15 Lack of Facilities Notice. AT&T shall provide notice of a lack of facilities availability in accordance with SQM P-2.

2.6.16 Orders placed in hold or pending status by NuVox will be held for a maximum of thirty (30) calendar days from the date the order is placed on hold. After such time, NuVox shall be required to submit a new service request. Incorrect or invalid requests returned to NuVox for correction or clarification will be held for thirty (30) calendar days. If NuVox does not return a corrected request within thirty (30) calendar days, AT&T will cancel the request.

2.6.17 Testing. AT&T shall perform all pre-testing necessary to ensure the services ordered meet the specifications outlined in the technical reference for the service being ordered. Such tests will include all of the tests that AT&T would perform for the turnup of its own service. Upon request, AT&T shall provide NuVox with the results from all tests when available.

2.6.18 NuVox and AT&T will perform cooperative testing, if requested by NuVox, to test Services and Elements purchased by NuVox where AT&T performs cooperative testing on like services for it's retail entity. At a minimum, cooperative testing performed will include margin, attenuation and insertion loss tests. In situations where a requested test is not normally performed by AT&T to provision a circuit, Additional Cooperative Acceptance Testing ("ACAT") charges will apply in accordance with Section 13.3.5 of AT&T's FCC Tariff 1. In situations where a requested test is not normally performed by AT&T to address a trouble ticket on a circuit, Additional Cooperative Acceptance Testing ("ACAT") charges will apply in accordance with Section 13.3.5 of AT&T's FCC Tariff 1.

2.6.19 Both Parties shall work cooperatively if required to isolate and clear troubles that cannot be isolated to a particular Party's network.

2.6.20 For maintenance issues, AT&T will perform testing with the issuance of a trouble report identifying a possible trouble condition in AT&T's network. AT&T will perform intrusive testing during the periods authorized by NuVox on the trouble report. Where feasible, AT&T shall perform electronic loop tests at NuVox's request. AT&T shall provide NuVox with the results from all tests when available. In situations where a requested test is not normally performed by AT&T to provision a circuit, ACAT charges will apply. If the trouble is found in AT&T's network through the performance of the ACAT testing no ACAT charges will be charged.

2.6.21 Tag and Locate. AT&T must properly and physically tag and locate all circuits, if ordered by NuVox, regardless of provisioning method employed by AT&T. In cases where AT&T would not otherwise dispatch to provision a circuit, and NuVox requests Tagging, NuVox will incur the Loop Tagging charges set forth in the Pricing Schedule.

2.6.22 Suspend/Restore Orders. Upon NuVox's request through a Suspend/Restore Order, AT&T shall suspend or restore the functionality of any Services and Elements provided pursuant to this Agreement.

2.6.23 Unless otherwise ordered by NuVox, when NuVox orders services and network elements pursuant to this Agreement, all preassigned trunk or telephone numbers currently associated with those services and network elements shall be retained without loss of switched based features where such features exist. NuVox shall be responsible for ensuring that associated functions (e.g., entries to databases and 911/E911 capability) are properly ordered or retained on the service request.

2.6.24 Completion Notification. Upon completion of a service request submitted electronically, and once AT&T's systems determine that the service order is completed, AT&T shall submit to NuVox, via the same electronic interface used to submit the LSR, a completion notification that complies with the OBF/LSOG business rules and ATIS models, as adopted by the CCP. Completion information for local service requests submitted both manually and electronically is available via AT&T's web-based system known as CSOTS.

2.6.25 Subject to the same exclusions that apply to AT&T's delivery of a FOC, NuVox shall use commercially reasonable efforts to return a FOC to AT&T, for purposes of porting a number for noncomplex orders, within forty-eight (48) hours exclusive of Saturdays, Sundays and Holidays, after NuVox's receipt from AT&T of a valid LSR**.**

2.6.26 Subject to the same exclusions that apply to AT&T's delivery of a Reject Response, NuVox shall use commercially reasonable efforts to provide a Reject Response to AT&T, for noncomplex orders, within forty-eight (48) hours, exclusive of Saturdays, Sundays and Holidays, after AT&T's submission of an LSR which is incomplete or incorrectly formatted.

2.7 Maintenance and Repair. NuVox may report and monitor service troubles and obtain repair services from AT&T via electronic interfaces. AT&T provides several options for electronic trouble reporting and monitoring, including, but not limited to CPSS-TA and the following interfaces. For exchange services, AT&T offers NuVox nondiscriminatory access to the Trouble Analysis Facilitation Interface (TAFI). In addition, AT&T offers an industry standard, machine-to-machine Electronic Communications Trouble Administration (ECTA) Gateway interface. For designed services, AT&T provides nondiscriminatory trouble reporting via the ECTA Gateway. AT&T provides NuVox an estimated time to repair, as appropriate, on trouble reports. Requests for trouble repair are billed in accordance with the provisions of this Agreement. AT&T service technicians provide to NuVox and its customers repair service that is nondiscriminatory in relation to that provided to AT&T and its customers and shall receive response time priority that is at least equal to that of AT&T and its similarly situated customers. AT&T will employ the Telecommunications Service Priority (TSP) System in its restoration of National Security and Emergency Preparedness (NS/EP) telecommunications services.

2.7.1 AT&T and NuVox agree to adhere to the BellSouth Operational Understanding Guide located at http://wholesale.att.com/reference_library/guides/html/other_guides.html. For services provided through resale, AT&T agrees to provide NuVox with scheduled maintenance for residence and small business customers consistent with the BellSouth Operational Understanding Guide. AT&T agrees to provide NuVox notification of Central Office conversions consistent with the BellSouth Operational Understanding Guide.

2.7.2 Maintenance charges for premises visits by AT&T technicians shall be billed by NuVox to its customer, and not by AT&T. The AT&T technician shall: (i) contact NuVox for authorization; (ii) provide an estimate of time and materials required to NuVox; and (iii) notify NuVox if a subsequent visit is required. If additional premises work is required that cannot be performed on that visit, AT&T shall call NuVox to schedule another premises visit. Wherever possible, AT&T will schedule appointments while a technician is at the premises with the customer on the line so that NuVox can schedule a new appointment with AT&T and customer at the same time.

2.7.2.1 AT&T will bill maintenance charges for premises visits to NuVox in accordance with the provisions of this Attachment.

2.7.3 When maintenance charges are incurred during premises visits, the AT&T technician shall present the customer with a copy of a nonbranded warranty page that has the order number or trouble ticket number and date on it. If additional work will be necessary, AT&T shall make an additional appointment with NuVox's customer.

2.7.4 AT&T shall provide NuVox with access to a user interface which is functionally equivalent to the interface used by AT&T's retail maintenance and repair centers for processing trouble reports. Such functionality shall be that described in the corresponding documentation located on the AT&T CLEC web site at http://wholesale.att.com/reference_library/guides/html/lens_tafi.html.

2.7.5 AT&T supports the machine-to-machine maintenance and repair interface defined by the ANSI National Standards (T1.227, T1.228 and T1.262). Upon completion of a Joint Implementation Agreement ("JIA") with AT&T, NuVox shall have access to this interface. The functionality of this interface shall be that described in the corresponding documentation published on the AT&T CLEC web site at http://wholesale.att.com/reference_library/guides/activation/assets/pdf/clec_jia.pdf. A sample JIA is also available at this site.

2.7.5.1 In addition to systems and interfaces currently available, AT&T may provide NuVox access to other maintenance and repair interfaces (as the result of the CCP or other stimuli) whose functionality matches the corresponding documentation published on the AT&T Wholesale – Southeast Region website at http://wholesale.att.com/ under the Applications Section under the Local Section

of the website. Such interfaces shall not replace current interfaces prior to being addressed through CCP.

2.7.6 AT&T shall make every reasonable effort to notify NuVox upon completion of a trouble report. AT&T will close out trouble reports in accordance with SQM M&R-3.

2.7.7 NuVox may enter a trouble report with AT&T when a central office feature or function is not performing. If NuVox's circuit/telephone number that is in trouble is riding a trunk that belongs to another carrier, NuVox can submit a central office features trouble report if the circuit/telephone number has switch translations on it.

2.7.8 AT&T shall advise NuVox of known central office, interoffice (such as fiber cuts), and repeater failures that are known at the time of trouble report issuance. AT&T shall notify NuVox of switch failures pursuant to the Disaster Recovery Plan in Attachment 10 of this Agreement if applicable. NuVox will also be notified of FCC reportable events after having subscribed to the CLEC email list server in accordance with the BellSouth Operational Understanding Guide. AT&T agrees to provide an Estimated Time To Repair (ETTR), an appointment time or commitment time, as appropriate, on all trouble reports. The Parties are responsible for making best efforts to provide prompt verbal notification to each other of significant outages or operations problems which affect the Collocation Space or Premises, to the extent it affects the Collocation Space with an estimated clearing time for restoration, if known. In addition, each Party will provide notification as soon as reasonably practical.

2.7.9 AT&T will call the NuVox maintenance and repair center with notification in the event that a AT&T maintenance and repair technician is unable to keep a scheduled repair visit within the same time frames AT&T provides such notice to itself, its own customers, its affiliates and to any other CLEC. If a scheduled repair visit is missed, NuVox may escalate to AT&T for expedited repair and a revised estimated completion time.

2.7.9.1 Repair appointments missed due to AT&T's fault are subject to the SQM M&R-1.

2.7.10 Chronic Problems. Chronic repair problems will receive specialized handling by AT&T's Customer Wholesale Interconnection Network Services ("CWINS") Maintenance Center Chronic Group personnel. AT&T performs maintenance analysis for chronic problems by reviewing historical trouble tickets. The chronic resolution process is for a network element, service or facility on which three (3) or more trouble tickets have been closed in a thirty (30) calendar day period, obscure or intermittent conditions or upon reasonable request by NuVox. If the analysis indicates a chronic condition exists, a chronic maintenance report will be initiated.

2.7.10.1 The Chronic Group will then perform a detailed analysis of the chronic maintenance report. The chronic resolution process could involve the following:

- Request for service release times
- Circuit monitoring
- Circuit stress testing
- Joint NuVox/AT&T testing
- Component repair
- Referral to NuVox for resolution

2.7.10.2 Once the chronic condition is resolved, the chronic maintenance report will be closed. If NuVox is involved in the chronic process, notification will be provided to NuVox. When NuVox determines that a chronic condition regarding a circuit or service exists, a request may be made to the CWINS Maintenance Chronic Group for review. The CWINS center will open a chronic maintenance report and perform a chronic resolution procedure. NuVox should provide any test results associated with the reported service at the time the chronic request is made.

2.7.10.3 The chronic process is not intended for resolving immediate trouble conditions. The resolution period will vary based on the complexity of isolating the problem. Immediate trouble conditions should be handled through the normal maintenance reporting process. A status will be provided on all NuVox-initiated chronic requests and will be closed with a call to NuVox's maintenance service center. Once a chronic trouble has been repaired, it remains on a monitoring list for thirty (30) calendar days to ensure the problem has been corrected. Subsequent problems with a chronic circuit are handled on the original chronic ticket, allowing the customer to work from an existing ticket rather than open a new one each time they experience errors.

2.7.10.4 NuVox can access circuit layout and design information regarding a loop through the Loop Makeup Inquiry Form in LENS and through the Design Layout Report. Such information shall include, but not be limited to, loop length, gauge of wire used, location of bridge taps, and indication of 4-wire or 2-wire loops. To the extent AT&T's installation and repair personnel have such records or information, AT&T will inform NuVox of tip/ring reversal, recent engineering changes and loop loss measurements regarding the loop**.**

2.8 Change Management. AT&T provides a collaborative process for change management of the electronic interfaces through the CCP. Guidelines for this process are set forth in the AT&T - SE CHANGE CONTROL PROCESS GUIDE which may be accessed via the Internet at http://wholesale.att.com/reference_library/processes/ccp_live/ccp_doc_bccp.html. Such CCP will provide NuVox with an opportunity to comment on proposed changes and time for AT&T to consider and modify its proposals based on those comments**.**

2.8.1 AT&T will provide advance notification prior to issuing new versions of AT&T's documentation changes, including business rule changes, as described in the process flows in Section 4.0 and in Appendix G of the http://www.interconnection.bellsouth.com/markets/lec/ccp_live/index.html/main/clec.htmlin the AT&T - SE CHANGE CONTROL PROCESS GUIDE**.**

2.9 Electronic Interfaces. AT&T's Versioning Policy is part of the CCP. Pursuant to the CCP, AT&T will issue new software releases for new industry standards for its EDI and TAG electronic interfaces. The Versioning Policy, including the appropriate notification to NuVox, is set forth in the AT&T - SE CHANGE CONTROL PROCESS GUIDE.

2.9.1 Rates. AT&T shall bill NuVox OSS rates pursuant to the terms, conditions and rates for OSS as set forth in the Pricing Schedule. NuVox shall bill AT&T a single manual OSS charge per LSR associated with the "port back" of a telephone number to AT&T as set forth in the Pricing Schedule, until such time as electronic ordering is provided by NuVox to AT&T at which time the applicable electronic OSS charge set forth in the Pricing Schedule would apply. To the extent that NuVox performs another OSS function for AT&T that AT&T performs for NuVox, the Parties shall amend this Agreement to include such function subject to the same rates, terms and conditions that apply to AT&T under this Agreement.

2.9.1.1 The electronic OSS Charges rather than the manual ordering charges shall apply to a local service request submitted by NuVox when AT&T's electronic interface normally utilized by NuVox is unavailable for reasons other than scheduled maintenance. In order to receive the electronic OSS charge NuVox must follow the procedure outlined in AT&T's LOH for every manually submitted LSR.

3. MISCELLANEOUS

3.1 Customer Migration. Neither AT&T nor NuVox shall prevent or delay a customer from migrating to another carrier because of unpaid bills, denied service, or contract terms.

3.2 Use of Facilities. When a customer of NuVox elects to discontinue service and to transfer such service to another local exchange carrier, including AT&T, AT&T shall have the right to reuse the facilities provided to NuVox by AT&T. In addition, where AT&T provides local switching, AT&T may disconnect and reuse facilities when the facility is in a denied state (*i.e.,* service is no longer being provided over the local loop but the switch translations and interoffice facilities have not been disconnected) and AT&T has received a request to establish new service or transfer service from a customer or a customer's CLEC at the same address served by the denied facility. AT&T will notify NuVox that such a request has been processed after the disconnect order has been completed. Such notification will be provided via NuVox's line loss notification report which can be found on the PMAP website and is updated on a daily basis except for Sundays.

3.3 Contact Numbers. The Parties agree to provide one another with toll-free (e.g., 1-800#) contact numbers for the purpose of addressing issues related to ordering, provisioning, and maintenance and repair of services. AT&T shall provide the contact number through AT&T's CLEC Online website**.** NuVox shall provide a contact number that is separate and distinct from that provide to NuVox's customers. In addition, AT&T shall provide access to assistance for technical issues other than OSS training inquiries such as connectivity and passwords related to its OSS interfaces. Such assistance will be available twenty-four (24) hours a day, seven (7) days a week via designated telephone number for inquiries and e-mail/web form (the request can be submitted either way) with guaranteed response within an hour.

3.4 Subscription Functions. In cases where AT&T performs subscription functions for an interexchange carrier (IXC) (i.e., PIC and LPIC changes via Customer Account Record Exchange (CARE)), AT&T will provide the affected IXCs with the Operating Company Number (OCN) of the local provider for the purpose of obtaining customer billing account and other customer information required under subscription requirements.

3.5 Service Arrangement Reconfiguration. AT&T shall reconfigure (company initiated activity (CIA) or central office conversion) the NuVox service arrangements of NuVox's customer for Resale services, customer or custom UNEs or Combinations in accordance with the FCC's rules regarding Notice of Network Change, 47 C.F.R. 51.325 *et seq*. as well as the procedures described in the BellSouth Operational Understanding Guide provided such reconfigurations and procedures comply with applicable FCC and Commission rules and orders. This provision shall not allow AT&T to change the type of service ordered by NuVox (i.e. Resale, UNE or Combination) to another type of service as a result of such reconfiguration.

3.6 Intercept Referral Messages. The Parties shall provide an intercept referral message for the same period of time that AT&T currently provides such a message for its own customers. The intercept message shall be similar in format to the intercept referral message currently provided by AT&T for its own customers.

3.7 Installation/Service Visits/Additional Work. Each Party shall train and direct its employees who have contact with customers of the other Party in the process of provisioning, maintenance or repair not to disparage the other Party or its services in any way to the other Party's customers.

3.7.1 Any written "leave behind" materials that AT&T technicians provide to NuVox customers shall be non-branded materials that do not identify the work being performed as being by AT&T. These materials shall include, without limitation, non-branded forms for the Customer and non-branded "not at home" cards.

3.8 Escalation Procedures and Contacts. AT&T's escalation practices are provided in Appendix A and the escalation contact number list is contained in Chapter 4.0 of the BellSouth Operational Understanding Guide.

3.9 Disputes Between NuVox and NuVox's Customers. In general, AT&T will not become involved in disputes between NuVox and NuVox's customers. If a dispute does arise that cannot be settled without the involvement of AT&T, NuVox shall contact the designated Service Center for assistance in the dispute resolution. AT&T will make reasonable efforts to assist NuVox in as timely a manner as possible. AT&T's involvement will be limited to interfacing with NuVox's employees who are involved in the dispute resolution.

3.10 AT&T shall constantly work toward resolution of pre-ordering, ordering, provisioning, maintenance and repair, billing and interface issues and disputes. NuVox must contact the appropriate AT&T work center to record NuVox's issue/dispute and to work with the personnel within the center to reach final resolution. Should NuVox determine that escalation is required to reach resolution, NuVox should invoke the process appropriate for that work center as spelled out in the BellSouth Operational Understanding for provisioning including project management, maintenance and repair; Section 8.0 of the Change Control Process located at http://wholesale.att.com/reference_library/processes/ccp_live/ccp_doc_bccp.html for interfaces and in Section 2 of Attachment 7 of this Agreement for billing.

3.11 The Parties will support existing NC/NCI codes to deliver the services available through this Agreement, and necessary to support all technically feasible means and levels of interconnection. The Parties will support the development of new NC/NCI codes to the extent a NC/NCI code does not exist for services available through this Agreement.

3.12 Project Management. Provisioning done pursuant to project management as specified in the AT&T Southeast Region Interval Guide, located at https://ebiznet.sbc.com/standardduedates/se/, will be performed at the interval the Parties negotiated and mutually agreed to prior to the order being placed. AT&T will offer the shortest interval available.

3.13 Provisioning done pursuant to project management as specified in the AT&T Southeast Region Interval Guide will be normally be performed by project management personnel from the provisioning center. Provisioning will be performed at prices no more expensive than those prices applicable to individual service or element orders, unless NuVox negotiated to obtain project management support from AT&T's Professional Services Group rather use the project management personnel from the provisioning center.

3.14 Personnel assigned by either Party to provisioning being handled on a Project Management basis shall be professional, competent, responsive and effective.

Both Parties will use best efforts to resolve any problems with Project Management personnel, practices or procedures on a timely basis and in accordance with the escalation procedures set forth in this Attachment 6.

3.15 Continued Support of Elements or Services No Longer Offered. AT&T shall continue to support and facilitate the use of elements and services purchased by NuVox during a reasonable period of transition, and in accordance with applicable FCC and Commission rules and orders, and any applicable tariff terms. The Parties will work cooperatively and proactively to mutually agree on a seamless transition plan to alternative service arrangements.

3.16 Annoyance Call Center. Where AT&T provides switching, AT&T will process calls made to its Annoyance Call Center and will advise NuVox when it is determined that annoyance calls are originated from one of their customer's locations. It is the responsibility of NuVox to take the corrective action necessary up to and including the disconnection of service to its customers who make annoying calls. AT&T shall provide the same level of Annoyance Call Center service to NuVox's customers as AT&T provides to its own customers.

Attachment 7

Billing

TABLE OF CONTENTS

1. PAYMENT AND BILLING ARRANGEMENTS 3

2. BILLING DISPUTES 10

3. COOPERATION IN SUPPLYING BILLING INFORMATION 12

4. RAO HOSTING 12

5. UNBILLABLE REVENUE (CMDS/ADUF/ODUF/EODUF).....15

6. OPTIONAL DAILY USAGE FILE 17

7. ACCESS DAILY USAGE FILE 19

8. ENHANCED OPTIONAL DAILY USAGE FILE (EODUF).....21

AT&T Credit Application.……....Exhibit A

BAR Form...……..……..…….Exhibit B

BILLING

1. PAYMENT AND BILLING ARRANGEMENTS

The terms and conditions set forth in this Attachment shall apply to all services ordered and provisioned pursuant to this Agreement.

1.1 Billing. AT&T will bill through the Carrier Access Billing System (CABS), Integrated Billing System (IBS) and/or the Customer Records Information System (CRIS) depending on the particular service(s) provided to NuVox under this Agreement. AT&T will format all bills in Carrier Billing Output Specification (CBOS) Standard or CLUB/EDI format, depending on the type of service provided. For those services where standards have not yet been developed, BellSouth's billing format will change to comply with standards that are finalized by the applicable industry forum.

1.1.1 For any service(s) AT&T receives from NuVox, NuVox shall continue to bill AT&T in the same format and using the same media as it did, and to the extent any services were provided, prior to this Agreement. Any changes to format or media used will be pursuant to the mutual agreement of NuVox and BellSouth.

1.1.2 AT&T bills will include sufficient itemization and bill detail to identify the particular elements or services provided. AT&T shall provide NuVox a monthly bill that includes all charges incurred by and credits and/or adjustments due to NuVox for those elements or services ordered, established, utilized, discontinued or performed pursuant to this Agreement. Each bill shall set forth the quantity and description of each such element or service billed to NuVox, including USOCs and similar information, where applicable. All charges billed to NuVox must indicate the state from which such charges were incurred except in cross boundary state situations. A listing of such cross boundary exchanges is set forth in BellSouth's state specific GSST Section A3 where the serving state will be indicated.

1.1.3 The Bill Date, as defined herein, must be present on each bill transmitted by one Party to the other Party and must be a valid calendar date. Subject to Section 32.3 of the General Terms and Conditions of this Agreement, charges incurred under this Agreement, including back billing and billing disputes, are subject to a one (1) year limitations period. However, both Parties recognize that situations exist which may necessitate billing beyond one (1) year and to the extent not bound by the applicable limitations period. These exceptions are:

> Charges connected with jointly provided services whereby meet point billing guidelines require either party to rely on records provided by a third party and such records have not been provided in a timely manner;

Charges incorrectly billed due to erroneous information supplied by the non-billing Party.

1.1.4 Any switched access charges associated with interexchange carrier access to the local exchange lines resold under Attachment 1 to this Agreement will be billed by, and due to BellSouth.

1.1.5 AT&T will render bills each month for lines on established bill days for each of NuVox's accounts. Where feasible, AT&T shall offer to render bills in electronic format. For any other billing media formats, AT&T will offer to provide them so long as AT&T supports their generation. If NuVox requests multiple billing media or additional copies of the bills, AT&T will provide these at an additional cost as described in FCC Tariff 1 Section 13.3.6.3. To the extent NuVox supports the medium requested, additional copies of bills will be provided to AT&T upon request from AT&T at an additional cost equal to that which AT&T would impose upon NuVox.

1.1.6 AT&T will bill NuVox in advance for all services to be provided during the ensuing billing period except charges associated with service usage and nonrecurring charges, which will be billed in arrears.

1.1.6.1 For resold services provided under Attachment 1 to this Agreement, charges will be calculated on an individual customer account level, including, if applicable, any charge for usage or usage allowances. AT&T will also bill NuVox, and NuVox will be responsible for and remit to BellSouth, all charges applicable to resold services including but not limited to 911 and E911 charges, customer common line charges, federal subscriber line charges, telecommunications relay charges (TRS), and franchise fees, unless otherwise ordered by a Commission.

1.1.7 Except as otherwise forth in this Agreement, neither Party will perform billing and collection services for the other Party or the other Party's Affiliates solely as a result of the execution of this Agreement.

1.1.8 In the event that this Agreement or an amendment to this Agreement effects a rate change to recurring rate elements that are billed in advance, AT&T will make an adjustment to such recurring rates billed in advance and at the previously effective rate. The adjustment shall reflect billing at the new rates from the Effective Date of the Agreement or amendment.

1.2 Establishing Accounts. After submitting an AT&T Credit Application and deposit, if required under Section 1.8, and receiving certification as a local exchange carrier from the appropriate regulatory agency, NuVox will provide the appropriate AT&T Advisory Team/Local Contract Manager the necessary documentation to enable AT&T to establish accounts for Local Interconnection, Network Elements and Other Services, Collocation and/or resold services. Such documentation shall include the Application for Master Account, if applicable,

proof of authority to provide telecommunications services, the appropriate Company Code (CC) or Operating Company Number (OCN) for each state as assigned by the National Exchange Carriers Association (NECA), Carrier Identification Code (CIC), Access Customer Name and Abbreviation (ACNA), Blanket Letter of Authorization ("LOA"), Misdirected Number form, and a tax exemption certificate, if applicable. Notwithstanding anything to the contrary in this Agreement, NuVox may not order services under a new account established in accordance with this Section 1.2 until thirty (30) calendar days after all information specified in this Section 1.2 is received from NuVox. Notwithstanding the foregoing, this Section shall have no impact on NuVox in a state, if NuVox already has established accounts with AT&T in that state including the overall CC or OCN if NuVox is operating in more than one (1) state.

1.2.1 Upon request from NuVox, AT&T shall provide its ACNA, CIC, OCN, and Tax Exemption Letter to establish an account for the purpose of NuVox billing to BellSouth. AT&T will provide a LOA to NuVox upon the execution of this Agreement. Notwithstanding the foregoing, this Section shall have no impact on BellSouth, if AT&T already has established accounts with NuVox.

1.2.2 OCN, CC, CIC, ACNA and BAN Changes. Except to the extent otherwise agreed to in a separate agreement between the Parties, if NuVox needs to change its ACNA(s)/BAN(s)/CC(s)/CIC(s)/OCN(s) under which it operates when NuVox has already been conducting business utilizing that ACNA(s)/BAN(s)/CC(s)/CIC(s)/OCN(s), NuVox shall bear all costs incurred by AT&T to convert NuVox to the new ACNA(s)/BAN(s)/CC(s)/CIC(s)/OCN(s). Such ACNA/BAN/CC/CIC/OCN conversion charges include the time required to make system updates to all of NuVox's customer records and will be handled by the BFR/NBR process.

1.3 Payment Responsibility. Subject to the provisions of Section 1 of this Attachment, each Party shall be responsible for and make payment for all charges billed. Payments made by each Party to the other Party as payment on an account will be credited to the billed Party's accounts receivable master account. Neither Party will become involved in billing disputes that may arise between the other Party and its customers.

1.4 Payment Due. Payment for services should be due on or before the next bill date (Payment Due Date) in immediately available funds. However, AT&T should submit bills for mailing such that, under normal circumstances, bill delivery may be expected at least fifteen (15) days prior to Payment Due Date.

1.4.1 If the payment due date falls on a Sunday or on a Holiday that is observed on a Monday, the payment due date shall be the first non-Holiday day following such Sunday or Holiday. If the payment due date falls on a Saturday or on a Holiday

which is observed on Tuesday, Wednesday, Thursday, or Friday, the payment due date shall be the last non-Holiday day preceding such Saturday or Holiday. If payment is not received by the payment due date, a late payment charge, as set forth in Section 1.6, below, shall apply.

1.5 Tax Exemption. Upon BellSouth's receipt of a tax exemption certificate, the total amount billed to NuVox will not include those taxes or fees from which NuVox is exempt. NuVox will be solely responsible for the computation, tracking, reporting and payment of all taxes and like fees associated with the services provided to the customer of NuVox.

1.6 Late Payment. Subject to the provisions of Section 1.7 below, if any portion of the payment is received by AT&T after the payment due date as set forth in Section 1.4 above, or if any portion of the payment is received by AT&T in funds that are not immediately available to BellSouth, then a late payment charge shall be due to BellSouth. The late payment charge shall be the portion of the payment not received by the payment due date multiplied by a late factor and will be applied on a per bill basis. The late factor shall be as set forth in Section A2 of the GSST, Section B2 of the Private Line Service Tariff or Section E2 of the Interstate Access Tariff, as appropriate. In addition to any applicable late payment charges, NuVox may be charged a fee for all returned checks as set forth in Section A2 of the GSST or pursuant to the applicable state law.

1.7 Suspension or Termination of Services. The procedures for suspension or termination of services are as follows:

1.7.1 Except as otherwise provided for in specific provisions of this Agreement that address suspension or termination of services, each Party reserves the right to suspend or terminate service in the event of prohibited, unlawful or, in the case of resold services, improper use of the other Party's facilities or service (e.g. making calls in a manner reasonably to be expected to frighten, abuse, torment or harass another, etc.) as described under the providing Party's tariff, abuse of the other Party's facilities, or any violation or noncompliance with this Agreement and/or each Party's tariffs, where applicable. Upon detection of such use, the detecting Party will provide written notice to the other Party that additional applications for service may be refused, that any pending orders for service may not be completed, and/or that access to ordering systems may be suspended if such use is not corrected or ceased by the fifteenth (15th) calendar day following the date of the notice. In addition, the detecting Party may, at the same time, provide written notice to the person designated by the other Party to receive notices of noncompliance that the detecting Party may terminate the provision of existing services to the other Party if such use is not corrected or ceased by the thirtieth (30th) calendar day following the date of the initial notice. Notwithstanding the foregoing, if the Party that receives the notice disagrees with the issuing Party's allegations, it shall provide written notice to the issuing Party stating the reasons

therefore. Upon delivery of such notice of dispute, the foregoing provisions regarding suspension and termination will be stayed, and the Parties shall work in good faith to resolve any dispute over such allegations and/or the action to be taken. If the Parties are unable to resolve such dispute amicably, the issuing Party shall proceed, if at all, pursuant to the dispute resolution provisions set forth in the General Terms and Conditions.

1.7.2 AT&T reserves the right to suspend or terminate service for nonpayment. If payment of amounts not subject to a billing dispute, as described in Section 2, is not received by the bill date in the month after the original bill date, AT&T will provide written notice to NuVox that additional applications for service may be refused, that any pending orders for service may not be completed, and/or that access to ordering systems may be suspended if payment of such amounts, and all other amounts not in dispute that become past due subsequent to the issuance of the written notice ("Additional Amounts Owned"), is not received by the fifteenth (15th) calendar day following the date of the notice. In addition, AT&T may, at the same time, provide written notice that AT&T may discontinue the provision of existing services to NuVox if payment of such amounts, and all other Additional Amounts Owed that become past due subsequent to the issuance of the written notice, is not received by the thirtieth (30th) calendar day following the date of the initial notice. If a CLEC receives a notice of suspension or termination from AT&T as a result of CLEC's failure to pay timely, CLEC should be required to pay all undisputed amounts that are past due as of the date of the pending suspension or termination action. Upon request, AT&T will provide information to NuVox of the Additional Amounts Owed that must be paid prior to the time periods set forth in the written notice to avoid suspension of access to ordering systems or discontinuance of the provision of existing services as set forth in the initial written notice.

1.7.3 In the case of termination of services, all billed charges, as well as applicable termination charges, shall become due provided, however, if there are any disputed charges at the time of termination, the Parties will continue to pursue the resolution of the dispute. In the event that the Parties are unable to resolve the dispute, it will be resolved using the dispute resolution process.

1.7.4 The Parties will comply with the applicable FCC and Commission rules and orders relating to suspension, discontinuance and termination of service. Upon termination of service on the billed Party's account, such service to billed Party's customers will be denied. The billed Party is solely responsible for notifying the customers of the proposed disconnection of the service**.** The billing Party will reestablish service for the billed Party upon payment of all past due charges and the appropriate connection fee subject to the billing Party's normal application procedures.

1.7.5 Notices of suspension or termination of service will be delivered to the appropriate billing contact and/or address at the billed Party, as well as to the notice contacts specified in the General Terms and Conditions.

1.8 Deposit Policy. AT&T reserves the right to secure the accounts of new CLECs (entities with no existing relationship with AT&T for the purchase of wholesale services as of the Effective Date) and existing CLECs (entities with an existing relationship with AT&T for the purchase of wholesale services as of the Effective Date) with a suitable form of security pursuant to this Section. NuVox may satisfy the requirements of this Section through the presentation of a payment guarantee with terms acceptable to AT&T executed by a company with a credit rating of greater than or equal to 5A1. Upon request, NuVox shall complete an AT&T Credit Application attached hereto as Exhibit A.

1.8.1 With the exception of new CLECs with a D&B credit rating equal to 5A1, AT&T may secure the accounts of all new CLECs consistent with the terms set forth in subsection 1.8.2. Further, if NuVox has filed for bankruptcy protection within twelve (12) months prior to the Effective Date of this Agreement, AT&T may treat NuVox, for purposes of establishing security on its accounts, as a new CLEC as set forth in subsection 1.8.5.

1.8.2 The security required by AT&T shall take the form of cash, an Irrevocable Letter of Credit (AT&T Form or substantially similar in substantive parts to the AT&T Form), Surety Bond (AT&T Form or substantially similar in substantive parts to the AT&T Form).

1.8.3 The amount of the security shall not exceed two (2) month's estimated billing for new CLECs or actual billing for existing CLECs. Interest shall accrue per the appropriate AT&T tariff on cash deposits.

1.8.4 Any such security shall in no way release NuVox from its obligation to make complete and timely payments of its bills, subject to the bill dispute procedures set forth in Section 2.

1.8.5 AT&T may secure the accounts of existing CLECs where an existing CLEC does not meet the following factors:

1.8.5.1 NuVox must have a good payment history, based upon the preceding twelve (12) month period. A good payment history shall mean that less than 10% of the non-disputed receivable balance is received over thirty (30) calendar days past the Due Date.

1.8.5.2 The existing CLEC's liquidity status, based upon a review of EBITDA, is EBITDA positive for the prior four (4) quarters of financials (at least one of which must be an audited financial report) excluding any nonrecurring charges or special restructuring charges.

1.8.5.3 If the existing CLEC has a current bond rating, such CLEC must have a bond rating of BBB or above or the existing CLEC has a current bond rating between CCC and BB and meets the following criteria for the last Fiscal Year End and for the prior four (4) quarters of reported financials:

1.8.5.3.1 Free cash flow positive;

1.8.5.3.2 Positive tangible net worth; and

1.8.5.3.3 Debt/tangible net worth rating of 2.5 or better.

1.8.6 Subject to Section 1.8.7 following, in the event NuVox fails to remit to AT&T any deposit requested pursuant to this Section within thirty (30) calendar days of NuVox's receipt of such request, service to NuVox may be terminated in accordance with the terms of Section 1.7 and subtending sections of this Attachment, and any security deposits will be applied to NuVox's account(s).

1.8.7 The Parties will work together to determine the need for or amount of a reasonable deposit. If the Parties are unable to agree on a request for additional amounts or a deposit refund, either Party may file a petition for resolution of the dispute and both Parties shall cooperatively seek expedited resolution of such dispute. During the pendency of such a proceeding, the Commission may, with reasonable discretion, require posting of a bond for 50% of the disputed amount during the pendency of the proceeding.

1.8.8 At any such time as the provision of services to NuVox is terminated pursuant to Section 1.7, the amount of the deposit will be credited against NuVox's account(s) and any credit balance that may remain will be refunded immediately.

1.8.9 Subject to a standard of commercial reasonableness, if a material change in the circumstances of NuVox so warrants and/or gross monthly billing has increased more than 25% beyond the level most recently used to determine the level of security deposit, AT&T reserves the right to request additional security subject to the criteria set forth herein this Section 1.8.

1.8.10 AT&T shall refund, release or return any security, including all accrued interest, if any, within thirty (30) calendar days of its determination that such security is no longer required by the terms of this Section 1.8 or within thirty (30) calendar days of NuVox establishing that it satisfies the standards set forth in Section 1.8.5. NuVox may make the requisite showing in a letter directed to the Notices recipients set forth in the General Terms and Conditions of this Agreement. NuVox shall attach supporting financial reports to such letter and such documents shall be accorded confidential treatment, in accordance with Section 12 of the General Terms and Conditions, unless such documents are otherwise publicly available.

1.9 Notices. All bills and notices regarding billing matters, including notices relating to security deposits, suspension or termination of services, and rejection of additional orders shall be forwarded to the billing contacts and/or addresses designated by each Party in the establishment of its billing accounts.

1.9.1 Upon request of NuVox, BellSouth's Initial Notice to NuVox that additional applications for service may be refused, that any pending orders for service may not be completed, and/or that access to ordering systems may be suspended if payment of such amounts, and all other amounts not in dispute that become past due before refusal, incompletion or suspension, is not received by the fifteenth (15th) calendar day following the date of the notice will be supplied to NuVox's billing contact and to the individual(s) listed in the Notices provision of the General Terms and Conditions of this Agreement (such notice sent to the individual(s) listed in the Notices provision of the General Terms and Conditions of this Agreement shall be provided as a stand-alone document and shall not be accompanied by bills that may be generated concurrently with the notice, unless such individual(s) also serves as a billing contact). NuVox shall notify BellSouth's billing department of any changes to the Notices contact(s). Notices of security deposits and termination of services also shall be sent via certified mail to the individual(s) listed in the Notices provision of the General Terms and Conditions of this Agreement. Such notices must be sent in accordance with the time frames set forth in Section 1.7.

1.10 Rates. Rates for Optional Daily Usage File (ODUF), Access Daily Usage File (ADUF), Enhanced Optional Daily Usage File (EODUF) and Centralized Message Distribution Service (CMDS) are set out in the Pricing Schedule. If no rate is identified in this Attachment, the rate for the specific service or function will be as set forth in applicable AT&T tariff or as negotiated by the Parties upon request by either Party.

2. BILLING DISPUTES

2.1 Each Party agrees to notify the other Party in writing electronically upon the discovery of a billing dispute. Each Party shall report all billing disputes to the other Party using either the Mass Dispute spreadsheet format for multiple disputes or the Billing Adjustment Request (BAR) form attached hereto as Exhibit B.

2.1.1 Confirmation of the receipt of a dispute filed via the BAR form or multiple disputes filed via the Mass Dispute spreadsheet format will be sent by the billing Party to the disputing Party via the same medium used in filing the dispute(s). An automatic response will be provided for those filed electronically and a response will be provided within three (3) business days for those filed via fax. Both Parties will use the Claim Number inserted on the BAR or the Mass Dispute spreadsheet format as the indicator of the appropriate dispute in question.

2.1.2 All Valid Disputes, as defined in Section 2.3 below, shall be posted so as to remove disputed amounts from the collections process prior to that process being initiated.

2.1.3 Upon request by either Party, the other Party will provide a spreadsheet containing a current list of open disputes along with the requesting Party's audit/claim number listed on the BAR form, the requesting Party's audit/claim number that is assigned to the dispute, and the disputed dollar amount. The Parties shall engage in mutually agreed upon meetings, no less frequent than quarterly, if requested by either Party, to discuss the status of the open disputes. If the billed Party disagrees with the resolution of the dispute by the billing Party, the Parties agree to use the existing escalation procedures between the Parties to resolve the dispute. If the Parties are unable to resolve the dispute through escalation, either Party may initiate the dispute resolution process.

2.1.4 To the extent necessary in order to resolve billing disputes, the Parties shall engage in face-to-face meetings no more frequently than every six (6) months, unless otherwise mutually agreed by the Parties, for the purpose of resolving billing disputes. Unless otherwise mutually agreed upon by the Parties the meeting shall be held at a mutually convenient time at a AT&T location, selected by BellSouth, to which NuVox agrees to travel at its expense.

2.1.5 In the event of a billing dispute, the Parties will endeavor to resolve the dispute within sixty (60) calendar days of the notification date. AT&T has provided a contact name and escalation spreadsheet by appropriate center based upon service type of the dispute in the AT&T CLEC Online website at http://wholesale.att.com/tools_forms_and_reports/forms/assets/pdf/escalation_list .pdf to assist in this effort. If the Parties are unable within the sixty (60) calendar day period to reach resolution, then the unresolved dispute will be resolved in accordance with the dispute resolution provisions in the General Terms and Conditions of this Agreement.

2.2 For purposes of this Section, a billing dispute means a reported dispute of a specific amount of money actually billed by either Party. The dispute must be clearly explained by the disputing Party and, to the extent possible, supported by relevant, written documentation (including e.g. reference to or copies of the relevant bill pages), which clearly shows the basis for disputing charges (Valid Dispute). Examples of written document considered relevant include, but are not limited to: the number of minutes the disputing Party believes were properly and improperly billed, the rate the disputing Party believes was erroneously applied and that which it believes was applicable, the factor the disputing Party believes was erroneously applied and that which it believes was applicable, etc. All reasonable requests for additional relevant information made by one Party to another shall be honored. The billed Party may withhold payment of such disputed amounts but late payment charges and interest will be assessed per

Section 2.4 below, pending resolution of the dispute. These late payment charges must be disputed until the initial dispute is resolved. Claims by the billed Party for damages of any kind will not be considered a billing dispute for purposes of this Section. If the billing dispute is resolved in favor of the billing Party, the disputing Party will make payment of any of the disputed amount owed to the billing Party within thirty (30) calendar days. If the billing dispute is resolved in favor of the billed Party, any credits due to the billed Party, pursuant to the billing dispute, will be applied to the billed Party's account by the billing Party within thirty (30) calendar days.

2.3 If a Party disputes a charge and does not pay such charge by the payment due date, or if a payment or any portion of a payment is received by either Party after the payment due date, or if a payment or any portion of a payment is received in funds which are not immediately available to the other Party, then a late payment charge–where applicable, shall be assessed. Such late payment charge shall be calculated in accordance with Section 1.6. There will be no late payment charges on disputed amounts, if the withholding Party prevails in the billing dispute.

3. COOPERATION IN SUPPLYING BILLING INFORMATION

3.1 AT&T shall cooperate with and provide all information reasonably requested by NuVox to aid in the accurate and timely billing of access and reciprocal compensation (including compensation for ISP-bound traffic) to AT&T and any third party carriers, including AT&T Affiliates.

4. RAO HOSTING

4.1 Remote Accounting Office ("RAO") Hosting, Calling Card and Third Number Settlement System (CATS) and Non-Intercompany Settlement System (NICS) services provided to NuVox by AT&T will be in accordance with the methods and practices regularly applied by AT&T to its own operations during the term of this Agreement, including such revisions as may be made from time to time by AT&T and for which AT&T will provide NuVox with thirty (30) calendar days' advanced notice of such revisions.

4.2 NuVox shall furnish all relevant information required by AT&T for the provision of RAO Hosting, CATS and NICS.

4.3 Charges or credits, as applicable, will be applied by AT&T to NuVox on a monthly basis in arrears. Amounts due (excluding adjustments) are payable within thirty (30) calendar days of receipt of the billing statement.

4.4 NuVox must have its own unique hosted RAO code. Where AT&T is the selected CMDS interfacing host, NuVox must request that AT&T establish a unique hosted RAO code for NuVox. Such request shall be in writing to the AT&TRAO Hosting coordinator and must be submitted at least eight (8) weeks

prior to provision of services pursuant to this Section. Services shall commence on a date mutually agreed by the Parties.

4.5 AT&T will receive messages from NuVox that are to be processed by BellSouth, another LEC in the AT&T region or a LEC outside the AT&T region. NuVox shall send all messages to AT&T no later than sixty (60) calendar days after the message date.

4.6 AT&T will perform invoice sequence checking, standard EMI format editing, and balancing of message data with the EMI trailer record counts on all data received from NuVox.

4.7 All data received from NuVox that is to be processed or billed by another LEC within the AT&T region will be distributed to that LEC in accordance with the Agreement(s) in effect between AT&T and the involved LEC.

4.8 All data received from NuVox that is to be placed on the CMDS network for distribution outside the AT&T region will be handled in accordance with the agreement(s) in effect between AT&T and its connecting contractor.

4.9 AT&T will receive messages from the CMDS network that are destined to be processed by NuVox and will forward them to NuVox on a daily basis for processing.

4.10 Transmission of message data between AT&T and NuVox will be via CONNECT:Direct or CONNECT:Enterprise Client utilizing secure File Transfer Protocol (FTP).

4.10.1 Data circuits (private line or dial-up) will be required between AT&T and NuVox for the purpose of data transmission when utilizing CONNECT:Direct. Where a dedicated line is required, NuVox will be responsible for ordering the circuit and coordinating the installation with BellSouth. NuVox will also be responsible for any charges associated with this line. CSU/DSU equipment required on the AT&T end to attach the line to the mainframe computer and to transmit data will be the responsibility of NuVox. Where a dial-up facility is required, dial circuits will be installed in the AT&T data center by AT&T and the associated charges assessed to NuVox. Additionally, all message toll charges associated with the use of the dial circuit by NuVox will be the responsibility of NuVox. Associated equipment on the AT&T end, including a modem, will be the responsibility of BellSouth. All equipment, including modems and software, that is required on the NuVox end for the purpose of data transmission will be the responsibility of NuVox.

4.10.2 If NuVox utilizes CONNECT:Enterprise Client for data file transmission, purchase of the CONNECT:Enterprise Client software will be the responsibility of NuVox.

4.11 All messages and related data exchanged between AT&T and NuVox will be formatted for EMI formatted records and packed between appropriate EMI header and trailer records in accordance with accepted industry standards.

4.12 NuVox will maintain recorded message detail necessary to recreate files provided to AT&T for a period of three (3) calendar months beyond the related message dates.

4.13 Should it become necessary for NuVox to send data to AT&T more than sixty (60) calendar days past the message date(s), NuVox will notify AT&T in advance of the transmission of the data. AT&T will work with its connecting contractor and/or NuVox, where necessary, to notify all affected LECs.

4.14 Should an error be detected by the EMI format edits performed by AT&T on data received from NuVox, the entire pack containing the affected data will not be processed by BellSouth. AT&T will notify NuVox of the error. NuVox will correct the error(s) and will resend the entire pack to AT&T for processing. In the event that an out-of-sequence condition occurs on subsequent packs, NuVox will resend these packs to AT&T after the pack containing the error has been successfully reprocessed by BellSouth.

4.15 In association with message distribution service, AT&T will provide NuVox with associated intercompany settlements reports (CATS and NICS) as appropriate.

4.16 Notwithstanding anything in this Agreement to the contrary, in no case shall either Party be liable to the other for any direct or consequential damages incurred as a result of the obligations set out in this Section.

4.17 RAO Compensation

4.17.1 Rates for message distribution service provided by AT&T for NuVox are set forth in the Pricing Schedule.

4.17.2 Rates for data transmission associated with message distribution service are set forth in the Pricing Schedule.

4.18 Intercompany Settlements Messages

4.18.1 Intercompany Settlements Messages facilitate the settlement of revenues associated with traffic originated from or billed by NuVox as a facilities based provider of local exchange telecommunications services outside the AT&T region. Only traffic that originates in one Bell operating territory and bills in another Bell operating territory is included. Traffic that originates and bills within the same Bell operating territory will be settled on a local basis between NuVox and the involved company(ies), unless that company is participating in NICS.

4.18.2 Both traffic that originates outside the AT&T region by NuVox and is billed within the AT&T region, and traffic that originates within the AT&T region and is billed outside the AT&T region by NuVox, is covered by CATS. Also covered is traffic that either is originated by or billed by NuVox, involves a company other than NuVox, qualifies for inclusion in the CATS settlement, and is not originated or billed within the AT&T region (NICS).

4.18.3 Once NuVox is operating within the AT&T territory, revenues associated with calls originated and billed within the AT&T region will be settled via NICS.

4.18.4 AT&T will receive the monthly NICS reports from Telcordia on behalf of NuVox. AT&T will distribute copies of these reports to NuVox on a monthly basis.

4.18.5 AT&T will receive the monthly CATS reports from Telcordia on behalf of NuVox. AT&T will distribute copies of these reports to NuVox on a monthly basis.

4.18.6 AT&T will collect the revenue earned by NuVox from the Bell operating company in whose territory the messages are billed via CATS, less a per message billing and collection fee of five cents ($0.05), on behalf of NuVox. AT&T will remit the revenue billed by NuVox to the Bell operating company in whose territory the messages originated, less a per message billing and collection fee of five cents ($0.05), on behalf on NuVox. These two amounts will be netted together by AT&T and the resulting charge or credit issued to NuVox monthly via a monthly Carrier Access Billing System (CABS) miscellaneous bill.

4.18.7 AT&T will collect the revenue earned by NuVox within the AT&T territory from another CLEC also within the AT&T territory (NICS) where the messages are billed, less a per message billing and collection fee of five cents ($0.05), on behalf of NuVox. AT&T will remit the revenue billed by NuVox within the AT&T region to the CLEC also within the AT&T region, where the messages originated, less a per message billing and collection fee of five cents ($0.05). These two amounts will be netted together by AT&T and the resulting charge or credit issued to NuVox monthly via a monthly CABS miscellaneous bill.

4.18.8 AT&T and NuVox agree that monthly netted amounts of less than fifty dollars ($50.00) will not be settled.

5. UNBILLABLE REVENUE (CMDS/ADUF/ODUF/EODUF)

5.1 Recording Failure(s)

5.1.1 When AT&T carries or switches calls and loses or fails to make a recording, regardless of whether NuVox or AT&T are performing the billing function,

AT&T shall notify NuVox of the amount of estimated NuVox unbillable revenue in accordance with Section 5.3. AT&T shall compensate NuVox for this unbillable revenue within three (3) bill periods. Such compensation shall be net of revenue AT&T demonstrates it would have received for services provided to NuVox, if any, but for which AT&T could not render bills as a result of any recording loss(es).

5.1.2 The term "unbillable" refers to a message or service that cannot be billed to the correct NuVox customer.

5.2 **Lost, Damaged, or Destroyed Message Data**

5.2.1 When NuVox message data is lost, damaged, or destroyed as a result of AT&T error or omission, including but not limited to, the acts or omissions of AT&T employees, agents and suppliers, and the failures of AT&T hardware, software and other AT&T equipment, when AT&T is performing the billing and/or recording function, and the data cannot be recovered or resupplied within two (2) bill periods, AT&T shall notify NuVox of the estimated amount of NuVox unbillable revenue in accordance with Section 5.3. AT&T shall compensate NuVox for this unbillable revenue within three (3) bill periods.

5.2.2 When NuVox message data is lost, damaged, or destroyed as a result of AT&T error or omission, including but not limited to, the acts or omissions of AT&T employees, agents and suppliers, and the failures of AT&T hardware, software and other AT&T equipment, when NuVox is performing the billing and/or recording function, and the data cannot be recovered or resupplied within two (2) bill periods, AT&T shall notify NuVox of the estimated amount of NuVox unbillable revenue in accordance with Section 5.3 of this Attachment. AT&T shall compensate NuVox for the net loss to NuVox within three (3) bill periods.

5.3 **Determination of Losses**

5.3.1 Material Loss. AT&T shall review its daily controls to determine if data has been lost. The message threshold (5000 (this is the number of messages on the switch for all carriers including inter and intraLATA as well as Local) messages within the missing data period) used by AT&T to determine if there has been a material loss of its own messages will also be used to determine if a material loss of NuVox's messages has occurred. A nonmaterial loss will not be reported and any unbillable revenues will not be credited to NuVox. When it is known that there has been a material loss, actual message and minute volumes should be reported if possible. Where actual data is not available, a full day shall be estimated for the recording entity as outlined in the Section 5.3.1.1 below. The loss is then determined by subtracting recorded data, if any is available, from the estimated total day's business.

5.3.1.1 Estimated Volumes. From message and minute volume reports for the entity experiencing the loss, AT&T shall secure message/minute counts for the corresponding day of the week for eight (8) weeks preceding the week in which the loss occurred. AT&T shall apply the appropriate Average Revenue Per Message (ARPM) to the estimated message volume to arrive at the estimated lost revenue.

5.3.2 Complete Loss. Estimated message and minute volumes for each loss consisting of an entire/tape or file lost in transit, lost after receipt, degaussed before processing, received blank or unreadable, etc. shall be reported. Also the loss of one or more boxes of operator tickets shall be estimated and reported if applicable.

5.3.3 AT&T shall notify NuVox in advance of the date of monthly billing statement that shall contain such adjustments. AT&T shall provide sufficient information to allow NuVox to analyze the data supporting BellSouth's estimate of revenue due to NuVox.

6. OPTIONAL DAILY USAGE FILE

6.1 Upon written request from NuVox, AT&T will provide the Optional Daily Usage File (ODUF) service to NuVox pursuant to the terms and conditions set forth in this Section.

6.2 NuVox shall furnish all relevant information required by AT&T for the provision of the ODUF.

6.3 The ODUF feed will contain messages that were carried over the AT&T Network and processed in the AT&T Billing System, but billed to a NuVox customer.

6.4 Charges for the ODUF will appear on NuVox's monthly bills for the previous month's usage. The charges are as set forth in the Pricing Schedule. NuVox will be billed at the ODUF rates that are in effect at the end of the previous month.

6.5 The ODUF feed will contain both rated and unrated messages. All messages will be in the standard Alliance for Telecommunications Industry Solutions (ATIS) EMI record format.

6.6 Messages that error in the billing system of NuVox will be the responsibility of NuVox. If, however, NuVox should encounter significant volumes of errored messages that prevent processing by NuVox within its systems, AT&T will work with NuVox to determine the source of the errors and the appropriate resolution. Upon request from NuVox, AT&T shall resend errored messages in accordance with SQM B-9.

6.7 The following specifications shall apply to the ODUF feed.

6.7.1 **ODUF Messages to be Transmitted**

6.7.1.1 The following messages recorded by AT&T will be transmitted to NuVox:

6.7.1.1.1 Message recording for per use/per activation type services (examples: Three -Way Calling, Verify, Interrupt, Call Return, etc.)

6.7.1.1.2 Measured Local

6.7.1.1.3 Directory Assistance messages

6.7.1.1.4 IntraLATA Toll

6.7.1.1.5 WATS and 800 Service

6.7.1.1.6 N11

6.7.1.1.7 Information Service Provider Messages

6.7.1.1.8 Operator Services Messages

6.7.1.1.9 Operator Services Message Attempted Calls (Network Element only)

6.7.1.1.10 Credit/Cancel Records

6.7.1.1.11 Usage for Voice Mail Message Service

6.7.1.2 Rated Incollects (messages AT&T receives from other revenue accounting offices) can also be on ODUF. Rated Incollects will be intermingled with AT&T recorded rated and unrated usage. Rated Incollects will not be packed separately.

6.7.1.3 AT&T will perform duplicate record checks on records processed to ODUF. Any duplicate messages detected will be deleted and not sent to NuVox.

6.7.1.4 In the event that NuVox detects a duplicate on ODUF they receive from BellSouth, NuVox will drop the duplicate message and will not return the duplicate to BellSouth.

6.7.2 **ODUF Physical File Characteristics**

6.7.2.1 ODUF will be distributed to NuVox via CONNECT:Direct, CONNECT:Enterprise Client or another mutually agreed medium. The ODUF feed will be a variable block format. The data on the ODUF feed will be in a non-compacted EMI format (175 byte format plus modules). It will be created on a daily basis Monday through Friday except holidays. Details such as dataset name and delivery schedule will be addressed during negotiations of the distribution medium. There will be a maximum of one dataset per workday per OCN.

6.7.2.2 Data circuits (private line or dial-up) will be required between AT&T and NuVox for the purpose of data transmission as set forth in Section 4.10.1 above.

6.7.2.3 If NuVox utilizes CONNECT:Enterprise Client for data file transmission, purchase of the CONNECT:Enterprise Client software will be the responsibility of NuVox.

6.7.3 **ODUF Packing Specifications**

6.7.3.1 A pack will contain a minimum of one message record or a maximum of 99,999 message records plus a pack header record and a pack trailer record. One transmission can contain a maximum of ninety-nine (99) packs and a minimum of one (1) pack.

6.7.3.2 The OCN, From RAO, and Invoice Number will control the invoice sequencing. The From RAO will be used to identify to NuVox which AT&TRAO that is sending the message. AT&T and NuVox will use the invoice sequencing to control data exchange. AT&T will be notified of sequence failures identified by NuVox and resend the data as quickly as technically possible.

6.7.3.3 The data will be packed using ATIS EMI records.

6.7.4 **ODUF Pack Rejection**

6.7.4.1 NuVox will notify AT&T within one (1) business day of rejected packs (via the mutually agreed medium). Packs could be rejected because of pack sequencing discrepancies or a critical edit failure on the Pack Header or Pack Trailer records (i.e. out-of-balance condition on grand totals, invalid data populated). Standard ATIS EMI error codes will be used. NuVox will not be required to return the

actual rejected data to BellSouth. Rejected packs will be corrected and retransmitted to NuVox by BellSouth.

6.7.5 **ODUF Control Data**

6.7.5.1 NuVox will send one confirmation record per pack that is received from BellSouth. This confirmation record will indicate NuVox's receipt of the pack and acceptance or rejection of the pack. Pack Status Code(s) will be populated using standard ATIS EMI error codes for packs that were rejected by NuVox for reasons stated in the above Section.

6.7.6 **ODUF Testing**

6.7.6.1 Upon request from NuVox, AT&T shall send ODUF test files to NuVox. The Parties agree to review and discuss the ODUF content and/or format. For testing of usage results, AT&T shall request that NuVox set up a production (live) file. The live test may consist of NuVox's employees making test calls for the types of services NuVox requests on ODUF. These test calls are logged by NuVox, and the logs are provided to BellSouth. These logs will be used to verify the files. Testing will be completed within thirty (30) calendar days from the date on which the initial test file was sent.

7. ACCESS DAILY USAGE FILE

7.1 Upon written request from NuVox, AT&T will provide the Access Daily Usage File (ADUF) service to NuVox pursuant to the terms and conditions set forth in this Section.

7.2 NuVox shall furnish all relevant information required by AT&T for the provision of ADUF.

7.3 ADUF will contain access messages associated with a port that NuVox has purchased from BellSouth

7.4 Charges for ADUF will appear on NuVox's monthly bills for the previous month's usage. The charges are as set forth in the Pricing Schedule. NuVox will be billed at the ADUF rates that are in effect at the end of the previous month.

7.5 Messages that error in the billing system of NuVox will be the responsibility of NuVox. If, however, NuVox should encounter significant volumes of errored messages that prevent processing by NuVox within its systems, AT&T will work with NuVox to determine the source of the errors and the appropriate resolution. Upon request from NuVox, AT&T shall resend errored messages in accordance with SQM B-9.

7.6 **ADUF Messages to be Transmitted**

7.6.1 The following messages recorded by AT&T will be transmitted to NuVox:

7.6.1.1 Recorded originating and terminating interstate and intrastate access records associated with a port.

7.6.1.2 Recorded terminating access records for undetermined jurisdiction access records associated with a port.

7.6.2 AT&T will perform duplicate record checks on records processed to ADUF. Any duplicate messages detected will be dropped and not sent to NuVox.

7.6.3 In the event that NuVox detects a duplicate on ADUF they receive from BellSouth, NuVox will drop the duplicate message and will not return the duplicate to BellSouth.

7.6.4 **ADUF Physical File Characteristics**

7.6.4.1 ADUF will be distributed to NuVox via CONNECT:Direct, CONNECT:Enterprise Client or another mutually agreed medium. The ADUF feed will be a fixed block format. The data on the ADUF feed will be in a non-compacted EMI format (210 byte). It will be created on a daily basis Monday through Friday except holidays. Details such as dataset name and delivery schedule will be addressed during negotiations of the distribution medium. There will be a maximum of one dataset per workday per OCN.

7.6.4.2 Data circuits (private line or dial-up) will be required between AT&T and NuVox for the purpose of data transmission as set forth in Section 4.10.1 above.

7.6.4.3 If NuVox utilizes CONNECT:Enterprise Client for data file transmission, purchase of the CONNECT:Enterprise Client software will be the responsibility of NuVox.

7.6.5 **ADUF Packing Specifications**

7.6.5.1 A pack will contain a minimum of one message record or a maximum of 99,999 message records plus a pack header record and a pack trailer record. One (1) transmission can contain a maximum of ninety-nine (99) packs and a minimum of one (1) pack.

7.6.5.2 The OCN, From RAO, and Invoice Number will control the invoice sequencing. The From RAO will be used to identify to NuVox which AT&TRAO is sending the message. AT&T and NuVox will use the invoice sequencing to control data exchange. AT&T will be notified of sequence failures identified by NuVox and resend the data.

7.6.5.3 The data will be packed using ATIS EMI records as quickly as technically possible

7.6.6 **ADUF Pack Rejection**

7.6.6.1 NuVox will notify AT&T within one (1) business day of rejected packs (via the mutually agreed medium). Packs could be rejected because of pack sequencing discrepancies or a critical edit failure on the Pack Header or Pack Trailer records (i.e. out-of-balance condition on grand totals, invalid data populated). Standard ATIS EMI error codes will be used. NuVox will not be required to return the actual rejected data to BellSouth. Rejected packs will be corrected and retransmitted to NuVox by BellSouth.

7.6.7 **ADUF Control Data**

7.6.7.1 NuVox will send one (1) confirmation record per pack that is received from BellSouth. This confirmation record will indicate NuVox's receipt of the pack and acceptance or rejection of the pack. Pack Status Code(s) will be populated using standard ATIS EMI error codes for packs that were rejected by NuVox for reasons stated in the above Section.

7.6.8 **ADUF Testing**

7.6.8.1 Upon request from NuVox, AT&T shall send a test file of generic data to NuVox via Connect:Direct or Text File via E-Mail. The Parties agree to review and discuss the test file's content and/or format.

8. ENHANCED OPTIONAL DAILY USAGE FILE

8.1 Upon written request from NuVox, AT&T will provide the Enhanced Optional Daily Usage File (EODUF) service to NuVox pursuant to the terms and conditions set forth in this Section. EODUF will only be sent to existing ODUF subscribers who request the EODUF option.

8.2 NuVox shall furnish all relevant information required by AT&T for the provision of the EODUF.

8.3 The EODUF will provide usage data for local calls originating from resold Flat Rate Business and Residential Lines.

8.4 Charges for delivery of the EODUF will appear on NuVox's monthly bills for the previous month's usage. The charges are as set forth in the Pricing Schedule. NuVox will be billed at the EODUF rates that are in effect at the end of the previous month.

8.5 All messages will be in the standard Alliance for Telecommunications Industry Solutions (ATIS) EMI record format.

8.6 Messages that error in the billing system of NuVox will be the responsibility of NuVox. If, however, NuVox should encounter significant volumes of errored messages that prevent processing by NuVox within its systems, AT&T will work with NuVox to determine the source of the errors and the appropriate resolution. Upon request from NuVox, AT&T shall resend errored messages in accordance with SQM B-9.

8.7 The following specifications shall apply to the EODUF feed.

8.7.1 **Usage to be Transmitted**

8.7.1.1 The following messages recorded by AT&T will be transmitted to NuVox:

8.7.1.1.1 Customer usage data for flat rated local call originating from NuVox's customer lines (1FB or 1FR). The EODUF record for flat rate messages will include:

8.7.1.1.1.1 Date of Call

8.7.1.1.1.2 From Number

8.7.1.1.1.3 To Number

8.7.1.1.1.4 Connect Time

8.7.1.1.1.5 Conversation Time

8.7.1.1.1.6 Method of Recording

8.7.1.1.1.7 From RAO

8.7.1.1.1.8 Rate Class

8.7.1.1.1.9 Message Type

8.7.1.1.1.10 Billing Indicators

8.7.1.1.1.11 Bill to Number

8.7.1.2 AT&T will perform duplicate record checks on EODUF records processed to ODUF. Any duplicate messages detected will be deleted and not sent to NuVox.

8.7.1.3 In the event that NuVox detects a duplicate on EODUF they receive from BellSouth, NuVox will drop the duplicate message (NuVox will not return the duplicate to BellSouth).

8.7.2 **Physical File Characteristics**

8.7.2.1 The EODUF feed will be distributed to NuVox over their existing ODUF feed. The EODUF messages will be intermingled among NuVox's ODUF messages. The EODUF will be a variable block format (2476) with an LRECL of 2472. The data on the EODUF will be in a non-compacted EMI format (175 byte format plus modules). It will be created on a daily basis (Monday through Friday except holidays).

8.7.2.2 Data circuits (private line or dial-up) may be required between AT&T and NuVox for the purpose of data transmission. Where a dedicated line is required, NuVox will be responsible for ordering the circuit, overseeing its installation and coordinating the installation with BellSouth. NuVox will also be responsible for any charges associated with this line. CSU/DSU equipment required on the AT&T end to attach the line to the mainframe computer and to transmit successfully ongoing will be the responsibility of NuVox. Where a dial-up facility will be required, dial circuits will be installed in the AT&T data center by AT&T and the associated charges assessed to NuVox. Additionally, all message toll charges associated with the use of the dial circuit by NuVox will be the responsibility of NuVox. Associated equipment on the AT&T end, including a modem, will be the responsibility of BellSouth. All equipment, including modems and software, that is required on NuVox's end for the purpose of data transmission will be the responsibility of NuVox.

8.7.3 **Packing Specifications**

8.7.3.1 A pack will contain a minimum of one (1) message record or a maximum of 99,999 message records plus a pack header record and a pack trailer record. One (1) transmission can contain a maximum of ninety-nine (99) packs and a minimum of one (1) pack.

8.7.3.2 The Operating Company Number (OCN), From Revenue Accounting Office (RAO), and Invoice Number will control the invoice sequencing. The From RAO will be used to identify to NuVox which AT&TRAO is sending the message. AT&T and NuVox will use the invoice sequencing to control data exchange. AT&T will be notified of sequence failures identified by NuVox and resend the data as quickly as technically possible.

8.7.3.3 The data will be packed using ATIS EMI records.

Account Executive: _____
Phone Number: (____) _____

CONFIDENTIAL CREDIT APPLICATION

RETURN VIA FAX TO 404-949-1699

Estimated monthly billing $_____
(We are unable to process without estimated monthly billing)

New customer: Yes No

Previous AT&T customer*: Yes _____

Circle States you will be doing business in: **AL AR CA CT FL GA IL IN KS KY LA**
Circle new States only if you are an existing customer **MI MO MS NC NV OH OK SC TN TX WI**

Service applying for: Local CLEC (resale) ☐ Access☐ Wireless☐ Payphone (coin) ☐ Facility Based☐ Other_____

Legal Name: _____ Date Established: _____
Trade Name (DBA): _____ Phone Number: ___(_____)_____
Physical Address: _____
Mailing address_____
City: _____ State: _____ Zip Code: _____
If Div. or Sub. Name of Parent Company: _____
City: _____ State: _____ Phone Number: _____(_____)_____

CHECK ONE: ☐ Corporation ☐ Partnership ☐ Sole Proprietor ☐ LLC, LP, LLP
State(s) of incorporation: _____Company Web Site_____ Tax ID # _____

NAMES OF PRINCIPAL OFFICERS, PARTNERS, OWNERS:

Name: _____ **SS# _____
Phone: (_____)_____ Address: _____
Name: _____ **SS# _____
Phone: (_____)_____ Address: _____
Credit Contact: _____Phone: _____(_____)E MAIL_____

BANK REFERENCE:

Primary Bank: _____ Phone # (_____)_____
Address: _____ Acct # _____
Loan Officer: _____ Fax #_____

TRADE REFERENCES:

1. Name: _____ Phone # (_____)_____
Address: _____ Fax# _____
2. Name: _____ Phone # (_____)_____
Address: _____ Fax# _____
3. Name: _____ Phone # (_____)_____
Address: _____ Fax# _____

CREDIT RELEASE:

I hereby authorize you to release to AT&T now or in the future any and all information, which they may request concerning my account. I understand that such information will be held strictly confidential and will remain AT&T's property whether or not credit is extended. I understand that security may be required by AT&T to establish service. I certify that the above information provided for this credit profile is true and correct to the best of my knowledge. I further authorize AT&T to obtain other credit information including D&B reports and Credit Bureau Reports.

Company: _____

Signed By: _____ Date: _____

Printed Name: _____ Title_____

Authorized signature must be an Officer, Partner, or Sole Proprietor.

*Has AT&T ever provided service to the Company or any other entity presently or previously owned or controlled by the Company or any of the Company's Principal Officers, Partners or Owners? Please provide company names _____

**If business is a Sole Proprietorship or Partnership, Social Security numbers must be provided.
Transactions greater than $25,000 may require financial statements.

BellSouth Interconnection
Billing Adjust Request Form (BAR) RF-1461 ATT 7 Exhibit C

Billing Company Contact Information Section:	
1. Billing Company Name:	2. Billing Contact Name:
3. Billing Contact Address:	4. Billing Contact Phone:
	5. Billing Contact Fax #:
	6. Billing Contact Email:
Disputing Company Contact Information Section:	
7. Disputing Company Name:	8. Disputing Contact Name:
9. Disputing Contact Address:	10. Disputing Contact Phone:
	11. Disputing Contact Fax #:
	12. Disputing Contact Email:

General Dispute Section:

13. Date of Claim: (yyyy-mm-dd):		14. Status:	15. Claim/Audit Number:	
16. Service Type:				
17. ACNA:	18. OCN:	19. CIC:	20. BAN:	21. Invoice Number(s):
22. Bill Date: 23. Billed Amount: $_____		24. Dispute Reason Code:	25. Dispute Desc:	
26. Disputed Amount: $ 27. Disputed Amount Withheld: $ 28. Disputed Amount Paid: $			29. Dispute Bill Date From: Dispute Bill Date Thru:	

Dispute Information Section:

30. Rate Element/USOC:		31. Rate: Billed Correct
Factor Information: 32. PIU: Billed Correct 33. PLU: Billed Correct 34. BIP: Billed Correct 35. Other Factors: Billed Correct	36: Jurisdiction ☐ Non Jurisdictional ☐ Inter/Interstate ☐ Intra/Interstate ☐ Intra/Intrastate ☐ Inter/Intrastate ☐ Local	37. Mileage: Billed Correct 38. Contract Name/#: 39. Business/Residence Indicator: 40: State: 41: LATA:

Facilities/Dedicated Circuit Dispute Information Section:

42. PON: 43 SON: 44. EC Circuit ID: 45 Circuit Location: 46. IC Circuit ID: 47. CFA :	48. TN/All: 49. Point Code: 50. USOC Quantity: 51. Two-Six Code:
52. Facilities From Date: Thru Date:	

Please see below for obtaining this Dispute Template and Specifications.

A complete OBF Document Catalog and On-line Document Store is available on the ATIS Web Site at: http://www.atis.org/atis/clc/obf/download.htm

(Rev 5-12-03) Version 20 (Changed Dispute Template to OBF Standard)

Attachment 8

Rights-of-Way, Conduits and Pole Attachments

Rights-of-Way, Conduits and Pole Attachments

AT&T will provide nondiscriminatory access to any pole, duct, conduit, or right-of-way owned or controlled by AT&T pursuant to 47 U.S.C. § 224, as amended by the Act, pursuant to terms and conditions of a license agreement subsequently negotiated with BellSouth's Competitive Structure Provisioning Center.

Attachment 9

Performance Measurements and Associated Remedies

PERFORMANCE MEASUREMENTS AND ASSOCIATED REMEDIES

Upon a particular Commission's issuance of an Order pertaining to Performance Measurements and any associated remedies or enforcement mechanisms (including SEEMs measures and payments) in a proceeding applicable to all CLECs generally, AT&T shall implement in that state such Performance Measurements and any associated remedies or enforcement mechanisms (including SEEMs measures and payments) as of the date specified by the Commission. Performance Measurements and any associated remedies or enforcement mechanisms (including SEEMs measures and payments) that have been ordered in a particular state can currently be accessed via the internet at https://pmap.wholesale.att.com. Nothing in this Attachment 9 shall supercede a Party's right to other remedies or legal recourse available under other provisions of this Agreement, the Act and Applicable Law; provided, however, that the payment of any associated remedies or enforcement mechanisms to each CLEC shall be credited against any liability associated with or related to BellSouth's service performance and shall not be considered an admission against interest or an admission of culpability or liability in any legal, regulatory or other proceeding, nor constitute evidence that AT&T failed to comply with or has violated any state or federal law or regulation.

Attachment 10

AT&T Disaster Recovery Plan

CONTENTS

		PAGE
1.	Purpose	2
2.	Single Point of Contact	2
3.	Identifying the Problem	2
3.1	Site Control	3
3.2	Environmental Concerns	4
4.	The Emergency Control Center (ECC)	4
5.	Recovery Procedures	5
5.1	CLEC Outage	5
5.2	AT&T Outage	5
5.2.1	Loss of Central Office	6
5.2.2	Loss of a Central Office with Serving Wire Center Functions	6
5.2.3	Loss of a Central Office with Tandem Functions	7
5.2.4	Loss of a Facility Hub	7
5.3	Combined Outage (CLEC and AT&T Equipment)	8
6.	T1 Identification Procedures	8
7.	Acronyms	8
8.	Hurricane Information	9
9.	BST Disaster Management Plan	9

1. PURPOSE

In the unlikely event of a disaster occurring that affects BellSouth's long-term ability to deliver traffic to a Competitive Local Exchange Carrier (CLEC), general procedures have been developed by AT&T to hasten the recovery process in accordance with the Telecommunications Service Priority (TSP) Program established by the Federal Communications Commission to identify and prioritize telecommunication services that support national security or emergency preparedness (NS/EP) missions. Since each location is different and could be affected by an assortment of potential problems, a detailed recovery plan is impractical. However, in the process of reviewing recovery activities for specific locations, some basic procedures emerge that appear to be common in most cases.

These general procedures should apply to any disaster that affects the delivery of traffic for an extended time period. Each CLEC will be given the same consideration during an outage, and service will be restored as quickly as possible.

This document will cover the basic recovery procedures that would apply to every CLEC.

2. SINGLE POINT OF CONTACT

When a problem is experienced, regardless of the severity, the AT&T Network Management Center (NMC) will observe traffic anomalies and begin monitoring the situation. Controls will be appropriately applied to insure the operability of BellSouth's network; and, in the event that a switch or facility node is lost, the NMC will attempt to circumvent the failure using available reroutes.

BellSouth's NMC will remain in control of the restoration efforts until the problem has been identified as being a long-term outage. At that time, the NMC will contact BellSouth's Emergency Control Center (ECC) and relinquish control of the recovery efforts. Even though the ECC may take charge of the situation, the NMC will continue to monitor the circumstances and restore traffic as soon as damaged network elements are revitalized.

The telephone number for the AT&T Network Management Center in Atlanta, as published in Telcordia's National Network Management Directory, is 404-321-2516. The telephone number for NuVox's Local Switch Control Center is 800.236.7284 Option 2.

3. IDENTIFYING THE PROBLEM

During the early stages of problem detection, the NMC will be able to tell which CLECs are affected by the catastrophe. Further analysis and/or first hand observation will determine if the disaster has affected CLEC equipment only, AT&T equipment only or a combination. The initial restoration activity will be largely determined by the equipment that is affected.

Once the nature of the disaster is determined and after verifying the cause of the problem, the NMC will initiate reroutes and/or transfers that are jointly agreed upon by the affected CLECs' Network Management Center and the AT&TNMC. The type and percentage of controls used will depend upon available network capacity. Controls necessary to stabilize the situation will be invoked and the NMC will attempt to re-establish as much traffic as possible.

For long-term outages, recovery efforts will be coordinated by the Emergency Control Center (ECC). Traffic controls will continue to be applied by the NMC until facilities are re-established. As equipment is made available for service, the ECC will instruct the NMC to begin removing the controls and allow traffic to resume.

3.1 SITE CONTROL

In the total loss of building use scenario, what likely exists will be a smoking pile of rubble. This rubble will contain many components that could be dangerous. It could also contain any personnel on the premises at the time of the disaster. For these reasons, the local fire marshal with the assistance of the police will control the site until the building is no longer a threat to surrounding properties and the companies have secured the site from the general public.

During this time, the majority owner of the building should be arranging for a demolition contractor to mobilize to the site with the primary objective of reaching the cable entrance facility for a damage assessment. The results of this assessment would then dictate immediate plans for restoration, both short term and permanent.

In a less catastrophic event, i.e., the building is still standing and the cable entrance facility is usable, the situation is more complex. The site will initially be controlled by local authorities until the threat to adjacent property has diminished. Once the site is returned to the control of the companies, the following events should occur.

An initial assessment of the main building infrastructure systems (mechanical, electrical, fire and life safety, elevators, and others) will establish building needs. Once these needs are determined, the majority owner should lead the building restoration efforts. There may be situations where the site will not be totally restored within the confines of the building. The companies must individually determine their needs and jointly assess the cost of permanent restoration to determine the overall plan of action.

Multiple restoration trailers from each company will result in the need for designated space and installation order. This layout and control is required to maximize the amount of restoration equipment that can be placed at the site, and the priority of placements.

Care must be taken in this planning to ensure other restoration efforts have logistical access to the building. Major components of telephone and building equipment will need to be removed and replaced. A priority for this equipment must also be jointly established to facilitate overall site restoration. (Example: If the AC switchgear has sustained damage, this would be of the highest priority in order to regain power, lighting, and HVAC throughout the building.)

If the site will not accommodate the required restoration equipment, the companies would then need to quickly arrange with local authorities for street closures, rights of way or other possible options available.

3.2 ENVIRONMENTAL CONCERNS

In the worse case scenario, many environmental concerns must be addressed. Along with the police and fire marshal, the state environmental protection department will be on site to monitor the situation.

Items to be concerned with in a large central office building could include:

1. Emergency engine fuel supply. Damage to the standby equipment and the fuel handling equipment could have created "spill" conditions that have to be handled within state and federal regulations.
2. Asbestos-containing materials that may be spread throughout the wreckage. Asbestos could be in many components of building, electrical, mechanical, outside plant distribution, and telephone systems.
3. Lead and acid. These materials could be present in potentially large quantities depending upon the extent of damage to the power room.
4. Mercury and other regulated compounds resident in telephone equipment.
5. Other compounds produced by the fire or heat.

Once a total loss event occurs at a large site, local authorities will control immediate clean up (water placed on the wreckage by the fire department) and site access.

At some point, the companies will become involved with local authorities in the overall planning associated with site clean up and restoration. Depending on the clean up approach taken, delays in the restoration of several hours to several days may occur.

In a less severe disaster, items listed above are more defined and can be addressed individually depending on the damage.

In each case, the majority owner should coordinate building and environmental restoration as well as maintain proper planning and site control.

4. THE EMERGENCY CONTROL CENTER (ECC)

The ECC is located in the Midtown 1 Building in Atlanta, Georgia. During an emergency, the ECC staff will convene a group of pre-selected experts to inventory the damage and initiate corrective actions. These experts have regional access to BellSouth's personnel and equipment and will assume control of the restoration activity anywhere in the nine-state area.

In the past, the ECC has been involved with restoration activities resulting from hurricanes, ice storms and floods. They have demonstrated their capabilities during these calamities as well as during outages caused by human error or equipment failures. This group has an excellent record of restoring service as quickly as possible.

During a major disaster, the ECC may move emergency equipment to the affected location, direct recovery efforts of local personnel and coordinate service restoration activities with the CLECs. The ECC will attempt to restore service as quickly as possible using whatever means is available, leaving permanent solutions, such as the replacement of damaged buildings or equipment, for local personnel to administer.

Part of the ECC's responsibility, after temporary equipment is in place, is to support the NMC efforts to return service to the CLECs. Once service has been restored, the ECC will return control of the network to normal operational organizations. Any long-term changes required after service is restored will be made in an orderly fashion and will be conducted as normal activity.

5. RECOVERY PROCEDURES

The nature and severity of any disaster will influence the recovery procedures. One crucial factor in determining how AT&T will proceed with restoration is whether or not BellSouth's equipment is incapacitated. Regardless of whose equipment is out of service, AT&T will move as quickly as possible to aid with service recovery; however, the approach that will be taken may differ depending upon the location of the problem.

5.1 CLEC OUTAGE

For a problem limited to one CLEC (or a building with multiple CLECs), AT&T has several options available for restoring service quickly. For those CLECs that have agreements with other CLECs, AT&T can immediately start directing traffic to a provisional CLEC for completion. This alternative is dependent upon AT&T having concurrence from the affected CLECs.

Whether or not the affected CLECs have requested a traffic transfer to another CLEC will not impact BellSouth's resolve to re-establish traffic to the original destination as quickly as possible.

5.2 AT&TOUTAGE

Because BellSouth's equipment has varying degrees of impact on the service provided to the CLECs, restoring service from damaged AT&T equipment is different. The outage will probably impact a number of Carriers simultaneously. However, the ECC will be able to initiate immediate actions to correct the problem.

A disaster involving any of BellSouth's equipment locations could impact the CLECs, some more than others. A disaster at a Central Office (CO) would only impact the delivery of traffic to and from that one location, but the incident could affect many Carriers. If the Central Office is a Serving Wire Center (SWC), then traffic from the entire area to those Carriers served from that switch would also be impacted. If the switch functions as an Access Tandem, or there is a tandem in the building, traffic from every CO to every CLEC could be interrupted. A disaster that destroys a facility hub could disrupt various traffic flows, even though the switching equipment may be unaffected.

The NMC would be the first group to observe a problem involving BellSouth's equipment. Shortly after a disaster, the NMC will begin applying controls and finding re-routes for the completion of as much traffic as possible. These reroutes may involve delivering traffic to alternate Carriers upon receiving approval from the CLECs involved. In some cases, changes in translations will be required. If the outage is caused by the destruction of equipment, then the ECC will assume control of the restoration.

5.2.1 Loss of a Central Office

When AT&T loses a Central Office, the ECC will

a) Place specialists and emergency equipment on notice;

b) Inventory the damage to determine what equipment and/or functions are lost;

c) Move containerized emergency equipment and facility equipment to the stricken area, if necessary;

d) Begin reconnecting service on a parity basis for Hospitals, Police and other emergency agencies or customers served by AT&T or CLEC in accordance with the TSP priority restoration coding scheme entered in the AT&T Maintenance database immediately prior to the emergency;

e) Begin restoring service, on a parity basis, to other customers served by CLECs or BellSouth.

5.2.2 Loss of a Central Office with Serving Wire Center Functions

The loss of a Central Office that also serves as a Serving Wire Center (SWC) will be restored as described in Section 5.2.1.

5.2.3 Loss of a Central Office with Tandem Functions

When AT&T loses a Central Office building that serves as an Access Tandem and as a SWC, the ECC will

a) Place specialists and emergency equipment on notice;

b) Inventory the damage to determine what equipment and/or functions are lost;

c) Move containerized emergency equipment and facility equipment to the stricken area, if necessary;

d) Begin reconnecting service on a parity basis for Hospitals, Police and other emergency agencies or customers served by AT&T or CLEC in accordance with the TSP priority restoration coding scheme entered in the AT&T Maintenance database immediately prior to the emergency;

e) Re-direct as much traffic as possible to the alternate access tandem (if available) for delivery to those CLECs utilizing a different location as a SWC;

f) Begin aggregating traffic to a location near the damaged building. From this location, begin re-establishing trunk groups to the CLECs for the delivery of traffic normally found on the direct trunk groups (This aggregation point may be the alternate access tandem location or another CO on a primary facility route.);

g) Begin restoring service, on a parity basis, to other customers served by CLECs or BellSouth.

5.2.4 Loss of a Facility Hub

In the event that AT&T loses a facility hub, the recovery process is much the same as above. Once the NMC has observed the problem and administered the appropriate controls, the ECC will assume authority for the repairs. The recovery effort will include

a) Placing specialists and emergency equipment on notice;

b) Inventorying the damage to determine what equipment and/or functions are lost;

c) Moving containerized emergency equipment to the stricken area, if necessary;

d) Reconnecting service on a parity basis for Hospitals, Police and other emergency agencies or customers served by AT&T or CLEC in accordance with the TSP priority restoration coding scheme entered in the AT&T Maintenance database immediately prior to the emergency; and

e) If necessary, AT&T will aggregate the traffic at another location and build temporary facilities. This alternative would be viable for a location that is destroyed and building repairs are required.

f) Begin restoring service, on a parity basis, to other customers served by CLECs or BellSouth.

5.3 COMBINED OUTAGE (CLEC AND AT&T EQUIPMENT)

In some instances, a disaster may impact AT&T equipment as well as the CLEC equipment. This situation will be handled in much the same way as described in Section 5.2.3. Since AT&T and the CLECs will be utilizing temporary equipment, close coordination will be required.

6. T1 IDENTIFICATION PROCEDURES

During the restoration of service after a disaster, AT&T may be forced to aggregate traffic for delivery to a CLEC. During this process, T1 traffic may be consolidated onto DS3s and may become unidentifiable to the Carrier. Because resources will be limited, AT&T may be forced to "package" this traffic entirely differently than normally received by the CLECs. Therefore, a method for identifying the T1 traffic on the DS3s and providing the information to the Carriers is required. If information to facilitate billing among Carriers needs to be established, the Parties shall negotiate in good faith a resolution of such identification, information and billing issues and may use traffic figures averaged over the most recent three (3) month period as a proxy taking into account known or expected deviations during the recovery period.

7. ACRONYMS

CLEC	-	Competitive Local Exchange Carrier
CO	-	Central Office (BellSouth)
DS3	-	Facility that carries 28 T1s (672 circuits)
ECC	-	Emergency Control Center (BellSouth)
NMC	-	Network Management Center
SWC	-	Serving Wire Center (AT&Tswitch)
T1	-	Facility that carries 24 circuits
TSP	-	Telecommunications Service Priority

8. Hurricane Information

During a hurricane, AT&T will make every effort to keep CLECs updated on the status of our network. Information centers will be set up by BellSouth. These centers are not intended to be used for escalations, but rather to keep the CLEC informed of network related issues, area damages and dispatch conditions, etc.

Hurricane-related information will be regularly updated and can also be found on line at http://wholesale.att.com/alerts_and_notifications/network/disaster/mdrs/des_resp.html. Information concerning Mechanized Disaster Reports can also be found at this website.

9.0 BST Disaster Management Plan

AT&T maintenance centers have geographical and redundant communication capabilities. In the event of a disaster removing any maintenance center from service another geographical center would assume maintenance responsibilities. The contact numbers will not change and the transfer will be transparent to the CLEC.

Attachment 11

Bona Fide Request and New Business Request Process

BONA FIDE REQUEST AND NEW BUSINESS REQUEST PROCESS

1. BONA FIDE REQUEST

1.1 The Parties agree that NuVox is entitled to order any network element, interconnection option, or service option required to be made available by FCC or Commission requirements pursuant to the Act. A Bona Fide Request (BFR) is to be used when NuVox makes a request of AT&T to provide a new or modified network element, interconnection option or other service option pursuant to the Act that was not previously provided for in this Agreement.

1.2 A BFR shall be submitted in writing by NuVox and shall specifically identify the requested service date, technical requirements, space requirements and/or such other specifications that clearly define the request such that AT&T has sufficient information to analyze and prepare a response. Such a request shall also include NuVox's designation of the request as being pursuant to the Telecommunications Act of 1996 (*i.e.*, a BFR). The request shall be sent to NuVox's designated AT&T sales contact or Local Contract Manager.

1.3 Within two (2) business days of receipt of a BFR, AT&T shall acknowledge in writing its receipt and identify a single point of contact responsible for responding to the BFR and shall request any additional information needed to process the request to the extent known at that time. Notwithstanding the foregoing, AT&T may reasonably request additional information from NuVox at any time during the processing of the BFR.

1.4 Within thirty (30) business days of AT&T's receipt of the BFR, if preliminary analysis of the requested BFR is not of such complexity that it will cause AT&T to expend extraordinary resources to evaluate the BFR, AT&T shall respond to NuVox by providing a preliminary analysis of the new or modified network element or interconnection option not ordered by the FCC or Commission that is the subject of the BFR**.** The preliminary analysis shall either confirm that AT&T will offer access to the new or modified network element, interconnection option or service option or confirm that AT&T will not offer the new or modified network element, interconnection option or service option.

1.5 For any new or modified network element, interconnection option or service option not ordered by the FCC or Commission, if the preliminary analysis states that AT&T will offer the new or modified network element, interconnection option or service option, the preliminary analysis will include an estimate of the costs of utilizing existing resources, both personnel and systems, in the development including, but not limited to, request parameters analysis, determination of impacted AT&T departments, determination of required

resources, project management resources, etc. (Development Rate) including a general breakdown of such costs associated with the network element, interconnection option or service option and the date the request can be met. If the preliminary analysis states that AT&T will not offer the new or modified network element, interconnection option or service option, AT&T will provide an explanation of why the request is not technically feasible, does not qualify as a BFR for the new or modified network element, interconnection option or service option, should actually be submitted as a NBR or is otherwise not required to be provided under the Act. If AT&T cannot provide the network element, interconnection option or service option by the requested date, AT&T shall provide an alternative proposed date together with a detailed explanation as to why AT&T is not able to meet NuVox's requested date.

1.6 For any new or modified network element, interconnection option or service option not ordered by the FCC or Commission, if AT&T determines that the preliminary analysis of the requested BFR is of such complexity that it will cause AT&T to expend extraordinary resources to evaluate the BFR, AT&T shall notify NuVox within ten (10) business days of AT&T's receipt of BFR that a fee will be required prior to the preliminary evaluation of the BFR. Such fee shall be limited to AT&T's extraordinary expenses directly related to the complex request that require the allocation and engagement of additional resources above the existing allocated resources used on BFR/NBR cost development which include, but are not limited to, expenditure of funds to develop feasibility studies, specific resources that are required to determine request requirements (such as operation support system analysts, technical managers, software developers), software impact analysis by specific software developers; software architecture development, hardware impact analysis by specific system analysts, etc. and the request for such fee shall be accompanied with a general breakdown of such costs. If NuVox accepts the complex request evaluation fee proposed by AT&T, NuVox shall submit such fee within thirty (30) business days of AT&T's notice that a complex request evaluation fee is required. Within thirty (30) business days of AT&T's receipt of the complex request evaluation fee, AT&T shall respond to NuVox by providing a preliminary analysis, consistent with Section 1.4 of this Attachment 11.

1.7 NuVox may cancel a BFR at any time. If NuVox cancels the request within ten (10) business days after submitting the BFR request, no charges will be incurred. If NuVox cancels the BFR within thirty (30) business days after receipt of AT&T's preliminary analysis, AT&T shall be entitled to keep any complex request evaluation fee submitted in accordance with Section 1.6 above, minus those costs included in the fee that have not been incurred as of the date of cancellation.

1.8 NuVox will have thirty (30) business days from receipt of preliminary analysis to accept the preliminary analysis or cancel the BFR. If NuVox fails to respond within this thirty (30) business day period, the BFR will be deemed cancelled.

1.8.1 Acceptance of the preliminary analysis must be in writing and accompanied by the estimated Development Rate for the new or modified network element, interconnection option or service option quoted in the preliminary analysis**.**

1.9 Notwithstanding any other provision of this Agreement, AT&T shall propose a firm price quote, including the firm Development Rate**,** the firm nonrecurring rate and the firm recurring rate, and a detailed implementation plan within ten (10) business days of receipt of NuVox's accurate BFR application for a network element, interconnection option or service option that is operational at the time of the request; thirty (30) business days of receipt of NuVox's accurate BFR application for a new or modified network element, interconnection option or service option ordered by the FCC or Commission; and within sixty (60) business days of receipt of NuVox's accurate BFR application for a new or modified network element, interconnection option or service option not ordered by the FCC or Commission or not operational at the time of the request. The firm nonrecurring rate will not include any of the Development Rate or the complex request evaluation fee, if required, in the calculation of this rate. Such firm price quote shall not exceed the estimate provided with the preliminary analysis by more than 25%.

1.10 NuVox shall have thirty (30) business days from receipt of the firm price quote to accept or deny the firm price quote and submit any additional Development or nonrecurring rates quoted in the firm price quote. If the firm price quote is less than the preliminary analysis' estimated Development Rate and/or nonrecurring rate for the new or modified network element, interconnection option or service option not ordered by the FCC or Commission, AT&T will credit NuVox's account for the difference**.**

1.11 Unless NuVox agrees otherwise, all prices shall be consistent with the applicable pricing principles and provisions of the Act and rules, orders and regulations of the FCC and/or the Commission.

1.12 If NuVox believes that AT&T's firm price quote is not consistent with the requirements of the Act, either Party may seek dispute resolution in accordance with the dispute resolution provisions set forth in the General Terms and Conditions of this Agreement. Any such arbitration applicable to network element, interconnection option and/or service option pricing shall be conducted in accordance with standards prescribed in Sections 251 and 252 of the Act. While the dispute is pending, NuVox shall have the option of requesting AT&T to provide the network element, interconnection option or service option subject to a retroactive pricing true up upon an effective Commission order resolving the

dispute. The Parties agree that subsequent true-ups may result from multiple rounds of appellate or reconsideration decisions, should the relevant Party pursue such appeals/reconsiderations/review and prevail. AT&T will provide a cost study upon request after the firm quote.

1.13 If either Party believes that the other is not acting in good faith in requesting, negotiating, processing or implementing the BFR, either Party may seek to resolve the dispute pursuant to the dispute resolution provisions set forth in the General Terms and Conditions of this Agreement.

1.14 Upon agreement to the rates, terms and conditions of a BFR, the Parties shall negotiate in good faith an amendment to this Agreement.

2. NEW BUSINESS REQUEST

2.1 NuVox also shall be permitted to request the development of new or revised facilities or service options which may not be required by the Act. Procedures applicable to requesting the addition of such elements, services and options are specified in this Attachment 11. A New Business Request (NBR) is to be used by NuVox to make a request of AT&T for a new or modified feature or capability of an existing product or service, a new product or service that is not deployed within the AT&T network or operations and business support systems, or a new or modified service option that was not previously included in this Agreement (Requested NBR Services) and is not required by the Act.

2.2 An NBR shall be submitted in writing by NuVox and shall specifically identify the requested service date, technical requirements, space requirements and/or such specifications that clearly define the request such that AT&T has sufficient information to analyze and prepare a response. The request shall be sent to NuVox's designated AT&T sales contact or Local Contract Manager.

2.3 Within two (2) business days of receipt of an NBR, AT&T shall acknowledge in writing its receipt and identify a single point of contact responsible for responding to the NBR and shall request any additional information needed to process the request to the extent known at that time. Notwithstanding the foregoing, AT&T may reasonably request additional information from NuVox at any time during the processing of the NBR.

2.4 If the preliminary analysis of the requested NBR is not of such complexity that it will cause AT&T to expend extraordinary resources to evaluate the NBR, within thirty (30) business days of its receipt of the NBR, AT&T shall respond to NuVox by providing a preliminary analysis of such Requested NBR Services that are the subject of the NBR. The preliminary analysis shall either confirm that AT&T will offer access to the Requested NBR Services or confirm that AT&T will not offer the Requested NBR Services.

2.4.1 If the preliminary analysis states that AT&T will offer the Requested NBR Services, the preliminary analysis will include an estimate of the Development Rate including a general breakdown of costs and the date the request can be met. If AT&T cannot provide the Requested NBR Service by the requested date, it shall provide an alternative proposed date together with a detailed explanation as to why AT&T is not able to meet NuVox's requested date. If the preliminary analysis states that AT&T will not offer the Requested NBR Services, AT&T will provide an explanation of why the request is not technically feasible, does not qualify as an NBR for the Requested NBR Services.

2.5 If AT&T determines that the preliminary analysis of the requested NBR is of such complexity that it will cause AT&T to expend extraordinary resources to evaluate the NBR, AT&T shall notify NuVox within ten (10) business days of AT&T's receipt of the NBR that a complex request evaluation fee will be required prior to the evaluation of the NBR. Such fee shall be limited to AT&T's extraordinary expenses directly related to the complex request. If NuVox accepts the complex request evaluation fee amount proposed by AT&T, NuVox shall submit such complex request evaluation fee within thirty (30) business days of AT&T's notice that a complex request evaluation fee is required.

2.6 Within thirty (30) business days of AT&T's receipt of the complex request evaluation fee, AT&T shall respond to NuVox by providing a preliminary analysis of such Requested NBR Services that are the subject of the NBR.

2.7 NuVox may cancel an NBR at any time. If NuVox cancels the NBR within ten (10) business days after submitting the NBR, no charges will be incurred. If NuVox cancels the NBR within thirty (30) business days after receipt of AT&T's preliminary analysis, AT&T shall be entitled to keep any complex request evaluation fee submitted in accordance with Section 2.6, minus those costs included in the fee that have not been incurred as of the date of cancellation.

2.8 NuVox will have thirty (30) business days from receipt of preliminary analysis to accept the preliminary analysis or cancel the NBR. If NuVox fails to respond within this thirty (30) business day period, the NBR will be deemed cancelled.

2.8.1 Acceptance of the preliminary analysis must be in writing and accompanied by the estimated Development Rate for the Requested NBR Services quoted in the preliminary analysis.

2.9 AT&T shall propose a firm price quote including the firm Development Rate, the firm nonrecurring rate, and the firm recurring rate and a detailed implementation plan within ten (10) business days of receipt of NuVox's accurate NBR application for a Requested NBR Service that is operational at the time of the request and within sixty (60) business days of receipt of NuVox's accurate NBR application for the Requested NBR Services not operational at the time of the

request. The firm nonrecurring rate will not include any of the Development Rate or the complex request evaluation fee, if required, in the calculation of this rate. Such firm price quote shall not exceed the estimate provided with the preliminary analysis by more than 25%.

2.10 NuVox shall have thirty (30) business days from receipt of firm price quote to accept or deny the firm price quote and submit any additional nonrecurring, non-refundable fees quoted in the firm price quote. If the firm price quote is less than the preliminary analysis' estimate of the Development Rate, AT&T will credit NuVox's account for the difference.

2.11 Unless NuVox agrees otherwise, all prices shall be consistent with the applicable pricing principles and provisions of the Act and rules, orders and regulations of the FCC and/or the Commission.

2.12 If either Party believes that the other is not acting in good faith in requesting, negotiating, processing or implementing the NBR, either Party may seek to resolve the dispute pursuant to the dispute resolution provisions set forth in the General Terms and Conditions of this Agreement.

2.13 Upon agreement to the rates, terms and conditions of a NBR, an amendment to this Agreement, or a separate agreement, may be required and the Parties shall negotiate such agreement or amendment in good faith.

Pricing Schedule - South Carolina

CATEGORY	RATE ELEMENTS	Interim	Zone	BCS	USOC	RATES($)					Svc Order Submitted Elec per LSR	Svc Order Submitted Manually per LSR	Incremental Charge - Manual Svc Order vs. Electronic-1st	Incremental Charge - Manual Svc Order vs. Electronic-Add'l	Incremental Charge - Manual Svc Order vs. Electronic-Disc 1st	Incremental Charge - Manual Svc Order vs. Electronic-Disc Add'l
						Rec	Nonrecurring		Nonrecurring Disconnect		OSS Rates($)					
							First	Add'l	First	Add'l	SOMEC	SOMAN	SOMAN	SOMAN	SOMAN	SOMAN
RESALE APPLICABLE DISCOUNTS																
	Residence %					14.80										
	Business %					14.80										
	CSAs %					8.98										
OPERATIONS SUPPORT SYSTEMS (OSS) - "REGIONAL RATES"																
	NOTE: (1) CLEC should contact its contract negotiator if it prefers the "state specific" OSS charges as ordered by the State Commissions. The OSS charges currently contained in this rate exhibit are the AT&T "regional" service ordering charges. CLEC may elect either the state specific Commission ordered rates for the service ordering charges, or CLEC may elect the regional service ordering charge, however, CLEC can not obtain a mixture of the two regardless if CLEC has a interconnection contract established in each of the 9 states.															
	OSS - Electronic Service Order Charge, Per Local Service Request (LSR) - Resale Only				SOMEC		3.50	0.00	3.50	0.00						
	OSS - Manual Service Order Charge, Per Local Service Request (LSR) - Resale Only				SOMAN		19.99	0.00	19.99	0.00						
ODUF/EODUF SERVICES																
	OPTIONAL DAILY USAGE FILE (ODUF)															
	ODUF: Recording, per message					0.0000216										
	ODUF: Message Processing, per message					0.004704										
	ODUF: Message Processing, per Magnetic Tape provisioned					48.87										
	ODUF: Data Transmission (CONNECT:DIRECT), per message					0.00010863										
	ENHANCED OPTIONAL DAILY USAGE FILE (EODUF)															
	EODUF: Message Processing, per message					0.258301										
SELECTIVE CALL ROUTING USING LINE CLASS CODES (SCR-LCC)																
	Selective Routing Per Unique Line Class Code Per Request Per Switch						84.89	84.89	14.14	14.14						
DIRECTORY ASSISTANCE CUSTOM BRANDING ANNOUNCEMENT via OLNS SOFTWARE																
	Recording of DA Custom Branded Announcement						3,000.00	3,000.00								
	Loading of DA Custom Branded Anouncement per Switch per OCN						1,170.00	1,170.00								
DIRECTORY ASSISTANCE UNBRANDING via OLNS SOFTWARE																
	Loading of DA per OCN (1 OCN per Order)						420.00	420.00								
	Loading of DA per Switch per OCN						16.00	16.00								
OPERATOR ASSISTANCE CUSTOM BRANDING ANNOUNCEMENT via OLNS SOFTWARE																
	Recording of Custom Branded OA Announcement						7,000.00	7,000.00								
	Loading of Custom Branded OA Announcement per shelf/NAV per OCN						500.00	500.00								
	Loading of OA Custom Branded Announcement per Switch per OCN						1,170.00	1,170.00								
OPERATOR ASSISTANCE UNBRANDING via OLNS SOFTWARE																
	Loading of OA per OCN (Regional)						1,200.00	1,200.00								
	The "Zone" shown in the sections for stand-alone loops or loops as part of a combination refers to Geographically Deaveraged UNE Zones. To view Geographically Deaveraged UNE Zone Designations by Central Office, refer to internet Website: http://wholesale.att.com/															
OPERATIONS SUPPORT SYSTEMS (OSS) - "REGIONAL RATES"																
	NOTE: (1) CLEC should contact its contract negotiator if it prefers the "state specific" OSS charges as ordered by the State Commissions. The OSS charges currently contained in this rate exhibit are the AT&T "regional" service ordering charges. CLEC may elect either the state specific Commission ordered rates for the service ordering charges, or CLEC may elect the regional service ordering charge, however, CLEC can not obtain a mixture of the two regardless if CLEC has a interconnection contract established in each of the 9 states.															
	NOTE: (2) Any element that can be ordered electronically will be billed according to the SOMEC rate listed in this category. Please refer to AT&T's Local Ordering Handbook (LOH) to determine if a product can be ordered electronically. For those elements that cannot be ordered electronically at present per the LOH, the listed SOMEC rate in this category reflects the charge that would be billed to a CLEC once electronic ordering capabilities come on-line for that element. Otherwise, the manual ordering charge, SOMAN, will be applied to a CLECs bill when it submits an LSR to AT&T.															
	OSS - Electronic Service Order Charge, Per Local Service Request (LSR) - UNE Only				SOMEC		3.50	0.00	3.50	0.00						
	OSS - Manual Service Order Charge, Per Local Service Request (LSR) - UNE Only				SOMAN		15.69	0.00	1.97	0.00						
UNE SERVICE DATE ADVANCEMENT CHARGE																
	NOTE: The Expedite charge will be maintained commensurate with BellSouth's FCC No.1 Tariff, Section 5 as applicable.															

Pricing Schedule - South Carolina

CATEGORY	RATE ELEMENTS	Interim	Zone	BCS	USOC	RATES($)					Svc Order Submitted Elec per LSR	Svc Order Submitted Manually per LSR	Incremental Charge - Manual Svc Order vs. Electronic-1st	Incremental Charge - Manual Svc Order vs. Electronic-Add'l	Incremental Charge - Manual Svc Order vs. Electronic-Disc 1st	Incremental Charge - Manual Svc Order vs. Electronic-Disc Add'l
							Nonrecurring		Nonrecurring Disconnect		OSS Rates($)					
						Rec	First	Add'l	First	Add'l	SOMEC	SOMAN	SOMAN	SOMAN	SOMAN	SOMAN
	UNE Expedite Charge per Circuit or Line Assignable USOC, per Day			UAL, UEANL, UCL, UEF, UDF, UEQ, UDL, UENTW, UDN, UEA, UHL, ULC, USL, U1T12, U1T48, U1TD1, U1TD3, U1TDX, U1TO3, U1TS1, U1TVX, UC1BC, UC1BL, UC1CC, UC1CL, UC1DC, UC1DL, UC1EC, UC1EL, UC1FC, UC1FL, UC1GC, UC1GL, UC1HC, UC1HL, UDL12, UDL48, UDLO3, UDLSX, UE3, ULD12, ULD48, ULDD1, ULDD3, ULDDX, ULDO3, ULDS1, ULDVX, UNC1X, UNC3X, UNCDX, UNCNX, UNCSX, UNCVX, UNLD1, UNLD3, UXTD1, UXTD3, UXTS1, U1TUC, U1TUD, U1TUB, U1TUA,NTCVG, NTCUD, NTCD1	SDASP		90.00									
ORDER MODIFICATION CHARGE																
	Order Modification Charge (OMC)						26.21	0.00	0.00	0.00						
	Order Modification Additional Dispatch Charge (OMCAD)						150.00	0.00	0.00	0.00						
UNBUNDLED EXCHANGE ACCESS LOOP																
2-WIRE ANALOG VOICE GRADE LOOP																
	2-Wire Analog Voice Grade Loop - Service Level 1- Zone 1		1	UEANL	UEAL2	14.94	37.92	17.62	23.56	5.32						
	2-Wire Analog Voice Grade Loop - Service Level 1- Zone 2		2	UEANL	UEAL2	21.39	37.92	17.62	23.56	5.32						
	2-Wire Analog Voice Grade Loop - Service Level 1- Zone 3		3	UEANL	UEAL2	26.72	37.92	17.62	23.56	5.32						
	2-Wire Analog Voice Grade Loop - Service Level 1- Zone 1		1	UEANL	UEASL	14.94	37.92	17.62	23.56	5.32						
	2-Wire Analog Voice Grade Loop - Service Level 1- Zone 2		2	UEANL	UEASL	21.39	37.92	17.62	23.56	5.32						
	2-Wire Analog Voice Grade Loop - Service Level 1- Zone 3		3	UEANL	UEASL	26.72	37.92	17.62	23.56	5.32						
	Manual Order Coordination for UVL-SL1s (per loop)			UEANL	UEAMC		8.17	8.17								
	Order Coordination for Specified Conversion Time for UVL-SL1 (per LSR)			UEANL	OCOSL		18.13	18.13								
	Bulk Migration, per 2 Wire Voice Loop-SL1			UEANL	UREPN		37.92	17.62	23.56	5.32						
	Bulk Migration Order Coordination, per 2 Wire Voice Loop-SL1			UEANL	UREPM		8.17	8.17								
2-WIRE Unbundled COPPER LOOP																
	2-Wire Unbundled Copper Loop - Non-Designed Zone 1		1	UEQ	UEQ2X	12.94	36.40	16.10	22.66	4.42						
	2 Wire Unbundled Copper Loop - Non-Designed - Zone 2		2	UEQ	UEQ2X	14.51	36.40	16.10	22.66	4.42						
	2 Wire Unbundled Copper Loop - Non-Designed - Zone 3		3	UEQ	UEQ2X	15.02	36.40	16.10	22.66	4.42						
	Manual Order Coordination 2 Wire Unbundled Copper Loop - Non-Designed (per loop)			UEQ	USBMC		8.17	8.17								
	Bulk Migration, per 2 Wire UCL-ND			UEQ	UREPN		36.40	16.10	22.66	4.42						
	Bulk Migration Order Coordination, per 2 Wire UCL-ND			UEQ	UREPM		8.17	8.17								
UNBUNDLED EXCHANGE ACCESS LOOP																
2-WIRE ANALOG VOICE GRADE LOOP																
	Switch-As-Is Conversion rate per UNE Loop, Single LSR, (per DS0)			UEA	URESL		5.61	5.61	7.00	7.00						
	Switch-As-Is Conversion rate per UNE Loop, Spreadsheet, (per DS0)			UEA	URESP		5.61	5.61	7.00	7.00						
	Bulk Migration, per 2 Wire Voice Loop-SL2			UEA	UREPN		105.98	68.43								
	Bulk Migration Order Coordination, per 2 Wire Voice Loop-SL2			UEA	UREPM		0.00	0.00								
4-WIRE ANALOG VOICE GRADE LOOP																
	4-Wire Analog Voice Grade Loop - Zone 1		1	UEA	UEAL4	32.59	132.38	94.83	59.35	14.61						
	4-Wire Analog Voice Grade Loop - Zone 2		2	UEA	UEAL4	43.89	132.38	94.83	59.35	14.61						

Pricing Schedule - South Carolina

CATEGORY	RATE ELEMENTS	Interim	Zone	BCS	USOC	RATES($)					Svc Order Submitted Elec per LSR	Svc Order Submitted Manually per LSR	Incremental Charge - Manual Svc Order vs. Electronic-1st	Incremental Charge - Manual Svc Order vs. Electronic-Add'l	Incremental Charge - Manual Svc Order vs. Electronic-Disc 1st	Incremental Charge - Manual Svc Order vs. Electronic-Disc Add'l
							Nonrecurring		Nonrecurring Disconnect				OSS Rates($)			
						Rec	First	Add'l	First	Add'l	SOMEC	SOMAN	SOMAN	SOMAN	SOMAN	SOMAN
	4-Wire Analog Voice Grade Loop - Zone 3		3	UEA	UEAL4	43.38	132.38	94.83	59.35	14.61						
	Switch-As-Is Conversion rate per UNE Loop, Single LSR, (per DS0)			UEA	URESL		5.61	5.61	7.00	7.00						
	Switch-As-Is Conversion rate per UNE Loop, Spreadsheet, (per DS0)			UEA	URESP		5.61	5.61	7.00	7.00						
2-WIRE ISDN DIGITAL GRADE LOOP																
	2-Wire ISDN Digital Grade Loop - Zone 1		1	UDN	U1L2X	25.21	117.58	80.03	53.05	10.61						
	2-Wire ISDN Digital Grade Loop - Zone 2		2	UDN	U1L2X	32.76	117.58	80.03	53.05	10.61						
	2-Wire ISDN Digital Grade Loop - Zone 3		3	UDN	U1L2X	37.70	117.58	80.03	53.05	10.61						
2-WIRE ASYMMETRICAL DIGITAL SUBSCRIBER LINE (ADSL) COMPATIBLE LOOP																
	2 Wire Unbundled ADSL Loop including manual service inquiry & facility reservation - Zone 1		1	UAL	UAL2X	12.19	120.84	70.56	50.37	7.93						
	2 Wire Unbundled ADSL Loop including manual service inquiry & facility reservation - Zone 2		2	UAL	UAL2X	13.71	120.84	70.56	50.37	7.93						
	2 Wire Unbundled ADSL Loop including manual service inquiry & facility reservation - Zone 3		3	UAL	UAL2X	14.14	120.84	70.56	50.37	7.93						
	2 Wire Unbundled ADSL Loop without manual service inquiry & facility reservaton - Zone 1		1	UAL	UAL2W	12.19	95.81	57.82	50.37	7.93						
	2 Wire Unbundled ADSL Loop without manual service inquiry & facility reservaton - Zone 2		2	UAL	UAL2W	13.71	95.81	57.82	50.37	7.93						
	2 Wire Unbundled ADSL Loop without manual service inquiry & facility reservaton - Zone 3		3	UAL	UAL2W	14.14	95.81	57.82	50.37	7.93						
2-WIRE HIGH BIT RATE DIGITAL SUBSCRIBER LINE (HDSL) COMPATIBLE LOOP																
	2 Wire Unbundled HDSL Loop including manual service inquiry & facility reservation - Zone 1		1	UHL	UHL2X	9.58	129.52	79.24	50.37	7.93						
	2 Wire Unbundled HDSL Loop including manual service inquiry & facility reservation - Zone 2		2	UHL	UHL2X	10.92	129.52	79.24	50.37	7.93						
	2 Wire Unbundled HDSL Loop including manual service inquiry & facility reservation - Zone 3		3	UHL	UHL2X	11.40	129.52	79.24	50.37	7.93						
	2 Wire Unbundled HDSL Loop without manual service inquiry and facility reservation - Zone 1		1	UHL	UHL2W	9.58	104.49	66.50	50.37	7.93						
	2 Wire Unbundled HDSL Loop without manual service inquiry and facility reservation - Zone 2		2	UHL	UHL2W	10.92	104.49	66.50	50.37	7.93						
	2 Wire Unbundled HDSL Loop without manual service inquiry and facility reservation - Zone 3		3	UHL	UHL2W	11.40	104.49	66.50	50.37	7.93						
4-WIRE HIGH BIT RATE DIGITAL SUBSCRIBER LINE (HDSL) COMPATIBLE LOOP																
	4 Wire Unbundled HDSL Loop including manual service inquiry and facility reservation - Zone 1		1	UHL	UHL4X	16.02	158.18	107.89	55.12	10.38						
	4-Wire Unbundled HDSL Loop including manual service inquiry and facility reservation - Zone 2		2	UHL	UHL4X	14.33	158.18	107.89	55.12	10.38						
	4-Wire Unbundled HDSL Loop including manual service inquiry and facility reservation - Zone 3		3	UHL	UHL4X	16.84	158.18	107.89	55.12	10.38						
	4-Wire Unbundled HDSL Loop without manual service inquiry and facility reservation - Zone 1		1	UHL	UHL4W	16.02	133.14	95.16	55.12	10.38						
	4-Wire Unbundled HDSL Loop without manual service inquiry and facility reservation - Zone 2		2	UHL	UHL4W	14.33	133.14	95.16	55.12	10.38						
	4-Wire Unbundled HDSL Loop without manual service inquiry and facility reservation - Zone 3		3	UHL	UHL4W	16.84	133.14	95.16	55.12	10.38						
4-WIRE DS1 DIGITAL LOOP																
	4-Wire DS1 Digital Loop - Zone 1		1	USL	USLXX	79.51	253.03	157.89	44.80	11.73						
	4-Wire DS1 Digital Loop - Zone 2		2	USL	USLXX	136.00	253.03	157.89	44.80	11.73						
	4-Wire DS1 Digital Loop - Zone 3		3	USL	USLXX	229.15	253.03	157.89	44.80	11.73						
	Switch-As-Is Conversion rate per UNE Loop, Single LSR, (per DS1)			USL	URESL		5.61	5.61	7.00	7.00						
	Switch-As-Is Conversion rate per UNE Loop, Spreadsheet, (per DS1)			USL	URESP		5.61	5.61	7.00	7.00						
2-WIRE Unbundled COPPER LOOP																
	2-Wire Unbundled Copper Loop-Designed including manual service inquiry & facility reservation - Zone 1		1	UCL	UCLPB	12.19	119.91	69.62	50.37	7.93						
	2-Wire Unbundled Copper Loop-Designed including manual service inquiry & facility reservation - Zone 2		2	UCL	UCLPB	13.71	119.91	69.62	50.37	7.93						
	2 Wire Unbundled Copper Loop-Designed including manual service inquiry & facility reservation - Zone 3		3	UCL	UCLPB	14.14	119.91	69.62	50.37	7.93						
	2-Wire Unbundled Copper Loop-Designed without manual service inquiry and facility reservation - Zone 1		1	UCL	UCLPW	12.19	94.87	56.89	50.37	7.93						

Pricing Schedule - South Carolina

CATEGORY	RATE ELEMENTS	Interim	Zone	BCS	USOC	RATES($) Rec	Nonrecurring First	Nonrecurring Add'l	Nonrecurring Disconnect First	Nonrecurring Disconnect Add'l	Svc Order Submitted Elec per LSR	Svc Order Submitted Manually per LSR	Incremental Charge - Manual Svc Order vs. Electronic-1st	Incremental Charge - Manual Svc Order vs. Electronic-Add'l	Incremental Charge - Manual Svc Order vs. Electronic-Disc 1st	Incremental Charge - Manual Svc Order vs. Electronic-Disc Add'l
											OSS Rates($)					
											SOMEC	SOMAN	SOMAN	SOMAN	SOMAN	SOMAN
	2-Wire Unbundled Copper Loop-Designed without manual service inquiry and facility reservation - Zone 2		2	UCL	UCLPW	13.71	94.87	56.89	50.37	7.93						
	2-Wire Unbundled Copper Loop-Designed without manual service inquiry and facility reservation - Zone 3		3	UCL	UCLPW	14.14	94.87	56.89	50.37	7.93						
	Order Coordination for Unbundled Copper Loops (per loop)			UCL	UCLMC		8.17	8.17								
4-WIRE COPPER LOOP																
	4-Wire Copper Loop-Designed including manual service inquiry and facility reservation - Zone 1		1	UCL	UCL4S	19.64	144.17	93.88	55.12	10.38						
	4-Wire Copper Loop-Designed including manual service inquiry and facility reservation - Zone 2		2	UCL	UCL4S	20.90	144.17	93.88	55.12	10.38						
	4-Wire Copper Loop-Designed including manual service inquiry and facility reservation - Zone 3		3	UCL	UCL4S	19.34	144.17	93.88	55.12	10.38						
	4-Wire Copper Loop-Designed without manual service inquiry and facility reservation - Zone 1		1	UCL	UCL4W	19.64	119.13	81.15	55.12	10.38						
	4-Wire Copper Loop-Designed without manual service inquiry and facility reservation - Zone 2		2	UCL	UCL4W	20.90	119.13	81.15	55.12	10.38						
	4-Wire Copper Loop-Designed without manual service inquiry and facility reservation - Zone 3		3	UCL	UCL4W	19.34	119.13	81.15	55.12	10.38						
	Order Coordination for Unbundled Copper Loops (per loop)			UCL	UCLMC		8.17	8.17								
	Order Coordination for Specified Conversion Time (per LSR)			UEA, UDN, UAL, UHL, UDL, USL	OCOSL		18.13									
UNE LOOP COMMINGLING																
2-WIRE ANALOG VOICE GRADE LOOP - COMMINGLING																
	2-Wire Analog Voice Grade Loop - Service Level 2 w/Loop or Ground Start Signaling - Zone 1		1	NTCVG	UEAL2	16.68	105.98	68.43	53.05	10.61						
	2-Wire Analog Voice Grade Loop - Service Level 2 w/Loop or Ground Start Signaling - Zone 2		2	NTCVG	UEAL2	23.13	105.98	68.43	53.05	10.61						
	2-Wire Analog Voice Grade Loop - Service Level 2 w/Loop or Ground Start Signaling - Zone 3		3	NTCVG	UEAL2	28.46	105.98	68.43	53.05	10.61						
	2-Wire Analog Voice Grade Loop - Service Level 2 w/Reverse Battery Signaling - Zone 1		1	NTCVG	UEAR2	16.68	105.98	68.43	53.05	10.61						
	2-Wire Analog Voice Grade Loop - Service Level 2 w/Reverse Battery Signaling - Zone 2		2	NTCVG	UEAR2	23.13	105.98	68.43	53.05	10.61						
	2-Wire Analog Voice Grade Loop - Service Level 2 w/Reverse Battery Signaling - Zone 3		3	NTCVG	UEAR2	28.46	105.98	68.43	53.05	10.61						
	Switch-As-Is Conversion rate per UNE Loop, Single LSR, (per DS0)			NTCVG	URESL		5.61	5.61	7.00	7.00						
	Switch-As-Is Conversion rate per UNE Loop, Spreadsheet, (per DS0)			NTCVG	URESP		5.61	5.61	7.00	7.00						
	Loop Tagging - Service Level 2 (SL2)			NTCVG	URETL		11.24	1.10								
4-WIRE ANALOG VOICE GRADE LOOP																
	4-Wire Analog Voice Grade Loop - Zone 1		1	NTCVG	UEAL4	32.59	132.38	94.83	59.35	14.61						
	4-Wire Analog Voice Grade Loop - Zone 2		2	NTCVG	UEAL4	43.89	132.38	94.83	59.35	14.61						
	4-Wire Analog Voice Grade Loop - Zone 3		3	NTCVG	UEAL4	43.38	132.38	94.83	59.35	14.61						
	Switch-As-Is Conversion rate per UNE Loop, Single LSR, (per DS0)			NTCVG	URESL		5.61	5.61	7.00	7.00						
	Switch-As-Is Conversion rate per UNE Loop, Spreadsheet, (per DS0)			NTCVG	URESP		5.61	5.61	7.00	7.00						
4-WIRE DS1 DIGITAL LOOP - COMMINGLING																
	4-Wire DS1 Digital Loop - Zone 1		1	NTCD1	USLXX	79.51	253.03	157.89	44.80	11.73						
	4-Wire DS1 Digital Loop - Zone 2		2	NTCD1	USLXX	136.00	253.03	157.89	44.80	11.73						
	4-Wire DS1 Digital Loop - Zone 3		3	NTCD1	USLXX	229.15	253.03	157.89	44.80	11.73						
	Switch-As-Is Conversion rate per UNE Loop, Single LSR, (per DS1)			NTCD1	URESL		5.61	5.61	7.00	7.00						
	Switch-As-Is Conversion rate per UNE Loop, Spreadsheet, (per DS1)			NTCD1	URESP		5.61	5.61	7.00	7.00						
4-WIRE 19.2, 56 OR 64 KBPS DIGITAL GRADE LOOP																
	4 Wire Unbundled Digital Loop 2.4 Kbps - Zone 1		1	NTCUD	UDL2X	29.93	126.66	89.12	59.35	14.61						
	4 Wire Unbundled Digital Loop 2.4 Kbps - Zone 2		2	NTCUD	UDL2X	33.99	126.66	89.12	59.35	14.61						
	4 Wire Unbundled Digital Loop 2.4 Kbps - Zone3		3	NTCUD	UDL2X	34.74	126.66	89.12	59.35	14.61						
	4 Wire Unbundled Digital Loop 4.8 Kbps -Zone 1		1	NTCUD	UDL4X	29.93	126.66	89.12	59.35	14.61						
	4 Wire Unbundled Digital Loop 4.8 Kbps - Zone 2		2	NTCUD	UDL4X	33.99	126.66	89.12	59.35	14.61						
	4 Wire Unbundled Digital Loop 4.8 Kbps - Zone 3		3	NTCUD	UDL4X	34.74	126.66	89.12	59.35	14.61						
	4 Wire Unbundled Digital Loop 9.6 Kbps - Zone 1		1	NTCUD	UDL9X	29.93	126.66	89.12	59.35	14.61						
	5 Wire Unbundled Digital Loop 9.6 Kbps - Zone 2		2	NTCUD	UDL9X	33.99	126.66	89.12	59.35	14.61						
	6 Wire Unbundled Digital Loop 9.6 Kbps - Zone 3		3	NTCUD	UDL9X	34.74	126.66	89.12	59.35	14.61						

Pricing Schedule - South Carolina

CATEGORY	RATE ELEMENTS	Interim	Zone	BCS	USOC	RATES($)					Svc Order Submitted Elec per LSR	Svc Order Submitted Manually per LSR	Incremental Charge - Manual Svc Order vs. Electronic-1st	Incremental Charge - Manual Svc Order vs. Electronic-Add'l	Incremental Charge - Manual Svc Order vs. Electronic-Disc 1st	Incremental Charge - Manual Svc Order vs. Electronic-Disc Add'l
						Rec	Nonrecurring		Nonrecurring Disconnect		OSS Rates($)					
							First	Add'l	First	Add'l	SOMEC	SOMAN	SOMAN	SOMAN	SOMAN	SOMAN
	4 Wire Unbundled Digital 19.2 Kbps - Zone 1		1	NTCUD	UDL19	29.93	126.66	89.12	59.35	14.61						
	4 Wire Unbundled Digital 19.2 Kbps - Zone 2		2	NTCUD	UDL19	33.99	126.66	89.12	59.35	14.61						
	4 Wire Unbundled Digital 19.2 Kbps - Zone 3		3	NTCUD	UDL19	34.74	126.66	89.12	59.35	14.61						
	4 Wire Unbundled Digital Loop 56 Kbps - Zone 1		1	NTCUD	UDL56	29.93	126.66	89.12	59.35	14.61						
	4 Wire Unbundled Digital Loop 56 Kbps - Zone 2		2	NTCUD	UDL56	33.99	126.66	89.12	59.35	14.61						
	4 Wire Unbundled Digital Loop 56 Kbps - Zone 3		3	NTCUD	UDL56	34.74	126.66	89.12	59.35	14.61						
	4 Wire Unbundled Digital Loop 64 Kbps - Zone 1		1	NTCUD	UDL64	29.93	126.66	89.12	59.35	14.61						
	4 Wire Unbundled Digital Loop 64 Kbps - Zone 2		2	NTCUD	UDL64	33.99	126.66	89.12	59.35	14.61						
	4 Wire Unbundled Digital Loop 64 Kbps - Zone 3		3	NTCUD	UDL64	34.74	126.66	89.12	59.35	14.61						
	Switch-As-Is Conversion rate per UNE Loop, Single LSR, (per DS0)			NTCUD	URESL		5.61	5.61	7.00	7.00						
	Switch-As-Is Conversion rate per UNE Loop, Spreadsheet, (per DS0)			NTCUD	URESP		5.61	5.61	7.00	7.00						
	Order Coordination for Specified Conversion Time (per LSR)			NTCVG, NTCUD, NTCD1	OCOSL		18.13									
MAINTENANCE OF SERVICE																
	Maintenance of Service Charge, Basic Time, per half hour			UDC, UEA, UDL, UDN, USL, UAL, UHL, UCL, NTCVG, NTCUD, NTCD1, U1TD1, U1TD3, U1TDX, U1TS1, U1TVX, UDF, UDFCX, UDLSX, UE3, ULDD1, ULDD3, ULDDX, ULDS1, ULDVX, UNC1X, UNC3X, UNCDX, UNCSX, UNCVX, ULS	MVVBT		80.00	55.00								
	Maintenance of Service Charge, Overtime, per half hour			UDC, UEA, UDL, UDN, USL, UAL, UHL, UCL, NTCVG, NTCUD, NTCD1, U1TD1, U1TD3, U1TDX, U1TS1, U1TVX, UDF, UDFCX, UDLSX, UE3, ULDD1, ULDD3, ULDDX, ULDS1, ULDVX, UNC1X, UNC3X, UNCDX, UNCSX, UNCVX, ULS	MVVOT		90.00	65.00								
	Maintenance of Service Charge, Premium, per half hour			UDC, UEA, UDL, UDN, USL, UAL, UHL, UCL, NTCVG, NTCUD, NTCD1, U1TD1, U1TD3, U1TDX, U1TS1, U1TVX, UDF, UDFCX, UDLSX, UE3, ULDD1, ULDD3, ULDDX, ULDS1, ULDVX, UNC1X, UNC3X, UNCDX, UNCSX, UNCVX, ULS	MVVPT		100.00	75.00								
LOOP MODIFICATION																
	Unbundled Loop Modification, Removal of Load Coils - 2 Wire pair less than or equal to 18k ft, per Unbundled Loop			UAL, UHL, UCL, UEQ, ULS, UEA, UEANL, UEPSR, UEPSB	ULM2L		32.46	32.46								
	Unbundled Loop Modification Removal of Load Coils - 4 Wire less than or equal to 18K ft, per Unbundled Loop			UHL, UCL, UEA	ULM4L		32.46	32.46								

Pricing Schedule - South Carolina

CATEGORY		RATE ELEMENTS	Interim	Zone	BCS	USOC	RATES($)					Svc Order Submitted Elec per LSR	Svc Order Submitted Manually per LSR	Incremental Charge - Manual Svc Order vs. Electronic-1st	Incremental Charge - Manual Svc Order vs. Electronic-Add'l	Incremental Charge - Manual Svc Order vs. Electronic-Disc 1st	Incremental Charge - Manual Svc Order vs. Electronic-Disc Add'l
								Nonrecurring		Nonrecurring Disconnect				OSS Rates($)			
							Rec	First	Add'l	First	Add'l	SOMEC	SOMAN	SOMAN	SOMAN	SOMAN	SOMAN
		Unbundled Loop Modification Removal of Bridged Tap Removal, per unbundled loop			UAL, UHL, UCL, UEQ, ULS, UEA, UEANL, UEPSR, UEPSB	ULMBT		32.48	32.48								
SUB-LOOPS																	
	Sub-Loop Distribution																
		Order Coordination for Unbundled Sub-Loops, per sub-loop pair			UEANL	USBMC		8.17	8.17								
		Order Coordination for Unbundled Sub-Loops, per sub-loop pair			UEANL	USBMC		8.17	8.17								
		Order Coordination for Unbundled Sub-Loops, per sub-loop pair			UEANL	USBMC		8.17	8.17								
		Order Coordination for Unbundled Sub-Loops, per sub-loop pair			UEANL	USBMC		8.17	8.17								
		Order Coordination for Unbundled Sub-Loops, per sub-loop pair			UEF	USBMC		8.17	8.17								
		Order Coordination for Unbundled Sub-Loops, per sub-loop pair			UEF	USBMC		8.17	8.17								
	Unbundled Sub-Loop Modification																
		Unbundled Sub-Loop Modification - 2-W Copper Dist Load Coil/Equip Removal per 2-W PR			UEF	ULM2X		176.17	5.11								
		Unbundled Sub-loop Modification - 4-W Copper Dist Load Coil/Equip Removal per 4-W PR			UEF	ULM4X		176.17	5.11								
		Unbundled Loop Modification, Removal of Bridge Tap, per unbundled loop			UEF	ULMBT		278.82	6.13								
	Network Interface Device (NID)																
		Network Interface Device (NID) - 1-2 lines			UENTW	UND12		43.68	28.79								
		Network Interface Device (NID) - 1-6 lines			UENTW	UND16		64.42	49.53								
		Network Interface Device Cross Connect - 2 W			UENTW	UNDC2		5.92	5.92								
		Network Interface Device Cross Connect - 4W			UENTW	UNDC4		5.92	5.92								
UNE OTHER, PROVISIONING ONLY - NO RATE																	
		Unbundled Contact Name, Provisioning Only - no rate			UAL, UCL, UDC, UDL, UDN, UEA, UHL, UEANL, UEF, UEQ, UENTW, NTCVG, NTCUD, NTCD1, USL	UNECN	0.00	0.00									
		Unbundled DS1 Loop - Superframe Format Option - no rate			USL, NTCD1	CCOSF		0.00									
		Unbundled DS1 Loop - Expanded Superframe Format option - no rate			USL, NTCD1	CCOEF		0.00									
		NID - Dispatch and Service Order for NID installation			UENTW	UNDBX	0.00	0.00									
LOOP MAKE-UP																	
		Loop Makeup - Preordering Without Reservation, per working or spare facility queried (Manual).			UMK	UMKLW		24.04	24.04								
		Loop Makeup - Preordering With Reservation, per spare facility queried (Manual).			UMK	UMKLP		25.49	25.49								
		Loop Makeup--With or Without Reservation, per working or spare facility queried (Mechanized)			UMK	UMKMQ		0.34	0.34								
LINE SPLITTING																	
	END USER ORDERING-CENTRAL OFFICE BASED																
		Line Splitting - per line activation DLEC owned splitter			UEPSR UEPSB	UREOS	0.61										
		Line Splitting - per line activation AT&T owned - physical			UEPSR UEPSB	UREBP	0.61	37.09	21.24	20.07	9.85						
		Line Splitting - per line activation AT&T owned - virtual			UEPSR UEPSB	UREBV	0.61	37.09	21.24	20.07	9.85						
	END USER ORDERING - REMOTE SITE LINE SPLITTING																
	UNBUNDLED EXCHANGE ACCESS LOOP																
	2-WIRE ANALOG VOICE GRADE LOOP																
		2 Wire Analog Voice Grade Loop-Service Level 1-Line Splitting-Zone 1		1	UEPSR UEPSB	UEALS	14.94	37.92	17.62	23.56	5.32						
		2 Wire Analog Voice Grade Loop-Service Level 1-Line Splitting-Zone 1		1	UEPSR UEPSB	UEABS	14.94	37.92	17.62	23.56	5.32						
		2 Wire Analog Voice Grade Loop- Service Level 1-Line Splitting-Zone 2		2	UEPSR UEPSB	UEALS	21.39	37.92	17.62	23.56	5.32						
		2 Wire Analog Voice Grade Loop- Service Level 1-Line Splitting-Zone 2		2	UEPSR UEPSB	UEABS	21.39	37.92	17.62	23.56	5.32						
		2 Wire Analog Voice Grade Loop-Service Level 1-Line Splitting-Zone 3		3	UEPSR UEPSB	UEALS	26.72	37.92	17.62	23.56	5.32						

Pricing Schedule - South Carolina

CATEGORY	RATE ELEMENTS	Interim	Zone	BCS	USOC	RATES($) Rec	Nonrecurring First	Nonrecurring Add'l	Nonrecurring Disconnect First	Nonrecurring Disconnect Add'l	Svc Order Submitted Elec per LSR SOMEC	Svc Order Submitted Manually per LSR SOMAN	Incremental Charge - Manual Svc Order vs. Electronic-1st SOMAN	Incremental Charge - Manual Svc Order vs. Electronic-Add'l SOMAN	Incremental Charge - Manual Svc Order vs. Electronic-Disc 1st SOMAN	Incremental Charge - Manual Svc Order vs. Electronic-Disc Add'l SOMAN
													OSS Rates($)			
	2 Wire Analog Voice Grade Loop-Service Level 1-Line Splitting-Zone 3		3	UEPSR UEPSB	UEABS	26.72	37.92	17.62	23.56	5.32						
PHYSICAL COLLOCATION																
	Physical Collocation-2 Wire Cross Connects (Loop) for Line Splitting			UEPSR UEPSB	PE1LS	0.0341	12.32	11.83	6.04	5.45						
VIRTUAL COLLOCATION																
	Virtual Collocation-2 Wire Cross Connects (Loop) for Line Splitting			UEPSR UEPSB	VE1LS	0.0317	12.32	11.83	6.04	5.45						
UNBUNDLED DEDICATED TRANSPORT																
INTEROFFICE CHANNEL - DEDICATED TRANSPORT																
	Interoffice Channel - DS1 - per mile			U1TD1	1L5XX	0.3415										
	Interoffice Channel - DS1 - Facility Termination			U1TD1	U1TF1	77.14	89.47	81.99	16.39	14.48						
	Interoffice Channel - DS3 - per mile			U1TD3	1L5XX	8.02										
	Interoffice Channel - DS3 - Facility Termination			U1TD3	U1TF3	880.65	279.37	163.12	60.33	58.59						
UNBUNDLED DARK FIBER																
	Dark Fiber - Interoffice Transport, Per Four Fiber Strands, Per Route Mile Or Fraction Thereof			UDF	1L5DF	36.41										
	Dark Fiber - Interoffice Transport, Per Four Fiber Strands, Per Route Mile Or Fraction Thereof			UDF	UDF14		640.51	138.17	317.76	198.11						
HIGH CAPACITY UNBUNDLED LOCAL LOOF																
DS3/UNBUNDLED LOCAL LOOP - Stand Alone																
	DS3 Unbundled Local Loop - per mile			UE3	1L5ND	12.26										
	DS3 Unbundled Local Loop - Facility Termination			UE3	UE3PX	306.36	452.52	264.53	119.75	83.77						
ENHANCED EXTENDED LINK (EELs)																
Network Elements Used in Combinations																
	4-Wire Analog Voice Grade Loop in Combination - Zone 1		1	UNCVX	UEAL4	32.59	132.38	94.83	59.35	14.61						
	4-Wire Analog Voice Grade Loop in Combination - Zone 2		2	UNCVX	UEAL4	43.89	132.38	94.83	59.35	14.61						
	4-Wire Analog Voice Grade Loop in Combination - Zone 3		3	UNCVX	UEAL4	43.38	132.38	94.83	59.35	14.61						
	4-Wire DS1 Digital Loop in Combination - Zone 1		1	UNC1X	USLXX	79.51	253.03	157.89	44.80	11.73						
	4-Wire DS1 Digital Loop in Combination - Zone 2		2	UNC1X	USLXX	136.00	253.03	157.89	44.80	11.73						
	4-Wire DS1 Digital Loop in Combination - Zone 3		3	UNC1X	USLXX	229.15	253.03	157.89	44.80	11.73						
	DS3 Local Loop in combination - per mile			UNC3X	1L5ND	12.26										
	DS3 Local Loop in combination - Facility Termination			UNC3X	UE3PX	306.36	452.52	264.53	119.75	83.77						
	Interoffice Channel in combination - DS1 - per mile			UNC1X	1L5XX	0.3415										
	Interoffice Channel in combination - DS1 Facility Termination			UNC1X	U1TF1	77.14	89.47	81.99	16.39	14.48						
	Interoffice Channel in combination - DS3 - per mile			UNC3X	1L5XX	8.02										
	Interoffice Channel in combination - DS3 - Facility Termination			UNC3X	U1TF3	880.65	279.37	163.12	60.33	58.59						
ADDITIONAL NETWORK ELEMENTS																
Optional Features & Functions:																
	Clear Channel Capability Extended Frame Option - per DS1	I		U1TD1, UNC1X	CCOEF		0.00									
	Clear Channel Capability Super FrameOption - per DS1	I		U1TD1, UNC1X	CCOSF		0.00									
	Clear Channel Capability (SF/ESF) Option - Subsequent Activity - per DS1	I		U1TD1, UNC1X, USL	NRCCC		185.26	23.86	1.99	0.78						
	C-bit Parity Option - Subsequent Activity - per DS3	i		U1TD3, UE3, UNC3X	NRCC3		219.58	7.69	0.737	0.00						
	DS1/DS0 Channel System			UNC1X	MQ1	107.57	91.24	62.71	10.56	9.81						
	DS3/DS1Channel System			UNC3X	MQ3	144.02	178.54	94.18	33.33	31.90						
	Voice Grade COCI in combination			UNCVX	1D1VG	0.56	6.59	4.73								
	Voice Grade COCI - for 2W-SL2 & 4W Voice Grade Local Loop			UEA	1D1VG	0.56	6.59	4.73								
	DS1 COCI in combination			UNC1X	UC1D1	8.64	6.59	4.73								
	DS1 COCI - for Stand Alone Interoffice Channel			U1TD1	UC1D1	8.64	6.59	4.73								
	DS1 COCI - for DS1 Local Loop			USL, NTCD1	UC1D1	8.64	6.59	4.73								
	Wholesale - UNE, Switch-As-Is Conversion Charge			UNCVX, UNC1X, UNC3X, XDH1X, HFQC6, XDD2X, XDV6X	UNCCC		5.61	5.61								
	Unbundled Misc Rate Element, SNE SAI, Single Network Element - Switch As Is Non-recurring Charge, per circuit (LSR)			U1TVX, U1TD3, UDF, UE3	URESL		5.61	5.61	7.00	7.00						
	Unbundled Misc Rate Element, SNE SAI, Single Network Element - Switch As Is Non-recurring Charge, incremental charge per circuit on a spreadsheet			U1TVX, U1TD3, UDF, UE3	URESP		5.61	5.61	7.00	7.00						
Service Rearrangements																
	NRC - Order Coordination Specific Time - Dedicated Transport	I		UNC1X, UNC3X	OCOSR		18.90	18.90								
COMMINGLING																

Pricing Schedule - South Carolina

CATEGORY	RATE ELEMENTS	Interim	Zone	BCS	USOC	RATES($) Rec	Nonrecurring First	Nonrecurring Add'l	Nonrecurring Disconnect First	Nonrecurring Disconnect Add'l	Svc Order Submitted Elec per LSR	Svc Order Submitted Manually per LSR	Incremental Charge - Manual Svc Order vs. Electronic-1st	Incremental Charge - Manual Svc Order vs. Electronic-Add'l	Incremental Charge - Manual Svc Order vs. Electronic-Disc 1st	Incremental Charge - Manual Svc Order vs. Electronic-Disc Add'l
											OSS Rates($)					
											SOMEC	SOMAN	SOMAN	SOMAN	SOMAN	SOMAN
	Commingling Authorization			UNCVX,UNC1X, UNC3X, U1TD3, UE3, U1TVX	CMGAU	0.00	0.00	0.00	0.00	0.00						
	Commingled (UNE part of single bandwidth circuit)															
	Commingled VG COCI			XDV2X	1D1VG	0.56	6.59	4.73								
	Commingled 4-wire Local Loop Zone 1		1	XDV6X	UEAL4	32.59	132.38	94.83	59.35	14.61						
	Commingled 4-wire Local Loop Zone 2		2	XDV6X	UEAL4	43.89	132.38	94.83	59.35	14.61						
	Commingled 4-wire Local Loop Zone 3		3	XDV6X	UEAL4	43.38	132.38	94.83	59.35	14.61						
	Commingled DS1 COCI			XDH1X	UC1D1	8.64	6.59	4.73								
	Commingled DS1 Interoffice Channel			XDH1X	U1TF1	77.14	89.47	81.99	16.39	14.48						
	Commingled DS1 Interoffice Channel Mileage			XDH1X	1L5XX	0.3415										
	Commingled DS1/DS0 Channel System			XDH1X	MQ1	107.57	91.24	62.71	10.56	9.81						
	Commingled DS1 Local Loop Zone 1		1	XDH1X	USLXX	79.51	253.03	157.89	44.80	11.73						
	Commingled DS1 Local Loop Zone 2		2	XDH1X	USLXX	136.00	253.03	157.89	44.80	11.73						
	Commingled DS1 Local Loop Zone 3		3	XDH1X	USLXX	229.15	253.03	157.89	44.80	11.73						
	Commingled DS3 Local Loop			HFQC6	UE3PX	306.36	452.52	264.53	119.75	83.77						
	Commingled DS3~~/STS-1~~ Local Loop Mileage			HFQC6	1L5ND	12.26										
	Commingled DS3/DS1 Channel System			HFQC6	MQ3	144.02	178.54	94.18	33.33	31.90						
	Commingled DS3 Interoffice Channel			HFQC6	U1TF3	880.65	279.37	163.12	60.33	58.59						
	Commingled DS3 Interoffice Channel Mileage			HFQC6	1L5XX	8.02										
	UNE to Commingled Conversion Tracking			XDH1X, HFQC6	CMGUN	0.00	0.00	0.00	0.00	0.00						
	SPA to Commingled Conversion Tracking			XDH1X, HFQC6	CMGSP	0.00	0.00	0.00	0.00	0.00						
LNP Query Service																
	LNP Charge Per query					0.0008837										
	LNP Service Establishment Manual						25.09	25.09	23.07	23.07						
	LNP Service Provisioning with Point Code Establishment						594.82	303.88	269.53	198.18						
911 PBX LOCATE																
	911 PBX LOCATE DATABASE CAPABILITY															
	Service Establishment per CLEC per End User Account			9PBDC	9PBEU		1,813.00									
	Changes to TN Range or Customer Profile			9PBDC	9PBTN		181.40									
	Per Telephone Number (Monthly)			9PBDC	9PBMM	0.07										
	Change Company (Service Provider) ID			9PBDC	9PBPC		532.48									
	PBX Locate Service Support per CLEC (Monthlt)			9PBDC	9PBMR	181.29										
	Service Order Charge			9PBDC	9PBSC		15.69									
	911 PBX LOCATE TRANSPORT COMPONENT															
	See Att 3															
Emergency Number Services																
	911 trunk rates are included in the Facility cost via the General Subscriber Services Tariff (GSST) and the Switched Access Service Tariff.															
	Note: Rates displaying an "I" in Interim column are interim as a result of a Commission order.															
LOCAL INTERCONNECTION (CALL TRANSPORT AND TERMINATION)																
	NOTE: "bk" beside a rate indicates that the Parties have agreed to bill and keep for that element pursuant to the terms and conditions in Attachment 3.															
	TANDEM SWITCHING															
	Tandem Switching Function Per MOU					0.000736bk										
	Multiple Tandem Switching, per MOU (applies to intial tandem only)					0.000736										
	Local Intermediary Charge, per MOU (8/12/2006 - 12/31/2006)					0.00150										
	Local Intermediary Charge, per MOU (1/1/2007 - 12/31/2007)					0.00175										
	Local Intermediary Charge, per MOU (1/1/2008 - 12/31/2008)					0.00225										
	Local Intermediary Charge, per MOU (1/1/2009 - expiration)					0.00250										
	TRUNK CHARGE															
	Installation Trunk Side Service - per DS0			OHD	TPP6X		21.65bk	8.16bk								
	Installation Trunk Side Service - per DS0			OHD	TPP9X		21.65bk	8.16bk								
	Dedicated End Office Trunk Port Service-per DS0**			OHD	TDEOP	0.00										
	Dedicated End Office Trunk Port Service-per DS1**			OH1 OH1MS	TDE1P	0.00										
	Dedicated Tandem Trunk Port Service-per DS0**			OHD	TDWOP	0.00										
	Dedicated Tandem Trunk Port Service-per DS1**			OH1 OH1MS	TDW1P	0.00										
	**** This rate element is recovered on a per MOU basis and is included in the End Office Switching and Tandem Switching, per MOU rate elements**															
	COMMON TRANSPORT (Shared)															
	Common Transport - Per Mile, Per MOU					0.0000045bk										
	Common Transport - Facilities Termination Per MOU					0.0004095bk										
LOCAL INTERCONNECTION (DEDICATED TRANSPORT)																
	INTEROFFICE CHANNEL - DEDICATED TRANSPORT															
	Interoffice Channel - Dedicated Transport - 2-Wire Voice Grade - Per Mile per month			OHM	1L5NF	0.0167bk										

Pricing Schedule - South Carolina

CATEGORY	RATE ELEMENTS	Interim	Zone	BCS	USOC	RATES($)					Svc Order Submitted Elec per LSR	Svc Order Submitted Manually per LSR	Incremental Charge - Manual Svc Order vs. Electronic-1st	Incremental Charge - Manual Svc Order vs. Electronic-Add'l	Incremental Charge - Manual Svc Order vs. Electronic-Disc 1st	Incremental Charge - Manual Svc Order vs. Electronic-Disc Add'l
							Nonrecurring		Nonrecurring Disconnect				OSS Rates($)			
						Rec	First	Add'l	First	Add'l	SOMEC	SOMAN	SOMAN	SOMAN	SOMAN	SOMAN
	Interoffice Channel - Dedicated Transport- 2- Wire Voice Grade - Facility Termination per month			OHM	1L5NF	24.30bk	40.63bk	27.47bk	16.77bk	6.91bk						
	Interoffice Channel - Dedicated Transport - 56 kbps - per mile per month			OHM	1L5NK	0.0167bk										
	Interoffice Channel - Dedicated Transport - 56 kbps - Facility Termination per month			OHM	1L5NK	16.76bk	40.63bk	27.47bk	16.77bk	6.91bk						
	Interoffice Channel - Dedicated Transport - 64 kbps - per mile per month			OHM	1L5NK	0.0167bk										
	Interoffice Channel - Dedicated Transport - 64 kbps - Facility Termination per month			OHM	1L5NK	16.76bk	40.63bk	27.47bk	16.77bk	6.91bk						
	Interoffice Channel - Dedicated Channel - DS1 - Per Mile per month			OH1, OH1MS	1L5NL	0.3415bk										
	Interoffice Channel - Dedicated Tranport - DS1 - Facility Termination per month			OH1, OH1MS	1L5NL	77.14bk	89.47bk	81.99bk	16.39bk	14.48bk						
	Interoffice Channel - Dedicated Transport - DS3 - Per Mile per month			OH3, OH3MS	1L5NM	8.02bk										
	Interoffice Channel - Dedicated Transport - DS3 - Facility Termination per month			OH3, OH3MS	1L5NM	880.65bk	279.37bk	163.12bk	60.33bk	58.59bk						
	LOCAL CHANNEL - DEDICATED TRANSPORT															
	Local Channel - Dedicated - 2-Wire Voice Grade per month			OHM	TEFV2	15.33bk	193.53bk	33.24bk	36.72bk	3.21bk						
	Local Channel - Dedicated - 4-Wire Voice Grade per month			OHM	TEFV4	16.54bk	193.97bk	33.68bk	37.19bk	3.68bk						
	Local Channel - Dedicated - DS1 per month			OH1	TEFHG	42.62bk	177.87bk	154.06bk	22.24bk	15.30bk						
	Local Channel - Dedicated - DS3 Facility Termination per month			OH3	TEFHJ	446.00bk	452.52bk	264.53bk	119.75bk	83.77bk						
	LOCAL INTERCONNECTION MID-SPAN MEET															
	Local Channel - Dedicated - DS1 per month			OH1MS	TEFHG	0.00	0.00									
	Local Channel - Dedicated - DS3 per month			OH3MS	TEFHJ	0.00	0.00									
	MULTIPLEXERS															
	Channelization - DS1 to DS0 Channel System			OH1, OH1MS	SATN1	107.57bk	91.24bk	62.71bk	10.56bk	9.81bk						
	DS3 to DS1 Channel System per month			OH3, OH3MS	SATNS	144.02bk	178.54bk	94.18bk	33.33bk	31.90bk						
	DS3 Interface Unit (DS1 COCI) per month			OH1, OH1MS	SATCO	8.64bk	6.59bk	4.73bk								
SIGNALING (CCS7)																
	NOTE: "bk" beside a rate indicates that the Parties have agreed to bill and keep for that element pursuant to the terms and conditions in Attachment 3.															
	CCS7 Signaling Connection, Per 56Kbps Facility A-Link DS1			UDB	TPP6A	16.93bk	35.61bk	35.61bk	16.48bk	16.48bk						
	CCS7 Signaling Connection, Per 56Kbps Facility A-Link DS3			UDB	TPP9A	16.93bk	35.61bk	35.61bk	16.48bk	16.48bk						
	CCS7 Signaling Connection, Per 56Kbps Facility B-Link DS1			UDB	TPP6B	16.93bk	35.61bk	35.61bk	16.48bk	16.48bk						
	CCS7 Signaling Connection, Per 56Kbps Facility B-Link DS3			UDB	TPP9B	16.93bk	35.61bk	35.61bk	16.48bk	16.48bk						
	CCS7 Signaling Termination, Per STP Port			UDB	PT8SX	163.49bk										
	CCS7 Signaling Usage, Per TCAP Message					0.0000692bk										
	CCS7 Signaling Usage, Per ISUP Message					0.0000173bk										
	CCS7 Signaling Usage Surrogate, per link per LATA			UDB	STU56	791.37bk										
	CCS7 Signaling Point Code, per Originating Point Code Establishment or Change, per STP affected			UDB	CCAPO		29.08bk	29.08bk	35.65bk	35.65bk						
	CCS7 Signaling Point Code, per Destination Point Code Establishment or Change, Per Stp Affected			UDB	CCAPD		29.08bk	29.08bk	35.65bk	35.65bk						
	CCS7 Signaling Connection, Switched access service, interface groups, transmissiom paths 6 DS1 level path with bit stream signaling			UDB	TPP6X	16.93bk	35.61bk	35.61bk	16.48bk	16.48bk						
	CCS7 Signaling Connection, Switched access service, interface groups, transmissiom paths 9 DS3 level path with bit stream signaling			UDB	TPP9X	16.93bk	35.61bk	35.61bk	16.48bk	16.48bk						
	Notes: If no rate is identified in the contract, the rates, terms, and conditions for the specific service or function will be as set forth in applicable AT&T tariff.															
PHYSICAL COLLOCATION																
	Application															
	Physical Collocation - Initial Application Fee			CLO	PE1BA		1,883.67		0.51							
	Physical Collocation - Subsequent Application Fee			CLO	PE1CA		1,570.10		0.51							
	Physical Collocation - Co-Carrier Cross Connects/Direct Connect, Application Fee, per application			CLO	PE1DT		584.42									
	Physical Collocation Administrative Only - Application Fee			CLO	PE1BL		743.66									
	Physical Collocation - Application Cost, Simple Augment			CLO	PE1KS		594.27		1.21							
	Physical Collocation - Application Cost, Minor Augment			CLO	PE1KM		833.26		1.21							
	Physical Collocation - Application Cost, Intermediate Augment			CLO	PE1K1		1,058.00		1.21							
	Physical Collocation - Application Cost - Major Augment			CLO	PE1KJ		2,409.00		1.21							
	Space Preparation															
	Physical Collocation - Floor Space, per sq feet			CLO	PE1PJ	3.95										

Pricing Schedule - South Carolina

CATEGORY	RATE ELEMENTS	Interim	Zone	BCS	USOC	RATES($)					Svc Order Submitted Elec per LSR	Svc Order Submitted Manually per LSR	Incremental Charge - Manual Svc Order vs. Electronic-1st	Incremental Charge - Manual Svc Order vs. Electronic-Add'l	Incremental Charge - Manual Svc Order vs. Electronic-Disc 1st	Incremental Charge - Manual Svc Order vs. Electronic-Disc Add'l
						Rec	Nonrecurring		Nonrecurring Disconnect		OSS Rates($)					
							First	Add'l	First	Add'l	SOMEC	SOMAN	SOMAN	SOMAN	SOMAN	SOMAN
	Physical Collocation - Space Enclosure, welded wire, first 50 square feet			CLO	PE1BX	197.69										
	Physical Collocation - Space enclosure, welded wire, first 100 square feet			CLO	PE1BW	219.19										
	Physical Collocation - Space enclosure, welded wire, each additional 50 square feet			CLO	PE1CW	21.50										
	Physical Collocation - Space Preparation - C.O. Modification per square ft.			CLO	PE1SK	2.75										
	Physical Collocation - Space Preparation, Common Systems Modifications-Cageless, per square foot			CLO	PE1SL	3.24										
	Physical Collocation - Space Preparation - Common Systems Modifications-Caged, per cage			CLO	PE1SM	110.16										
	Physical Collocation - Space Preparation - Firm Order Processing			CLO	PE1SJ		602.05									
	Physical Collocation - Space Availability Report, per Central Office Requested			CLO	PE1SR		1,077.57									
Power																
	Physical Collocation - Power, -48V DC Power - per Fused Amp Requested			CLO	PE1PL	9.19										
	Physical Collocation - Power, -48V DC Power, Grandfathered Site, per Fused Amp Requested			CLO	PE1FT	3.77										
	Physical Collocation - Power, -48V DC Power, Measured AC Usage, per Used Amp, per Power Feed ("A" or "B" Feed)			CLO	PE1FU	3.35										
	Physical Collocation - Power, -48V DC Power, Infrastructure Capital and Expense Costs, per Fused Amp Requested			CLO	PE1FV	6.95										
	Physical Collocation - Power, -48V DC Power, Grandfathered Site, Infrastructure Expense Costs, per Fused Amp Requested			CLO	PE1FW	1.53										
	Physical Collocation - Power, -48V DC Power, Meter Reading - per CLEC per CO, First 12 Circuits w/BST Meter			CLO	PE1FO	102.24										
	Physical Collocation - Power, -48V DC Power, Meter Reading - per CLEC per CO, per Each Additional 2 Circuits w/BST Meter			CLO	PE1FP	8.94										
	Physical Collocation - Power, -48V DC Power, Meter Reading - per CLEC per CO, First 12 Circuits w/CLEC Meter			CLO	PE1FQ	98.25										
	Physical Collocation - Power, -48V DC Power, Meter Reading - per CLEC per CO, per Each Additional 2 Circuits w/CLEC Meter			CLO	PE1FR	8.94										
	Physical Collocation - Power, -48V DC Power, Additional Meter Reading Trip Charge, per Central Office per Occurrence			CLO	PE1FM		307.64									
	Physical Collocation - Power, 120V AC Power, Single Phase, per Breaker Amp			CLO	PE1FB	5.67										
	Physical Collocation - Power, 240V AC Power, Single Phase, per Breaker Amp			CLO	PE1FD	11.36										
	Physical Collocation - Power, 120V AC Power, Three Phase, per Breaker Amp			CLO	PE1FE	17.03										
	Physical Collocation - Power, 277V AC Power, Three Phase, per Breaker Amp			CLO	PE1FG	39.33										
Cross Connects (Cross Connects, Co-Carrier Cross Connects, and Ports)																
	Physical Collocation - 2-wire cross-connect, loop, provisioning			UEANL,UEQ, UNCNX, UEA, UCL, UAL, UHL, UDN, UNCVX	PE1P2	0.0341	12.32	11.83	6.04	5.45						
	Physical Collocation - 4-wire cross-connect, loop, provisioning			UEA, UHL, UNCVX, UNCDX, UCL, UDL	PE1P4	0.0682	12.42	11.90	6.40	5.74						
	Physical Collocation -DS1 Cross-Connect for Physical Collocation, provisioning			WDS1L, WDS1S, UXTD1, ULDD1, USLEL, UNLD1, U1TD1, UNC1X, UEPSR, UEPSB, UEPSE, UEPSP, USL, UEPEX, UEPDX	PE1P1	1.12	22.08	15.96	6.42	5.80						

Pricing Schedule - South Carolina

CATEGORY	RATE ELEMENTS	Interim	Zone	BCS	USOC	RATES($) Rec	Nonrecurring First	Nonrecurring Add'l	Nonrecurring Disconnect First	Nonrecurring Disconnect Add'l	Svc Order Submitted Elec per LSR	Svc Order Submitted Manually per LSR	Incremental Charge - Manual Svc Order vs. Electronic-1st	Incremental Charge - Manual Svc Order vs. Electronic-Add'l	Incremental Charge - Manual Svc Order vs. Electronic-Disc 1st	Incremental Charge - Manual Svc Order vs. Electronic-Disc Add'l
											OSS Rates($)					
											SOMEC	SOMAN	SOMAN	SOMAN	SOMAN	SOMAN
	Physical Collocation - DS3 Cross-Connect, provisioning			UE3, U1TD3, UXTD3, UXTS1, UNC3X, UNCSX, ULDD3, U1TS1, ULDS1, UNLD3, UEPEX, UEPDX, UEPSR, UEPSB, UEPSE, UEPSP	PE1P3	14.21	20.94	15.23	7.39	5.93						
	Physical Collocation - 2-Fiber Cross-Connect			CLO, ULDO3, ULD12, ULD48, U1TO3, U1T12, U1T48, UDLO3, UDL12, UDF	PE1F2	2.82	20.94	15.23	7.40	5.93						
	Physical Collocation - 4-Fiber Cross-Connect			ULDO3, ULD12, ULD48, U1TO3, U1T12, U1T48, UDLO3, UDL12, UDF, UDFCX	PE1F4	5.01	25.61	19.90	9.73	8.26						
	Physical Collocation - Co-Carrier Cross Connects/Direct Connect - Fiber Cable Support Structure, per linear foot, per cable.			CLO	PE1ES	0.001										
	Physical Collocation - Co-Carrier Cross Connect/Direct Connect - Copper/Coax Cable Support Structure, per linear foot, per cable.			CLO	PE1DS	0.0015										
	Physical Collocation 2-Wire Cross Connect, Port			UEPSR, UEPSP, UEPSE, UEPSB, UEPSX, UEP2C	PE1R2	0.0341	12.32	11.83	6.04	5.45		15.69				
	Physical Collocation 4-Wire Cross Connect, Port			UEPEX, UEPDD	PE1R4	0.0682	12.42	11.90	6.40	5.74		15.69				
Security																
	Physical Collocation - Security Escort for Basic Time - normally scheduled work, per half hour			CLO	PE1BT		16.96	10.75								
	Physical Collocation - Security Escort for Overtime - outside of normally scheduled working hours on a scheduled work day, per half hour			CLO	PE1OT		22.10	13.89								
	Physical Collocation - Security Escort for Premium Time - outside of scheduled work day, per half hour			CLO	PE1PT		27.23	17.02								
	Physical Collocation - Security Access System, Security System, per Central Office			CLO	PE1AX	74.72										
	Physical Collocation -Security Access System - New Card Activation, per Card Activation (First), per State			CLO	PE1A1	0.0601	27.85									
	Physical Collocation-Security Access System-Administrative Change, existing Access Card, per Request, per State, per Card			CLO	PE1AA		7.81									
	Physical Collocation - Security Access System - Replace Lost or Stolen Card, per Card			CLO	PE1AR		22.83									
	Physical Collocation - Security Access - Initial Key, per Key			CLO	PE1AK		13.13									
	Physical Collocation - Security Access - Key, Replace Lost or Stolen Key, per Key			CLO	PE1AL		13.13									
CFA																
	Physical Collocation - CFA Information Resend Request, per premises, per arrangement, per request			CLO	PE1C9		77.71									
Cable Records - Note: The rates in the First & Additional columns will actually be billed as "Initial I" and "Subsequent S" respectively																
	Physical Collocation - Cable Records, per request			CLO	PE1CR		I 760.98	S 489.20	133.29							
	Physical Collocation, Cable Records, VG/DS0 Cable, per cable record (maximum 3600 records)			CLO	PE1CD		327.65		189.54							
	Physical Collocation, Cable Records, VG/DS0 Cable, per each 100 pair			CLO	PE1CO		4.82		5.91							
	Physical Collocation, Cable Records, DS1, per T1 TIE			CLO	PE1C1		2.26		2.77							
	Physical Collocation, Cable Records, DS3, per T3 TIE			CLO	PE1C3		7.90		9.68							
	Physical Collocation - Cable Records, Fiber Cable, per cable record (maximum 99 records)			CLO	PE1CB		84.68		77.30							
	Physical Collocation, Cable Records,CAT5/RJ45			CLO	PE1C5		2.26		2.77							
Virtual to Physical																
	Physical Collocation - Virtual to Physical Collocation Relocation, per Voice Grade Circuit			CLO	PE1BV		33.00									

Pricing Schedule - South Carolina

CATEGORY	RATE ELEMENTS	Interim	Zone	BCS	USOC	RATES($)					Svc Order Submitted Elec per LSR	Svc Order Submitted Manually per LSR	Incremental Charge - Manual Svc Order vs. Electronic-1st	Incremental Charge - Manual Svc Order vs. Electronic-Add'l	Incremental Charge - Manual Svc Order vs. Electronic-Disc 1st	Incremental Charge - Manual Svc Order vs. Electronic-Disc Add'l
							Nonrecurring		Nonrecurring Disconnect		OSS Rates($)					
						Rec	First	Add'l	First	Add'l	SOMEC	SOMAN	SOMAN	SOMAN	SOMAN	SOMAN
	Physical Collocation - Virtual to Physical Collocation Relocation, per DSO Circuit			CLO	PE1BO		33.00									
	Physical Collocation - Virtual to Physical Collocation Relocation, per DS1 Circuit			CLO	PE1B1		52.00									
	Physical Collocation - Virtual to Physical Collocation Relocation, per DS3 Circuit			CLO	PE1B3		52.00									
	Physical Collocation - Virtual to Physical Collocation In-Place, Per Voice Grade Circuit			CLO	PE1BR		22.43									
	Physical Collocation Virtual to Physical Collocation In-Place, Per DSO Circuit			CLO	PE1BP		22.43									
	Physical Collocation - Virtual to Physical Collocation In-Place, Per DS1 Circuit			CLO	PE1BS		32.61									
	Physical Collocation - Virtual to Physical Collocation In-Place, per DS3 Circuit			CLO	PE1BE		32.61									
Entrance Cable																
	Physical Collocation - Fiber Cable Installation, Pricing, non-recurring charge, per Entrance Cable			CLO	PE1BD		794.22		22.54							
	Physical Collocation - Fiber Cable Support Structure, per Entrance Cable			CLO	PE1PM	21.33										
	Physical Collocation - Fiber Entrance Cable Installation, per Fiber			CLO	PE1ED		3.87									
VIRTUAL COLLOCATION																
Application																
	Virtual Collocation - Application Fee			AMTFS	EAF		1,207.95		0.51							
	Virtual Collocation - Co-Carrier Cross Connects/Direct Connect, Application Fee, per application			AMTFS	VE1CA		584.42									
	Virtual Collocation Administrative Only - Application Fee			AMTFS	VE1AF		743.66									
Space Preparation																
	Virtual Collocation - Floor Space, per sq. ft.			AMTFS	ESPVX	3.95										
Power																
	Virtual Collocation - Power, per fused amp			AMTFS	ESPAX	9.19										
Cross Connects (Cross Connects, Co-Carrier Cross Connects, and Ports)																
	Virtual Collocation - 2-wire cross-connect, loop, provisioning			UEANL, UEA, UDN, UAL, UHL, UCL, UEQ, UNCVX, UNCDX, UNCNX	UEAC2	0.0317	12.32	11.83	6.04	5.45						
	Virtual Collocation - 4-wire cross-connect, loop, provisioning			UEA, UHL, UCL, UDL, UNCVX, UNCDX	UEAC4	0.0634	12.42	11.90	6.40	5.74						
	Virtual collocation - Special Access & UNE,cross-connect per DS1			ULR, UXTD1, UNC1X, ULDD1, U1TD1, USLEL, UNLD1, USL, UEPEX, UEPDX	CNC1X	1.12	22.08	15.96	6.42	5.80						
	Virtual collocation - Special Access & UNE, cross-connect per DS3			USL, UE3, U1TD3, UXTS1, UXTD3, UNC3X, UNCSX, ULDD3, U1TS1, ULDS1, ULDSX, UNLD3, XDEST	CND3X	14.21	20.94	15.23	7.39	5.93						
	Virtual Collocation - 2-Fiber Cross Connects			UDL12, UDLO3, U1T48, U1T12, U1TO3, ULDO3, ULD12, ULD48, UDF	CNC2F	2.86	20.94	15.23	7.40	5.93						
	Virtual Collocation - 4-Fiber Cross Connects			UDL12, UDLO3, U1T48, U1T12, U1TO3, ULDO3, ULD12, ULD48, UDF	CNC4F	5.71	25.61	19.90	9.73	8.26						
	Virtual Collocation - Co-Carrier Cross Connects/Direct Connect - Fiber Cable Support Structure, per linear foot, per cable			AMTFS	VE1CB	0.001										
	Virtual Collocation - Co-Carrier Cross Connects/Direct Connect - Copper/Coax Cable Support Structure, per linear foot, per cable			AMTFS	VE1CD	0.0015										

Pricing Schedule - South Carolina

CATEGORY	RATE ELEMENTS	Interim	Zone	BCS	USOC	RATES($)					Svc Order Submitted Elec per LSR	Svc Order Submitted Manually per LSR	Incremental Charge - Manual Svc Order vs. Electronic-1st	Incremental Charge - Manual Svc Order vs. Electronic-Add'l	Incremental Charge - Manual Svc Order vs. Electronic-Disc 1st	Incremental Charge - Manual Svc Order vs. Electronic-Disc Add'l
							Nonrecurring		Nonrecurring Disconnect		OSS Rates($)					
						Rec	First	Add'l	First	Add'l	SOMEC	SOMAN	SOMAN	SOMAN	SOMAN	SOMAN
	Virtual Collocation 2-Wire Cross Connect, Port			UEPSX, UEPSB, UEPSE, UEPSP, UEPSR, UEP2C	VE1R2	0.0317	12.32	11.83	6.04	5.45						
	Virtual Collocation 4-Wire Cross Connect, Port			UEPDD, UEPEX	VE1R4	0.0634	12.42	11.90	6.40	5.74						
CFA																
	Virtual Collocation - CFA Information Resend Request, per Premises, per Arrangement, per request			AMTFS	VE1QR		77.71									
Cable Records - Note: The rates in the First & Additional columns will actually be billed as "Initial I" & "Subsequent S" respectively																
	Virtual Collocation Cable Records - per request			AMTFS	VE1BA		I 760.98	S 489.20	133.29							
	Virtual Collocation Cable Records - VG/DS0 Cable, per cable record			AMTFS	VE1BB		327.65		189.54							
	Virtual Collocation Cable Records - VG/DS0 Cable, per each 100 pair			AMTFS	VE1BC		4.82		5.91							
	Virtual Collocation Cable Records - DS1, per T1TIE			AMTFS	VE1BD		2.26		2.77							
	Virtual Collocation Cable Records - DS3, per T3TIE			AMTFS	VE1BE		7.90		9.68							
	Virtual Collocation Cable Records - Fiber Cable, per 99 fiber records			AMTFS	VE1BF		84.68		77.30							
	Virtual Collocation Cable Records - CAT 5/RJ45			AMTFS	VE1B5		2.26		2.77							
Security																
	Virtual collocation - Security escort, basic time, normally scheduled work hours			AMTFS	SPTBX		16.96	10.75								
	Virtual collocation - Security escort, overtime, outside of normally scheduled work hours on a normal working day			AMTFS	SPTOX		22.10	13.89								
	Virtual collocation - Security escort, premium time, outside of a scheduled work day			AMTFS	SPTPX		27.23	17.02								
Maintenance																
	Virtual collocation - Maintenance in CO - Basic, per half hour			AMTFS	CTRLX		27.99	10.75								
	Virtual collocation - Maintenance in CO - Overtime, per half hour			AMTFS	SPTOM		36.56	13.89								
	Virtual collocation - Maintenance in CO - Premium per half hour			AMTFS	SPTPM		45.12	17.02								
Entrance Cable																
	Virtual Collocation - Cable Installation Charge, per cable			AMTFS	ESPCX		794.22		22.54							
	Virtual Collocation - Cable Support Structure, per cable			AMTFS	ESPSX	18.66										
COLLOCATION IN THE REMOTE SITE																
Physical Remote Site Collocation																
	Physical Collocation in the Remote Site - Application Fee			CLORS	PE1RA		308.38		168.60							
	Cabinet Space in the Remote Site per Bay/ Rack			CLORS	PE1RB	246.44										
	Physical Collocation in the Remote Site - Security Access - Key			CLORS	PE1RD		13.13									
	Physical Collocation in the Remote Site - Space Availability Report per Premises Requested			CLORS	PE1SR		116.13									
	Physical Collocation in the Remote Site - Remote Site CLLI Code Request, per CLLI Code Requested			CLORS	PE1RE		37.64									
	Remote Site DLEC Data (BRSDD), per Compact Disk, per CO			CLORS	PE1RR		234.50									
	Physical Collocation - Security Escort for Basic Time - normally scheduled work, per half hour			CLORS	PE1BT		16.96	10.75								
	Physical Collocation - Security Escort for Overtime - outside of normally scheduled working hours on a scheduled work day, per half hour			CLORS	PE1OT		22.10	13.89								
	Physical Collocation - Security Escort for Premium Time - outside of scheduled work day, per half hour			CLORS	PE1PT		27.23	17.02								
Adjacent Remote Site Collocation																
	Remote Site-Adjacent Collocation-Application Fee			CLORS	PE1RU		755.62	755.62								
	Remote Site-Adjacent Collocation - Real Estate, per square foot			CLORS	PE1RT	0.134										
	Remote Site-Adjacent Collocation - AC Power, per breaker amp			CLORS	PE1RS	6.27										
NOTE: If Security Escort and/or Add'l Engineering Fees become necessary for adjacent remote site collocation, the Parties will negotiate appropriate rates.																
Virtual Remote Site Collocation																
	Virtual Collocation in the Remote Site - Application Fee			VE1RS	VE1RB		616.76		337.19							
	Virtual Collocation in the Remote Site - Per Bay/Rack of Space			VE1RS	VE1RC	246.44										
	Virtual Collocation in the Remote Site - Space Availability Report per Premises requested			VE1RS	VE1RR		232.25									

Pricing Schedule - South Carolina

CATEGORY	RATE ELEMENTS	Interim	Zone	BCS	USOC	RATES($)					Svc Order Submitted Elec per LSR	Svc Order Submitted Manually per LSR	Incremental Charge - Manual Svc Order vs. Electronic-1st	Incremental Charge - Manual Svc Order vs. Electronic-Add'l	Incremental Charge - Manual Svc Order vs. Electronic-Disc 1st	Incremental Charge - Manual Svc Order vs. Electronic-Disc Add'l
							Nonrecurring		Nonrecurring Disconnect				OSS Rates($)			
						Rec	First	Add'l	First	Add'l	SOMEC	SOMAN	SOMAN	SOMAN	SOMAN	SOMAN
	Virtual Collocation in the Remote Site - Remote Site CLLI Code Request, per CLLI Code Requested			VE1RS	VE1RL		75.27									
ADJACENT COLLOCATION																
	Adjacent Collocation - Space Charge per Sq. Ft.			CLOAC	PE1JA	0.0939										
	Adjacent Collocation - Electrical Facility Charge per Linear Ft.			CLOAC	PE1JC	6.40										
	Adjacent Collocation - 2-Wire Cross-Connects			UEANL,UEQ,UEA,UCL, UAL, UHL, UDN	PE1JE	0.0264	12.32	11.83	6.04	5.45						
	Adjacent Collocation - 4-Wire Cross-Connects			UEA,UHL,UDL,UCL	PE1JF	0.0527	12.42	11.90	6.40	5.74						
	Adjacent Collocation - DS1 Cross-Connects			USL	PE1JG	1.03	22.08	15.96	6.42	5.80						
	Adjacent Collocation - DS3 Cross-Connects			UE3	PE1JH	14.00	20.94	15.23	7.39	5.93						
	Adjacent Collocation - 2-Fiber Cross-Connect			CLOAC	PE1JJ	2.37	20.94	15.23	7.40	5.93						
	Adjacent Collocation - 4-Fiber Cross-Connect			CLOAC	PE1JK	4.53	25.61	19.90	9.73	8.26						
	Adjacent Collocation - Application Fee			CLOAC	PE1JB		1,580.20									
	Adjacent Collocation - 120V, Single Phase Standby Power Rate per AC Breaker Amp			CLOAC	PE1JL	5.67										
	Adjacent Collocation - 240V, Single Phase Standby Power Rate per AC Breaker Amp			CLOAC	PE1JM	11.36										
	Adjacent Collocation - 120V, Three Phase Standby Power Rate per AC Breaker Amp			CLOAC	PE1JN	17.03										
	Adjacent Collocation - 277V, Three Phase Standby Power Rate per AC Breaker Amp			CLOAC	PE1JO	39.33										
DIRECTORY DELIVERY																
	Each subscriber will receive one (1) copy per primary End User listing of AT&T White Pages directory in the same manner and at the same time that they are delivered to AT&T's subscribers during the annual delivery of newly published directories.															
BRANDING - DIRECTORY ASSISTANCE																
Facility Based CLEC																
	Recording and Provisioning of DA Custom Branded Announcement			AMT	CBADA		3,000.00	3,000.00								
	Loading of Custom Branded Announcement per Switch per OCN			AMT	CBADC		1,170.00	1,170.00								
Wholesale CLEC																
	Recording of DA Custom Branded Announcement						3,000.00	3,000.00								
	Loading of DA Custom Branded Announcement per Switch per OCN						1,170.00	1,170.00								
Unbranding via OLNS for Wholesale CLEC																
	Loading of DA per OCN (1 OCN per Order)						420.00	420.00								
	Loading of DA per Switch per OCN						16.00	16.00								
DIRECTORY ASSISTANCE SERVICES																
DIRECTORY ASSISTANCE ACCESS SERVICE																
	Directory Assistance Access Service Calls, Charge Per Call					0.31										
DIRECTORY ASSISTANCE CALL COMPLETION ACCESS SERVICE (DACC)																
	Directory Assistance Call Completion Access Service (DACC), Per Call Attempt					0.10										
	Directory Assistance - Rate Reference Initial Load						5,000.00									
	Directory Assistance - Rate Reference Subsequent Load							1,500.00								
Directory Assistance Database Service (DADS)																
	Directory Assistance Database Service (DADS)-Initial Load, per listing						0.04									
	Directory Assistance Database Service (DADS)-Update, per listing					0.04										
	Directory Assistance Database Servuce (DADS)-Monthly Recurring Fee					150.00										
BRANDING - OPERATOR CALL PROCESSING																
Facility based CLEC																
	Recording of Custom Branded OA Announcement			AMT	CBAOS		7,000.00	7,000.00								
	Loading of Custom Branded OA Announcement per shelf/NAV per OCN			AMT	CBAOL		500.00	500.00								
Wholesale CLEC																
	Recording of Custom Branded OA Announcement						7,000.00	7,000.00								

Pricing Schedule - South Carolina

CATEGORY	RATE ELEMENTS	Interim	Zone	BCS	USOC	RATES($)					Svc Order Submitted Elec per LSR	Svc Order Submitted Manually per LSR	Incremental Charge - Manual Svc Order vs. Electronic-1st	Incremental Charge - Manual Svc Order vs. Electronic-Add'l	Incremental Charge - Manual Svc Order vs. Electronic-Disc 1st	Incremental Charge - Manual Svc Order vs. Electronic-Disc Add'l
							Nonrecurring		Nonrecurring Disconnect		OSS Rates($)					
						Rec	First	Add'l	First	Add'l	SOMEC	SOMAN	SOMAN	SOMAN	SOMAN	SOMAN
	Loading of Custom Branded OA Announcement per shelf/NAV per OCN						500.00	500.00								
	Loading of OA Custom Branded Announcement per Switch per OCN						1,170.00	1,170.00								
	Unbranding via OLNS for Wholesale CLEC															
	Loading of OA per OCN (Regional)						1,200.00	1,200.00								
INWARD OPERATOR SERVICES																
	Inward Operator Services - Verification, Per Minute					1.15										
	Inward Operator Services - Verification and Emergency Interrupt - Per Minute					1.15										
OPERATOR CALL PROCESSING																
	Oper. Call Processing - Oper. Provided, Per Min. - Using BST LIDB					1.20										
	Oper. Call Processing - Oper. Provided, Per Min. - Using Foreign LIDB					1.24										
	Oper. Call Processing - Fully Automated, per Call - Using BST LIDB					0.20										
	Oper. Call Processing - Fully Automated, per Call - Using Foreign LIDB					0.20										
	Operator Services - Rate Reference Initial Load						5,000.00									
	Operator Services - Rate Reference Subsequent Load							1,500.00								
STRUCTURE ACCESS																
	NOTE: Urban and non-urban are defined by the Bureau of Census as follows: Urban is a city plus the closely-settled urban fringe that together have a minimum population of 50,000. Non-urban is less than 50,000. **Conduit rates will apply to each passageway (innerduct).** **For the purpose of determining the Duct feet chargeable, the Duct considered occupied shall be measured from the center to center of adjacent Manhole(s), or from the center of a Manhole to the end of a Duct not terminated in a Manhole.** **The rates are not applicable for crossings of any navigable waterway. Rates for navigable waterway crossings will be calculated on an individual case basis.**															
	Poles & Ducts - Poles ($/attachment/yr.) NON-URBAN					4.92										
	Poles & Ducts - Poles ($/attachment/yr.) URBAN					3.27										
	Poles & Ducts - Per Foot Conduit Occupancy Fees Full Duct ($/ft/yr.)					0.29										
	Pole Attachment Transfer Rate					41.00										
	Cable Rate					2.16										
BONA FIDE REQUEST																
	Deposit						2000.00									

AT&T Wholesale Amendment

Contract Number: 10293

Amendment to the Agreements
Between
NuVox Communications, Inc. d/b/a NuVox and
BellSouth Telecommunications, Inc. d/b/a AT&T Alabama dated May 18, 2001, AT&T Florida dated March 11, 2006, AT&T Georgia dated April 30, 2007, AT&T Kentucky dated January 3, 2010, AT&T Louisiana dated May 18, 2001, AT&T Mississippi dated August 20, 2007, AT&T North Carolina dated March 11, 2006, AT&T South Carolina dated November 17, 2009 and AT&T Tennessee dated November 21, 2009

Pursuant to this Amendment, (the "Amendment"), NuVox Communications, Inc. d/b/a NuVox ("NuVox"), and BellSouth Telecommunications, Inc. d/b/a AT&T Alabama, AT&T Florida, AT&T Georgia, AT&T Kentucky, AT&T Louisiana, AT&T Mississippi, AT&T North Carolina, AT&T South Carolina and AT&T Tennessee (hereinafter referred to collectively as "AT&T"), hereby agree to amend those certain Interconnection Agreements between the Parties dated May 18, 2001 in Alabama, March 11, 2006 in Florida, April 30, 2007 in Georgia, January 3, 2010 in Kentucky, May 18, 2001 in Louisiana, August 20, 2007 in Mississippi, March 11, 2006 in North Carolina, November 17, 2009 in South Carolina and November 21, 2009 in Tennessee ("Agreements") to be effective 10 (ten) days after the date of the last signature executing the Amendment ("Effective Date") For the purposes of this Amendment, "Parties" shall mean "NuVox" and "AT&T".

In consideration of the mutual provisions contained herein and other good and valuable consideration, the receipt and sufficiency of which are hereby acknowledged, the Parties hereby covenant and agree as follows:

1. Recitals and Terms. The foregoing Recitals are incorporated by this reference herein and each Party is entitled to rely on them for purposes of this Amendment. All capitalized terms not defined herein shall have the meaning described in the Parties' Interconnection Agreement. The word "including" shall have the same meaning as "including but not limited to".

2. The Parties hereby agree to modify the Agreements as follows:

   (a) For Alabama: delete Sections 1.6, 1.6.1, 1.6.2, 1.6.3, 1.7, 1.8, 5.2.7, 5.2.7.1, 5.2.7.2, 5.2.7.3, 5.2.7.4, 5.2.8 and 5.2.9 (from August 11, 2006 Alabama Generic Change of Law Amendment, Exhibit A), and renumber Section 1.8 as 1.12 (in August 11, 2006 Alabama Generic Change of Law Amendment, Exhibit A);

   (b) For Florida: delete Sections 2.2.5, 2.2.6, 2.2.6.1, 2.2.6.2, 2.2.6.3, 2.2.7, 2.2.7.1, 2.2.7.2, 2.2.7.3, 6.2.7, 6.2.8, 6.2.8.1, 6.2.8.2, 6.2.8.3, 6.2.8.4, 6.2.9, 6.2.12, 6.2.12.1, 6.2.12.2 and 6.2.12.3 (from Attachment 2), and renumber 6.2.10 and 6.2.11 as 6.2.7 and 6.2.8, respectively (in Attachment 2);

   (c) For Georgia: delete Sections 2.2.4.7, 2.2.4.7.3, 2.2.4.7.4, 2.2.4.7.5, 6.1.3.7, 6.1.3.10, 6.1.3.11, 6.1.3.12 and 6.1.3.14 (from Attachment 2) and renumber 2.2.4.7.1, 2.2.4.7.2, 6.1.3.8 and 6.1.3.9 as 2.2.4.7, 2.2.4.8, 6.1.3.7 and 6.1.3.8, respectively (in Attachment 2);

(d) For Kentucky: delete Sections 2.2.6, 2.2.6.1, 2.2.6.2, 2.2.6.3, 6.2.5, 6.2.6, 6.2.7, 6.2.8 and 6.2.9; and renumber Section 2.2.6.4 as 2.2.12;

(e) For Louisiana: delete Sections 1.6, 1.6.1, 1.7, 1.8, 1.9, 4.2.7, 4.2.7.1, 4.2.7.2, 4.2.8, 4.2.9 and 4.2.10 (from Louisiana Generic Change of Law Amendment, Exhibit A NuVox executed on January 20, 2010), and renumber Sections 1.10 and 4.2.11 as 1.12 and 4.2.13, respectively (from Louisiana Generic Change of Law Amendment, Exhibit A NuVox executed on January 20, 2010);

(f) For Mississippi: delete Sections 2.2.6, 2.2.6.1, 2.2.6.2, 2.2.6.3, 6.2.10, 6.2.11, 6.2.12, 6.2.13 and 6.2.14 (from Attachment 2), and renumber Sections 2.2.7 and 6.2.15 as 2.2.12 and 6.2.16, respectively (in Attachment 2);

(g) For North Carolina: delete Sections 2.2.6, 2.2.6.1, 2.2.6.2, 2.2.6.3, 2.2.7, 2.2.8, 2.2.9, 6.2.8, 6.2.8.1, 6.2.8.2, 6.2.8.3, 6.2.8.4, 6.2.11, 6.2.12 and 6.2.13 (from Attachment 2), and renumber 2.2.10, 6.2.9 and 6.2.10 as 2.2.16, 6.2.8 and 6.2.9 respectively (in Attachment 2);

(h) For South Carolina: delete Sections 2.2.6, 2.2.6.1, 2.2.6.2, 2.2.6.3, 6.2.9, 6.2.10, 6.2.11, 6.2.12 and 6.2.13, and renumber Sections 2.2.6.4 and 6.2.14 as 2.2.12 and 6.2.11, respectively (from Attachment 2);

(i) For Tennessee: delete Sections 2.2.6, 2.2.6.1, 2.2.6.2, 2.2.6.3, 6.2.9, 6.2.10, 6.2.11, 6.2.12 and 6.2.13, and renumber Sections 2.2.6.4 and 6.2.14 as 2.2.12 and 6.2.11 respectively (from Attachment 2).

3. "Execution Date" shall be defined as the date that this amendment is signed by AT&T.

4. The Parties hereby agree to add the following Sections to the Agreements:

A.[1] Disconnection or Conversion of Non-Impaired DS1 and DS3 Loops

A.1[2] Identification of Non-Impaired DS1 and DS3 Loops and Excess DS1 and DS3 Loops

A.2[3] The List. Within thirty (30) days of the Execution Date, AT&T will provide a list to NuVox of all active Non-Impaired DS1 and DS3 Loops, Excess DS1 and DS3 Loops in Alabama, Florida, Kentucky, Louisiana, Mississippi, North Carolina,

[1] This Section shall become Section 1.6 in Alabama, 2.2.5 in Florida, 2.2.4.9 in Georgia, 2.2.6 in Kentucky, 1.6 in Louisiana, 2.2.6 in Mississippi, 2.2.6 in North Carolina, 2.2.6 in South Carolina, and 2.2.6 in Tennessee.

[2] This Section shall become Section 1.6.1 in Alabama, 2.2.5.1 in Florida, 2.2.4.9.1 in Georgia, 2.2.6.1 in Kentucky, 1.6.1 in Louisiana, 2.2.6.1 in Mississippi, 2.2.6.1 in North Carolina, 2.2.6.1 in South Carolina, and 2.2.6.1 in Tennessee.

[3] This Section shall become Section 1.6.2 in Alabama, 2.2.5.2 in Florida, 2.2.4.9.2 in Georgia, 2.2.6.2 in Kentucky, 1.6.2 in Louisiana, 2.2.6.2 in Mississippi, 2.2.6.2 in North Carolina, 2.2.6.2 in South Carolina, and 2.2.6.2 in Tennessee.

South Carolina, and Tennessee, and 271 Elements in Georgia ("List") remaining in service as of the Execution Date. Notwithstanding the foregoing sentence, such List shall not contain more than (a) 250 DS1 UNE Loops (including EEL components), (b) 20 DS3 UNE Loops (including EEL components), (c) 250 DS1 271 Loops (including EEL components), and (d) 20 DS3 271 Loops (including EEL components).[4]

A.3[5] Subsequent Lists. In the event that AT&T identifies within six (6) months after the Execution Date any additional Non-Impaired DS1 and DS3 Loops, Excess DS1 and DS3 Loops and/or 271 Elements not included on the List, AT&T shall provide to NuVox a subsequent list identifying such circuit(s) ("Subsequent List"), provided that the number of circuits on such Subsequent List(s) shall not individually or in the aggregate (including circuits identified on the List) exceed the circuit-type quantity limitations set forth in Section A.2.

B[6] Disconnect or Conversion Orders

B.1[7] NuVox Orders. NuVox will submit orders (using AT&T worksheet format) to disconnect or convert all circuits properly included on the List or a Subsequent List to another AT&T wholesale service within thirty (30) days of receipt of the List or Subsequent List.

B.2[8] AT&T Orders. Should NuVox fail to submit conversion or disconnect orders within the thirty (30) days for a circuit properly included on the List or a Subsequent List, AT&T shall be entitled to convert such circuit to special access without an order from NuVox.

C[9] True-Ups

---

[4] The List is a single list that shall include: (a) no more than 250 DS1-level circuits, regardless of whether they are UNE loops (including EEL components) or UNE dedicated transport (including EEL components); (b) no more than 20 DS3-level circuits, regardless of whether they are UNE loops (including EEL components) or UNE dedicated transport (including EEL components); (c) no more than 250 271 DS1-level circuits, regardless of whether they are 271 loops (including EEL components) or 271 dedicated transport (including EEL components); and (d) no more than 20 271 DS3-level circuits, regardless of whether they are 271 loops (including EEL components) or 271 dedicated transport (including EEL components).

[5] This Section shall become Section 1.6.3 in Alabama, 2.2.5.3 in Florida, 2.2.4.9.3 in Georgia, 2.2.6.3 in Kentucky, 1.6.3 in Louisiana, 2.2.6.3 in Mississippi, 2.2.6.3 in North Carolina, 2.2.6.3 in South Carolina, and 2.2.6.3 in Tennessee.

[6] This Section shall become Section 1.7 in Alabama, 2.2.6 in Florida, 2.2.4.10 in Georgia, 2.2.7 in Kentucky, 1.7 in Louisiana, 2.2.7 in Mississippi, 2.2.7 in North Carolina, 2.2.7 in South Carolina, and 2.2.7 in Tennessee.

[7] This Section shall become Section 1.7.1 in Alabama, 2.2.6.1 in Florida, 2.2.4.10.1 in Georgia, 2.2.7.1 in Kentucky, 1.7.1 in Louisiana, 2.2.7.1 in Mississippi, 2.2.7.1 in North Carolina, 2.2.7.1 in South Carolina, and 2.2.7.1 in Tennessee.

[8] This Section shall become Section 1.7.2 in Alabama, 2.2.6.2 in Florida, 2.2.4.10.2 in Georgia, 2.2.7.2 in Kentucky, 1.7.2 in Louisiana, 2.2.7.2 in Mississippi, 2.2.7.2 in North Carolina, 2.2.7.2 in South Carolina, and 2.2.7.2 in Tennessee.

[9] This Section shall become Section 1.8 in Alabama, 2.2.7 in Florida, 2.2.4.11 in Georgia, 2.2.8 in Kentucky, 1.8 in Louisiana, 2.2.8 in Mississippi, 2.2.8 in North Carolina, 2.2.8 in South Carolina, and 2.2.8 in Tennessee.

C.1[10] Standard True-Up Period (for NuVox Orders). Notwithstanding any other provision of this Agreement, for circuits properly included on the List or a Subsequent List and converted or disconnected pursuant to Section B.1, AT&T is entitled to a true-up for the period between the date six (6) months prior to the date of AT&T's furnishing of the List or Subsequent List, as applicable, to NuVox, or the circuit installation date, whichever date is later, and the date of NuVox's submission to AT&T of a disconnect or conversion order ("Standard True-Up Period").

C.2[11] Alternative True-Up Period (for AT&T Orders). Notwithstanding any other provision of this Settlement Agreement, for circuits properly included on the List, or a Subsequent List and converted pursuant to Section B.2, AT&T is entitled to a true-up for the period between the date six months prior to the date of AT&T's furnishing of the List or Subsequent List as applicable, to NuVox, or the circuit installation date, whichever date is later, and the date of conversion ("Alternative True-Up Period").

C.3[12] True-Up Amounts. The amount of the true-up for each circuit shall be the difference between each applicable state commission approved DS1 or DS3 Loop rate and the FCC month-to-month special access rate in the States of Alabama, Florida, Kentucky, Louisiana, Mississippi, North Carolina, South Carolina and Tennessee for the True-Up Period. In Georgia, the amount of the true-up shall be limited to the difference between each applicable state commission approved 271 Element rate and the FCC month-to-month special access rate unless the circuit during the true-up period was billed as TELRIC then the True-Up amount will be the difference between TELRIC and FCC month-to-month special access.

C.4[13] Standard Completion and Potential True-Up Forfeiture (for NuVox Orders). AT&T shall complete all disconnects and conversions ordered pursuant to Section B.1 within ninety (90) days of the date of NuVox's order. Should AT&T fail to complete all disconnects and conversions within such time and issue complete invoices for the true-up amounts specified in this Section to NuVox

---

[10] This Section shall become Section 1.8.1 in Alabama, 2.2.7.1 in Florida, 2.2.4.11.1 in Georgia, 2.2.8.1 in Kentucky, 1.8.1 in Louisiana, 2.2.8.1 in Mississippi, 2.2.8.1 in North Carolina, 2.2.8.1 in South Carolina, and 2.2.8.1 in Tennessee.

[11] This Section shall become Section 1.8.2 in Alabama, 2.2.7.2 in Florida, 2.2.4.11.2 in Georgia, 2.2.8.2 in Kentucky, 1.8.2 in Louisiana, 2.2.8.2 in Mississippi, 2.2.8.2 in North Carolina, 2.2.8.2 in South Carolina, and 2.2.8.2 in Tennessee.

[12] This Section shall become Section 1.8.3 in Alabama, 2.2.7.3 in Florida, 2.2.4.11.3 in Georgia, 2.2.8.3 in Kentucky, 1.8.3 in Louisiana, 2.2.8.3 in Mississippi, 2.2.8.3 in North Carolina, 2.2.8.3 in South Carolina, and 2.2.8.3 in Tennessee.

[13] This Section shall become Section 1.8.4 in Alabama, 2.2.7.4 in Florida, 2.2.4.11.4 in Georgia, 2.2.8.4 in Kentucky, 1.8.4 in Louisiana, 2.2.8.4 in Mississippi, 2.2.8.4 in North Carolina, 2.2.8.4 in South Carolina, and 2.2.8.4 in Tennessee.

within two (2) billing periods after the date of completion of a disconnection or conversion, it shall forfeit and not be entitled to any true-up for such circuit(s).

D[14] Additional Non-Impaired DS1 and DS3 Loops. It is expected by all Parties that NuVox will comply with the FCC rules for ordering DS1 and DS3 Loops only in impaired areas and where regulations permit. For any Non-Impaired DS1 and DS3 Loops, Excess DS1 and DS3 Loops and/or 271 Elements not included on the List or a Subsequent List, orders for disconnection or conversion shall be placed by NuVox (or by AT&T, if NuVox fails to place such orders within thirty (30) days of being notified by AT&T of any additional Non-Impaired DS1 and DS3 Loops). True-ups for such circuits shall be limited to those circuits installed after the Execution Date. Such circuits will be subject to the true-up periods and amounts specified in Sections C.1, C.2 and C.3, subject to the completion and potential true-up forfeiture provisions set forth in Section C.4.

E[15] Non-Recurring Charges. Notwithstanding any other provision of this Agreement, for Non-Impaired DS1 and DS3 Loops converted to special access, AT&T will be entitled to a Commission–approved switch-as-is conversion charge (no UNE disconnect or other non-recurring charges of any kind shall apply).

F[16] Application of Special Access Rates

F.1[17] Disconnected Circuits. Except as expressly provided for in the true-up provisions set forth in this Section, special access rates shall not apply to any circuit disconnected pursuant to this Section.

F.2[18] Converted Circuits. Except as expressly provided for in the true-up provisions set forth in this Section, special access rates shall not apply to any circuit converted to special access pursuant to this Section prior to the date upon which the conversion is completed.

---

[14] This Section shall become Section 1.9 in Alabama, 2.2.8 in Florida, 2.2.4.12 in Georgia, 2.2.9 in Kentucky, 1.9 in Louisiana, 2.2.9 in Mississippi, 2.2.9 in North Carolina, 2.2.9 in South Carolina, and 2.2.9 in Tennessee.

[15] This Section shall become Section 1.10 in Alabama, 2.2.9 in Florida, 2.2.4.13 in Georgia, 2.2.10 in Kentucky, 1.10 in Louisiana, 2.2.10 in Mississippi, 2.2.10 in North Carolina, 2.2.10 in South Carolina, and 2.2.10 in Tennessee.

[16] This Section shall become Section 1.11 in Alabama, 2.2.10 in Florida, 2.2.4.14 in Georgia, 2.2.11 in Kentucky, 1.11 in Louisiana, 2.2.11 in Mississippi, 2.2.11 in North Carolina, 2.2.11 in South Carolina, and 2.2.11 in Tennessee.

[17] This Section shall become Section 1.11.1 in Alabama, 2.2.10.1 in Florida, 2.2.4.14.1 in Georgia, 2.2.11.1 in Kentucky, 1.11.1 in Louisiana, 2.2.11.1 in Mississippi, 2.2.11.1 in North Carolina, 2.2.11.1 in South Carolina, and 2.2.11.1 in Tennessee.

[18] This Section shall become Section 1.11.2 in Alabama, 2.2.10.2 in Florida, 2.2.4.14.2 in Georgia, 2.2.11.2 in Kentucky, 1.11.2 in Louisiana, 2.2.11.2 in Mississippi, 2.2.11.2 in North Carolina, 2.2.11.2 in South Carolina, and 2.2.11.2 in Tennessee.

F.3[19] Inclusion of Converted Circuits in Special Access Discount Plans. For any circuits converted to AT&T special access pursuant to this Section, NuVox shall be entitled to designate such circuits for inclusion in an ACP or any other available discount plan by amending the ACP or any other available discount plan pursuant to the terms thereof. No non-recurring charges shall apply in connection with the inclusion of the circuits in the ACP or any other available discount plan.

G[20] Disconnection or Conversion of Non-Impaired DS1 and DS3 Dedicated Transport Including DS1 and DS3 Entrance Facilities

G.1[21] Identification of Non-Impaired DS1 and DS3 Dedicated Transport, Embedded Base Entrance Facilities and Excess DS1 and DS3 Dedicated Transport

G.2[22] The List. Within thirty (30) days of the Effective Date, AT&T will provide the List to NuVox with all active Non-Impaired DS1 and DS3 Dedicated Transport, Excess DS1 and DS3 Dedicated Transport in Alabama, Florida, Kentucky, Louisiana, Mississippi, North Carolina, South Carolina, and Tennessee, and 271 Elements in Georgia remaining in service as of the Effective Date. Notwithstanding the foregoing sentence, such List shall not contain more than (a) 250 DS1 Dedicated Transport (including EELs or EEL components, and Entrance Facilities), (b) 20 DS3 Dedicated Transport (including EELs or EEL components, and Entrance Facilities), (c) 250 DS1 271 Dedicated Transport (including EELs or EEL components, and Entrance Facilities), and (d) 20 DS3 271 Dedicated Transport (including EELs or EEL components, and Entrance Facilities). [23]

---

[19] This Section shall become Section 1.11.3 in Alabama, 2.2.10.3 in Florida, 2.2.4.14.3 in Georgia, 2.2.11.3 in Kentucky, 1.11.3 in Louisiana, 2.2.11.3 in Mississippi, 2.2.11.3 in North Carolina, 2.2.11.3 in South Carolina, and 2.2.11.3 in Tennessee.

[20] This Section shall become Section 5.2.7 in Alabama, 6.2.9 in Florida, 6.1.3.9 in Georgia, 6.2.5 in Kentucky, 4.2.7 in Louisiana, 6.2.10 in Mississippi, 6.2.10 in North Carolina, 6.2.9 in South Carolina, and 6.2.9 in Tennessee.

[21] This Section shall become Section 5.2.7.1 in Alabama, 6.2.9.1 in Florida, 6.1.3.9.1 in Georgia, 6.2.5.1 in Kentucky, 4.2.7.1 in Louisiana, 6.2.10.1 in Mississippi, 6.2.10.1 in North Carolina, 6.2.9.1 in South Carolina, and 6.2.9.1 in Tennessee.

[22] This Section shall become Section 5.2.7.2 in Alabama, 6.2.9.2 in Florida, 6.1.3.9.2 in Georgia, 6.2.5.2 in Kentucky, 4.2.7.2 in Louisiana, 6.2.10.2 in Mississippi, 6.2.10.2 in North Carolina, 6.2.9.2 in South Carolina, and 6.2.9.2 in Tennessee.

[23] The List is a single list that shall include: (a) no more than 250 DS1-level circuits, regardless of whether they are UNE loops (including EEL components) or UNE dedicated transport (including EEL components); (b) no more than 20 DS3-level circuits, regardless of whether they are UNE loops (including EEL components) or UNE dedicated transport (including EEL components); (c) no more than 250 271 DS1-level circuits, regardless of whether they are 271 loops (including EEL components) or 271 dedicated transport (including EEL components); and (d) no more than 20 271 DS3-level circuits, regardless of whether they are 271 loops (including EEL components) or 271 dedicated transport (including EEL components).

G.3[24] Subsequent Lists. In the event that AT&T identifies within six (6) months after the Execution Date any additional Non-Impaired DS1 and DS3 Dedicated Transport, Excess DS1 and DS3 Dedicated Transport and/or 271 Elements not included on the List, AT&T shall provide to NuVox a subsequent list identifying such circuit(s) ("Subsequent List"), provided that the number of circuits on such Subsequent List(s) shall not individually or in the aggregate (including circuits identified on the List) exceed the circuit-type quantity limitations set forth in Section G.2.

H[25] Disconnect or Conversion Orders

H.1[26] NuVox Orders. NuVox will submit orders (using AT&T worksheet format) to disconnect or convert all circuits properly included on the List or a Subsequent List to another AT&T wholesale service within thirty (30) days of receipt of the List or Subsequent List.

H.2[27] AT&T Orders. Should NuVox fail to submit conversion or disconnect orders within the thirty (30) days for a circuit properly included on the List or a Subsequent List, AT&T shall be entitled to convert such circuit to special access without an order from NuVox.

I[28] True-Ups

I.1[29] Standard True-Up Period (for NuVox Orders). Notwithstanding any other provision of this Agreement, for circuits properly included on the List or a Subsequent List and converted or disconnected pursuant to Section H.1, AT&T is entitled to a true-up for the period between the date six (6) months prior to the date of AT&T's furnishing of the List or Subsequent List, as applicable, to NuVox, or the circuit installation date, whichever date is later, and the date of NuVox's

---

[24] This Section shall become Section 5.2.7.3 in Alabama, 6.2.9.3 in Florida, 6.1.3.9.3 in Georgia, 6.2.5.3 in Kentucky, 4.2.7.3 in Louisiana, 6.2.10.3 in Mississippi, 6.2.10.3 in North Carolina, 6.2.9.3 in South Carolina, and 6.2.9.3 in Tennessee.

[25] This Section shall become Section 5.2.8 in Alabama, 6.2.10 in Florida, 6.1.3.10 in Georgia, 6.2.6 in Kentucky, 4.2.8 in Louisiana, 6.2.11 in Mississippi, 6.2.11 in North Carolina, 6.2.10 in South Carolina, and 6.2.10 in Tennessee.

[26] This Section shall become Section 5.2.8.1 in Alabama, 6.2.10.1 in Florida, 6.1.3.10.1 in Georgia, 6.2.6.1 in Kentucky, 4.2.8.1 in Louisiana, 6.2.11.1 in Mississippi, 6.2.11.1 in North Carolina, 6.2.10.1 in South Carolina, and 6.2.10.1 in Tennessee.

[27] This Section shall become Section 5.2.8.2 in Alabama, 6.2.10.2 in Florida, 6.1.3.10.2 in Georgia, 6.2.6.2 in Kentucky, 4.2.8.2 in Louisiana, 6.2.11.2 in Mississippi, 6.2.11.2 in North Carolina, 6.2.10.2 in South Carolina, and 6.2.10.2 in Tennessee.

[28] This Section shall become Section 5.2.9 in Alabama, 6.2.11 in Florida, 6.1.3.11 in Georgia, 6.2.7 in Kentucky, 4.2.9 in Louisiana, 6.2.12 in Mississippi, 6.2.12 in North Carolina, 6.2.11 in South Carolina, and 6.2.11 in Tennessee.

[29] This Section shall become Section 5.2.9.1 in Alabama, 6.2.11.1 in Florida, 6.1.3.11.1 in Georgia, 6.2.7.1 in Kentucky, 4.2.9.1 in Louisiana, 6.2.12.1 in Mississippi, 6.2.12.1 in North Carolina, 6.2.11.1 in South Carolina, and 6.2.11.1 in Tennessee.

submission to AT&T of a disconnect or conversion order ("Standard True-Up Period").

I.2[30] Alternative True-Up Period (for AT&T Orders). Notwithstanding any other provision of this Settlement Agreement, for circuits properly included on the List, or a Subsequent List and converted pursuant to Section H.2, AT&T is entitled to a true-up for the period between the date six months prior to the date of AT&T's furnishing of the List or Subsequent List as applicable, to NuVox, or the circuit installation date, whichever date is later, and the date of conversion ("Alternative True-Up Period").

I.3[31] True-Up Amounts. The amount of the true-up for each circuit shall be the difference between each applicable state commission approved DS1 or DS3 Dedicated Transport rate and the FCC month-to-month special access rate in the States of Alabama, Florida, Kentucky, Louisiana, Mississippi, North Carolina, South Carolina and Tennessee for the True-Up Period. In Georgia, the amount of the true-up shall be limited to the difference between each applicable state commission approved 271 Element rate and the FCC month-to-month special access rate unless the circuit during the true-up period was billed as TELRIC then the True-Up amount will be the difference between TELRIC and FCC month-to-month special access.

I.4[32] Standard Completion and Potential True-Up Forfeiture (for NuVox Orders). AT&T shall complete all disconnects and conversions ordered pursuant to Section H.1 within ninety (90) days of the date of NuVox's order. Should AT&T fail to complete all disconnects and conversions within such time and issue complete invoices for the true-up amounts specified in this Section to NuVox within two (2) billing periods after the date of completion of a disconnection or conversion, it shall forfeit and not be entitled to any true-up for such circuit(s).

J[33] Additional Non-Impaired DS1 and DS3 Dedicated Transport. It is expected by all Parties that NuVox will comply with the FCC rules for ordering DS1 and DS3 Dedicated Transport only in impaired areas and where regulations permit. For any Non-Impaired DS1 and DS3 Dedicated Transport, Embedded Entrance Facilities, Excess DS1 and DS3 Dedicated Transport and/or 271 Elements not

---

[30] This Section shall become Section 5.2.9.2 in Alabama, 6.2.11.2 in Florida, 6.1.3.11.2 in Georgia, 6.2.7.2 in Kentucky, 4.2.9.2 in Louisiana, 6.2.12.2 in Mississippi, 6.2.12.2 in North Carolina, 6.2.11.2 in South Carolina, and 6.2.11.2 in Tennessee.

[31] This Section shall become Section 5.2.9.3 in Alabama, 6.2.11.3 in Florida, 6.1.3.11.3 in Georgia, 6.2.7.3 in Kentucky, 4.2.9.3 in Louisiana, 6.2.12.3 in Mississippi, 6.2.12.3 in North Carolina, 6.2.11.3 in South Carolina, and 6.2.11.3 in Tennessee.

[32] This Section shall become Section 5.2.9.4 in Alabama, 6.2.11.4 in Florida, 6.1.3.11.4 in Georgia, 6.2.7.4 in Kentucky, 4.2.9.4 in Louisiana, 6.2.12.4 in Mississippi, 6.2.12.4 in North Carolina, 6.2.11.4 in South Carolina, and 6.2.11.4 in Tennessee.

[33] This Section shall become Section 5.2.10 in Alabama, 6.2.12 in Florida, 6.1.3.12 in Georgia, 6.2.8 in Kentucky, 4.2.10 in Louisiana, 6.2.13 in Mississippi, 6.2.13 in North Carolina, 6.2.12 in South Carolina, and 6.2.12 in Tennessee.

included on the List or a Subsequent List, orders for disconnection or conversion shall be placed by NuVox (or by AT&T, if NuVox fails to place such orders within thirty (30) days of being notified by AT&T of any additional Non-Impaired DS1 and DS3 Dedicated Transport). True-ups for such circuits shall be limited to those circuits installed after the Execution Date. Such circuits will be subject to the true-up periods and amounts specified in Sections I.1, I.2, and I.3, subject to the completion and potential true-up forfeiture provisions set forth in Section.

K[34] Non-Recurring Charges. Notwithstanding any other provision of this Agreement, for Non-Impaired DS1 and DS3 Loops converted to special access, AT&T will be entitled to a Commission–approved switch-as-is conversion charge (no UNE disconnect or other non-recurring charges of any kind shall apply).

L[35] Application of Special Access Rates

L.1[36] Disconnected Circuits. Except as expressly provided for in the true-up provisions set forth in this Section, special access rates shall not apply to any circuit disconnected pursuant to this Section.

L.2[37] Converted Circuits. Except as expressly provided for in the true-up provisions set forth in this Section, special access rates shall not apply to any circuit converted to special access pursuant to this Section prior to the date upon which the conversion is completed.

L.3[38] Inclusion of Converted Circuits in Special Access Discount Plans. For any circuits converted to AT&T special access pursuant to this Section, NuVox shall be entitled to designate such circuits for inclusion in an ACP or any other available discount plan by amending the ACP or any other available discount plan pursuant to the terms thereof. No non-recurring charges shall apply in connection with the inclusion of the circuits in the ACP or any other available discount plan.

---

[34] This Section shall become Section 5.2.11 in Alabama, 6.2.13 in Florida, 6.1.3.13 in Georgia, 6.2.9 in Kentucky, 4.2.11 in Louisiana, 6.2.14 in Mississippi, 6.2.14 in North Carolina, 6.2.13 in South Carolina, and 6.2.13 in Tennessee.

[35] This Section shall become Section 5.2.12 in Alabama, 6.2.14 in Florida, 6.1.3.14 in Georgia, 6.2.10 in Kentucky, 4.2.12 in Louisiana, 6.2.15 in Mississippi, 6.2.15 in North Carolina, 6.2.14 in South Carolina, and 6.2.14 in Tennessee.

[36] This Section shall become Section 5.2.12.1 in Alabama, 6.2.14.1 in Florida, 6.1.3.14.1 in Georgia, 6.2.10.1 in Kentucky, 4.2.12.1 in Louisiana, 6.2.15.1 in Mississippi, 6.2.15.1 in North Carolina, 6.2.14.1 in South Carolina, and 6.2.14.1 in Tennessee.

[37] This Section shall become Section 5.2.12.2 in Alabama, 6.2.14.2 in Florida, 6.1.3.14.2 in Georgia, 6.2.10.2 in Kentucky, 4.2.12.2 in Louisiana, 6.2.15.2 in Mississippi, 6.2.15.2 in North Carolina, 6.2.14.2 in South Carolina, and 6.2.14.2 in Tennessee.

[38] This Section shall become Section 5.2.12.3 in Alabama, 6.2.14.2 in Florida, 6.1.3.14.3 in Georgia, 6.2.10.3 in Kentucky, 4.2.12.3 in Louisiana, 6.2.15.3 in Mississippi, 6.2.15.3 in North Carolina, 6.2.14.3 in South Carolina, and 6.2.14.3 in Tennessee.

5. All of the other provisions of the Agreements shall remain in full force and effect. By signing this Amendment, neither Party waives any rights it may have under the Agreement, and each Party expressly reserves its rights to argue any position it may deem reasonable pursuant to the Agreements as amended hereby. Either or both of the Parties are authorized to submit this Amendment to the respective state regulatory authorities for approval subject to Section 252(e) of the Federal Telecommunications Act of 1996.

NuVox Communications, Inc. d/b/a NuVox

By:

Name: Riley M. Murphy

Title: General Counsel

Date: 1/26/10

BellSouth Telecommunications Inc, d/b/a AT&T Alabama, AT&T Florida, AT&T Georgia, AT&T Kentucky, AT&T Louisiana, AT&T Mississippi, AT&T North Carolina, AT&T South Carolina and AT&T Tennessee by AT&T Operations, Inc., its authorized agent

By:

Name: Eddie A. Reed, Jr.

Title: Director-Interconnection Agreements

Date: 2-3-10

AT&T Wholesale Amendment

Contract Number: 10294

AMENDMENT TO THE AGREEMENT BETWEEN NUVOX COMMUNICATIONS, INC. AND BELLSOUTH TELECOMMUNICATIONS, INC. d/b/a AT&T SOUTH CAROLINA

This Amendment (the "Amendment") amends the Interconnection Agreement by and between BellSouth Telecommunications, Inc. d/b/a AT&T South Carolina ("AT&T") and Nuvox Communications, Inc. ("CLEC"). AT&T and CLEC are hereinafter referred to collectively as the "Parties" and individually as a "Party".

WHEREAS, AT&T and CLEC are Parties to an Interconnection Agreement under Sections 251 and 252 of the Communications Act of 1934, as amended (the "Act"), effective November 16, 2009, and as subsequently amended (the "Agreement"); and

WHEREAS, Nuvox Communications, Inc. was a party to a merger, and as a result changed its name to Windstream Nuvox, Inc., and shall be applicable in the State of South Carolina; and

WHEREAS, the Parties desire to amend the Interconnection Agreement to correct the corporate entity name and notice contact information for CLEC;

WHEREAS, the Parties wish to add USOC URETL and associated COS and rates to the Pricing Schedule;

NOW, THEREFORE, in consideration of the promises and mutual agreements set forth herein, the Parties agree to amend the Agreement as follows:

1. The name of Nuvox Communications, Inc. in the Interconnection Agreement is hereby deleted throughout the Interconnection Agreement and replaced with Windstream Nuvox, Inc.

2. The Parties agree to remove the CLEC Notice Contact in Section 24.1 of the General Terms and Conditions of the Agreement and replace it with the following Notice Contact:

   Mary Conquest
   Staff Manager – Interconnection
   Windstream Nuvox, Inc.
   2 North Main Street
   Greenville, SC 29601
   Phone: (864) 331-8252
   Fax: (864) 672 – 5019

3. Class of Service UEF and UEANL and USOC URETL and associated rates are added to the South Carolina Pricing Schedule, as illustrated in Exhibit 1, attached hereto and incorporated herein.

4. EXCEPT AS MODIFIED HEREIN, ALL OTHER TERMS AND CONDITIONS OF THE UNDERLYING AGREEMENT SHALL REMAIN UNCHANGED AND IN FULL FORCE AND EFFECT.

5. This Amendment shall not modify or extend the Effective Date or Term of the underlying Agreement, but rather, shall be coterminous with such Agreement.
6. This Amendment shall be filed with and is subject to approval by the Commission and shall become effective 10 days after the date of last signature executing this amendment.

Windstream NuVox, Inc.

By: Michael D. Rhoda

Printed: Michael D. Rhoda

Title: SVP - Government Affairs
(Print or Type)

Date: 1/7/11

BellSouth Telecommunications, Inc. d/b/a AT&T South Carolina by AT&T Services, Inc., its authorized agent

By: Patrick R. Doherty

Printed: Patrick Doherty

Title: Director Regulatory
(Print or Type)

Date: 1/17/11

	Resale OCN	ULEC OCN	CLEC OCN
SOUTH CAROLINA			

ACNA - _____

Attachment	State	Product	Rate Element Description	COS (Class of Service)	USOC	Non-Recurring Charge (NRC) First	Non-Recurring Charge (NRC) Additional
2	SC	UNBUNDLED EXCHANGE ACCESS LOOP	2-Wire Analog Voice Grade Loop - Loop Tagging - Service Level 1	UEF, UEANL	URETL	$ 8.95	$ 0.88